AUTHENTICATED
U.S. GOVERNMENT
INFORMATION
GPO

code of federal regulations

Protection of Environment

40

PART 86

Revised as of July 1, 1998

CONTAINING
A CODIFICATION OF DOCUMENTS
OF GENERAL APPLICABILITY
AND FUTURE EFFECT

AS OF JULY 1, 1998

With Ancillaries

Published by
the Office of the Federal Register
National Archives and Records
Administration

as a Special Edition of
the Federal Register

U.S. GOVERNMENT PRINTING OFFICE
WASHINGTON : 1998

For sale by U.S. Government Printing Office
Superintendent of Documents, Mail Stop: SSOP, Washington, DC 20402–9328

Table of Contents

	Page
Explanation	v
Title 40:	
Chapter I—Environmental Protection Agency	3
Finding Aids:	
Material Approved for Incorporation by Reference	1091
Table of CFR Titles and Chapters	1093
Alphabetical List of Agencies Appearing in the CFR	1111
Table of OMB Control Numbers	1121
List of CFR Sections Affected	1141

Cite this Code: CFR

To cite the regulations in this volume use title, part and section number. Thus, 40 CFR 86.1 *refers to title 40, part 86, section 1.*

Explanation

The Code of Federal Regulations is a codification of the general and permanent rules published in the Federal Register by the Executive departments and agencies of the Federal Government. The Code is divided into 50 titles which represent broad areas subject to Federal regulation. Each title is divided into chapters which usually bear the name of the issuing agency. Each chapter is further subdivided into parts covering specific regulatory areas.

Each volume of the Code is revised at least once each calendar year and issued on a quarterly basis approximately as follows:

Title 1 through Title 16.....as of January 1
Title 17 through Title 27.....as of April 1
Title 28 through Title 41.....as of July 1
Title 42 through Title 50.....as of October 1

The appropriate revision date is printed on the cover of each volume.

LEGAL STATUS

The contents of the Federal Register are required to be judicially noticed (44 U.S.C. 1507). The Code of Federal Regulations is prima facie evidence of the text of the original documents (44 U.S.C. 1510).

HOW TO USE THE CODE OF FEDERAL REGULATIONS

The Code of Federal Regulations is kept up to date by the individual issues of the Federal Register. These two publications must be used together to determine the latest version of any given rule.

To determine whether a Code volume has been amended since its revision date (in this case, July 1, 1998), consult the ''List of CFR Sections Affected (LSA),'' which is issued monthly, and the ''Cumulative List of Parts Affected,'' which appears in the Reader Aids section of the daily Federal Register. These two lists will identify the Federal Register page number of the latest amendment of any given rule.

EFFECTIVE AND EXPIRATION DATES

Each volume of the Code contains amendments published in the Federal Register since the last revision of that volume of the Code. Source citations for the regulations are referred to by volume number and page number of the Federal Register and date of publication. Publication dates and effective dates are usually not the same and care must be exercised by the user in determining the actual effective date. In instances where the effective date is beyond the cutoff date for the Code a note has been inserted to reflect the future effective date. In those instances where a regulation published in the Federal Register states a date certain for expiration, an appropriate note will be inserted following the text.

OMB CONTROL NUMBERS

The Paperwork Reduction Act of 1980 (Pub. L. 96–511) requires Federal agencies to display an OMB control number with their information collection request.

Many agencies have begun publishing numerous OMB control numbers as amendments to existing regulations in the CFR. These OMB numbers are placed as close as possible to the applicable recordkeeping or reporting requirements.

OBSOLETE PROVISIONS

Provisions that become obsolete before the revision date stated on the cover of each volume are not carried. Code users may find the text of provisions in effect on a given date in the past by using the appropriate numerical list of sections affected. For the period before January 1, 1986, consult either the List of CFR Sections Affected, 1949–1963, 1964–1972, or 1973–1985, published in seven separate volumes. For the period beginning January 1, 1986, a ''List of CFR Sections Affected'' is published at the end of each CFR volume.

INCORPORATION BY REFERENCE

What is incorporation by reference? Incorporation by reference was established by statute and allows Federal agencies to meet the requirement to publish regulations in the Federal Register by referring to materials already published elsewhere. For an incorporation to be valid, the Director of the Federal Register must approve it. The legal effect of incorporation by reference is that the material is treated as if it were published in full in the Federal Register (5 U.S.C. 552(a)). This material, like any other properly issued regulation, has the force of law.

What is a proper incorporation by reference? The Director of the Federal Register will approve an incorporation by reference only when the requirements of 1 CFR part 51 are met. Some of the elements on which approval is based are:

(a) The incorporation will substantially reduce the volume of material published in the Federal Register.

(b) The matter incorporated is in fact available to the extent necessary to afford fairness and uniformity in the administrative process.

(c) The incorporating document is drafted and submitted for publication in accordance with 1 CFR part 51.

Properly approved incorporations by reference in this volume are listed in the Finding Aids at the end of this volume.

What if the material incorporated by reference cannot be found? If you have any problem locating or obtaining a copy of material listed in the Finding Aids of this volume as an approved incorporation by reference, please contact the agency that issued the regulation containing that incorporation. If, after contacting the agency, you find the material is not available, please notify the Director of the Federal Register, National Archives and Records Administration, Washington DC 20408, or call (202) 523–4534.

CFR INDEXES AND TABULAR GUIDES

A subject index to the Code of Federal Regulations is contained in a separate volume, revised annually as of January 1, entitled CFR INDEX AND FINDING AIDS. This volume contains the Parallel Table of Statutory Authorities and Agency Rules (Table I), and Acts Requiring Publication in the Federal Register (Table II). A list of CFR titles, chapters, and parts and an alphabetical list of agencies publishing in the CFR are also included in this volume.

An index to the text of ''Title 3—The President'' is carried within that volume.

The Federal Register Index is issued monthly in cumulative form. This index is based on a consolidation of the ''Contents'' entries in the daily Federal Register.

A List of CFR Sections Affected (LSA) is published monthly, keyed to the revision dates of the 50 CFR titles.

REPUBLICATION OF MATERIAL

There are no restrictions on the republication of material appearing in the Code of Federal Regulations.

INQUIRIES

For a legal interpretation or explanation of any regulation in this volume, contact the issuing agency. The issuing agency's name appears at the top of odd–numbered pages.

For inquiries concerning CFR reference assistance, call 202–523–5227 or write to the Director, Office of the Federal Register, National Archives and Records Administration, Washington, DC 20408.

SALES

The Government Printing Office (GPO) processes all sales and distribution of the CFR. For payment by credit card, call 202–512–1800, M–F, 8 a.m. to 4 p.m. e.s.t. or fax your order to 202–512–2233, 24 hours a day. For payment by check, write to the Superintendent of Documents, Attn: New Orders, P.O. Box 371954, Pittsburgh, PA 15250–7954. For GPO Customer Service call 202–512–1803.

ELECTRONIC SERVICES

The full text of the Code of Federal Regulations, The United States Government Manual, the Federal Register, Public Laws, Weekly Compilation of Presidential Documents and the Privacy Act Compilation are available in electronic format at www.access.gpo.gov/nara (''GPO Access''). For more information, contact Electronic Information Dissemination Services, U.S. Government Printing Office. Phone 202–512–1530, or 888–293–6498 (toll–free). E–mail, gpoaccess@gpo.gov.

The Office of the Federal Register also offers a free service on the National Archives and Records Administration's (NARA) World Wide Web site for public law numbers, Federal Register finding aids, and related information. Connect to NARA's web site at www.nara.gov/fedreg. The NARA site also contains links to GPO Access.

RAYMOND A. MOSLEY,
Director,
Office of the Federal Register.

July 1, 1998.

THIS TITLE

Title 40—PROTECTION OF ENVIRONMENT is composed of twenty–three volumes. The parts in these volumes are arranged in the following order: parts 1–49, parts 50–51, parts 52.01–52.1018, part 52.1019–end, parts 53–59, part 60, parts 61–62, part 63, parts 64–71, parts 72–80, parts 81–85, part 86, parts 87–135, parts 136–149, parts 150–189, parts 190–259, parts 260–265, parts 266–299, parts 300–399, parts 400–424, parts 425–699, parts 700–789, and part 790 to end. The contents of these volumes represent all current regulations codified under this title of the CFR as of July 1, 1998.

Chapter I—Environmental Protection Agency appears in all twenty–two volumes. A Pesticide Tolerance Commodity/Chemical Index appears in parts 150–189. A Toxic Substances Chemical—CAS Number Index appears in parts 700–789 and part 790 to end. Redesignation Tables appear in the volumes containing parts 50–51, parts 150–189, and parts 700–789. Regulations issued by the Council on Environmental Quality appear in the volume containing part 790 to end.

The OMB control numbers for title 40 appear in §9.1 of this chapter. For the convenience of the user, §9.1 appears in the Finding Aids section of the volumes containing part 50 to the end.

For this volume, Gregory R. Walton was Chief Editor. The Code of Federal Regulations publication program is under the direction of Frances D. McDonald, assisted by Alomha S. Morris.

Would you like to know...

if any changes have been made to the *Code of Federal Regulations* or what documents have been published in the *Federal Register* without reading the *Federal Register* every day? If so, you may wish to subscribe to the *LSA* (List of CFR Sections Affected), the *Federal Register Index,* or both.

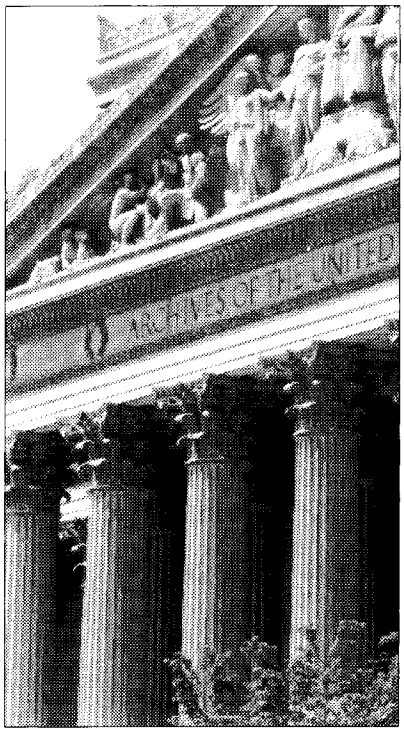

LSA

The *LSA* (List of CFR Sections Affected) is designed to lead users of the *Code of Federal Regulations* to amendatory actions published in the *Federal Register*. The *LSA* is issued monthly in cumulative form. Entries indicate the nature of the changes—such as revised, removed, or corrected.
$27 per year.

Federal Register Index

The index, covering the contents of the daily *Federal Register,* is issued monthly in cumulative form. Entries are carried primarily under the names of the issuing agencies. Significant subjects are carried as cross-references.
$25 per year.

A finding aid is included in each publication which lists *Federal Register* page numbers with the date of publication in the *Federal Register.*

Superintendent of Documents Subscription Order Form

Order Processing Code:
***5421**

❑ **YES,** send me the following indicated subscriptions for one year:

____ **LSA (List of CFR Sections Affected),** (LCS) for $27 per year.

____ **Federal Register Index** (FRSU) $25 per year.

The total cost of my order is $ _____
Price is subject to change. International customers please add 25%.

Company or personal name

Street address

City, State, ZIP code

Daytime phone with area code

Purchase order No. (optional)

(Includes regular shipping and handling.)

For privacy check box below:

❑ Do not make my name available to other mailers

Check method of payment:

❑ Check payable to Superintendent of Documents

❑ GPO Deposit Account ☐☐☐☐☐☐☐ – ☐

❑ VISA ❑ MasterCard ☐☐☐☐ (expiration date)

Credit card No. (must be 20 digits)

Thank you for your order!

Authorizing signature 1/97

Mail To: Superintendent of Documents
PO Box 371954
Pittsburgh PA 15250–7954

Fax your orders (202) 512–2250
Phone your orders (202) 512–1800

Title 40—Protection of Environment

(This book contains part 86)

Part

CHAPTER I—Environmental Protection Agency (Continued) 86

CHAPTER I—ENVIRONMENTAL PROTECTION AGENCY (CONTINUED)

SUBCHAPTER C—AIR PROGRAMS (CONTINUED)

Part		*Page*
86	Control of air pollution from new and in-use motor vehicles and new and in-use motor vehicle engines: Certification and test procedures	5

EDITORIAL NOTE: Subchapter C—Air programs is contained in volumes 40 CFR parts 50–51, part 52.01–52.1018, part 52.1019–End, parts 53–59, part 60, parts 61–62, part 63, parts 64–71, parts 72–80, parts 81–85, part 86, and parts 87–135.

PART 86—CONTROL OF AIR POLLUTION FROM NEW AND IN-USE MOTOR VEHICLES AND NEW AND IN-USE MOTOR VEHICLE ENGINES: CERTIFICATION AND TEST PROCEDURES

Sec.
86.1 Reference materials.

Subpart A—General Provisions for Emission Regulations for 1977 and Later Model Year New Light-Duty Vehicles, Light-Duty Trucks and Heavy-Duty Engines, and for 1985 and Later Model Year New Gasoline Fueled, Natural Gas-Fueled, Liquefied Petroleum Gas-Fueled and Methanol-Fueled Heavy-Duty Vehicles

86.000–2 Definitions.
86.000–3 Abbreviations.
86.000–7 Maintenance of records; submittal of information; right of entry.
86.000–8 Emission standards for 2000 and later model year light-duty vehicles.
86.000–9 Emission standards for 2000 and later model year light-duty trucks.
86.000–16 Prohibition of defeat devices.
86.000–21 Application for certification.
86.000–23 Required data.
86.000–24 Test vehicles and engines.
86.000–25 Maintenance.
86.000–26 Mileage and service accumulation; emission measurements.
86.000–28 Compliance with emission standards.
86.001–2 Definitions.
86.001–9 Emission standards for 2001 and later model year light-duty trucks.
86.001–21 Application for certification.
86.001–22 Approval of application for certification; test fleet selections; determinations of parameters subject to adjustment for certification and Selective Enforcement Audit, adequacy of limits, and physically adjustable ranges.
86.001–23 Required data.
86.001–24 Test vehicles and engines.
86.001–25 Maintenance.
86.001–26 Mileage and service accumulation; emission measurements.
86.001–28 Compliance with emission standards.
86.001–30 Certification.
86.001–35 Labeling.
86.004–2 Definitions.
86.004–9 Emission standards for 2004 and later model year light-duty trucks.
86.004–11 Emission standards for 2004 and later model year diesel heavy-duty engines and vehicles.
86.004–15 NO_X and particulate averaging, trading, and banking for heavy-duty engines.
86.004–21 Application for certification.
86.004–25 Maintenance.
86.004–28 Compliance with emission standards.
86.004–30 Certification.
86.004–38 Maintenance instructions.
86.004–40 Heavy-duty engine rebuilding practices.
86.078–3 Abbreviations.
86.078–6 Hearings on certification.
86.079–31 Separate certification.
86.079–32 Addition of a vehicle or engine after certification.
86.079–33 Changes to a vehicle or engine covered by certification.
86.079–36 Submission of vehicle identification numbers.
86.079–39 Submission of maintenance instructions.
86.080–12 Alternative certification procedures.
86.082–2 Definitions.
86.082–34 Alternative procedure for notification of additions and changes.
86.084–2 Definitions.
86.084–4 Section numbering; construction.
86.084–40 Automatic expiration of reporting and recordkeeping requirements.
86.085–1 General applicability.
86.085–2 Definitions.
86.085–13 Alternative Durability Program.
86.085–20 Incomplete vehicles, classification.
86.085–37 Production vehicles and engines.
86.087–2 Definitions.
86.087–38 Maintenance instructions.
86.088–2 Definitions.
86.088–10 Emission standards for 1988 and 1989 model year gasoline-fueled heavy-duty engines and vehicles.
86.090–1 General applicability.
86.090–2 Definitions.
86.090–3 Abbreviations.
86.090–5 General standards; increase in emissions; unsafe conditions.
86.090–8 Emission standards for 1990 and later model year light-duty vehicles.
86.090–9 Emission standards for 1990 and later model year light-duty trucks.
86.090–14 Small-volume manufacturers certification procedures.
86.090–21 Application for certification.
86.090–22 Approval of application for certification; test fleet selections; determinations of parameters subject to adjustment for certification and Selective Enforcement Audit, adequacy of limits, and physically adjustable ranges.
86.090–24 Test vehicles and engines.
86.090–25 Maintenance.

86.090–26 Mileage and service accumulation; emission requirements.
86.090–27 Special test procedures.
86.091–2 Definitions.
86.091–7 Maintenance of records; submittal of information; right of entry.
86.091–9 Emission standards for 1991 and later model year light-duty trucks.
86.091–10 Emission standards for 1991 and later model year Otto-cycle heavy-duty engines and vehicles.
86.091–11 Emission standards for 1991 and later model year diesel heavy-duty engines.
86.091–15 NO_x and particulate averaging, trading, and banking for heavy-duty engines.
86.091–21 Application for certification.
86.091–23 Required data.
86.091–28 Compliance with emission standards.
86.091–29 Testing by the Administrator.
86.091–30 Certification.
86.091–35 Labeling.
86.092–1 General applicability.
86.092–2 Definitions.
86.092–14 Small-volume manufacturers certification procedures.
86.092–15 NO_x and particulate averaging, trading, and banking for heavy-duty engines.
86.092–23 Required data.
86.092–24 Test vehicles and engines.
86.092–26 Mileage and service accumulation; emission measurements.
86.092–35 Labeling.
86.093–2 Definitions.
86.093–11 Emission standards for 1993 and later model year diesel heavy-duty engines.
86.093–35 Labeling.
86.094–1 General applicability.
86.094–2 Definitions.
86.094–3 Abbreviations.
86.094–7 Maintenance of records; submittal of information; right of entry.
86.094–8 Emission standards for 1994 and later model year light-duty vehicles.
86.094–9 Emission standards for 1994 and later model year light-duty trucks.
86.094–11 Emission standards for 1994 and later model year diesel heavy-duty engines and vehicles.
86.094–13 Light-duty exhaust durability programs.
86.094–14 Small-volume manufacturers certification procedures.
86.094–15 NO_x and particulate averaging, trading, and banking for heavy-duty engines.
86.094–16 Prohibition of defeat devices.
86.094–17 Emission control diagnostic system for 1994 and later light-duty vehicles and light-duty trucks.
86.094–21 Application for certification.
86.094–22 Approval of application for certification; test fleet selections; determinations of parameters subject to adjustment for certification and Selective Enforcement Audit, adequacy of limits, and physically adjustable ranges.
86.094–23 Required data.
86.094–24 Test vehicles and engines.
86.094–25 Maintenance.
86.094–26 Mileage and service accumulation; emission requirements.
86.094–28 Compliance with emission standards.
86.094–30 Certification.
86.094–35 Labeling.
86.094–38 Maintenance instructions.
86.095–14 Small-volume manufacturers certification procedures.
86.095–23 Required data.
86.095–24 Test vehicles and engines.
86.095–26 Mileage and service accumulation; emission measurements.
86.095–30 Certification.
86.095–35 Labeling.
86.096–2 Definitions.
86.096–3 Abbreviations.
86.096–7 Maintenance of records; submittal of information; right of entry.
86.096–8 Emission standards for 1996 and later model year light-duty vehicles.
86.096–9 Emission standards for 1996 and later model year light-duty trucks.
86.096–10 Emission standards for 1996 and later model year Otto-cycle heavy-duty engines and vehicles.
86.096–11 Emission standards for 1996 and later model year diesel heavy-duty engines and vehicles.
86.096–14 Small-volume manufacturer certification procedures.
86.096–21 Application for certification.
86.096–23 Required data.
86.096–24 Test vehicles and engines.
86.096–26 Mileage and service accumulation; emission measurements.
86.096–30 Certification.
86.096–35 Labeling.
86.097–9 Emission standards for 1997 and later model year light-duty trucks.
86.098–2 Definitions.
86.098–3 Abbreviations.
86.098–7 Maintenance of records; submittal of information; right of entry.
86.098–8 Emission standards for 1998 and later model year light-duty vehicles.
86.098–10 Emission standards for 1998 and later model year Otto-cycle heavy-duty engines and vehicles.
86.098–11 Emission standards for 1998 and later model year diesel heavy-duty engines and vehicles.
86.098–14 Small-volume manufacturers certification procedures.
86.098–15 NO_x and particulate averaging, trading, and banking for heavy-duty engines.
86.098–17 Emission control diagnostic system for 1998 and later light-duty vehicles and light-duty trucks.

86.098–21 Application for certification.
86.098–22 Approval of application for certification; test fleet selections; determinations of parameters subject to adjustment for certification and Selective Enforcement Audit, adequacy of limits, and physically adjustable ranges.
86.098–23 Required data.
86.098–24 Test vehicles and engines.
86.098–25 Maintenance.
86.098–26 Mileage and service accumulation; emission measurements.
86.098–28 Compliance with emission standards.
86.098–30 Certification.
86.098–35 Labeling.
86.099–1 General applicability.
86.099–8 Emission standards for 1999 and later model year light-duty vehicles.
86.099–9 Emission standards for 1999 and later model year light-duty trucks.
86.099–10 Emission standards for 1999 and later model year Otto-cycle heavy-duty engines and vehicles.
86.099–11 Emission standards for 1999 and later model year diesel heavy-duty engines and vehicles.

Subpart B—Emission Regulations for 1977 and Later Model Year New Light-Duty Vehicles and New Light-Duty Trucks; Test Procedures

86.101 General applicability.
86.102 Definitions.
86.103 Abbreviations.
86.104 Section numbering; construction.
86.105 Introduction; structure of subpart.
86.106–00 Equipment required; overview.
86.106–90 Equipment required; overview.
86.106–94 Equipment required; overview.
86.106–96 Equipment required; overview.
86.107–90 Sampling and analytical system; evaporative emissions.
86.107–96 Sampling and analytical systems; evaporative emissions.
86.107–98 Sampling and analytical system.
86.108–00 Dynamometer.
86.108–79 Dynamometer.
86.109–90 Exhaust gas sampling system; Otto-cycle vehicles.
86.109–94 Exhaust gas sampling system; Otto-cycle vehicles not requiring particulate emission measurements.
86.110–90 Exhaust gas sampling system; diesel vehicles.
86.110–94 Exhaust gas sampling system; diesel-cycle vehicles, and Otto-cycle vehicles requiring particulate emissions measurements.
86.111–90 Exhaust gas analytical system.
86.111–94 Exhaust gas analytical system.
86.112–91 Weighing chamber (or room) and microgram balance specifications.
86.113–91 Fuel specifications.
86.113–94 Fuel specifications.
86.114–79 Analytical gases.
86.114–94 Analytical gases.
86.115–00 EPA urban dynamometer driving schedules.
86.115–78 EPA urban dynamometer driving schedule.
86.116–90 Calibrations, frequency and overview.
86.116–94 Calibrations, frequency and overview.
86.117–90 Evaporative emission enclosure calibrations.
86.117–96 Evaporative emission enclosure calibrations.
86.118–00 Dynamometer calibrations.
86.118–78 Dynamometer calibration.
86.119–90 CVS calibration.
86.120–82 Gas meter or flow instrumentation calibration; particulate measurement.
86.120–94 Gas meter or flow instrumentation calibration; particulate, methanol and formaldehyde measurement.
86.121–82 Hydrocarbon analyzer calibration.
86.121–90 Hydrocarbon analyzer calibration.
86.122–78 Carbon monoxide analyzer calibration.
86.123–78 Oxides of nitrogen analyzer calibration.
86.124–78 Carbon dioxide analyzer calibration.
86.125–94 Methane analyzer calibration.
86.126–90 Calibration of other equipment.
86.127–00 Test procedures; overview.
86.127–90 Test procedures; overview.
86.127–94 Test procedures; overview.
86.127–96 Test procedures; overview.
86.128–00 Transmissions.
86.128–79 Transmissions.
86.129–00 Road load power, test weight, and inertia weight class determination.
86.129–80 Road load power, test weight, and inertia weight class determination.
86.129–94 Road load power, test weight, inertia weight class determination, and fuel temperature profile.
86.130–00 Test sequence; general requirements.
86.130–78 Test sequence; general requirements.
86.130–96 Test sequence; general requirements.
86.131–00 Vehicle preparation.
86.131–90 Vehicle preparation.
86.131–96 Vehicle preparation.
86.132–00 Vehicle preconditioning.
86.132–90 Vehicle preconditioning.
86.132–96 Vehicle preconditioning.
86.133–90 Diurnal breathing loss test.
86.133–96 Diurnal emission test.
86.134–96 Running loss test.
86.135–00 Dynamometer procedure.
86.135–90 Dynamometer procedure.
86.135–94 Dynamometer procedure.
86.136–90 Engine starting and restarting.
86.137–90 Dynamometer test run, gaseous and particulate emissions.
86.137–94 Dynamometer test run, gaseous and particulate emissions.

86.137–96 Dynamometer test run, gaseous and particulate emissions.
86.138–90 Hot-soak test.
86.138–96 Hot soak test.
86.139–90 Particulate filter handling and weighing.
86.140–82 Exhaust sample analysis.
86.140–90 Exhaust sample analysis.
86.140–94 Exhaust sample analysis.
86.142–90 Records required.
86.143–90 Calculations; evaporative emissions.
86.143–96 Calculations; evaporative emissions.
86.144–90 Calculations; exhaust emissions.
86.144–94 Calculations; exhaust emissions.
86.145–82 Calculations; particulate emissions.
86.146–96 Fuel dispensing spitback procedure.
86.150–98 Refueling test procedure; overview.
86.151–98 General requirements; refueling test.
86.152–98 Vehicle preparation; refueling test.
86.153–98 Vehicle and canister preconditioning; refueling test.
86.154–98 Measurement procedure; refueling test.
86.155–98 Records required; refueling test.
86.156–98 Calculations; refueling test.
86.157–98 Refueling test procedures for liquefied petroleum gas-fueled vehicles.
86.158–00 Supplemental Federal Test Procedures; overview.
86.159–00 Exhaust emission test procedures for US06 emissions.
86.160–00 Exhaust emission test procedure for SC03 emissions.
86.161–00 Air conditioning environmental test facility ambient requirements.
86.162–00 Approval of alternative air conditioning test simulations and descriptions of AC1 and AC2.
86.162–03 Approval of alternative air conditioning test simulations.
86.163–00 Spot check correlation procedures for vehicles tested using a simulation of the environmental test cell for air conditioning emission testing.
86.164–00 Supplemental Federal Test Procedure calculations.

Subpart C—Emission Regulations for 1994 and Later Model Year Gasoline-Fueled New Light-Duty Vehicles and New Light-Duty Trucks; Cold Temperature Test Procedures

86.201–94 General applicability.
86.202–94 Definitions.
86.203–94 Abbreviations.
86.204–94 Section numbering; construction.
86.205–94 Introduction; structure of this subpart.
86.206–94 Equipment required; overview.
86.207–94 [Reserved]
86.208–94 Dynamometer.
86.209–94 Exhaust gas sampling system; gasoline-fueled vehicles.
86.210–94 [Reserved]
86.211–94 Exhaust gas analytical system.
86.212–94 [Reserved]
86.213–94 Fuel specifications.
86.214–94 Analytical gases.
86.215–94 EPA urban dynamometer driving schedule.
86.216–94 Calibrations, frequency and overview.
86.217–94 [Reserved]
86.218–94 Dynamometer calibration.
86.219–94 CVS calibration.
86.220–94 [Reserved]
86.221–94 Hydrocarbon analyzer calibration.
86.222–94 Carbon monoxide analyzer calibration.
86.223–94 Oxides of nitrogen analyzer calibration.
86.224–94 Carbon dioxide analyzer calibration.
86.225–94 [Reserved]
86.226–94 Calibration of other equipment.
86.227–94 Test procedures; overview.
86.228–94 Transmissions.
86.229–94 Road load force, test weight, and inertia weight class determination.
86.230–94 Test sequence; general requirements.
86.231–94 Vehicle preparation.
86.232–94 Vehicle preconditioning.
86.233–94—86.234–94 [Reserved]
86.235–94 Dynamometer procedure.
86.236–94 Engine starting and restarting.
86.237–94 Dynamometer test run, gaseous emissions.
86.238–94—86.239–94 [Reserved]
86.240–94 Exhaust sample analysis.
86.241–94 [Reserved]
86.242–94 Records required.
86.243–94 [Reserved]
86.244–94 Calculations; exhaust emissions.
86.245–94 [Reserved]
86.246–94 Intermediate temperature testing.

Subpart D—Emission Regulations for New Gasoline-Fueled and Diesel-Fueled Heavy-Duty Engines; Gaseous Exhaust Test Procedures

86.301–79 Scope; applicability.
86.302–79 Definitions.
86.303–79 Abbreviations.
86.304–79 Section numbering; construction.
86.305–79 Introduction; structure of subpart.
86.306–79 Equipment required and specifications; overview.
86.307–82 Fuel specifications.
86.308–79 Gas specifications.
86.309–79 Sampling and analytical system; schematic drawing.
86.310–79 Sampling and analytical system; component specifications.
86.311–79 Miscellaneous equipment; specifications.

86.312–79 Dynamometer and engine equipment specifications.
86.313–79 Air flow measurement specifications; diesel engines.
86.314–79 Fuel flow measurement specifications.
86.315–79 General analyzer specifications.
86.316–79 Carbon monoxide and carbon dioxide analyzer specifications.
86.317–79 Hydrocarbon analyzer specifications.
86.318–79 Oxides of nitrogen analyzer specifications.
86.319–79 Analyzer checks and calibrations; frequency and overview.
86.320–79 Analyzer bench check.
86.321–79 NDIR water rejection ratio check.
86.322–79 NDIR CO_2 rejection ratio check.
86.327–79 Quench check; NO_X analyzer.
86.328–79 Leak checks.
86.329–79 System response time; check procedure.
86.330–79 NDIR analyzer calibration.
86.331–79 Hydrocarbon analyzer calibration.
86.332–79 Oxides of nitrogen analyzer calibration.
86.333–79 Dynamometer calibration.
86.334–79 Test procedure overview.
86.335–79 Gasoline-fueled engine test cycle.
86.336–79 Diesel engine test cycle.
86.337–79 Information.
86.338–79 Exhaust measurement accuracy.
86.339–79 Pre-test procedures.
86.340–79 Gasoline-fueled engine dynamometer test run.
86.341–79 Diesel engine dynamometer test run.
86.342–79 Post-test procedures.
86.343–79 Chart reading.
86.344–79 Humidity calculations.
86.345–79 Emission calculations.
86.346–79 Alternative NO_X measurement technique.
86.347–79 Alternative calculations for diesel engines.
86.348–79 Alternative to fuel H/C analysis.

Subpart E—Emission Regulations for 1978 and Later New Motorcycles, General Provisions

86.401–90 General applicability.
86.401–97 General applicability.
86.402–78 Definitions.
86.402–98 Definitions.
86.403–78 Abbreviations.
86.404–78 Section numbering.
86.405–78 Measurement system.
86.406–78 Introduction, structure of subpart, further information.
86.407–78 Certificate of conformity required.
86.408–78 General standards; increase in emissions; unsafe conditions.
86.409–78 Defeat devices, prohibition.
86.410–80 Emission standards for 1980 and later model year motorcycles.
86.410–90 Emission standards for 1990 and later model year motorcycles.
86.411–78 Maintenance instructions, vehicle purchaser.
86.412–78 Maintenance instructions, submission to Administrator.
86.413–78 Labeling.
86.414–78 Submission of vehicle identification number.
86.415–78 Production vehicles.
86.416–80 Application for certification.
86.417–78 Approval of application for certification.
86.418–78 Test fleet selection.
86.419–78 Engine displacement, motorcycle classes.
86.420–78 Engine families.
86.421–78 Test fleet.
86.422–78 Administrator's fleet.
86.423–78 Test vehicles.
86.425–78 Test procedures.
86.426–78 Service accumulation.
86.427–78 Emission tests.
86.428–80 Maintenance, scheduled; test vehicles.
86.429–78 Maintenance, unscheduled; test vehicles.
86.430–78 Vehicle failure.
86.431–78 Data submission.
86.432–78 Deterioration factor.
86.434–78 Testing by the Administrator.
86.435–78 Extrapolated emission values.
86.436–78 Additional service accumulation.
86.437–78 Certification.
86.438–78 Amendments to the application.
86.439–78 Alternative procedure for notification of additions and changes.
86.440–78 Maintenance of records.
86.441–78 Right of entry.
86.442–78 Denial, revocation, or suspension of certification.
86.443–78 Request for hearing.
86.444–78 Hearings on certification.

Subpart F—Emission Regulations for 1978 and Later New Motorcycles, Test Procedures

86.501–78 Applicability.
86.502–78 Definitions.
86.503–78 Abbreviations.
86.504–78 Section numbering.
86.505–78 Introduction; structure of subpart.
86.508–78 Dynamometer.
86.509–90 Exhaust gas sampling system.
86.511–90 Exhaust gas analytical system.
86.513–87 Fuel and engine lubricant specifications.
86.513–90 Fuel and engine lubricant specifications.
86.513–94 Fuel and engine lubricant specifications.
86.514–78 Analytical gases.
86.515–78 EPA urban dynamometer driving schedule.
86.516–90 Calibrations, frequency and overview.

86.518–78 Dynamometer calibration.
86.519–78 Constant volume sampler calibration.
86.519–90 Constant volume sampler calibration.
86.521–90 Hydrocarbon analyzer calibration.
86.522–78 Carbon monoxide analyzer calibration.
86.523–78 Oxides of nitrogen analyzer calibration.
86.524–78 Carbon dioxide analyzer calibration.
86.526–90 Calibration of other equipment.
86.527–90 Test procedures, overview.
86.528–78 Transmissions.
86.529–78 Road load force and inertia weight determination.
86.529–98 Road load force and inertia weight determination.
86.530–78 Test sequence, general requirements.
86.531–78 Vehicle preparation.
86.532–78 Vehicle preconditioning.
86.535–90 Dynamometer procedure.
86.536–78 Engine starting and restarting.
86.537–90 Dynamometer test runs.
86.540–90 Exhaust sample analysis.
86.542–90 Records required.
86.544–90 Calculations; exhaust emissions.

Subpart G—Selective Enforcement Auditing of New Light-Duty Vehicles

86.601–84 Applicability.
86.602–84 Definitions.
86.602–97 Definitions.
86.602–98 Definitions.
86.603–88 Test orders.
86.603–97 Test orders.
86.603–98 Test orders.
86.604–84 Testing by the Administrator.
86.605–88 Maintenance of records; submittal of information.
86.605–98 Maintenance of records; submittal of information.
86.606–84 Entry and access.
86.607–84 Sample selection.
86.608–88 Test procedures.
86.608–90 Test procedures.
86.608–96 Test procedures.
86.608–97 Test procedures.
86.608–98 Test procedures.
86.609–84 Calculation and reporting of test results.
86.609–96 Calculation and reporting of test results.
86.609–97 Calculation and reporting of test results.
86.609–98 Calculation and reporting of test results.
86.610–96 Compliance with acceptable quality level and passing and failing criteria for Selective Enforcement Audits.
86.610–98 Compliance with acceptable quality level and passing and failing criteria for Selective Enforcement Audits.
86.612–84 Suspension and revocation of certificates of conformity.
86.612–97 Suspension and revocation of certificates of conformity.
86.614–84 Hearings on suspension, revocation, and voiding of certificates of conformity.
86.615–84 Treatment of confidential information.

Subpart H—General Provisions for In-Use Emission Regulations for 1994 and Later Model Year Light-Duty Vehicles and Light-Duty Trucks

86.701–94 General applicability.
86.702–94 Definitions.
86.703–94 Abbreviations.
86.704–94 Section numbering; construction.
86.705–94—86.707–94 [Reserved]
86.708–94 In-use emission standards for 1994 and later model year light-duty vehicles.
86.708–98 In-use emission standards for 1998 and later model year light-duty vehicles.
86.709–94 In-use emission standards for 1994 and later model year light-duty trucks.
86.709–99 In-use emission standards for 1999 and later model year light-duty trucks.

Subpart I—Emission Regulations for New Diesel Heavy-Duty Engines; Smoke Exhaust Test Procedure

86.884–1 General applicability.
86.884–2 Definitions.
86.884–3 Abbreviations.
86.884–4 Section numbering.
86.884–5 Test procedures.
86.884–6 Fuel specifications.
86.884–7 Dynamometer operation cycle for smoke emission tests.
86.884–8 Dynamometer and engine equipment.
86.884–9 Smoke measurement system.
86.884–10 Information.
86.884–11 Instrument checks.
86.884–12 Test run.
86.884–13 Data analysis.
86.884–14 Calculations.

Subpart J—Fees for the Motor Vehicle and Engine Compliance Program

86.901–93 Abbreviations.
86.902–93 Definitions.
86.903–93 Applicability.
86.904–93 Section numbering; construction.
86.905–93 Purpose.
86.906–93 MVEPC certification request types.
86.907–93 Fee amounts.
86.908–93 Waivers and refunds.
86.909–93 Payment.
86.910–93 Deficiencies.
86.911–93 Adjustments of fees.

Subpart K—Selective Enforcement Auditing of New Heavy-Duty Engines, Heavy-Duty Vehicles, and Light-Duty Trucks

86.1001–84 Applicability.
86.1002–84 Definitions.
86.1002–97 Definitions.
86.1002–2001 Definitions.
86.1003–90 Test orders.
86.1003–97 Test orders.
86.1003–2001 Test orders.
86.1004–84 Testing by the Administrator.
86.1005–90 Maintenance of records; submittal of information.
86.1006–84 Entry and access.
86.1007–84 Sample selection.
86.1008–90 Test procedures.
86.1008–96 Test procedures.
86.1008–97 Test procedures.
86.1008–2001 Test procedures.
86.1009–84 Calculation and reporting of test results.
86.1009–96 Calculation and reporting of test results.
86.1009–97 Calculation and reporting of test results.
86.1009–2001 Calculation and reporting of test results.
86.1010–96 Compliance with acceptable quality level and passing and failing criteria for Selective Enforcement Audits.
86.1010–2001 Compliance with acceptable quality level and passing and failing criteria for Selective Enforcement Audits.
86.1012–84 Suspension and revocation of certificates of conformity.
86.1012–97 Suspension and revocation of certificates of conformity.
86.1014–84 Hearings on suspension, revocation and voiding of certificate of conformity.
86.1014–97 Hearings on suspension, revocation and voiding of certificates of conformity.
86.1015 Treatment of confidential information.

Subpart L—Nonconformance Penalties for Gasoline-Fueled and Diesel Heavy-Duty Engines and Heavy-Duty Vehicles, Including Light-Duty Trucks

86.1101–87 Applicability.
86.1102–87 Definitions.
86.1103–87 Criteria for availability of nonconformance penalties.
86.1104–91 Determination of upper limits.
86.1105–87 Emission standards for which nonconformance penalties are available.
86.1106–87 Production compliance auditing.
86.1107–87 Testing by the Administrator.
86.1108–87 Maintenance of records.
86.1109–87 Entry and access.
86.1110–87 Sample selection.
86.1111–87 Test procedures for PCA testing.
86.1112–87 Determining the compliance level and reporting of test results.
86.1113–87 Calculation and payment of penalty.
86.1114–87 Suspension and voiding of certificates of conformity.
86.1115–87 Hearing procedures for nonconformance determinations and penalties.
86.1116–87 Treatment of confidential information.

Subpart M—Evaporative Emission Test Procedures for New Gasoline-Fueled, Natural Gas-Fueled, Liquefied Petroleum Gas-Fueled and Methanol-Fueled Heavy-Duty Vehicles

86.1201–90 Applicability.
86.1202–85 Definitions.
86.1203–85 Abbreviations.
86.1204 Section numbering.
86.1205–90 Introduction; structure of subpart.
86.1206–90 Equipment required; overview.
86.1206–96 Equipment required; overview.
86.1207–90 Sampling and analytical systems; evaporative emissions.
86.1207–96 Sampling and analytical system; evaporative emissions.
86.1213–90 Fuel specifications.
86.1213–94 Fuel specifications.
86.1214–85 Analytical gases.
86.1215–85 EPA heavy-duty vehicle (HDV) urban dynamometer driving schedule.
86.1216–90 Calibrations; frequency and overview.
86.1217–90 Evaporative emission enclosure calibrations.
86.1217–96 Evaporative emission enclosure calibrations.
86.1218–85 Dynamometer calibration.
86.1221–90 Hydrocarbon analyzer calibration.
86.1226–85 Calibration of other equipment.
86.1227–90 Test procedures; overview.
86.1227–96 Test procedures; overview.
86.1228–85 Transmissions.
86.1229–85 Dynamometer load determination and fuel temperature profile.
86.1230–85 Test sequence; general requirements.
86.1230–96 Test sequence; general requirements.
86.1231–90 Vehicle preparation.
86.1231–96 Vehicle preparation.
86.1232–90 Vehicle preconditioning.
86.1232–96 Vehicle preconditioning.
86.1233–90 Diurnal breathing loss test.
86.1233–96 Diurnal emission test.
86.1234–96 Running loss test.
86.1235–85 Dynamometer procedure.
86.1235–96 Dynamometer procedure.
86.1236–85 Engine starting and restarting.
86.1237–85 Dynamometer runs.
86.1237–96 Dynamometer runs.
86.1238–90 Hot soak test.
86.1238–96 Hot soak test.
86.1242–90 Records required.

86.1243–90 Calculations; evaporative emissions.
86.1243–96 Calculations; evaporative emissions.
86.1246–96 Fuel dispensing spitback procedure.

Subpart N—Emission Regulations for New Otto-Cycle and Diesel Heavy-Duty Engines; Gaseous and Particulate Exhaust Test Procedures

86.1301–90 Scope, applicability.
86.1302–84 Definitions.
86.1303–84 Abbreviations.
86.1304–90 Section numbering; construction.
86.1305–90 Introduction; structure of subpart.
86.1306–90 Equipment required and specifications; overview.
86.1306–96 Equipment required and specifications; overview.
86.1308–84 Dynamometer and engine equipment specifications.
86.1309–90 Exhaust gas sampling system; Otto-cycle engines.
86.1310–90 Exhaust gas sampling and analytical system; diesel engines.
86.1311–90 Exhaust gas analytical system; CVS bag sample.
86.1311–94 Exhaust gas analytical system; CVS bag sample.
86.1312–88 Weighing chamber and microgram balance specifications.
86.1313–91 Fuel specifications.
86.1313–94 Fuel specifications.
86.1313–98 Fuel specifications.
86.1314–84 Analytical gases.
86.1314–94 Analytical gases.
86.1316–90 Calibrations; frequency and overview.
86.1316–94 Calibrations; frequency and overview.
86.1318–84 Engine dynamometer system calibrations.
86.1319–84 CVS calibration.
86.1319–90 CVS calibration.
86.1320–90 Gas meter or flow instrumentation calibration; particulate, methanol, and formaldehyde measurement.
86.1321–90 Hydrocarbon analyzer calibration.
86.1321–94 Hydrocarbon analyzer calibration.
86.1322–84 Carbon monoxide analyzer calibration.
86.1323–84 Oxides of nitrogen analyzer calibration.
86.1324–84 Carbon dioxide analyzer calibration.
86.1325–94 Methane analyzer calibration.
86.1326–90 Calibration of other equipment.
86.1327–90 Engine dynamometer test procedures; overview.
86.1327–94 Engine dynamometer test procedures; overview.
86.1327–96 Engine dynamometer test procedures; overview.
86.1327–98 Engine dynamometer test procedures; overview.
86.1330–84 Test sequence; general requirements.
86.1330–90 Test sequence; general requirements.
86.1332–90 Engine mapping procedures.
86.1333–90 Transient test cycle generation.
86.1334–84 Pre-test engine and dynamometer preparation.
86.1335–90 Cool-down procedure.
86.1336–84 Engine starting, restarting, and shutdown.
86.1337–90 Engine dynamometer test run.
86.1337–96 Engine dynamometer test run.
86.1338–84 Emission measurement accuracy.
86.1339–90 Particulate filter handling and weighing.
86.1340–90 Exhaust sample analysis.
86.1340–94 Exhaust sample analysis.
86.1341–90 Test cycle validation criteria.
86.1341–98 Test cycle validation criteria.
86.1342–90 Calculations; exhaust emissions.
86.1342–94 Calculations; exhaust emissions.
86.1343–88 Calculations; particulate exhaust emissions.
86.1344–90 Required information.
86.1344–94 Required information.

Subpart O—Emission Regulations for New Gasoline-Fueled Otto-Cycle Light-Duty Vehicles and New Gasoline-Fueled Otto-Cycle Light-Duty Trucks; Certification Short Test Procedures

86.1401 Scope; applicability.
86.1402 Definitions.
86.1403 Abbreviations.
86.1404 [Reserved]
86.1405 Introduction; structure of subpart.
86.1406 Equipment required and specifications; overview.
86.1407–86.1412 [Reserved]
86.1413 Fuel specifications.
86.1414–86.1415 [Reserved]
86.1416 Calibration; frequency and overview.
86.1417–86.1421 [Reserved]
86.1422 Analyzer calibration.
86.1423–86.1426 [Reserved]
86.1427 Certification Short Test procedure; overview.
86.1428–86.1429 [Reserved]
86.1430 Certification Short Test sequence; general requirements.
86.1431 [Reserved]
86.1432 Vehicle preparation.
86.1433 [Reserved]
86.1434 Equipment preparation.
86.1435–86.1436 [Reserved]
86.1437 Test run—manufacturer.
86.1438 Test run—EPA.
86.1439 Certification Short Test emission test procedures—EPA.
86.1440–86.1441 [Reserved]
86.1442 Information required.

Subpart P—Emission Regulations for Otto-Cycle Heavy-Duty Engines, New Methanol-Fueled Natural Gas-Fueled, and Liquefied Petroleum Gas-Fueled Diesel-Cycle Heavy-Duty Engines, New Otto-Cycle Light-Duty Trucks, and New Methanol-Fueled Natural Gas-Fueled, and Liquefied Petroleum Gas-Fueled Diesel-Cycle Light-Duty Trucks; Idle Test Procedures

86.1501–90 Scope; applicability.
86.1501–94 Scope; applicability.
86.1502–84 Definitions.
86.1503–84 Abbreviations.
86.1504–90 Section numbering; construction.
86.1504–94 Section numbering; construction.
86.1505–84 Introduction; structure of subpart.
86.1505–90 Introduction; structure of subpart.
86.1505–94 Introduction; structure of subpart.
86.1506–90 Equipment required and specifications; overview.
86.1506–94 Equipment required and specifications; overview.
86.1509–84 Exhaust gas sampling system.
86.1511–84 Exhaust gas analysis system.
86.1513–90 Fuel specifications.
86.1513–94 Fuel specifications.
86.1514–84 Analytical gases.
86.1516–84 Calibration; frequency and overview.
86.1519–84 CVS calibration.
86.1522–84 Carbon monoxide analyzer calibration.
86.1524–84 Carbon dioxide analyzer calibration.
86.1526–84 Calibration of other equipment.
86.1527–84 Idle test procedure; overview.
86.1530–84 Test sequence; general requirements.
86.1537–84 Idle test run.
86.1540–84 Idle exhaust sample analysis.
86.1542–84 Information required.
86.1544–84 Calculation; idle exhaust emissions.

Subpart Q—Regulations for Altitude Performance Adjustments for New and In-Use Motor Vehicles and Engines

86.1601 General applicability.
86.1602 Definitions.
86.1603 General requirements.
86.1604 Conditions for disapproval.
86.1605 Information to be submitted.
86.1606 Labeling.

Subpart R—General Provisions for the Voluntary National Low Emission Vehicle Program for Light-Duty Vehicles and Light-Duty Trucks

86.1701–99 General applicability.
86.1702–99 Definitions.
86.1703–99 Abbreviations.
86.1704–99 Section numbering; construction.
86.1705–99 General provisions; opt-in.
86.1706–99 National LEV program in effect.
86.1707–99 General provisions; opt-outs.
86.1708–99 Exhaust emission standards for 1999 and later light-duty vehicles.
86.1709–99 Exhaust emission standards for 1999 and later light light-duty trucks.
86.1710–99 Fleet average non-methane organic gas exhaust emission standards for light-duty vehicles and light light-duty trucks.
86.1711–99 Limitations on sale of Tier 1 vehicles and TLEVs.
86.1712–99 Maintenance of records; submittal of information.
86.1713–99 Light-duty exhaust durability programs.
86.1714–99 Small-volume manufacturers certification procedures.
86.1715–99 [Reserved]
86.1716–99 Prohibition of defeat devices.
86.1717–99 Emission control diagnostic system for 1999 and later light-duty vehicles and light-duty trucks.
86.1718–99–86.1720–99 [Reserved]
86.1721–99 Application for certification.
86.1722–99 [Reserved]
86.1723–99 Required data.
86.1724–99 Test vehicles and engines.
86.1725–99 Maintenance.
86.1726–99 Mileage and service accumulation; emission measurements.
86.1727–99 [Reserved]
86.1728–99 Compliance with emission standards.
86.1729–99–86.1733–99 [Reserved]
86.1734–99 Alternative procedure for notification of additions and changes.
86.1735–99 Labeling.
86.1736–99–86.1769–99 [Reserved]
86.1770–99 All-Electric Range Test requirements.
86.1771–99 Fuel specifications.
86.1772–99 Road load power, test weight, and inertia weight class determination.
86.1773–99 Test sequence; general requirements.
86.1774–99 Vehicle preconditioning.
86.1775–99 Exhaust sample analysis.
86.1776–99 Records required.
86.1777–99 Calculations; exhaust emissions.
86.1778–99 Calculations; particulate emissions.
86.1779–99 General enforcement provisions.
86.1780–99 Prohibited acts.

Subpart AA—Reporting and Recordkeeping Requirements for Part 86

86.2500 Reporting and recordkeeping requirements.
APPENDIX I TO PART 86—URBAN DYNAMOMETER SCHEDULES

APPENDIX II TO PART 86—TEMPERATURE SCHEDULES
APPENDIX III TO PART 86—CONSTANT VOLUME SAMPLER FLOW CALIBRATION
APPENDIX IV TO PART 86—DURABILITY DRIVING SCHEDULES
APPENDIX V TO PART 86 [RESERVED]
APPENDIX VI TO PART 86—VEHICLE AND ENGINE COMPONENTS
APPENDIXES VII–IX TO PART 86 [RESERVED]
APPENDIX X TO PART 86—SAMPLING PLANS FOR SELECTIVE ENFORCEMENT AUDITING OF HEAVY-DUTY ENGINES AND LIGHT-DUTY TRUCKS
APPENDIX XI TO PART 86—SAMPLING PLANS FOR SELECTIVE ENFORCEMENT AUDITING OF LIGHT-DUTY VEHICLES
APPENDIX XII TO PART 86—TABLES FOR PRODUCTION COMPLIANCE AUDITING OF HEAVY-DUTY ENGINES AND HEAVY-DUTY VEHICLES, INCLUDING LIGHT-DUTY TRUCKS
APPENDIX XIII TO PART 86—STATE REQUIREMENTS INCORPORATED BY REFERENCE IN PART 86 OF THE CODE OF FEDERAL REGULATIONS
APPENDIX XIV TO PART 86—DETERMINATION OF ACCEPTABLE DURABILITY TEST SCHEDULE FOR LIGHT-DUTY VEHICLES AND LIGHT LIGHT-DUTY TRUCKS CERTIFYING TO THE PROVISIONS OF PART 86, SUBPART R
APPENDIX XV TO PART 86—PROCEDURE FOR DETERMINING AN ACCEPTABLE EXHAUST REGENERATION DURABILITY-DATA TEST SCHEDULE FOR DIESEL CYCLE VEHICLES EQUIPPED WITH PERIODICALLY REGENERATING TRAP OXIDIZER SYSTEMS CERTIFYING TO THE PROVISIONS OF PART 86, SUBPART R
APPENDIX XVI TO PART 86—POLLUTANT MASS EMISSIONS CALCULATION PROCEDURE FOR GASEOUS-FUELED VEHICLES AND FOR VEHICLES EQUIPPED WITH PERIODICALLY REGENERATING TRAP OXIDIZER SYSTEMS CERTIFYING TO THE PROVISIONS OF PART 86, SUBPART R
APPENDIX XVII TO PART 86—PROCEDURE FOR DETERMINING VEHICLE EMISSION CONTROL TECHNOLOGY CATEGORY/FUEL REACTIVITY ADJUSTMENT FACTORS FOR LIGHT-DUTY VEHICLES AND LIGHT LIGHT-DUTY TRUCKS CERTIFYING TO THE PROVISIONS OF PART 86, SUBPART R
APPENDIX XVIII TO PART 86—STATISTICAL OUTLIER IDENTIFICATION PROCEDURE FOR LIGHT-DUTY VEHICLES AND LIGHT LIGHT-DUTY TRUCKS CERTIFYING TO THE PROVISIONS OF PART 86, SUBPART R

AUTHORITY: 42 U.S.C. 7401–7671q.

EFFECTIVE DATE NOTE: The new information collection requirements for part 86 published in the FEDERAL REGISTER at 59 FR 16262, Apr. 6, 1994, which apply to 1998 and later model year vehicles, have not been approved by the Office of Management and Budget (OMB) and are not effective. The Environmental Protection Agency will publish a document once OMB approves the information collection requirements.

EDITORIAL NOTE: Nomenclature changes to part 86 appear at 60 FR 34377, June 30, 1995.

§ 86.1 Reference materials.

(a) The documents in paragraph (b) of this section have been incorporated by reference. The incorporation by reference was approved by the Director of the Federal Register in accordance with 5 U.S.C. 552(a) and 1 CFR part 51. Copies may be inspected at U.S. EPA, OAR, 401 M Street, SW., Washington, DC 20460, or at the Office of the Federal Register, 800 North Capitol Street, NW., suite 700, Washington, DC.

(b) The following paragraphs and tables set forth the material that has been incorporated by reference in this part.

(1) *ASTM material.* The following table sets forth material from the American Society for Testing and Materials that has been incorporated by reference. The first column lists the number and name of the material. The second column lists the section(s) of this part, other than §86.1, in which the matter is referenced. The second column is presented for information only and may not be all inclusive. Copies of these materials may be obtained from American Society for Testing and Materials, 1916 Race St., Philadelphia, PA 19103.

Document number and name	40 CFR part 86 reference
ASTM E29–67 (Reapproved 1980), Standard Recommended Practice for Indicating Which Places of Figures Are To Be Considered Significant in Specified Limiting Values.	86.1105–87
ASTM E29–90, Standard Practice for Using Significant Digits in Test Data to Determine Conformance with Specifications.	86.609–84; 86.609–96; 86.609–97; 86.609–98; 86.1009–84; 86.1009–96; 86.1442; 86.1708–99; 86.1709–99; 86.1710–99; 86.1728–99.
ASTM D5186–91, Standard Test Method for Determination of Aromatic Content of Diesel Fuels by Supercritical Fluid Chromatography.	86.1313–91, 86.1313–94, 86.1313–98.
ASTM D2163–91, Standard Test Method for Analysis of Liquefied Petroleum (LP) Gases and Propane Concentrates by Gas Chromatography.	86.113–94; 86.1213–94; 86.1313–94.

Document number and name	40 CFR part 86 reference
ASTM D1945–91, Standard Test Method for Analysis of Natural Gas By Gas Chromatography.	86.113–94; 86.513–94; 86.1213–94; 86.1313–94.
ASTM E29–93a, Standard Practice for Using Significant Digits in Test Data to Determine Conformance with Specifications.	86.098–15, 86.004–15

(2) *SAE material.* The following table sets forth material from the Society of Automotive Engineers that has been incorporated by reference. The first column lists the number and name of the material. The second column lists the section(s) of this part, other than §86.1, in which the matter is referenced. The second column is presented for information only and may not be all inclusive. Copies of these materials may be obtained from Society of Automotive Engineers International, 400 Commonwealth Dr., Warrendale, PA, 15096–0001.

Document No. and name	40 CFR part 86 reference
SAE J1349 June 1990, Engine Power Test Code—Spark Ignition and Compression Ignition.	86.094–8; 86.096–8
SAE Recommended Practice J1151, December 1991, Methane Measurement Using Gas Chromatography, 1994 SAE Handbook—SAE International Cooperative Engineering Program, Volume 1: Materials, Fuels, Emissions, and Noise; Section 13 and page 170 (13.170).	86.111–94; 86.1311–94.
SAE Recommended Practice J1937, November 1989, Engine Testing with Low Temperature Charge Air Cooler Systems in a Dynamometer Test Cell.	86.1330–84; 86.1330–90.

(3) *ANSI material.* The following table sets forth material from the American National Standards Institute that has been incorporated by reference. The first column lists the number and name of the material. The second column lists the section(s) of this part, other than §86.1, in which the matter is referenced. The second column is presented for information only and may not be all inclusive. Copies of these materials may be obtained from the American National Standards Institute, 11 West 42nd Street, 13th Floor, New York, NY 10036.

Document number and name	40 CFR part 86 reference
ANSI/AGA NGV1–1994, Standard for Compressed Natural Gas Vehicle (NGV) Fueling Connection Devices.	86.001–9; 86.004–9; 86.098–8; 86.099–8; 86.099–9

(4) *California regulatory requirements.* The following table sets forth California regulatory requirements that have been incorporated by reference. The first column lists the name and date of the material. The second column lists the sections of the part, other than §86.1, in which the matter is referenced. The second column is presented for information only and may not be all-inclusive. Copies of these materials may be obtained from U.S. EPA, Office of Air and Radiation, 401 M Street, S.W., Washington, DC 20460.

Document No. and name	40 CFR part 86 reference
California Regulatory Requirements Applicable to the Evaporative Emissions Program, January 4, 1995.	86.096–8; 86.096–9; 86.096–10.
California Regulatory Requirements Applicable to the National Low Emission Vehicle Program, October, 1996.	86.612–97; 86.1012–97; 86.1702–99; 86.1708–99; 86.1709–99; 86.1717–99; 86.1735–99; 86.1771–99; 86.1775–99; 86.1776–99; 86.1777–99; Appendix XVI; Appendix XVII.

[58 FR 16019, Mar. 24, 1993, as amended at 58 FR 58417, Nov. 1, 1993; 59 FR 48491, 59 FR 48491, Sept. 21, 1994; 59 FR 50073, Sept. 30, 1994; 60 FR 43887, Aug. 23, 1995; 61 FR 54877, Oct. 22, 1996; 62 FR 31232, June 6, 1997; 62 FR 47119, Sept. 5, 1997; 62 FR 54715, Oct. 21, 1997; 63 FR 965, Jan. 7, 1998]

Subpart A—General Provisions for Emission Regulations for 1977 and Later Model Year New Light-Duty Vehicles, Light-Duty Trucks and Heavy-Duty Engines, and for 1985 and Later Model Year New Gasoline Fueled, Natural Gas-Fueled, Liquefied Petroleum Gas-Fueled and Methanol-Fueled Heavy-Duty Vehicles

SOURCE: 42 FR 32907, June 28, 1977, unless otherwise noted.

§ 86.000–2 Definitions.

The definitions of § 86.098–2 continue to apply to 1998 and later model year vehicles. The definitions listed in this section apply beginning with the 2000 model year.

AC1 means a test procedure as described in § 86.162–00 which simulates testing with air conditioning operating in an environmental test cell by adding the air conditioning compressor load to the normal dynamometer forces.

AC2 means a test procedure as described in § 86.162–00 which simulates testing with air conditioning operating in an environmental test cell by adding a heat load to the passenger compartment.

Alternative fuels means any fuel other than gasoline and diesel fuels, such as methanol, ethanol, and gaseous fuels.

866 Cycle means the test cycle that consists of the last 866 seconds (seconds 505 to 1372) of the EPA Urban Dynamometer Driving Schedule, described in § 86.115–00 and listed in appendix I, paragraph (a), of this part.

Environmental test cell means a test cell capable of wind-speed, solar thermal load, ambient temperature, and humidity control or simulation which meets the requirements of § 86.161–00 for running emission tests with the air conditioning operating.

Federal Test Procedure, or FTP means the test procedure as described in § 86.130–00 (a) through (d) and (f) which is designed to measure urban driving tail pipe exhaust emissions and evaporative emissions over the Urban Dynamometer Driving Schedule as described in appendix I to this part.

505 Cycle means the test cycle that consists of the first 505 seconds (seconds 1 to 505) of the EPA Urban Dynamometer Driving Schedule, described in § 86.115–00 and listed in appendix I, paragraph (a), of this part.

SC03 means the test cycle, described in § 86.160–00 and listed in appendix I, paragraph (h), of this part, which is designed to represent driving immediately following startup.

Supplemental FTP, or SFTP means the additional test procedures designed to measure emissions during aggressive and microtransient driving, as described in § 86.159–00 over the US06 cycle, and also the test procedure designed to measure urban driving emissions while the vehicle's air conditioning system is operating, as described in § 86.160–00 over the SC03 cycle.

US06 means the test cycle, described in § 86.159–00 and listed in appendix I, paragraph (g), of this part, which is designed to evaluate emissions during aggressive and microtransient driving.

[61 FR 54878, Oct. 22, 1996]

§ 86.000–3 Abbreviations.

The abbreviations in § 86.098–3 continue to apply to 1998 and later model year vehicles. The abbreviations in this section apply beginning with the 2000 model year:

A/C—Air conditioning
FTP—Federal Test Procedure
SFTP—Supplemental Federal Test Procedure
WOT—Wide Open Throttle

[61 FR 54878, Oct. 22, 1996]

§ 86.000–7 Maintenance of records; submittal of information; right of entry.

Section 86.000–7 includes text that specifies requirements that differ from § 86.091–7, § 86.094–7 or § 86.096–7. Where a paragraph in § 86.091–7, § 86.094–7 or § 86.096–7 is identical and applicable to § 86.000–7, this may be indicated by specifying the corresponding paragraph and the statement ''[Reserved]. For guidance see § 86.091–7.'' or ''[Reserved]. For guidance see § 86.094–7.'' or ''[Reserved]. For guidance see § 86.096–7.''

(a) introductory text through (a)(2) [Reserved]. For guidance see § 86.091–7.

(a)(3) [Reserved]. For guidance see § 86.094–7.

(b) through (c)(2) [Reserved]. For guidance see § 86.091–7.

(c)(3) [Reserved]. For guidance see § 86.094–7.

(c)(4) through (d)(1)(v) [Reserved]. For guidance see § 86.091–7.

(d)(1)(vi) through (d)(2)(iv) [Reserved]. For guidance see § 86.094–7.

(d)(3) through (g) [Reserved]. For guidance see § 86.091–7.

(h)(1) The manufacturer (or contractor for the manufacturer, if applicable) of any model year 2000 through 2002 light-duty vehicle or light light-duty truck or model year 2002 through 2004

heavy light-duty truck that is certified shall establish, maintain, and retain the following adequately organized and indexed records for each such vehicle:

(i) EPA engine family;

(ii) Vehicle identification number;

(iii) Model year and production date;

(iv) Shipment date;

(v) Purchaser; and

(vi) Purchase contract.

(h)(2) through (h)(5) [Reserved]. For guidance see §86.094–7.

(h)(6) Voiding a certificate. (i) EPA may void ab initio a certificate for a vehicle certified to Tier 1 certification standards or to the respective evaporative and/or refueling test procedure and accompanying evaporative and/or refueling standards as set forth or otherwise referenced in §§86.000–8, 86.000–9, or 86.098–10 for which the manufacturer fails to retain the records required in this section or to provide such information to the Administrator upon request.

(h)(6)(ii) through (h)(7)(vi) [Reserved]. For guidance see §86.096–7.

(h)(7)(vii) EPA evaporative/refueling family.

[61 FR 54878, Oct. 22, 1996]

EFFECTIVE DATE NOTE: At 61 FR 54878, Oct. 22, 1996, §86.000–7 was added. This section contains information collection and recordkeeping requirements and will not become effective until approval has been given by the Office of Management and Budget.

§86.000–8 Emission standards for 2000 and later model year light-duty vehicles.

Section 86.000–8 includes text that specifies requirements that differ from §86.096–8 or §86.099–8. Where a paragraph in §86.096–8 or §86.099–8 is identical and applicable to §86.000–8, this may be indicated by specifying the corresponding paragraph and the statement ''[Reserved]. For guidance see §86.096–8.'' or ''[Reserved]. For guidance see §86.099–8.''

(a)(1) introductory text through (a)(1)(ii)(B) [Reserved]. For guidance see §86.096–8.

(a)(1)(iii) through (b)(4) [Reserved]. For guidance see §86.099–8.

(b)(5) [Reserved]. For guidance see §86.096–8.

(b)(6) [Reserved]. For guidance see §86.099–8.

(c) [Reserved]. For guidance see §86.096–8.

(d) [Reserved]. For guidance see §86.099–8.

(e) SFTP Standards. (1) Exhaust emissions from 2000 and later model year light-duty vehicles shall meet the additional SFTP standards of table A00–2 (defined by useful life, fuel type, and test type) according to the implementation schedule in table A00–1. The standards set forth in table A00–2 refer to exhaust emissions emitted over the Supplemental Federal Test Procedure (SFTP) as set forth in subpart B of this part and collected and calculated in accordance with those procedures. Compliance with these standards are an additional requirement to the required compliance with Tier 1 standards as defined in §§86.096–8 (a)(1) introductory text through (a)(1)(ii)(B) and 86.099–8 (a)(1)(iii) through (a)(3):

TABLE A00–1—IMPLEMENTATION SCHEDULE FOR LIGHT-DUTY VEHICLES FOR ($NMHC+NO_X$) AND CO

Model year	Percentage
2000	40
2001	80
2002	100

TABLE A00–2—USEFUL LIFE STANDARDS (G/MI) FOR LIGHT-DUTY VEHICLES FOR ($NMHC+NO_X$) AND CO

Useful life	Fuel type	$NMHC+NO_X$ composite	CO		
			A/C test	US06 test	Composite option
Intermediate	Gasoline	0.65	3.0	9.0	3.4
	Diesel	1.48	NA	9.0	3.4
Full	Gasoline	0.91	3.7	11.1	4.2
	Diesel	2.07	NA	11.1	4.2

(i) A minimum of the percentage shown in table A00–1 of a manufacturer's sales of the applicable model year's light-duty vehicles shall not exceed the applicable SFTP standards in table A00–2 when tested under the procedures in subpart B of this part indicated for 2000 and later model year light-duty vehicles.

(ii) Optionally, a minimum of the percentage shown in table A00–1 of a manufacturer's combined sales of the applicable model year's light-duty vehicles and light light-duty trucks shall not exceed the applicable SFTP standards. Under this option, the light-duty vehicles shall not exceed the applicable SFTP standards in table A00–2, and the light light-duty trucks shall not exceed the applicable SFTP standards in table A00–4 of § 86.000–9.

(iii) Sales percentages for the purposes of determining compliance with this paragraph (e)(1) shall be based on total actual U.S. sales of light-duty vehicles of the applicable model year by a manufacturer to a dealer, distributor, fleet operator, broker, or any other entity which comprises the point of first sale. If the option of paragraph (e)(1)(ii) of this section is taken, such sales percentages shall be based on the total actual combined U.S. sales of light-duty vehicles and light light-duty trucks of the applicable model year by a manufacturer to a dealer, distributor, fleet operator, broker, or any other entity which comprises the point of first sale.

(iv) The manufacturer may petition the Administrator to allow actual volume produced for U.S. sale to be used in lieu of actual U.S. sales for purposes of determining compliance with the implementation schedule sales percentages of table A00–1. Such petition shall be submitted within 30 days of the end of the model year to the Vehicle Programs and Compliance Division. For the petition to be granted, the manufacturer must establish to the satisfaction of the Administrator that actual production volume is functionally equivalent to actual sales volume.

(2) These SFTP standards do not apply to vehicles certified on alternative fuels, but the standards do apply to the gasoline and diesel fuel operation of flexible fuel vehicles and dual fuel vehicles.

(3) These SFTP standards do not apply to vehicles tested at high altitude.

(4) The air to fuel ratio shall not be richer at any time than the leanest air to fuel mixture required to obtain maximum torque (lean best torque), plus a tolerance of six (6) percent. The Administrator may approve a manufacturer's request for additional enrichment if it can be shown that additional enrichment is needed to protect the engine or emissions control hardware.

(5) The requirement to use a single roll dynamometer (or a dynamometer which produces equivalent results), discussed in §§ 86.108–00, 86.118–00, and 86.129–00, applies to all SFTP and FTP test elements as set forth in subpart B of this part for families which are designated as SFTP compliant under the implementation schedule in table A00–1.

(6) Small volume manufacturers, as defined in § 86.094–14(b)(1) and (2), are exempt from the requirements of this paragraph (e) until model year 2002, when 100 percent compliance with the standards of this paragraph (e) is required. This exemption does not apply to small volume engine families as defined in § 86.094–14(b)(5).

(7) The manufacturer must state at the time of Application for Certification, based on projected U.S. sales or projected production for U.S. sale, which families will be used to attain the required implementation schedule sales percentages for certification purposes.

(8) A manufacturer cannot use one set of engine families to meet its intermediate useful life standards and another to meet its full useful life standards. The same families which are used to meet the intermediate useful life standards will be required without deviation to meet the corresponding full useful life standards.

(9) Compliance with composite standards shall be demonstrated using the calculations set forth in § 86.164–00.

(f) [Reserved]

(g) through (k) [Reserved]. For guidance see § 86.096–8.

[61 FR 54878, Oct. 22, 1996]

EFFECTIVE DATE NOTE: At 61 FR 54878, Oct. 22, 1996, § 86.000–8 was added. This section

contains information collection and recordkeeping requirements and will not become effective until approval has been given by the Office of Management and Budget.

§86.000–9 Emission standards for 2000 and later model year light-duty trucks.

Section 86.000–9 includes text that specifies requirements that differ from §86.097–9 or §86.099–9. Where a paragraph in §86.097–9 or §86.099–9 is identical and applicable to §86.000–9, this may be indicated by specifying the corresponding paragraph and the statement ''[Reserved]. For guidance see §86.097–9.'' or ''[Reserved]. For guidance see §86.099–9.''

(a)(1) introductory text through (a)(1)(iii) [Reserved]. For guidance see §86.097–9.

(a)(1)(iv) through (b)(4) [Reserved]. For guidance see §86.099–9.

(b)(5) [Reserved]

(c) [Reserved]. For guidance see §86.097–9.

(d) [Reserved]

(e) *SFTP Standards.* (1) Light light-duty trucks. (i) Exhaust emissions from 2000 and later model year light light-duty trucks shall meet the additional SFTP standards of table A00–4 (defined by useful life, fuel type, truck type, loaded vehicle weight (LVW), and test type) according to the implementation schedule in table A00–3. The standards set forth in table A00–4 refer to exhaust emissions emitted over the Supplemental Federal Test Procedure (SFTP) as set forth in subpart B of this part and collected and calculated in accordance with those procedures. Compliance with these standards are an additional requirement to the required compliance with Tier 1 standards as defined in §§86.097–9(a)(1) introductory text through (a)(1)(iii) and 86.099–9(a)(1)(iv) through (a)(3):

TABLE A00–3—IMPLEMENTATION SCHEDULE FOR LIGHT LIGHT-DUTY TRUCKS FOR ($NMHC+NO_X$) AND CO

Model year	Percentage
2000	40
2001	80
2002	100

TABLE A00–4—USEFUL LIFE STANDARDS (G/MI) FOR LIGHT LIGHT-DUTY TRUCKS FOR ($NMHC+NO_X$) AND CO

Useful life	Fuel type	Truck type	LVW (lbs)	$NMHC+NO_X$ Composite	CO		
					A/C test	US06 test	Composite option
Intermediate	Gasoline	LDT1	0–3750	0.65	3.0	9.0	3.4
		LDT2	3751–5750	1.02	3.9	11.6	4.4
	Diesel	LDT1	0–3750	1.48	NA	9.0	3.4
		LDT2	3751–5750	NA	NA	NA	NA
Full	Gasoline	LDT1	0–3750	0.91	3.7	11.1	4.2
		LDT2	3751–5750	1.37	4.9	14.6	5.5
	Diesel	LDT1	0–3750	2.07	NA	11.1	4.2
		LDT2	3751–5750	NA	NA	NA	NA

(A) A minimum of the percentage shown in table A00–3 of a manufacturer's sales of the applicable model year's light light-duty trucks shall not exceed the applicable SFTP standards in table A00–4 when tested under the procedures in subpart B of this part indicated for 2000 and later model year light light-duty trucks.

(B) Optionally, a minimum of the percentage shown in table A00–3 of a manufacturer's combined sales of the applicable model year's light-duty vehicles and light light-duty trucks shall not exceed the applicable SFTP standards. Under this option, the light-duty vehicles shall not exceed the applicable SFTP standards in table A00–2 of §86.000–8, and the light light-duty trucks shall not exceed the applicable SFTP standards in table A00–4.

(C) Sales percentages for the purposes of determining compliance with paragraph (e)(1)(i)(A) of this section shall be based on total actual U.S. sales of light light-duty trucks of the applicable model year by a manufacturer to a dealer, distributor, fleet operator, broker, or any other entity which comprises the point of first sale.

If the option of § 86.097–9(a)(1)(i)(B) is taken, such sales percentages shall be based on the total actual combined U.S. sales of light-duty vehicles and light light-duty trucks of the applicable model year by a manufacturer to a dealer, distributor, fleet operator, broker, or any other entity which comprises the point of first sale.

(D) The manufacturer may petition the Administrator to allow actual volume produced for U.S. sale to be used in lieu of actual U.S. sales for purposes of determining compliance with the implementation schedule sales percentages of table A000–3. Such petition shall be submitted within 30 days of the end of the model year to the Vehicle Programs and Compliance Division. For the petition to be granted, the manufacturer must establish to the satisfaction of the Administrator that actual production volume is functionally equivalent to actual sales volume.

(ii) These SFTP standards do not apply to light light-duty trucks certified on alternative fuels, but the standards do apply to the gasoline and diesel fuel operation of flexible fuel vehicles and dual fuel vehicles.

(iii) These SFTP standards do not apply to light light-duty trucks tested at high altitude.

(iv) The air to fuel ratio shall not be richer at any time than the leanest air to fuel mixture required to obtain maximum torque (lean best torque), plus a tolerance of six (6) percent. The Administrator may approve a manufacturer's request for additional enrichment if it can be shown that additional enrichment is needed to protect the engine or emissions control hardware.

(v) The requirement to use a single roll dynamometer (or a dynamometer which produces equivalent results), discussed in §§ 86.108–00, 86.118–00, and 86.129–00, applies to all SFTP and FTP test elements as set forth in subpart B of this part for engine families which are designated as SFTP compliant under the implementation schedule in table A00–3.

(vi) Small volume manufacturers, as defined in § 86.094–14(b) (1) and (2), are exempt from the requirements of this paragraph (e) until model year 2002, when 100 percent compliance with the standards of this paragraph (e) is required. This exemption does not apply to small volume engine families as defined in § 86.094–14(b)(5).

(vii) The manufacturer must state at the time of Application for Certification, based on projected U.S. sales or projected production for U.S. sale, which engine families will be used to attain the required implementation schedule sales percentages for certification purposes.

(viii) A manufacturer cannot use one set of engine families to meet its intermediate useful life standards and another to meet its full useful life standards. The same engine families which are used to meet the intermediate useful life standards will be required without deviation to meet the corresponding full useful life standards.

(ix) Compliance with composite standards shall be demonstrated using the calculations set forth in § 86.164–00.

(2) Heavy light-duty trucks. (i) Exhaust emissions from 2002 and later model year heavy light-duty trucks shall meet the SFTP standards of table A00–6 (defined by useful life, fuel type, truck type, adjusted loaded vehicle weight (ALVW), and test type) according to the implementation schedule in table A00–5. The standards set forth in table A00–6 refer to exhaust emissions emitted over the Supplemental Federal Test Procedure (SFTP) as set forth in subpart B of this part and collected and calculated in accordance with those procedures. Compliance with these standards are an additional requirement to the required compliance with Tier 1 standards as defined in §§ 86.097–9(a)(1) introductory text through (a)(1)(iii) and 86.099–9(a)(1)(iv) through (a)(3):

TABLE A00–5—IMPLEMENTATION SCHEDULE FOR HEAVY LIGHT-DUTY TRUCKS FOR ($NMHC+NO_X$) and CO

Model year	Percentage
2002	40
2003	80
2004	100

TABLE A00–6—USEFUL LIFE STANDARDS (G/MI) FOR HEAVY LIGHT-DUTY TRUCKS FOR ($NMHC+NO_X$) AND CO

Useful life	Fuel type	Truck type	ALVW (lbs)	$NMHC+NO_X$ composite	CO		
					A/C test	US06 test	Composite option
Intermediate	Gasoline	LDT3	3751–5750	1.02	3.9	11.6	4.4
		LDT4	>5750	1.49	4.4	13.2	5.0
	Diesel	LDT3	3751–5750	NA	NA	NA	NA
		LDT4	>5750	NA	NA	NA	NA
Full	Gasoline	LDT3	3751–5750	1.44	5.6	16.9	6.4
		LDT4	>5750	2.09	6.4	19.3	7.3
	Diesel	LDT3	3751–5750	NA	NA	NA	NA
		LDT4	>5750	NA	NA	NA	NA

(A) A minimum of the percentage shown in table A00–5 of a manufacturer's sales of the applicable model year's heavy light-duty trucks shall not exceed the applicable SFTP standards in table A00–6 when tested under the procedures in subpart B of this part indicated for 2002 and later model year heavy light-duty trucks.

(B) Sales percentages for the purposes of determining compliance with paragraph (e)(1)(ii)(A) of this section shall be based on total actual U.S. sales of heavy light-duty trucks of the applicable model year by a manufacturer to a dealer, distributor, fleet operator, broker, or any other entity which comprises the point of first sale.

(C) The manufacturer may petition the Administrator to allow actual volume produced for U.S. sale to be used in lieu of actual U.S. sales for purposes of determining compliance with the implementation schedule sales percentages of table A00–5. Such petition shall be submitted within 30 days of the end of the model year to the Vehicle Programs and Compliance Division. For the petition to be granted, the manufacturer must establish to the satisfaction of the Administrator that actual production volume is functionally equivalent to actual sales volume.

(ii) These SFTP standards do not apply to heavy light-duty trucks certified on alternative fuels, but the standards do apply to the gasoline fuel operation of flexible fuel vehicles and dual fuel vehicles.

(iii) These SFTP standards do not apply to heavy light-duty trucks tested at high altitude.

(iv) The air to fuel ratio shall not be richer at any time than the leanest air to fuel mixture required to obtain maximum torque (lean best torque), plus a tolerance of six (6) percent. The Administrator may approve a manufacturer's request for additional enrichment if it can be shown that additional enrichment is needed to protect the engine of emissions control hardware.

(v) The requirement to use a single roll dynamometer (or a dynamometer which produces equivalent results), discussed in §§ 86.108–00, 86.118–00, and 86.129–00, applies to all SFTP and FTP test elements for families which are designated as SFTP compliant under the implementation schedule in table A00–5.

(vi) Small volume manufacturers, as defined in § 86.094–14(b) (1) and (2), are exempt from the requirements of paragraph (e) of this section until model year 2004, when 100 percent compliance with the standards of this paragraph (e) is required. This exemption does not apply to small volume engine families as defined in § 86.094–14(b)(5).

(vii) The manufacturer must state at the time of Application for Certification, based on projected U.S. sales or projected production for U.S. sale, which families will be used to attain the required implementation schedule sales percentages for certification purposes.

(viii) A manufacturer cannot use one set of engine families to meet its intermediate useful life standards and another to meet its full useful life standards. The same families which are used to meet the intermediate useful life standards will be required without deviation to meet the corresponding full useful life standard.

(ix) The NO_X averaging program is not applicable for determining compliance with the standards of table A00–6.

(x) Compliance with composite standards shall be demonstrated using the calculations set forth in § 86.164–00.

(f) [Reserved]

(g) through (k) [Reserved]. For guidance see § 86.097–9.

[61 FR 54879, Oct. 22, 1996]

EFFECTIVE DATE NOTE: At 61 FR 54879, Oct. 22, 1996, § 86.000–9 was added. This section contains information collection and recordkeeping requirements and will not become effective until approval has been given by the Office of Management and Budget.

§ 86.000–16 Prohibition of defeat devices.

Section 86.000–16 includes text that specifies requirements that differ from § 86.094–16. Where a paragraph in § 86.094–16 is identical and applicable to § 86.000–16, this may be indicated by specifying the corresponding paragraph and the statement ''[Reserved]. For guidance see § 86.094–16.''

(a) through (d) introductory text [Reserved]. For guidance see § 86.094–16.

(d)(1) The manufacturer must show to the satisfaction of the Administrator that the vehicle design does not incorporate strategies that unnecessarily reduce emission control effectiveness exhibited during the Federal or Supplemental Federal emissions test procedures (FTP or SFTP) when the vehicle is operated under conditions which may reasonably be expected to be encountered in normal operation and use.

(d)(2) through (d)(2)(ii) [Reserved]. For guidance see § 86.094–16.

[61 FR 54881, Oct. 22, 1996]

§ 86.000–21 Application for certification.

Section 86.000–21 includes text that specifies requirements that differ from § 86.094–21, § 86.096–21 or § 86.098–21. Where a paragraph in § 86.094–21, § 86.096–21 or § 86.098–21 is identical and applicable to § 86.000–21, this may be indicated by specifying the corresponding paragraph and the statement ''[Reserved]. For guidance see § 86.094–21.'' or ''[Reserved]. For guidance see § 86.096–21.'' or ''[Reserved]. For guidance see § 86.098–21.''

(a) through (b)(1)(i)(B) [Reserved]. For guidance see § 86.094–21.

(b)(1)(i)(C) The manufacturer must submit a Statement of Compliance in the application for certification which attests to the fact that they have assured themselves that the engine family is designed to comply with the intermediate temperature cold testing criteria of subpart C of this part, and does not unnecessarily reduce emission control effectiveness of vehicles operating at high altitude or other conditions not experienced within the US06 (aggressive driving) and SC03 (air conditioning) test cycles.

(b)(1)(i)(C)(*1*) through (b)(1)(ii)(C) [Reserved]. For guidance see § 86.094–21.

(b)(2) Projected U.S. sales data sufficient to enable the Administrator to select a test fleet representative of the vehicles (or engines) for which certification is requested, and data sufficient to determine projected compliance with the standards implementation schedules of §§ 86.000–8 and 86.000–9. Volume projected to be produced for U.S. sale may be used in lieu of projected U.S. sales.

(b)(3) A description of the test equipment and fuel proposed to be used.

(b)(4)(i) [Reserved]. For guidance see § 86.098–21.

(b)(4)(ii) through (b)(5)(iv) [Reserved]. For guidance see § 86.094–21.

(b)(5)(v) [Reserved]. For guidance see § 86.098–21.

(b)(6) through (b)(8) [Reserved]. For guidance see § 86.094–21.

(b)(9) through (b)(10)(iii) [Reserved]. For guidance see § 86.098–21.

(c) through (j) [Reserved]. For guidance see § 86.094–21.

(k) and (l) [Reserved]. For guidance see § 86.096–21.

[61 FR 54882, Oct. 22, 1996]

EFFECTIVE DATE NOTE: At 61 FR 54882, Oct. 22, 1996, § 86.000–21 was added. This section contains information collection and recordkeeping requirements and will not become effective until approval has been given by the Office of Management and Budget.

§ 86.000–23 Required data.

Section 86.000–23 includes text that specifies requirements that differ from § 86.095–23 or § 86.098–23. Where a paragraph in § 86.095–23 or § 86.098–23 is identical and applicable to § 86.000–23, this

may be indicated by specifying the corresponding paragraph and the statement ''[Reserved]. For guidance see §86.095–23.'' or ''[Reserved]. For guidance see §86.098–23.''

(a) through (b)(1)(ii) [Reserved]. For guidance see §86.095–23.

(b)(2) [Reserved]. For guidance see §86.098–23.

(b)(3) through (b)(4)(ii) [Reserved]. For guidance see §86.095–23.

(b)(4)(iii) [Reserved]. For guidance see §86.098–23.

(c) through (e)(1) [Reserved]. For guidance see §86.095–23.

(e)(2) through (e)(3) [Reserved]. For guidance see §86.098–23.

(f) through (k) [Reserved]. For guidance see §86.095–23.

(l) Additionally, manufacturers certifying vehicles shall submit for each model year 2000 through 2002 light-duty vehicle and light light-duty truck engine family and each model year 2002 through 2004 heavy light-duty truck engine family the information listed in paragraphs (l) (1) and (2) of this section.

(1) Application for certification. In the application for certification, the manufacturer shall submit the projected sales volume of engine families certifying to the respective standards. Volume projected to be produced for U.S. sale may be used in lieu of projected U.S. sales.

(2) End-of-year reports for each engine family.

(i) These end-of-year reports shall be submitted within 90 days of the end of the model year to: Director, Vehicle Programs and Compliance Division, U.S. Environmental Protection Agency, 401 M Street, SW, Washington, DC, 20460.

(ii) These reports shall indicate the model year, engine family, and the actual U.S. sales volume. The manufacturer may petition the Administrator to allow volume produced for U.S. sale to be used in lieu of U.S. sales. Such petition shall be submitted within 30 days of the end of the model year to the Manufacturers Operations Division. For the petition to be granted, the manufacturer must establish to the satisfaction of the Administrator that production volume is functionally equivalent to sales volume.

(iii) The U.S. sales volume for end-of-year reports shall be based on the location of the point of sale to a dealer, distributor, fleet operator, broker, or any other entity which comprises the point of first sale.

(iv) Failure by a manufacturer to submit the end-of-year report within the specified time may result in certificate(s) for the engine family(ies) certified to Tier 1 certification standards being voided ab initio plus any applicable civil penalties for failure to submit the required information to the Agency.

(v) These reports shall include the information required under §86.000–7(h)(1). The information shall be organized in such a way as to allow the Administrator to determine compliance with the SFTP standards implementation schedules of §§86.000–8 and 86.000–9.

(m) [Reserved]. For guidance see §86.098–23.

[61 FR 54882, Oct. 22, 1996]

EFFECTIVE DATE NOTE: At 61 FR 54882, Oct. 22, 1996, §86.000–23 was added. This section contains information collection and recordkeeping requirements and will not become effective until approval has been given by the Office of Management and Budget.

§86.000–24 Test vehicles and engines.

Section 86.000–24 includes text that specifies requirements that differ from §86.096–24 or §86.098–24. Where a paragraph in §86.096–24 or §86.098–24 is identical and applicable to §86.000–24, this may be indicated by specifying the corresponding paragraph and the statement ''[Reserved]. For guidance see §86.096–24.'' or ''[Reserved]. For guidance see §86.098–24.''

(a) introductory text through (a)(4) [Reserved]. For guidance see §86.096–24.

(a)(5) through (a)(7) [Reserved]. For guidance see §86.098–24.

(a)(8) through (b)(1) introductory text [Reserved]. For guidance see §86.096–24.

(b)(1)(i) Vehicles are chosen to be operated and tested for emission data based upon engine family groupings. Within each engine family, one test vehicle is selected. If air conditioning is projected to be available on any vehicles within the engine family, the Administrator will limit selections to engine codes which have air conditioning

available and will require that any vehicle selected under this section has air conditioning installed and operational. The Administrator selects as the test vehicle the vehicle with the heaviest equivalent test weight (including options) within the family which meets the air conditioning eligibility requirement discussed earlier in this section. If more than one vehicle meets this criterion, then within that vehicle grouping, the Administrator selects, in the order listed, the highest road-load power, largest displacement, the transmission with the highest numerical final gear ratio (including overdrive), the highest numerical axle ratio offered in that engine family, and the maximum fuel flow calibration.

(ii) The Administrator selects one additional test vehicle from within each engine family. The additional vehicle selected is the vehicle expected to exhibit the highest emissions of those vehicles remaining in the engine family. The selected vehicle will include an air conditioning engine code unless the Administrator chooses a worst vehicle configuration that is not available with air conditioning. If all vehicles within the engine family are similar, the Administrator may waive the requirements of this paragraph.

(b)(1)(iii) through (b)(1)(vi) [Reserved]. For guidance see § 86.096–24.

(b)(1)(vii)(A) through (b)(1)(viii)(A) [Reserved]. For guidance see § 86.098–24.

(b)(1)(viii)(B) through (e)(2) [Reserved]. For guidance see § 86.096–24.

(f) [Reserved]. For guidance see § 86.098–24.

(g)(1) through (g)(2) [Reserved]. For guidance see § 86.096–24.

(g)(3) Except for air conditioning, where it is expected that 33 percent or less of a carline, within an engine-system combination, will be equipped with an item (whether that item is standard equipment or an option) that can reasonably be expected to influence emissions, that item may not be installed on any emission data vehicle or durability data vehicle of that carline within that engine-system combination, unless that item is standard equipment on that vehicle or specifically required by the Administrator.

(4) Air conditioning must be installed and operational on any emission data vehicle of any vehicle configuration that is projected to be available with air conditioning regardless of the rate of installation of air conditioning within the carline. Section 86.096–24(g) (1) and (2) and paragraph (g)(3) of this section will be used to determine whether the weight of the air conditioner will be included in equivalent test weight calculations for emission testing.

(h) [Reserved]. For guidance see § 86.096–24.

[61 FR 54882, Oct. 22, 1996]

EFFECTIVE DATE NOTE: At 61 FR 54882, Oct. 22, 1996, § 86.000–24 was added. This section contains information collection and recordkeeping requirements and will not become effective until approval has been given by the Office of Management and Budget.

§ 86.000–25 Maintenance.

Section 86.000–25 includes text that specifies requirements that differ from § 86.094–25 or § 86.098–25. Where a paragraph in § 86.094–25 or § 86.098–25 is identical and applicable to § 86.000–25, this may be indicated by specifying the corresponding paragraph and the statement ''[Reserved]. For guidance see § 86.094–25.'' or ''[Reserved]. For guidance see § 86.098–25.''

(a)(1) Applicability. This section applies to light-duty vehicles, light-duty trucks, and heavy-duty engines.

(a)(2) Maintenance performed on vehicles, engines, subsystems, or components used to determine exhaust, evaporative or refueling emission deterioration factors is classified as either emission-related or non-emission-related and each of these can be classified as either scheduled or unscheduled. Further, some emission-related maintenance is also classified as critical emission-related maintenance.

(b) introductory text through (b)(3)(vi)(D) [Reserved]. For guidance see § 86.094–25.

(b)(3)(vi)(E) through (b)(3)(vi)(J) [Reserved]. For guidance see § 86.098–25.

(b)(3)(vii) through (b)(6)(i)(E) [Reserved]. For guidance see § 86.094–25.

(b)(6)(i)(F) [Reserved]. For guidance see § 86.098–25.

(b)(6)(i)(G) through (H) [Reserved]. For guidance see § 86.094–25.

(i) When air conditioning SFTP exhaust emission tests are required, the manufacturer must document that the

vehicle's air conditioning system is operating properly and that system parameters are within operating design specifications prior to test. Required air conditioning system maintenance is performed as unscheduled maintenance and does not require the Administrator's approval.

[61 FR 54883, Oct. 22, 1996]

EFFECTIVE DATE NOTE: At 61 FR 54883, Oct. 22, 1996, §86.000–25 was added. This section contains information collection and recordkeeping requirements and will not become effective until approval has been given by the Office of Management and Budget.

§86.000–26 Mileage and service accumulation; emission measurements.

Section 86.000–26 includes text that specifies requirements that differ from §86.094–26, §86.095–26, §86.096–26 or §86.098–26. Where a paragraph in §86.094–26, §86.095–26, §86.096–26 or §86.098–26 is identical and applicable to §86.000–26, this may be indicated by specifying the corresponding paragraph and the statement ''[Reserved]. For guidance see §86.094–26.'' or ''[Reserved]. For guidance see §86.095–26.'' or ''[Reserved]. For guidance see §86.096–26.'' or ''[Reserved]. For guidance see §86.098–26.''

(a)(1) [Reserved]. For guidance see §86.094–26.

(a)(2) The standard method of whole-vehicle service accumulation for durability data vehicles and for emission data vehicles shall be mileage accumulation using the Durability Driving Schedule as specified in appendix IV to this part. A modified procedure may also be used if approved in advance by the Administrator. Except with the advance approval of the Administrator, all vehicles will accumulate mileage at a measured curb weight which is within 100 pounds of the estimated curb weight. If the loaded vehicle weight is within 100 pounds of being included in the next higher inertia weight class as specified in §86.129, the manufacturer may elect to conduct the respective emission tests at higher loaded vehicle weight.

(3) Emission data vehicles. Unless otherwise provided for in §86.000–23(a), emission-data vehicles shall be operated and tested as described in paragraph (a)(3)(i)(A) of this section; §86.094–26(a)(3)(i)(B) and (D), §86.098–26(a)(3)(i)(C) and (a)(3)(ii)(C), and §86.094–26(a)(3)(ii) (A), (B) and (D).

(i) Otto-cycle. (A) The manufacturer shall determine, for each engine family, the mileage at which the engine-system combination is stabilized for emission-data testing. The manufacturer shall maintain, and provide to the Administrator if requested, a record of the rationale used in making this determination. The manufacturer may elect to accumulate 4,000 miles on each test vehicle within an engine family without making a determination. The manufacturer must accumulate a minimum of 2,000 miles (3,219 kilometers) on each test vehicle within an engine family. All test vehicle mileage must be accurately determined, recorded, and reported to the Administrator. Any vehicle used to represent emission-data vehicle selections under §86.000–24(b)(1) shall be equipped with an engine and emission control system that has accumulated the mileage the manufacturer chose to accumulate on the test vehicle. Fuel economy data generated from certification vehicles selected in accordance with §86.000–24(b)(1) with engine-system combinations that have accumulated more than 10,000 kilometers (6,200 miles) shall be factored in accordance with 40 CFR 600.006–87(c). Complete exhaust (FTP and SFTP tests), evaporative and refueling (if required) emission tests shall be conducted for each emission-data vehicle selection under §86.000–24(b)(1). The Administrator may determine under §86.000–24(f) that no testing is required.

(a)(3)(i)(B) [Reserved]. For guidance see §86.094–26.

(a)(3)(i)(C) [Reserved]. For guidance see §86.098–26.

(a)(3)(i)(D) through (a)(3)(ii)(B)[Reserved]. For guidance see §86.094–26.

(a)(3)(ii)(C) [Reserved]. For guidance see §86.098–26.

(a)(3)(ii)(D) through (a)(4)(i)(B)(*4*)[Reserved]. For guidance see §86.094–26.

(a)(4)(i)(C) Complete exhaust emission tests shall be made at nominal test point mileage intervals that the manufacturer determines. Unless the

Administrator approves a manufacturer's request to develop specific deterioration factors for aggressive driving (US06) and air conditioning (SC03) test cycle results, tail pipe exhaust emission deterioration factors are determined from only FTP test cycle data. At a minimum, two complete exhaust emission tests shall be made. The first test shall be made at a distance not greater than 6,250 miles. The last shall be made at the mileage accumulation endpoint determined in § 86.094–26 (a)(4)(i) (A) or (B), whichever is applicable.

(a)(4)(i)(D) through (a)(6)(ii) [Reserved]. For guidance see § 86.094–26.

(a)(6)(iii) The results of all emission tests shall be rounded to the number of places to the right of the decimal point indicated by expressing the applicable emission standard of this subpart to one additional significant figure, in accordance with the Rounding-Off Method specified in ASTM E29–90, Standard Practice for Using Significant Digits in Test Data to Determine Conformance with Specifications (incorporated by reference; see § 86.1).

(a)(7) through (a)(9)(i) [Reserved]. For guidance see § 86.094–26.

(a)(9)(ii) The test procedures in §§ 86.106 through 86.149 and § 86.158 will be followed by the Administrator. The Administrator may test the vehicles at each test point. Maintenance may be performed by the manufacturer under such conditions as the Administrator may prescribe.

(a)(9)(iii) through (b)(2) introductory text [Reserved]. For guidance see § 86.094–26.

(b)(2)(i) This paragraph (b)(2)(i) applies to service accumulation conducted under the Standard Self-Approval Durability Program of § 86.094–13(f). The manufacturer determines the form and extent of this service accumulation, consistent with good engineering practice, and describes it in the application for certification. Service accumulation under the Standard Self-Approval Durability Program is conducted on vehicles, engines, subsystems, or components selected by the manufacturer under § 86.000–24(c)(2)(i).

(ii) This paragraph (b)(2)(ii) applies to service accumulation conducted under the Alternative Service Accumulation Durability Program of § 86.094–13(e). The service accumulation method is developed by the manufacturer to be consistent with good engineering practice and to accurately predict the deterioration of the vehicle's emissions in actual use over its full useful life. The method is subject to advance approval by the Administrator and to verification by an in-use verification program conducted by the manufacturer under § 86.094–13(e)(5).

(b)(2)(iii) through (b)(4)(i)(C) [Reserved]. For guidance see § 86.094–26.

(b)(4)(i)(D) through (b)(4)(ii)(D) [Reserved]. For guidance see § 86.095–26.

(b)(4)(iii) [Reserved].

(b)(4)(iv) through (c)(3) [Reserved]. For guidance see § 86.094–26.

(c)(4) [Reserved]. For guidance see § 86.096–26.

(d) introductory text through (d)(2)(i) [Reserved]. For guidance see § 86.094–26.

(d)(2)(ii) The results of all emission tests shall be recorded and reported to the Administrator. These test results shall be rounded, in accordance with the Rounding-Off Method specified in ASTM E29–90, Standard Practice for Using Significant Digits in Test Data to Determine Conformance with Specifications (incorporated by reference; see § 86.1), to the number of decimal places contained in the applicable emission standard expressed to one additional significant figure.

(d)(3) through (d)(6) [Reserved]. For guidance see § 86.094–26.

[61 FR 54883, Oct. 22, 1996]

EFFECTIVE DATE NOTE: At 61 FR 54883, Oct. 22, 1996, § 86.000–26 was added. This section contains information collection and recordkeeping requirements and will not become effective until approval has been given by the Office of Management and Budget.

§ 86.000–28 Compliance with emission standards.

Section 86.000–28 includes text that specifies requirements that differ from § 86.094–28 or § 86.098–28. Where a paragraph in § 86.094–28 or § 86.098–28 is identical and applicable to § 86.000–28, this may be indicated by specifying the corresponding paragraph and the statement ''[Reserved]. For guidance see § 86.094–28.'' or ''[Reserved]. For guidance see § 86.098–28.''

(a)(1) This paragraph (a) applies to light duty vehicles.

(2) Each exhaust, evaporative and refueling emission standard (and family particulate emission limits, as appropriate) of § 86.000–8 applies to the emissions of vehicles for the appropriate useful life as defined in §§ 86.000–2 and 86.000–8.

(a)(3) [Reserved]. For guidance see § 86.094–28.

(a)(4) Introductory text [Reserved]. For guidance see § 86.098–28.

(a)(4)(i) Separate emission deterioration factors for each regulated exhaust constituent shall be determined from the FTP exhaust emission results of the durability-data vehicle(s) for each engine-system combination. Unless the Administrator approves a manufacturer's request to develop specific deterioration factors for US06 and air conditioning (SC03) test results, applicable FTP deterioration factors will also be used to estimate intermediate and full useful life emissions for all SFTP regulated emission levels. Separate evaporative and/or refueling emission deterioration factors shall be determined for each evaporative/refueling emission family-emission control system combination from the testing conducted by the manufacturer (gasoline-fueled and methanol-fueled vehicles only). Separate refueling emission deterioration factors shall be determined for each evaporative/refueling emission family-emission control system combination from the testing conducted by the manufacturer (petroleum-fueled diesel cycle vehicles not certified under the provisions of § 86.098–28(g) only).

(a)(4)(i)(A) through (a)(4)(i)(B)(*2*)(*i*) [Reserved]. For guidance see § 86.094–28.

(a)(4)(i)(B)(*2*)(*ii*) These interpolated values shall be carried out to a minimum of four places to the right of the decimal point before dividing one by the other to determine the deterioration factor. The results shall be rounded to three places to the right of the decimal point in accordance with the Rounding-Off Method specified in ASTM E29–90, Standard Practice for Using Significant Digits in Test Data to Determine Conformance with Specifications (incorporated by reference; see § 86.1).

(a)(4)(i)(B)(*2*)(*iii*) through (a)(4)(i)(B)(*2*)(*iv*) [Reserved]. For guidance see § 86.094–28.

(a)(4)(i)(C) through (a)(4)(i)(D)(*2*) [Reserved]. For guidance see § 86.098–28.

(a)(4)(ii)(A)(*1*) The official exhaust emission test results for each applicable exhaust emission standard for each emission data vehicle at the selected test point shall be multiplied by the appropriate deterioration factor: *Provided*, that if a deterioration factor as computed in paragraph (a)(4)(i)(B)(*2*)(*ii*) of this section is less than one, that deterioration factor shall be one for the purposes of this paragraph. For the SFTP composite standard of ($NMHC+NO_X$), the measured results of NMHC and NO_X must each be multiplied by their corresponding deterioration factors before the composite ($NMHC+NO_X$) standard is calculated.

(*2*) The calculation specified in paragraph (a)(4)(ii)(A)(*1*) of this section may be modified with advance approval of the Administrator for engine-system combinations which are certified under the Alternative Service Accumulation Durability Program specified in § 86.094–13(e).

(a)(4)(ii)(B) through (a)(4)(ii)(C) [Reserved]. For guidance see § 86.098–28.

(a)(4)(iii) The emissions to compare with the standard (or the family particulate emission limit, as appropriate) shall be the adjusted emissions of § 86.098–28 (a)(4)(ii)(B) and (C) and paragraph (a)(4)(ii)(A) of this section 211a for each emission-data vehicle. For the SFTP composite ($NMHC+NO_X$) results, the individual deterioration factors must be applied to the applicable NMHC and NO_X test results prior to calculating the adjusted composite ($NMHC+NO_X$) level that is compared with the standard. The additional composite calculations that are required by the SFTP are discussed in § 86.164–00 (Supplemental federal test procedure calculations). Before any emission value is compared with the standard (or the family particulate emission limit, as appropriate), it shall be rounded to two significant figures in accordance with the Rounding-Off Method specified in ASTM E29–90, Standard Practice for Using Significant Digits in Test Data to Determine

Conformance with Specifications (incorporated by reference; see § 86.1). The rounded emission values may not exceed the standard (or the family particulate emission limit, as appropriate).

(a)(4)(iv) [Reserved]. For guidance see § 86.094–28.

(a)(4)(v) [Reserved]. For guidance see § 86.098–28.

(a)(5) through (a)(6) [Reserved]. For guidance see § 86.094–28.

(a)(7) introductory text [Reserved]. For guidance see § 86.098–28.

(a)(7)(i) Separate deterioration factors shall be determined from the exhaust emission results of the durability data vehicles for each emission standard applicable under § 86.000–8, for each engine family group. Unless the Administrator approves a manufacturer's request to develop specific deterioration factors for US06 and air conditioning (SC03) test results, applicable deterioration factors determined from FTP exhaust emission results will also be used to estimate intermediate and full useful life emissions for all SFTP regulated emission levels. The evaporative and/or refueling emission deterioration factors for each evaporative/refueling family will be determined and applied in accordance with § 86.098–28 (a)(4) introductory text, (a)(4)(i)(C) and (D), (a)(4)(ii)(B) and (C), and (a)(4)(v) and § 86.094–28 (a)(4)(i)(A) through (a)(4)(i)(B)(*2*)(*i*), (a)(4)(i)(B)(*2*)(*iii*) and (*iv*), and (a)(4)(iv) and paragraphs (a)(4)(i) introductory, (a)(4)(i)(B)(*2*)(*ii*), (a)(4)(ii)(A), and (a)(4)(iii) of this section.

(a)(7)(ii) through (b)(4)(i) [Reserved]. For guidance see § 86.094–28.

(b)(4)(ii) Separate exhaust emission deterioration factors for each regulated exhaust constituent, determined from tests of vehicles, engines, subsystems, or components conducted by the manufacturer, shall be supplied for each standard and for each engine-system combination. Unless the Administrator approves a manufacturer's request to develop specific deterioration factors for US06 and air conditioning (SC03) test results, applicable deterioration factors determined from FTP exhaust emission results will also be used to estimate intermediate and full useful life emissions for all SFTP regulated emission levels.

(iii) The official exhaust emission results for each applicable exhaust emission standard for each emission data vehicle at the selected test point shall be adjusted by multiplication by the appropriate deterioration factor. However, if the deterioration factor supplied by the manufacturer is less than one, it shall be one for the purposes of this paragraph (b)(4)(iii).

(iv) The emissions to compare with the standard(s) (or the family particulate emission limit, as appropriate) shall be the adjusted emissions of paragraph (b)(4)(iii) of this section for each emission-data vehicle. For the SFTP composite (NMHC+NO_X) results, the individual deterioration factors must be applied to the applicable NMHC and NO_X test results prior to calculating the adjusted composite (NMHC+NO_X) level that is compared with the standard. The additional composite calculations that are required by the SFTP are discussed in § 86.164–00 (Supplemental federal test procedure calculations). Before any emission value is compared with the standard, it shall be rounded to two significant figures in accordance with the Rounding-Off Method specified in ASTM E29–90, Standard Practice for Using Significant Digits in Test Data to Determine Conformance with Specifications (incorporated by reference; see § 86.1).

(5)(i) Paragraphs (b)(5)(i) (A) and (B) of this section apply only to manufacturers electing to participate in the particulate averaging program.

(A) If a manufacturer chooses to change the level of any family particulate emission limit(s), compliance with the new limit(s) must be based upon existing certification data.

(B) The production-weighted average of the family particulate emission limits of all applicable engine families, rounded to two significant figures in accordance with the Rounding-Off Method specified in ASTM E29–90, Standard Practice for Using Significant Digits in Test Data to Determine Conformance with Specifications (incorporated by reference; see § 86.1), must comply with the particulate standards in § 86.099–9 (a)(1)(iv) or (d)(1)(iv), or the composite particulate

standard as defined in §86.094–2, as appropriate, at the end of the product year.

(ii) Paragraphs (b)(5)(ii) (A) and (B) of this section apply only to manufacturers electing to participate in the NO_X averaging program.

(A) If a manufacturer chooses to change the level of any family NO_X emission limit(s), compliance with the new limit(s) must be based upon existing certification data.

(B) The production-weighted average of the family FTP NO_X emission limits of all applicable engine families, rounded to two significant figures in accordance with the Rounding-Off Method specified in ASTM E29–90, Standard Practice for Using Significant Digits in Test Data to Determine Conformance with Specifications (incorporated by reference; see §86.1), must comply with the NO_X standards of §86.099–9(a)(1)(iii) (A) or (B), or the composite NO_X standard as defined in §86.094–2, at the end of the product year.

(b)(6) [Reserved]

(b)(7)(i) through (b)(7)(iii) [Reserved]. For guidance see §86.094–28.

(b)(7)(iv) The emission value for each evaporative emission data vehicle to compare with the standards shall be the adjusted emission value of §86.094–28 (b)(7)(iii) rounded to two significant figures in accordance with the Rounding-Off Method specified in ASTM E29–90, Standard Practice for Using Significant Digits in Test Data to Determine Conformance with Specifications (incorporated by reference; see §86.1).

(b)(8) through (c)(4)(iii)(B)(3) [Reserved]. For guidance see §86.094–28.

(c)(4)(iv) The emission values for each emission data engine to compare with the standards (or family emission limits, as appropriate) shall be the adjusted emission values of §86.094–28 (c)(4)(iii), rounded to the same number of significant figures as contained in the applicable standard in accordance with the Rounding-Off Method specified in ASTM E29–90, Standard Practice for Using Significant Digits in Test Data to Determine Conformance with Specifications (incorporated by reference; see §86.1).

(c)(5) through (d)(4) [Reserved]. For guidance see §86.094–28.

(d)(5) The emission level to compare with the standard shall be the adjusted emission level of §86.094–28 (d)(4). Before any emission value is compared with the standard it shall be rounded to two significant figures, in accordance with the Rounding-Off Method specified in ASTM E29–90, Standard Practice for Using Significant Digits in Test Data to Determine Conformance with Specifications (incorporated by reference; see §86.1). The rounded emission values may not exceed the standard.

(6) Every test vehicle of an evaporative emission family must comply with the evaporative emission standard, as determined in paragraph (d)(5) of this section, before any vehicle in that family may be certified.

(e) through (h) [Reserved]. For guidance see §86.098–28.

[61 FR 54884, Oct. 22, 1996]

EFFECTIVE DATE NOTE: At 61 FR 54884, Oct. 22, 1996, §86.000–28 was added. This section contains information collection and recordkeeping requirements and will not become effective until approval has been given by the Office of Management and Budget.

§86.001–2 Definitions.

The definitions of §86.000–2 continue to apply to 2000 and later model year vehicles. The definitions listed in this section apply beginning with the 2001 model year.

Useful life means:

(1) For light-duty vehicles, and for light light-duty trucks not subject to the Tier 0 standards of §86.094–9(a), intermediate useful life and/or full useful life. Intermediate useful life is a period of use of 5 years or 50,000 miles, whichever occurs first. Full useful life is a period of use of 10 years or 100,000 miles, whichever occurs first, except as otherwise noted in §86.094–9. The useful life of evaporative and/or refueling emission control systems on the portion of these vehicles subject to the evaporative emission test requirements of §86.130–96, and/or the refueling emission test requirements of §86.151–2001, is defined as a period of use of 10 years or 100,000 miles, whichever occurs first.

(2) For light light-duty trucks subject to the Tier 0 standards of §86.094–9(a), and for heavy light-duty truck engine families, intermediate and/or full

useful life. Intermediate useful life is a period of use of 5 years or 50,000 miles, whichever occurs first. Full useful life is a period of use of 11 years or 120,000 miles, whichever occurs first. The useful life of evaporative emission and/or refueling control systems on the portion of these vehicles subject to the evaporative emission test requirements of § 86.130–96, and/or the refueling emission test requirements of § 86.151–2001, is also defined as a period of 11 years or 120,000 miles, whichever occurs first.

(3) For an Otto-cycle heavy-duty engine family:

(i) For hydrocarbon and carbon monoxide standards, a period of use of 8 years or 110,000 miles, whichever first occurs.

(ii) For the oxides of nitrogen standard, a period of use of 10 years or 110,000 miles, whichever first occurs.

(iii) For the portion of evaporative emission control systems subject to the evaporative emission test requirements of § 86.1230–96, a period of use of 10 years or 110,000 miles, whichever occurs first.

(4) For a diesel heavy-duty engine family:

(i) For light heavy-duty diesel engines, for hydrocarbon, carbon monoxide, and particulate standards, a period of use of 8 years or 110,000 miles, whichever first occurs.

(ii) For light heavy-duty diesel engines, for the oxides of nitrogen standard, a period of use of 10 years or 110,000 miles, whichever first occurs.

(iii) For medium heavy-duty diesel engines, for hydrocarbon, carbon monoxide, and particulate standards, a period of use of 8 years or 185,000 miles, whichever first occurs.

(iv) For medium heavy-duty diesel engines, for the oxides of nitrogen standard, a period of use of 10 years or 185,000 miles, whichever first occurs.

(v) For heavy heavy-duty diesel engines, for hydrocarbon, carbon monoxide, and particulate standards, a period of use of 8 years or 290,000 miles, whichever first occurs, except as provided in paragraph (4)(vii) of this definition.

(vi) For heavy heavy-duty diesel engines, for the oxides of nitrogen standard, a period of use of 10 years or 290,000 miles, whichever first occurs.

(vii) For heavy heavy-duty diesel engines used in urban buses, for the particulate standard, a period of use of 10 years or 290,000 miles, whichever first occurs.

[59 FR 16281, Apr. 6, 1994, as amended at 61 FR 54886, Oct. 22, 1996]

§ 86.001–9 Emission standards for 2001 and later model year light-duty trucks

Section 86.001–9 includes text that specifies requirements that differ from § 86.097–9, § 86.099–9 or § 86.000–9. Where a paragraph in § 86.097–9, § 86.099–9 or § 86.000–9 is identical and applicable to § 86.001–9, this may be indicated by specifying the corresponding paragraph and the statement ''[Reserved]. For guidance see § 86.097–9.'' or ''[Reserved]. For guidance see § 86.099–9.'' or ''[Reserved]. For guidance see § 86.000–9.''

(a)(1) introductory text through (a)(1)(iii) [Reserved]. For guidance see § 86.097–9.

(a)(1)(iv) through (b)(4) [Reserved]. For guidance see § 86.099–9.

(b)(5) [Reserved]

(b)(6) Vehicles certified to the refueling standards set forth in paragraph (d) of this section are not required to demonstrate compliance with the fuel dispensing spitback standards contained in § 86.096–9 (b)(1)(iii) and (b)(2)(iii): Provided, that they meet the requirements of § 86.001–28(f).

(c) [Reserved]. For guidance see § 86.097–9.

(d) Refueling emissions from 2001 and later model year gasoline-fueled and methanol-fueled Otto-cycle and petroleum-fueled and methanol-fueled diesel-cycle light duty trucks of 6,000 pounds or less GVWR shall not exceed the following standards. The standards apply equally to certification and in-use vehicles.

(1) Standards—(i) Hydrocarbons (for gasoline-fueled Otto-cycle and petroleum-fueled diesel-cycle vehicles). 0.20 gram per gallon (0.053 gram per liter) of fuel dispensed.

(ii) Total Hydrocarbon Equivalent (for methanol-fueled vehicles). 0.20 gram per gallon (0.053 gram per liter) of fuel dispensed.

(iii) Hydrocarbons (for liquefied petroleum gas-fueled vehicles). 0.15 gram

per gallon (0.04 gram per liter) of fuel dispensed.

(iv) Refueling receptacle (for natural gas-fueled vehicles). Refueling receptacles on natural gas-fueled vehicles shall comply with the receptacle provisions of the ANSI/AGA NGV1–1994 standard (as incorporated by reference in §86.1).

(2)(i) The standards set forth in paragraphs (d)(1)(i) and (ii) of this section refer to a sample of refueling emissions collected under the conditions as set forth in subpart B of this part and measured in accordance with those procedures.

(ii) For vehicles powered by petroleum-fueled diesel-cycle engines, the provisions set forth in paragraph (d)(1)(i) of this section may be waived: Provided, that the manufacturer complies with the provisions of §86.001–28(f).

(3) A minimum of the percentage shown in table A01–09 of a manufacturer's sales of the applicable model year's gasoline- and methanol-fueled Otto-cycle and petroleum-fueled and methanol-fueled diesel-cycle light-duty trucks of 6,000 pounds or less GVWR shall be tested under the procedures in subpart B of this part indicated for 2001 and later model years, and shall not exceed the standards described in paragraph (d)(1) of this section. Vehicles certified in accordance with paragraph (d)(2)(ii) of this section, as determined by the provisions of §86.001–28(g), shall not be counted in the calculation of the percentage of compliance:

TABLE A01–09—IMPLEMENTATION SCHEDULE FOR LIGHT-DUTY TRUCK REFUELING EMISSION TESTING

Model year	Sales percentage
2001	40
2002	80
2003 and subsequent	100

(e) [Reserved]. For guidance see §86.000–9.

(f) [Reserved]

(g) through (k) [Reserved]. For guidance see §86.097–9.

[61 FR 54886, Oct. 22, 1996]

EFFECTIVE DATE NOTE: At 61 FR 54886, Oct. 22, 1996, §86.001–9 was revised. This section contains information collection and recordkeeping requirements and will not become effective until approval has been given by the Office of Management and Budget.

§86.001–21 Application for certification.

Section 86.001–21 includes text that specifies requirements that differ from §86.094–21 or §86.096–21. Where a paragraph in §86.094–21 or §86.096–21 is identical and applicable to §86.001–21, this may be indicated by specifying the corresponding paragraph and the statement ''[Reserved]. For guidance see §86.094–21.'' or ''[Reserved]. For guidance see §86.096–21.''

(a) through (b)(1)(i)(B) [Reserved]. For guidance see §86.094–21.

(b)(1)(i)(C) The manufacturer must submit a Statement of Compliance in the application for certification which attests to the fact that they have assured themselves that the engine family is designed to comply with the intermediate temperature cold testing criteria of subpart C of this part, and does not unnecessarily reduce emission control effectiveness of vehicles operating at high altitude or other conditions not experienced within the US06 (aggressive driving) and SC03 (air conditioning) test cycles.

(b)(1)(i)(C)(*1*) through (b)(1)(ii)(C) [Reserved]. For guidance see §86.094–21.

(b)(2) Projected U.S. sales data sufficient to enable the Administrator to select a test fleet representative of the vehicles (or engines) for which certification is requested, and data sufficient to determine projected compliance with the standards implementation schedules of §86.000–8 and 86.000–9. Volume projected to be produced for U.S. sale may be used in lieu of projected U.S. sales.

(b)(3) A description of the test equipment and fuel proposed to be used.

(b)(4)(i) For light-duty vehicles and light-duty trucks, a description of the test procedures to be used to establish the evaporative emission and/or refueling emission deterioration factors, as appropriate, required to be determined and supplied in §86.001–23(b)(2).

(b)(4)(ii) through (b)(5)(iv) [Reserved]. For guidance see §86.094–21.

(b)(5)(v) For light-duty vehicles and applicable light-duty trucks with non-integrated refueling emission control systems, the number of continuous

UDDS cycles, determined from the fuel economy on the UDDS applicable to the test vehicle of that evaporative/refueling emission family-emission control system combination, required to use a volume of fuel equal to 85% of fuel tank volume.

(b)(6) through (b)(8) [Reserved]. For guidance see § 86.094–21.

(b)(9) For each light-duty vehicle, light-duty truck, evaporative/refueling emission family or heavy-duty vehicle evaporative emission family, a description of any unique procedures required to perform evaporative and/or refueling emission tests, as applicable, (including canister working capacity, canister bed volume, and fuel temperature profile for the running loss test) for all vehicles in that evaporative and/or evaporative/refueling emission family, and a description of the method used to develop those unique procedures.

(10) For each light-duty vehicle or applicable light-duty truck evaporative/refueling emission family, or each heavy-duty vehicle evaporative emission family:

(i) Canister working capacity, according to the procedures specified in § 86.132–96(h)(1)(iv);

(ii) Canister bed volume; and

(iii) Fuel temperature profile for the running loss test, according to the procedures specified in § 86.129–94(d).

(c) through (j) [Reserved]. For guidance see § 86.094–21.

(k) and (l) [Reserved]. For guidance see § 86.096–21.

[61 FR 54886, Oct. 22, 1996]

EFFECTIVE DATE NOTE: At 61 FR 54886, Oct. 22, 1996, § 86.001–21 was revised. This section contains information collection and recordkeeping requirements and will not become effective until approval has been given by the Office of Management and Budget.

§ 86.001–22 Approval of application for certification; test fleet selections; determinations of parameters subject to adjustment for certification and Selective Enforcement Audit, adequacy of limits, and physically adjustable ranges.

Section 86.001–22 includes text that specifies requirements that differ from § 86.094–22. Where a paragraph in § 86.094–22 is identical and applicable to § 86.001–22, this may be indicated by specifying the corresponding paragraph and the statement ''[Reserved]. For guidance see § 86.094–22.''.

(a) through (c) [Reserved]. For guidance see § 86.094–22.

(d) *Approval of test procedures.* (1) The Administrator does not approve the test procedures for establishing the evaporative or refueling emission deterioration factors for light-duty vehicles and light-duty trucks. The manufacturer shall submit the procedures as required in § 86.098–21(b)(4)(i) prior to the Administrator's selection of the test fleet under § 86.098–24(b)(1), and if such procedures will involve testing of durability data vehicles selected by the Administrator or elected by the manufacturer under § 86.098–24(c)(1), prior to initiation of such testing.

(d)(2) through (g) [Reserved]. For guidance see § 86.094–22.

[59 FR 16283, Apr. 6, 1994]

§ 86.001–23 Required data.

Section 86.001–23 includes text that specifies requirements that differ from § 86.095–23, § 86.098–23 or § 86.000–23. Where a paragraph in § 86.095–23, § 86.098–23 or § 86.000–23 is identical and applicable to § 86.001–23, this may be indicated by specifying the corresponding paragraph and the statement ''[Reserved]. For guidance see § 86.095–23.'' or ''[Reserved]. For guidance see § 86.098–23.'' or ''[Reserved]. For guidance see § 86.000–23.''

(a) through (b)(1) [Reserved]. For guidance see § 86.098–23.

(b)(2) For light-duty vehicles and light-duty trucks, the manufacturer shall submit evaporative emission and/or refueling emission deterioration factors for each evaporative/refueling emission family-emission control system combination and all test data that are derived from testing described under § 86.001–21(b)(4)(i) designed and conducted in accordance with good engineering practice to assure that the vehicles covered by a certificate issued under § 86.001–30 will meet the evaporative and/or refueling emission standards in § 86.099–8 or § 86.001–9, as appropriate, for the useful life of the vehicle.

(b)(3) and (b)(4) [Reserved]. For guidance see § 86.098–23.

(c)(1) [Reserved]. For guidance see § 86.095–23.

(c)(2) through (e)(1) [Reserved]. For guidance see §86.098–23.

(e)(2) For evaporative and refueling emissions durability, or light-duty truck or HDE exhaust emissions durability, a statement of compliance with paragraph (b)(2) of this section or §86.098–23 (b)(1)(ii), (b)(3), or (b)(4) as applicable.

(3) For certification of vehicles with non-integrated refueling systems, a statement that the drivedown used to purge the refueling canister was the same as described in the manufacturer's application for certification. Furthermore, a description of the procedures used to determine the number of equivalent UDDS miles required to purge the refueling canisters, as determined by the provisions of §86.001–21(b)(5)(v) and subpart B of this part. Furthermore, a written statement to the Administrator that all data, analyses, test procedures, evaluations and other documents, on which the above statement is based, are available to the Administrator upon request.

(f) and (g) [Reserved]. For guidance see §86.095–23.

(h) through (m) [Reserved]. For guidance see §86.098–23.

[61 FR 54887, Oct. 22, 1996, as amended at 62 FR 54720, Oct. 21, 1997]

EFFECTIVE DATE NOTE: At 61 FR 54887, Oct. 22, 1996, §86.001–23 was revised. This section contains information collection and recordkeeping requirements and will not become effective until approval has been given by the Office of Management and Budget.

§86.001–24 Test vehicles and engines.

Section 86.001–24 includes text that specifies requirements that differ from §86.096–24, §86.098–24 or §86.000–24. Where a paragraph in §86.096–24, §86.098–24 or §86.000–9 is identical and applicable to §86.001–24, this may be indicated by specifying the corresponding paragraph and the statement ''[Reserved]. For guidance see §86.096–24.'' or ''[Reserved]. For guidance see §86.098–24.'' or ''[Reserved]. For guidance see §86.000–24.''

(a) through (a)(4) [Reserved]. For guidance see §86.096–24.

(a)(5) through (a)(7) [Reserved]. For guidance see §86.098–24.

(a)(8) through (b)(1) introductory text [Reserved]. For guidance see §86.096–24.

(b)(1)(i) through (b)(1)(ii) [Reserved]. For guidance see §86.000–24.

(b)(1)(iii) through (b)(1)(vi) [Reserved]. For guidance see §86.096–24.

(b)(1)(vii)(A) through (b)(1)(viii)(A) [Reserved]. For guidance see §86.098–24.

(b)(1)(viii)(B) through (e)(2) [Reserved]. For guidance see §86.096–24.

(f) Carryover and carryacross of durability and emission data. In lieu of testing an emission-data or durability vehicle (or engine) selected under §86.096–24(b)(1) introductory text, (b)(1)(iii) through (b)(1)(vi) and §86.000–24(b)(1)(i) through (b)(1)(ii) and §86.098–24(b)(1)(vii)(A) through (b)(1)(viii)(A) or §86.096–24(c), and submitting data therefor, a manufacturer may, with the prior written approval of the Administrator, submit exhaust emission data, evaporative emission data and/or refueling emission data, as applicable, on a similar vehicle (or engine) for which certification has been obtained or for which all applicable data required under §86.001–23 has previously been submitted.

(g)(1) through (g)(2) [Reserved]. For guidance see §86.096–24.

(g)(3) through (g)(4) [Reserved]. For guidance see §86–000–24.

(h) [Reserved]. For guidance see §86.096–24.

[61 FR 54887, Oct. 22, 1996]

EFFECTIVE DATE NOTE: At 61 FR 54887, Oct. 22, 1996, §86.001–24 was revised. This section contains information collection and recordkeeping requirements and will not become effective until approval has been given by the Office of Management and Budget.

§86.001–25 Maintenance.

Section 86.001–25 includes text that specifies requirements that differ from §86.094–25 or §86.098–25. Where a paragraph in §86.094–25 or §86.098–25 is identical and applicable to §86.001–25, this may be indicated by specifying the corresponding paragraph and the statement ''[Reserved]. For guidance see §86.094–25.'' or ''[Reserved]. For guidance see §86.098–25.''

(a)(1) Applicability. This section applies to light-duty vehicles, light-duty trucks, and heavy-duty engines.

(2) Maintenance performed on vehicles, engines, subsystems, or components used to determine exhaust, evaporative or refueling emission deterioration factors, as appropriate, is classified as either emission-related or non-emission-related and each of these can be classified as either scheduled or unscheduled. Further, some emission-related maintenance is also classified as critical emission-related maintenance.

(b) introductory text through (b)(3)(vi)(D) [Reserved]. For guidance see § 86.094–25.

(b)(3)(vi)(E) through (b)(3)(vi)(J) [Reserved]. For guidance see § 86.098–25.

(b)(3)(vii) through (b)(6)(i)(E) [Reserved]. For guidance see § 86.094–25.

(b)(6)(i)(F) [Reserved]. For guidance see § 86.098–25.

(b)(6)(i)(G) through (H) [Reserved]. For guidance see § 86.094–25.

(i) [Reserved]. For guidance see § 86.000–25.

[61 FR 54887, Oct. 22, 1996]

EFFECTIVE DATE NOTE: At 61 FR 54887, Oct. 22, 1996, § 86.001–25 was revised. This section contains information collection and recordkeeping requirements and will not become effective until approval has been given by the Office of Management and Budget.

§ 86.001–26 Mileage and service accumulation; emission measurements.

Section 86.001–26 includes text that specifies requirements that differ from § 86.094–26, § 86.095–26, § 86.096–26, § 86.098–26 or § 86.000–26. Where a paragraph in § 86.094–26, § 86.095–26, § 86.096–26, § 86.098–26 or § 86.000–26 is identical and applicable to § 86.001–26, this may be indicated by specifying the corresponding paragraph and the statement ''[Reserved]. For guidance see § 86.094–26.'' or ''[Reserved]. For guidance see § 86.095–26.'' or ''[Reserved]. For guidance see § 86.096–26.'' or ''[Reserved]. For guidance see § 86.098–26.'' or ''[Reserved]. For guidance see § 86.000–26.''

(a)(1) [Reserved]. For guidance see § 86.094–26.

(a)(2) through (a)(3)(i)(A) [Reserved]. For guidance see § 86.000–26.

(a)(3)(i)(B) [Reserved]. For guidance see § 86.094–26.

(a)(3)(i)(C) [Reserved]. For guidance see § 86.098–26.

(a)(3)(i)(D) through (a)(3)(ii)(B) [Reserved]. For guidance see § 86.094–26.

(a)(3)(ii)(C) [Reserved]. For guidance see § 86.098–26.

(a)(3)(ii)(D) through (a)(4)(i)(B)(*4*) [Reserved]. For guidance see § 86.094–26.

(a)(4)(i)(C) [Reserved]. For guidance see § 86.000–26.

(a)(4)(i)(D) through (a)(6)(ii) [Reserved]. For guidance see § 86.094–26.

(a)(6)(iii) [Reserved]. For guidance see § 86.000–26.

(a)(7) through (a)(9)(i) [Reserved]. For guidance see § 86.094–26.

(a)(9)(ii) [Reserved]. For guidance see § 86.000–26.

(a)(9)(iii) through (b)(2) introductory text [Reserved]. For guidance see § 86.094–26.

(b)(2)(i) through (b)(2)(ii) [Reserved]. For guidance see § 86.000–26.

(b)(2)(iii) [Reserved]. For guidance see § 86.094–26.

(b)(2)(iv) Service or mileage accumulation which may be part of the test procedures used by the manufacturer to establish evaporative and/or refueling emission deterioration factors.

(b)(3) through (b)(4)(i)(B) [Reserved]. For guidance see § 86.094–26.

(b)(4)(i)(C) Exhaust, evaporative and/or refueling emission tests for emission-data vehicle(s) selected for testing under § 86.096–24(b)(1)(ii), (iii) or (iv)(A) or § 86.098–24(b)(1)(vii) shall be conducted at the mileage (2,000 mile minimum) at which the engine-system combination is stabilized for emission testing or at 6,436 kilometer (4,000 mile) test point under low-altitude conditions.

(b)(4)(i)(D) through (b)(4)(ii)(B) [Reserved]. For guidance see § 86.095–26.

(b)(4)(ii)(C) Exhaust, evaporative and/or refueling emission tests for emission data vehicle(s) selected for testing under § 86.094–24(b)(1)(ii), (iii), and (iv) shall be conducted at the mileage (2,000 mile minimum) at which the engine-system combination is stabilized for emission testing or at the 6,436 kilometer (4,000 mile) test point under low-altitude conditions.

(b)(4)(ii)(D) [Reserved]. For guidance see § 86.095–26.

(b)(4)(iii) [Reserved]

(b)(4)(iv) through (c)(3) [Reserved]. For guidance see § 86.094–26.

(c)(4) [Reserved]. For guidance see § 86.096–26.

(d) through (d)(2)(i) [Reserved]. For guidance see §86.094–26.

(d)(2)(ii) [Reserved]. For guidance see §86.000–26.

(d)(3) through (d)(6) [Reserved]. For guidance see §86.094–26.

[61 FR 54888, Oct. 22, 1996]

EFFECTIVE DATE NOTE: At 61 FR 54888, Oct. 22, 1996, §86.001–26 was revised. This section contains information collection and recordkeeping requirements and will not become effective until approval has been given by the Office of Management and Budget.

§86.001–28 Compliance with emission standards.

Section 86.001–28 includes text that specifies requirements that differ from §86.094–28, §86.098–28 or §86.000–28. Where a paragraph in §86.094–28, §86.098–28 or §86.000–28 is identical and applicable to §86.001–28, this may be indicated by specifying the corresponding paragraph and the statement ''[Reserved]. For guidance see §86.094–28.'' or ''[Reserved]. For guidance see §86.098–28.'' or ''[Reserved]. For guidance see §86.000–28.''

(a)(1) through (a)(2) [Reserved]. For guidance see §86.000–28.

(a)(3) [Reserved]. For guidance see §86.094–28.

(a)(4) [Reserved]. For guidance see §86.098–28.

(a)(4)(i) introductory text [Reserved]. For guidance see §86.000–28.

(a)(4)(i)(A) through (a)(4)(i)(B)(*2*)(*i*) [Reserved]. For guidance see §86.094–28.

(a)(4)(i)(B)(*2*)(*ii*) [Reserved]. For guidance see §86.000–28.

(a)(4)(i)(B)(*2*)(*iii*) through (a)(4)(i)(B)(*2*)(*iv*) [Reserved]. For guidance see §86.094–28.

(a)(4)(i)(C) through (a)(4)(i)(D)(*2*) [Reserved]. For guidance see §86.098–28.

(a)(4)(ii)(A)(*1*) through (a)(4)(ii)(A)(*2*) [Reserved]. For guidance see §86.000–28.

(a)(4)(ii)(B) through (a)(4)(ii)(C) [Reserved]. For guidance see §86.098–28.

(a)(4)(iii) [Reserved]. For guidance see §86.000–28.

(a)(4)(iv) [Reserved]. For guidance see §86.094–28.

(a)(4)(v) [Reserved]. For guidance see §86.098–28.

(a)(5) through (a)(6) [Reserved]. For guidance see §86.094–28.

(a)(7) introductory text [Reserved]. For guidance see §86.098–28.

(a)(7)(i) [Reserved]. For guidance see §86.000–28.

(a)(7)(ii) [Reserved]. For guidance see §86.094–28.

(b)(1) This paragraph (b) applies to light-duty trucks.

(2) Each exhaust, evaporative and refueling emission standard (and family emission limits, as appropriate) of §86.001–9 applies to the emissions of vehicles for the appropriate useful life as defined in §§86.098–2 and 86.001–9.

(b)(3) through (b)(4)(i) [Reserved]. For guidance see §86.094–28.

(b)(4)(ii) through (b)(6) [Reserved]. For guidance see §86.000–28.

(b)(7)(i) This paragraph (b)(7) describes the procedure for determining compliance of a new vehicle with evaporative emission standards. The procedure described here shall be used for all vehicles in applicable model years.

(ii) The manufacturer shall determine, based on testing described in §86.001–21(b)(4)(i)(A), and supply an evaporative emission deterioration factor for each evaporative/refueling emission family-emission control system combination. The factor shall be calculated by subtracting the emission level at the selected test point from the emission level at the useful life point.

(iii) The official evaporative emission test results for each evaporative/refueling emission-data vehicle at the selected test point shall be adjusted by the addition of the appropriate deterioration factor. However, if the deterioration factor supplied by the manufacturer is less than zero, it shall be zero for the purposes of this paragraph (b)(7)(iii).

(iv) The evaporative emission value for each emission-data vehicle to compare with the standards shall be the adjusted emission value of paragraph (b)(7)(iii) of this section rounded to two significant figures in accordance with the Rounding-Off Method specified in ASTM E29–90, Standard Practice for Using Significant Digits in Test Data to Determine Conformance with Specifications (incorporated by reference; see §86.1).

(8)(i) This paragraph (b)(8) describes the procedure for determining compliance of a new vehicle with refueling

emission standards. The procedure described here shall be used for all applicable vehicles in the applicable model years.

(ii) The manufacturer shall determine, based on testing described in § 86.001–21(b)(4)(i)(B), and supply a refueling emission deterioration factor for each evaporative/refueling emission family-emission control system combination. The factor shall be calculated by subtracting the emission level at the selected test point from the emission level at the useful life point.

(iii) The official refueling emission test results for each evaporative/refueling emission-data vehicle at the selected test point shall be adjusted by the addition of the appropriate deterioration factor. However, if the deterioration factor supplied by the manufacturer is less than zero, it shall be zero for the purposes of this paragraph (b)(8)(iii).

(iv) The emission value for each evaporative emission-data vehicle to compare with the standards shall be the adjusted emission value of paragraph (b)(8)(iii) of this section rounded to two significant figures in accordance with the Rounding-Off Method specified in ASTM E29–90, Standard Practice for Using Significant Digits in Test Data to Determine Conformance with Specifications (incorporated by reference; see § 86.1).

(9) Every test vehicle of an engine family must comply with all applicable standards (and family emission limits, as appropriate), as determined in § 86.000–28(b)(4)(iv) and paragraphs (b)(7)(iv) and (b)(8)(iv) of this section, before any vehicle in that family will be certified.

(c) Introductory text through (c)(4)(iii)(B)(*3*) [Reserved]. For guidance see § 86.094–28.

(c)(4)(iv) [Reserved]. For guidance see § 86.000–28.

(c)(5) through (d)(4) [Reserved]. For guidance see § 86.094–28.

(d)(5) through (d)(6) [Reserved]. For guidance see § 86.000–28.

(e) [Reserved]

(f) Fuel dispensing spitback testing waiver. (1) Vehicles certified to the refueling emission standards set forth in § 86.098–8, 86.099–8 and 86.001–9 are not required to demonstrate compliance with the fuel dispensing spitback standards contained in these sections: Provided, that—

(i) The manufacturer certifies that the vehicle inherently meets the Dispensing Spitback Standard as part of compliance with the refueling emission standard.

(ii) This certification is provided in writing and applies to the full useful life of the vehicle.

(2) EPA retains the authority to require testing to enforce compliance and to prevent non-compliance with the Fuel Dispensing Spitback Standard.

(g) Inherently low refueling emission testing waiver. (1) Vehicles using fuels/fuel systems inherently low in refueling emissions are not required to conduct testing to demonstrate compliance with the refueling emission standards set forth in §§ 86.098–8, 86.099–8 or 86.001–9: Provided, that—

(i) This provision is only available for petroleum diesel fuel. It is only available if the Reid Vapor Pressure of in-use diesel fuel is equal to or less than 1 psi (7 Kpa) and for diesel vehicles whose fuel tank temperatures do not exceed 130 °F (54 °C); and

(ii) To certify using this provision the manufacturer must attest to the following evaluation: ''Due to the low vapor pressure of diesel fuel and the vehicle tank temperatures, hydrocarbon vapor concentrations are low and the vehicle meets the 0.20 grams/gallon refueling emission standard without a control system.''

(2) The certification required in paragraph (g)(1)(ii) of this section must be provided in writing and must apply for the full useful life of the vehicle.

(3) EPA reserves the authority to require testing to enforce compliance and to prevent noncompliance with the refueling emission standard.

(4) Vehicles certified to the refueling emission standard under this provision shall not be counted in the sales percentage compliance determinations for the 2001, 2002 and subsequent model years.

(h) Fixed liquid level gauge waiver. Liquefied petroleum gas-fueled vehicles which contain fixed liquid level gauges or other gauges or valves which can be opened to release fuel or fuel vapor

during refueling, and which are being tested for refueling emissions, are not required to be tested with such gauges or valves open, as outlined in §86.157–98(d)(2), provided the manufacturer can demonstrate, to the satisfaction of the Administrator, that such gauges or valves would not be opened during refueling in-use due to inaccessibility or other design features that would prevent or make it very unlikely that such gauges or valves could be opened.

[61 FR 54888, Oct. 22, 1996]

EFFECTIVE DATE NOTE: At 61 FR 54888, Oct. 22, 1996, §86.001–28 was revised. This section contains information collection and recordkeeping requirements and will not become effective until approval has been given by the Office of Management and Budget.

§86.001–30 Certification.

Section 86.001–30 includes text that specifies requirements that differ from §86.094–30, §86.095–30 or §86.098–30. Where a paragraph in §86.094–30, §86.095–30 or §86.098–30 is identical and applicable to §86.001–30, this may be indicated by specifying the corresponding paragraph and the statement ''[Reserved]. For guidance see §86.094–30.'' or ''[Reserved]. For guidance see §86.095–30.'' or ''[Reserved]. For guidance see §86.098–30.''.

(a)(1) and (a)(2) [Reserved]. For guidance see §86.094–30.

(a)(3)(i) [Reserved]. For guidance see §86.098–30.

(a)(3)(ii) through (a)(4)(ii) [Reserved]. For guidance see §86.095–30.

(a)(4)(iii) introductory text through (a)(4)(iii)(C) [Reserved]. For guidance see §86.094–30.

(a)(4)(iv) introductory text [Reserved]. For guidance see §86.095–30.

(a)(4)(iv)(A) through (a)(9) [Reserved]. For guidance see §86.094–30.

(a)(10) and (a)(11) [Reserved]. For guidance see §86.098–30.

(a)(12) [Reserved]. For guidance see §86.094–30.

(a)(13) [Reserved]. For guidance see §86.095–30.

(a)(14) [Reserved]. For guidance see §86.094–30.

(a) (15) through (18) [Reserved]. For guidance see §86.096–30.

(a)(19) [Reserved]. For guidance see §86.098–30.

(a)(20) For all light-duty trucks certified to refueling emission standards under §86.001–9, the provisions of paragraphs (a)(20) (i) through (iii) this section apply.

(i) All certificates issued are conditional upon the manufacturer complying with all provisions of §86.001–9 both during and after model year production.

(ii) Failure to meet the required implementation schedule sales percentages as specified in §86.001–9 will be considered to be a failure to satisfy the conditions upon which the certificate(s) was issued and the individual vehicles sold in violation of the implementation schedule shall not be covered by the certificate.

(iii) The manufacturer shall bear the burden of establishing to the satisfaction of the Administrator that the conditions upon which the certificate was issued were satisfied.

(b)(1) introductory text through (b)(1)(i) [Reserved]. For guidance see §86.094–30.

(b)(1)(ii)(A) [Reserved]. For guidance see §86.094–30.

(b)(1)(ii)(B) The emission data vehicle(s) selected under §86.001–24(b)(vii)(A) and (B) shall represent all vehicles of the same evaporative/refueling control system within the evaporative/refueling family.

(b)(1)(ii)(C) [Reserved]. For guidance see §86.094–30.

(b)(1)(ii)(D) The emission-data vehicle(s) selected under §86.098–24(b)(1)(viii) shall represent all vehicles of the same evaporative/refueling control system within the evaporative/refueling emission family, as applicable.

(b)(1) (iii) and (iv) [Reserved]. For guidance see §86.094–30.

(b)(2) [Reserved]. For guidance see §86.098–30.

(b)(3) through (b)(4)(i) [Reserved]. For guidance see §86.094–30.

(b)(4)(ii) introductory text [Reserved]. For guidance see §86.098–30.

(b)(4)(ii)(A) [Reserved]. For guidance see §86.094–30.

(b)(4)(ii)(B) through (iv) [Reserved]. For guidance see §86.098–30.

(b)(5) through (e) [Reserved]. For guidance see §86.094–30.

(f) introductory text through (f)(3) [Reserved]. For guidance see §86.095–30.

(f)(4) [Reserved]. For guidance see § 86.098–30.

[59 FR 16285, Apr. 6, 1994, as amended at 62 FR 54720, Oct. 21, 1997]

§ 86.001–35 Labeling.

Section 86.001–35 includes text that specifies requirements that differ from § 86.095–35, § 86.096–35 and § 86.098–35. Where a paragraph in § 86.095–35, § 86.096–35 or § 86.098–35 is identical and applicable to § 86.001–35, this may be indicated by specifying the corresponding paragraph and the statement ''[Reserved]. For guidance see § 86.095–35.'' or [Reserved]. For guidance see § 86.096–35. or ''[Reserved]. For guidance see § 86.098–28.''.

(a) introductory text through (a)(1)(iii)(B) [Reserved]. For guidance see § 86.095–35.

(a)(1)(iii)(C) [Reserved]. For guidance see § 86.098–35.

(a)(1)(iii)(D) through (L) [Reserved]. For guidance see § 86.095–35.

(a)(1)(iii)(M) [Reserved]. For guidance see § 86.098–35.

(a)(1)(iii)(N) [Reserved]. For guidance see § 86.096–35.

(a)(2) heading through (a)(2)(iii)(B) [Reserved]. For guidance see § 86.095–35.

(a)(2)(iii)(C) Engine displacement (in cubic inches or liters), engine family identification and evaporative/refueling family identification.

(a)(2)(iii)(D) through (a)(2)(iii)(E) [Reserved]. For guidance see § 86.095–35.

(a)(2)(iii)(F) [Reserved]

(a)(2)(iii)(G) through (a)(2)(iii)(K) [Reserved]. For guidance see § 86.095–35.

(a)(2)(iii)(L) [Reserved]

(a)(2)(iii)(M) through (a)(2)(iii)(N) [Reserved]. For guidance see § 86.095–35.

(a)(2)(iii) (O) through (P) [Reserved]. For guidance see § 86.096–35.

(a)(3) heading through (a)(4)(iii)(F) [Reserved]. For guidance see § 86.095–35.

(a)(4)(ii)(G) [Reserved]. For guidance see § 86.096–35.

(b) through (i) [Reserved]. For guidance see § 86.095–35.

[59 FR 16285, Apr. 6, 1994]

§ 86.004–2 Definitions.

The definitions of § 86.001–2 continue to apply to 2001 and later model year vehicles. The definitions listed in this section apply beginning with the 2004 model year.

Useful life means:

(1) For light-duty vehicles, and for light light-duty trucks not subject to the Tier 0 standards of § 86.094–9(a), intermediate useful life and/or full useful life. Intermediate useful life is a period of use of 5 years or 50,000 miles, whichever occurs first. Full useful life is a period of use of 10 years or 100,000 miles, whichever occurs first, except as otherwise noted in § 86.094–9. The useful life of evaporative and/or refueling emission control systems on the portion of these vehicles subject to the evaporative emission test requirements of § 86.130–96, and/or the refueling emission test requirements of § 86.151–98, is defined as a period of use of 10 years or 100,000 miles, whichever occurs first.

(2) For light light-duty trucks subject to the Tier 0 standards of § 86.094–9(a), and for heavy light-duty truck engine families, intermediate and/or full useful life. Intermediate useful life is a period of use of 5 years or 50,000 miles, whichever occurs first. Full useful life is a period of use of 11 years or 120,000 miles, whichever occurs first. The useful life of evaporative emission and/or refueling control systems on the portion of these vehicles subject to the evaporative emission test requirements of § 86.130–96, and/or the refueling emission test requirements of § 86.151–98, is also defined as a period of 11 years or 120,000 miles, whichever occurs first.

(3) For an Otto-cycle HDE family:

(i) For hydrocarbon and carbon monoxide standards, a period of use of 10 years or 110,000 miles, whichever first occurs.

(ii) For the oxides of nitrogen standard, a period of use of 10 years or 110,000 miles, whichever first occurs.

(iii) For the portion of evaporative emission control systems subject to the evaporative emission test requirements of § 86.1230–96, a period of use of 10 years or 110,000 miles, whichever first occurs.

(4) For a diesel HDE family:

(i) For light heavy-duty diesel engines, for carbon monoxide, particulate, and oxides of nitrogen plus nonmethane hydrocarbons emissions standards, a period of use of 10 years or 110,000 miles, whichever first occurs.

(ii) For medium heavy-duty diesel engines, for carbon monoxide, particulate, and oxides of nitrogen plus nonmethane hydrocarbons emission standards, a period of use of 10 years or 185,000 miles, whichever first occurs.

(iii) For heavy heavy-duty diesel engines, for carbon monoxide, particulate, and oxides of nitrogen plus nonmethane hydrocarbon emissions standards, a period of use of 10 years or 435,000 miles, or 22,000 hours, whichever first occurs, except as provided in paragraphs (4)(iv) and (4)(v) of this definition.

(iv) The useful life limit of 22,000 hours in paragraph (4)(iii) of this definition is effective as a limit to the useful life only when an accurate hours meter is provided by the manufacturer with the engine and only when such hours meter can reasonably be expected to operate properly over the useful life of the engine.

(v) For an individual engine, if the useful life hours limit of 22,000 hours is reached before the engine reaches 10 years or 100,000 miles, the useful life shall become 10 years or 100,000 miles, whichever occurs first, as required under Clean Air Act section 202(d).

(5) As an option for both light-duty trucks under certain conditions and HDE families, an alternative useful life period may be assigned by the Administrator under the provisions of §86.094–21(f).

Warranty period, for purposes of HDE emissions defect warranty and emissions performance warranty, shall be a period of 5 years/50,000 miles, whichever occurs first, for Otto-cycle HDEs and light heavy-duty diesel engines. For all other heavy-duty diesel engines the aforementioned period shall be 5 years/100,000 miles, whichever occurs first. However, in no case may this period be less than the basic mechanical warranty period that the manufacturer provides (with or without additional charge) to the purchaser of the engine. Extended warranties on select parts do not extend the emissions warranty requirements for the entire engine but only for those parts. In cases where responsibility for an extended warranty is shared between the owner and the manufacturer, the emissions warranty shall also be shared in the same manner as specified in the warranty agreement.

[62 FR 54720, Oct. 21, 1997]

§86.004–9 Emission standards for 2004 and later model year light-duty trucks.

Section 86.004–9 includes text that specifies requirements that differ from §86.097–9, §86.099–9, §86.000–9 or §86.001–9. Where a paragraph in §86.097–9, §86.099–9, §86.000–9 or §86.001–9 is identical and applicable to §86.004–9, this may be indicated by specifying the corresponding paragraph and the statement ''[Reserved]. For guidance see §86.097–9.'' or ''[Reserved]. For guidance see §86.099–9.'' or ''[Reserved]. For guidance see §86.000–9.'' or ''[Reserved]. For guidance see §86.001–9.''

(a)(1) introductory text through (a)(1)(iii) [Reserved]. For guidance see §86.097–9.

(a)(1)(iv) through (b)(4) [Reserved]. For guidance see §86.099–9.

(b)(5) [Reserved]

(b)(6) [Reserved]. For guidance see §86.001–9.

(c) [Reserved]. For guidance see §86.097–9.

(d) Refueling emissions from 2004 and later model year gasoline-fueled and methanol-fueled Otto-cycle and petroleum-fueled and methanol-fueled diesel-cycle light-duty trucks shall not exceed the following standards. The standards apply equally to certification and in-use vehicles.

(d)(1) through (d)(2)(ii) [Reserved]. For guidance see §86.001–9.

(d)(2)(iii) Heavy-duty vehicles certified as light-duty trucks under the provisions of §86.085–1 shall comply with the provisions of §86.001–9 (d)(1)(i) and (ii).

(3)(i) All light-duty trucks of a GVWR equal to 6,000 pounds or less (100%) must meet the refueling emission standard.

(ii) A minimum of the percentage shown in table A04–09 of a manufacturer's sales of the applicable model year's gasoline- and methanol-fueled Otto-cycle and petroleum-fueled and methanol-fueled diesel-cycle light-duty trucks of 6,001 to 8,500 pounds GVWR shall be tested under the procedures in subpart B of this part indicated for 2004

and later model years, and shall not exceed the standards described in § 86.001–9 (d)(1). Vehicles certified in accordance with § 86.001–9 (d)(2)(ii), as determined by the provisions of § 86.001–28(g), shall not be counted in the calculation of the percentage of compliance:

TABLE A04–09—IMPLEMENTATION SCHEDULE FOR LIGHT-DUTY TRUCK REFUELING EMISSION TESTING

Model year	Sales percentage
2004	40
2005	80
2006 and subsequent	100

(e) [Reserved]. For guidance see § 86.000–9.

(f) [Reserved]

(g) through (k) [Reserved]. For guidance see § 86.097–9.

[61 FR 54889, Oct. 22, 1996]

EFFECTIVE DATE NOTE: At 61 FR 54889, Oct. 22, 1996, § 86.004–9 was revised. This section contains information collection and recordkeeping requirements and will not become effective until approval has been given by the Office of Management and Budget.

§ 86.004–11 Emission standards for 2004 and later model year diesel heavy-duty engines and vehicles.

(a)(1) Exhaust emissions from new 2004 and later model year diesel HDEs shall not exceed the following:

(i)(A) Oxides of Nitrogen plus Non-methane Hydrocarbons (NO_X + NMHC) for engines fueled with either petroleum fuel, natural gas, or liquefied petroleum gas, 2.4 grams per brake horsepower-hour (0.89 gram per megajoule), as measured under transient operating conditions.

(B) Oxides of Nitrogen plus Non-methane Hydrocarbon Equivalent (NO_X + NMHCE) for engines fueled with methanol, 2.4 grams per brake horsepower-hour (0.89 gram per megajoule), as measured under transient operating conditions.

(C) *Optional standard.* Manufacturers may elect to certify to an Oxides of Nitrogen plus Non-methane Hydrocarbons (or equivalent for methanol-fueled engines) standard of 2.5 grams per brake horsepower-hour (0.93 gram per megajoule), as measured under transient operating conditions, provided that Non-methane Hydrocarbons (or equivalent for methanol-fueled engines) do not exceed 0.5 grams per brake horsepower-hour (0.19 gram per megajoule) NMHC (or NMHCE for methanol-fueled engines), as measured under transient operating conditions.

(D) A manufacturer may elect to include any or all of its diesel HDE families in any or all of the emissions ABT programs for HDEs, within the restrictions described in § 86.004–15 or superseding applicable sections. If the manufacturer elects to include engine families in any of these programs, the NO_X plus NMHC (or NO_X plus NMHCE for methanol-fueled engines) FELs may not exceed 4.5 grams per brake horsepower-hour (1.7 grams per megajoule). This ceiling value applies whether credits for the family are derived from averaging, banking, or trading programs. Additionally, families certified to the optional standard contained in paragraph (a)(1)(i)(C) of this section shall not exceed 0.50 grams per brake horsepower-hour (0.19 gram per megajoule) NMHC (or NMHCE for methanol-fueled engines) through the use of credits.

(E) No later than December 31, 1999, the Administrator shall review the emissions standards set forth in paragraph (a)(1)(i) of this section and determine whether these standards continue to be appropriate under the Act.

(ii) *Carbon monoxide.* (A) 15.5 grams per brake horsepower-hour (5.77 grams per megajoule), as measured under transient operating conditions.

(B) 0.50 percent of exhaust gas flow at curb idle (methanol-, natural gas-, and liquefied petroleum gas-fueled diesel HDEs only).

(iii) *Particulate.* (A) For diesel engines to be used in urban buses, 0.05 gram per brake horsepower-hour (0.019 gram per megajoule) for certification testing and selective enforcement audit testing, and 0.07 gram per brake horsepower-hour (0.026 gram per megajoule) for in-use testing, as measured under transient operating conditions.

(B) For all other diesel engines, 0.10 gram per brake horsepower-hour (0.037 gram per megajoule), as measured under transient operating conditions.

(C) A manufacturer may elect to include any or all of its diesel HDE families in any or all of the particulate ABT programs for HDEs, within the restrictions described in § 86.004–15 or superseding applicable sections. If the manufacturer elects to include engine families in any of these programs, the particulate FEL may not exceed 0.25 gram per brake horsepower-hour (0.093 gram per megajoule).

(2) The standards set forth in paragraph (a)(1) of this section refer to the exhaust emitted over the operating schedule set forth in paragraph (f)(2) of appendix I to this part, and measured and calculated in accordance with the procedures set forth in subpart N or P of this part, except as noted in § 86.098–23(c)(2) or superceding sections.

(b)(1) The opacity of smoke emission from new 2004 and later model year diesel HDEs shall not exceed:

(i) 20 percent during the engine acceleration mode.

(ii) 15 percent during the engine lugging mode.

(iii) 50 percent during the peaks in either mode.

(2) The standards set forth in paragraph (b)(1) of this section refer to exhaust smoke emissions generated under the conditions set forth in subpart I of this part and measured and calculated in accordance with those procedures.

(3) Evaporative emissions (total of non-oxygenated hydrocarbons plus methanol) from heavy-duty vehicles equipped with methanol-fueled diesel engines shall not exceed the following standards. The standards apply equally to certification and in-use vehicles. The spitback standard also applies to newly assembled vehicles.

(i) For vehicles with a Gross Vehicle Weight Rating of up to 14,000 lbs:

(A)(*1*) For the full three-diurnal test sequence described in § 86.1230–96, diurnal plus hot soak measurements: 3.0 grams per test.

(*2*) For the supplemental two-diurnal test sequence described in § 86.1230–96, diurnal plus hot soak measurements: 3.5 grams per test.

(B) Running loss test: 0.05 grams per mile.

(C) Fuel dispensing spitback test: 1.0 gram per test.

(ii) For vehicles with a Gross Vehicle Weight Rating of greater than 14,000 lbs:

(A)(*1*) For the full three-diurnal test sequence described in § 86.1230–96, diurnal plus hot soak measurements: 4.0 grams per test.

(*2*) For the supplemental two-diurnal test sequence described in § 86.1230–96, diurnal plus hot soak measurements: 4.5 grams per test.

(B) Running loss test: 0.05 grams per mile.

(iii)(A) For vehicles with a Gross Vehicle Weight Rating of up to 26,000 lbs, the standards set forth in paragraph (b)(3) of this section refer to a composite sample of evaporative emissions collected under the conditions and measured in accordance with the procedures set forth in subpart M of this part. For certification vehicles only, manufacturers may conduct testing to quantify a level of nonfuel background emissions for an individual test vehicle. Such a demonstration must include a description of the source(s) of emissions and an estimated decay rate. The demonstrated level of nonfuel background emissions may be subtracted from emission test results from certification vehicles if approved in advance by the Administrator.

(B) For vehicles with a Gross Vehicle Weight Rating of greater than 26,000 lbs., the standards set forth in paragraph (b)(3)(ii) of this section refer to the manufacturer's engineering design evaluation using good engineering practice (a statement of which is required in § 86.091–23(b)(4)(ii)).

(iv) All fuel vapor generated during in-use operations shall be routed exclusively to the evaporative control system (e.g., either canister or engine purge). The only exception to this requirement shall be for emergencies.

(4) Evaporative emissions from 2004 and later model year heavy-duty vehicles equipped with natural gas-fueled or liquefied petroleum gas-fueled HDEs shall not exceed the following standards. The standards apply equally to certification and in-use vehicles.

(i) For vehicles with a Gross Vehicle Weight Rating of up to 14,000 pounds for the full three-diurnal test sequence described in § 86.1230–96, diurnal plus

hot soak measurements: 3.0 grams per test.

(ii) For vehicles with a Gross Vehicle Weight Rating of greater than 14,000 pounds for the full three-diurnal test sequence described in § 86.1230–96, diurnal plus hot soak measurements: 4.0 grams per test.

(iii)(A) For vehicles with a Gross Vehicle Weight Rating of up to 26,000 pounds, the standards set forth in paragraph (b)(4) of this section refer to a composite sample of evaporative emissions collected under the conditions set forth in subpart M of this part and measured in accordance with those procedures.

(B) For vehicles with a Gross Vehicle Weight Rating greater than 26,000 pounds, the standards set forth in paragraphs (b)(3)(ii) and (b)(4)(ii) of this section refer to the manufacturer's engineering design evaluation using good engineering practice (a statement of which is required in § 86.091–23(b)(4)(ii)).

(c) No crankcase emissions shall be discharged into the ambient atmosphere from any new 2004 or later model year methanol-, natural gas-, or liquefied petroleum gas-fueled diesel, or any naturally-aspirated diesel HDE. For petroleum-fueled engines only, this provision does not apply to engines using turbochargers, pumps, blowers, or superchargers for air induction.

(d) Every manufacturer of new motor vehicle engines subject to the standards prescribed in this section shall, prior to taking any of the actions specified in section 203(a)(1) of the Act, test or cause to be tested motor vehicle engines in accordance with applicable procedures in subpart I or N of this part to ascertain that such test engines meet the requirements of paragraphs (a), (b), (c), and (d) of this section.

[62 FR 54721, Oct. 21, 1997]

§ 86.004–15 NO_X and particulate averaging, trading, and banking for heavy-duty engines.

(a)(1) Heavy-duty engines eligible for NO_X, NO_X plus NMHC, and particulate averaging, trading and banking programs are described in the applicable emission standards sections in this subpart. All heavy-duty engine families which include any engines labeled for use in clean-fuel vehicles as specified in 40 CFR part 88 are not eligible for these programs. Participation in these programs is voluntary.

(2)(i) Engine families with FELs exceeding the applicable standard shall obtain emission credits in a mass amount sufficient to address the shortfall. Credits may be obtained from averaging, trading, or banking, within the averaging set restrictions described in this section.

(ii) Engine families with FELs below the applicable standard will have emission credits available to average, trade, bank or a combination thereof. Credits may not be used for averaging or trading to offset emissions that exceed an FEL. Credits may not be used to remedy an in-use nonconformity determined by a Selective Enforcement Audit or by recall testing. However, credits may be used to allow subsequent production of engines for the family in question if the manufacturer elects to recertify to a higher FEL.

(iii) Credits scheduled to expire in the earliest model year shall be used, prior to using other available credits, to offset emissions of engine families with FELs exceeding the applicable standard.

(b) Participation in the NO_X, NO_X plus NMHC, and/or particulate averaging, trading, and banking programs shall be done as follows.

(1) During certification, the manufacturer shall:

(i) Declare its intent to include specific engine families in the averaging, trading and/or banking programs. Separate declarations are required for each program and for each pollutant (i.e., NO_X, NO_X plus NMHC, and particulate).

(ii) Declare an FEL for each engine family participating in one or more of these three programs.

(A) The FEL must be to the same level of significant digits as the emission standard (one-tenth of a gram per brake horsepower-hour for NO_X, NO_X plus NMHC, emissions and one-hundredth of a gram per brake horsepower-hour for particulate emissions).

(B) In no case may the FEL exceed the upper limit prescribed in the section concerning the applicable heavy-duty engine NO_X, NO_X plus NMHC, and particulate emission standards.

(iii) Calculate the projected emission credits (positive or negative) based on quarterly production projections for each participating family and for each pollutant, using the applicable equation in paragraph (c) of this section and the applicable factors for the specific engine family.

(iv)(A) Determine and state the source of the needed credits according to quarterly projected production for engine families requiring credits for certification.

(B) State where the quarterly projected credits will be applied for engine families generating credits.

(C) Credits may be obtained from or applied to only engine families within the same averaging set as described in paragraph (d) or (e) of this section. Credits available for averaging, trading, or banking as defined in § 86.090–2, may be applied exclusively to a given engine family, or reserved as defined in § 86.091–2.

(2) Based on this information each manufacturer's certification application must demonstrate:

(i) That at the end of model year production, each engine family has a net emissions credit balance of zero or more using the methodology in paragraph (c) of this section with any credits obtained from averaging, trading or banking.

(ii) The source of the credits to be used to comply with the emission standard if the FEL exceeds the standard, or where credits will be applied if the FEL is less than the emission standard. In cases where credits are being obtained, each engine family involved must state specifically the source (manufacturer/engine family) of the credits being used. In cases where credits are being generated/supplied, each engine family involved must state specifically the designated use (manufacturer/engine family or reserved) of the credits involved. All such reports shall include all credits involved in averaging, trading or banking.

(3) During the model year manufacturers must:

(i) Monitor projected versus actual production to be certain that compliance with the emission standards is achieved at the end of the model year.

(ii) Provide the end-of-model year reports required under § 86.001–23.

(iii) For manufacturers participating in emission credit trading, maintain the quarterly records required under § 86.091–7(c)(8).

(4) Projected credits based on information supplied in the certification application may be used to obtain a certificate of conformity. However, any such credits may be revoked based on review of end-of-model year reports, follow-up audits, and any other compliance measures deemed appropriate by the Administrator.

(5) Compliance under averaging, banking, and trading will be determined at the end of the model year. Engine families without an adequate amount of NO_X, NO_X plus NMHC, and/or particulate emission credits will violate the conditions of the certificate of conformity. The certificates of conformity may be voided ab initio for engine families exceeding the emission standard.

(6) If EPA or the manufacturer determines that a reporting error occurred on an end-of-year report previously submitted to EPA under this section, the manufacturer's credits and credit calculations will be recalculated. Erroneous positive credits will be void. Erroneous negative balances may be adjusted by EPA for retroactive use.

(i) If EPA review of a manufacturer's end-of-year report indicates a credit shortfall, the manufacturer will be permitted to purchase the necessary credits to bring the credit balance for that engine family to zero, using the discount specified in paragraph (c)(1) of this section on the ratio of credits purchased for every credit needed to bring the balance to zero. If sufficient credits are not available to bring the credit balance for the family in question to zero, EPA may void the certificate for that engine family ab initio.

(ii) If within 180 days of receipt of the manufacturer's end-of-year report, EPA review determines a reporting error in the manufacturer's favor (i.e., resulting in a positive credit balance) or if the manufacturer discovers such an error within 180 days of EPA receipt of the end-of-year report, the credits will be restored for use by the manufacturer.

(c)(1) For each participating engine family, NO_X, NO_X plus NMHC, and particulate emission credits (positive or negative) are to be calculated according to one of the following equations and rounded, in accordance with ASTM E29–93a, to the nearest one-tenth of a Megagram (Mg). Consistent units are to be used throughout the equation.

(i) For determining credit need for all engine families and credit availability for engine families generating credits for averaging programs only:

$$\text{Emission credits} = (\text{Std} - \text{FEL}) \times (\text{CF}) \times (\text{UL}) \times (\text{Production}) \times (10^{-6})$$

(ii) For determining credit availability for engine families generating credits for trading or banking programs:

$$\text{Emission credits} = (\text{Std} - \text{FEL}) \times (\text{CF}) \times (\text{UL}) \times (\text{Production}) \times (10^{-6}) \times (\text{Discount})$$

(iii) For purposes of the equations in paragraphs (c)(1) (i) and (ii) of this section:

Std = the current and applicable heavy-duty engine NO_X, NO_X plus NMHC, or particulate emission standard in grams per brake horsepower hour or grams per Megajoule.

FEL = the NO_X, NO_X plus NMHC, or particulate family emission limit for the engine family in grams per brake horsepower hour or grams per Megajoule.

CF = a transient cycle conversion factor in BHP-hr/mi or MJ/mi, as given in paragraph (c)(2) of this section.

UL = the useful life described in § 86.004–2, or alternative life as described in paragraph (f) of § 86.004–21, for the given engine family in miles.

Production = the number of engines produced for U.S. sales within the given engine family during the model year. Quarterly production projections are used for initial certification. Actual production is used for end-of-year compliance determination.

Discount = a one-time discount applied to all credits to be banked or traded within the model year generated. Except as otherwise allowed in paragraph (k) of this section, the discount applied here is 0.9 for diesel-cycle engines. The discount applied here is 0.8 for all Otto-cycle engines. Banked credits traded in a subsequent model year will not be subject to an additional discount. Banked credits used in a subsequent model year's averaging program will not have the discount restored.

(2)(i) The transient cycle conversion factor is the total (integrated) cycle brake horsepower-hour or Megajoules, divided by the equivalent mileage of the applicable transient cycle. For Otto-cycle heavy-duty engines, the equivalent mileage is 6.3 miles. For diesel heavy-duty engines, the equivalent mileage is 6.5 miles.

(ii) When more than one configuration is chosen by EPA to be tested in the certification of an engine family (as described in § 86.085–24), the conversion factor used is to be based upon a production weighted average value of the configurations in an engine family to calculate the conversion factor.

(d) *Averaging sets for NO_X and for NO_X plus NMHC emission credits.* The averaging and trading of NO_X emission credits for Otto-cycle engines and NO_X plus NMHC emission credits for diesel-cycle engines will only be allowed between heavy-duty engine families in the same averaging set. The averaging sets for the averaging and trading of NO_X and NO_X plus NMHC emission credits for heavy-duty engines are defined as follows:

(1) For NO_X credits from Otto-cycle heavy-duty engines:

(i) Otto-cycle heavy-duty engines constitute an averaging set. Averaging and trading among all Otto-cycle heavy-duty engine families is allowed. There are no subclass restrictions.

(ii) Gasoline-fueled heavy-duty vehicles certified under the provisions of § 86.085–1(b) may not average or trade with gasoline-fueled heavy-duty Otto-cycle engines, but may average or trade credits with light-duty trucks.

(iii) The averaging and trading of NO_X emission credits will only be allowed between heavy-duty engine families in the same regional category. Otto-cycle engines produced for sale in California constitute a separate regional category than engines produced for sale in the other 49 states. Banking

and trading are not applicable to engines sold in California.

(2) For NO_X plus NMHC credits from diesel-cycle heavy-duty engines:

(i) Each of the three primary intended service classes for heavy-duty diesel engines, as defined in § 86.004–2, constitute an averaging set. Averaging and trading among all diesel-cycle engine families within the same primary service class is allowed.

(ii) Urban buses are treated as members of the primary intended service class where they otherwise would fall.

(e) *Averaging sets for particulate emission credits.* The averaging and trading of particulate emission credits will only be allowed between diesel cycle heavy-duty engine families in the same averaging set. The averaging sets for the averaging and trading of particulate emission credits for diesel cycle heavy-duty engines are defined as follows:

(1) Engines intended for use in urban buses constitute a separate averaging set from all other heavy-duty engines. Averaging and trading between diesel cycle bus engine families is allowed.

(2) For heavy-duty engines, exclusive of urban bus engines, each of the three primary intended service classes for heavy-duty diesel cycle engines, as defined in § 86.004–2, constitute an averaging set. Averaging and trading between diesel-cycle engine families within the same primary service class is allowed.

(3) Otto cycle engines may not participate in particulate averaging, trading, or banking.

(f) *Banking of NO_X, NO_X plus NMHC, and particulate emission credits.* (1) *Credit deposits.* (i) NO_X, NO_X plus NMHC, and particulate emission credits may be banked from engine families produced in any model year.

(ii) Manufacturers may bank credits only after the end of the model year and after actual credits have been reported to EPA in the end-of-year report. During the model year and before submittal of the end-of-year report, credits originally designated in the certification process for banking will be considered reserved and may be redesignated for trading or averaging.

(2) *Credit withdrawals.* (i) After being generated, banked NO_X credits shall be available for use within three model years following the model year in which they were generated. NO_X credits from Otto-cycle HDE families not used within the period specified above shall be forfeited. NO_X plus NMHC and particulate credits from diesel-cycle HDE families do not expire.

(ii) Manufacturers withdrawing banked NO_X, NO_X plus NMHC, and/or particulate credits shall indicate so during certification and in their credit reports, as described in § 86.091–23.

(3) *Use of banked emission credits.* The use of banked credits shall be within the averaging set and other restrictions described in paragraphs (d) and (e) of this section, and only for the following purposes:

(i) Banked credits may be used in averaging, or in trading, or in any combination thereof, during the certification period. Credits declared for banking from the previous model year but not reported to EPA may also be used. However, if EPA finds that the reported credits can not be proven, they will be revoked and unavailable for use.

(ii) Banked credits may not be used for NO_X, NO_X plus NMHC, or particulate averaging and trading to offset emissions that exceed an FEL. Banked credits may not be used to remedy an in-use nonconformity determined by a Selective Enforcement Audit or by recall testing. However, banked credits may be used for subsequent production of the engine family if the manufacturer elects to recertify to a higher FEL.

(iii) Banked NO_X credits from 2003 and prior may be used in place of NO_X plus NMHC credits after 2003 provided that they are used in the correct averaging set and the NO_X credits have not expired.

(g)(1) For the purposes of paragraph (g) of this section, the following paragraphs assume NO_X, NO_X plus NMHC, and particulate nonconformance penalties (NCPs) will be available for the 2004 and later model year HDEs.

(2) Engine families using NO_X, NO_X plus NMHC, and/or particulate NCPs but not involved in averaging:

(i) May not generate NO_X, NO_X plus NMHC, or particulate credits for banking and trading.

(ii) May not use NO_X, NO_X plus NMHC, or particulate credits from banking and trading.

(3) If a manufacturer has any engine family to which application of NCPs and banking and trading credits is desired, that family must be separated into two distinct families. One family, whose FEL equals the standard, must use NCPs only while the other, whose FEL does not equal the standard, must use credits only.

(4) If a manufacturer has any engine family in a given averaging set which is using NO_X, NO_X plus NMHC, and/or particulate NCPs, none of that manufacturer's engine families in that averaging set may generate credits for banking and trading.

(h) In the event of a negative credit balance in a trading situation, both the buyer and the seller would be liable.

(i) Certification fuel used for credit generation must be of a type that is both available in use and expected to be used by the engine purchaser. Therefore, upon request by the Administrator, the engine manufacturer must provide information acceptable to the Administrator that the designated fuel is readily available commercially and would be used in customer service.

(j) *Credit apportionment*. At the manufacturers option, credits generated from diesel-cycle heavy-duty engines under the provisions described in this section may be sold to or otherwise provided to the another party for use in programs other than the averaging, trading and banking program described in this section.

(1) The manufacturer shall pre-identify two emission levels per engine family for the purposes of credit apportionment. One emission level shall be the FEL and the other shall be the level of the standard that the engine family is required to certify to under § 86.004–11. For each engine family, the manufacturer may report engine sales in two categories, ''ABT-only credits'' and ''nonmanufacturer-owned credits''.

(i) For engine sales reported as ''ABT-only credits'', the credits generated must be used solely in the ABT program described in this section.

(ii) The engine manufacturer may declare a portion of engine sales ''nonmanufacturer-owned credits'' and this portion of the credits generated between the standard and the FEL, based on the calculation in (c)(1) of this section, would belong to the engine purchaser. For ABT, the manufacturer may not generate any credits for the engine sales reported as ''nonmanufacturer-owned credits''. Engines reported as ''nonmanufacturer-owned credits'' shall comply with the FEL and the requirements of the ABT program in all other respects.

(2) Only manufacturer-owned credits reported as ''ABT-only credits'' shall be used in the averaging, trading, and banking provisions described in this section.

(3) Credits shall not be double-counted. Credits used in the ABT program may not be provided to an engine purchaser for use in another program.

(4) Manufacturers shall determine and state the number of engines sold as ''ABT-only credits'' and ''nonmanufacturer-owned credits'' in the end-of-model year reports required under § 86.001–23.

(k) *Additional Flexibility*. If a diesel-cycle engine family meets the conditions of either paragraph (k)(1) or (2) of this section, a Discount of 1.0 may be used in the trading and banking calculation, for both NO_X plus NMHC and for particulate, described in paragraph (c)(1) of this section.

(1) The engine family certifies with a certification level of 1.9 g/bhp-hr NO_X plus NMHC or lower for all diesel-cycle engine families.

(2) All of the following must apply to the engine family:

(i) Diesel-cycle engines only;

(ii) 2004, 2005, and 2006 model years only;

(iii) Must be an engine family using carry-over certification data from prior to model year 2004 where the NO_X plus the HC certification level prior to model year 2004 is below the NO_X plus NMHC or NO_X plus NMHCE standard set forth in § 86.004–11. Under this option, the NO_X credits generated from this engine family prior to model year 2004 may be used as NO_X plus NMHC credits.

[62 FR 54722, Oct. 21, 1997]

§86.004–21 Application for certification.

Section 86.004–21 includes text that specifies requirements that differ from §86.094–21 or §86.096–21. Where a paragraph in §86.094–21 or §86.096–21 is identical and applicable to §86.004–21, this may be indicated by specifying the corresponding paragraph and the statement ''[Reserved]. For guidance see §86.094–21.'' or ''[Reserved]. For guidance see §86.096–21.''.

(a) through (b)(3) [Reserved]. For guidance see §86.094–21.

(b)(4)(i) For light-duty vehicles and light-duty trucks, a description of the test procedures to be used to establish the evaporative emission and/or refueling emission deterioration factors, as appropriate, required to be determined and supplied in §86.001–23(b)(2).

(b)(4)(ii) through (b)(5)(iv) [Reserved]. For guidance see §86.094–21.

(b)(5)(v) For light-duty vehicles and applicable light-duty trucks with non-integrated refueling emission control systems, the number of continuous UDDS cycles, determined from the fuel economy on the UDDS applicable to the test vehicle of that evaporative/ refueling emission family-emission control system combination, required to use a volume of fuel equal to 85% of fuel tank volume.

(6) *Participation in averaging programs*—(i) *Particulate averaging.* (A) If the manufacturer elects to participate in the particulate averaging program for diesel light-duty vehicles and/or diesel light-duty trucks or the particulate averaging program for heavy-duty diesel engines, the application must list the family particulate emission limit and the projected U.S. production volume of the family for the model year.

(B) The manufacturer shall choose the level of the family particulate emission limits, accurate to hundredth of a gram per mile or hundredth of a gram per brake horsepowerhour for HDEs.

(C) The manufacturer may at any time during production elect to change the level of any family particulate emission limit(s) by submitting the new limit(s) to the Administrator and by demonstrating compliance with the limit(s) as described in §§86.090–2 and 86.094–28(b)(5)(i).

(ii) *NO_X and NO_X plus NMHC averaging.* (A) If the manufacturer elects to participate in the NO_X averaging program for light-duty trucks or otto-cycle HDEs or the NO_X plus NMHC averaging program for diesel-cycle HDEs, the application must list the family emission limit and the projected U.S. production volume of the family for the model year.

(B) The manufacturer shall choose the level of the family emission limits, accurate to one-tenth of a gram per mile or to one-tenth of a gram per brake horsepower-hour for HDEs.

(C) The manufacturer may at any time during production elect to change the level of any family emission limit(s) by submitting the new limits to the Administrator and by demonstrating compliance with the limit(s) as described in §§86.088–2 and 86.094–28(b)(5)(ii).

(b)(7) and (b)(8) [Reserved]. For guidance see §86.094–21.

(b)(9) For each light-duty vehicle, light-duty truck, evaporative/refueling emission family or heavy-duty vehicle evaporative emission family, a description of any unique procedures required to perform evaporative and/or refueling emission tests, as applicable, (including canister working capacity, canister bed volume, and fuel temperature profile for the running loss test) for all vehicles in that evaporative and/or evaporative/refueling emission family, and a description of the method used to develop those unique procedures.

(10) For each light-duty vehicle or applicable light-duty truck evaporative/ refueling emission family, or each heavy-duty vehicle evaporative emission family:

(i) Canister working capacity, according to the procedures specified in §86.132–96(h)(1)(iv);

(ii) Canister bed volume; and

(iii) Fuel temperature profile for the running loss test, according to the procedures specified in §86.129–94(d).

(c) through (j) [Reserved]. For guidance see §86.094–21.

(k) and (l) [Reserved]. For guidance see §86.096–21.

[62 FR 54724, Oct. 21, 1997]

§ 86.004–25 Maintenance.

Section 86.004–25 includes text that specifies requirements that differ from § 86.094–25 or § 86.098–25. Where a paragraph in § 86.094–25 or § 86.098–25 is identical and applicable to § 86.004–25, this may be indicated by specifying the corresponding paragraph and the statement ''[Reserved]. For guidance see § 86.094–25.'' or ''[Reserved]. For guidance see § 86.098–25.''.

(a)(1) Applicability. This section applies to light-duty vehicles, light-duty trucks, and HDEs.

(2) Maintenance performed on vehicles, engines, subsystems, or components used to determine exhaust, evaporative or refueling emission deterioration factors, as appropriate, is classified as either emission-related or non-emission-related and each of these can be classified as either scheduled or unscheduled. Further, some emission-related maintenance is also classified as critical emission-related maintenance.

(b) Introductory text through (b)(3)(ii) [Reserved]. For guidance see § 86.094–25.

(b)(3)(iii) For otto-cycle heavy-duty engines, the adjustment, cleaning, repair, or replacement of the items listed in paragraphs (b)(3)(iii) (A) through (E) of this section shall occur at 50,000 miles (or 1,500 hours) of use and at 50,000-mile (or 1,500-hour) intervals thereafter.

(A) Positive crankcase ventilation valve.

(B) Emission-related hoses and tubes.

(C) Ignition wires.

(D) Idle mixture.

(E) Exhaust gas recirculation system related filters and coolers.

(iv) For otto-cycle light-duty vehicles, light-duty trucks and otto-cycle heavy-duty engines, the adjustment, cleaning, repair, or replacement of the oxygen sensor shall occur at 80,000 miles (or 2,400 hours) of use and at 80,000-mile (or 2,400-hour) intervals thereafter.

(v) For otto-cycle heavy-duty engines, the adjustment, cleaning, repair, or replacement of the items listed in paragraphs (b)(3)(v) (A) through (H) of this section shall occur at 100,000 miles (or 3,000 hours) of use and at 100,000-mile (or 3,000-hour) intervals thereafter.

(A) Catalytic converter.

(B) Air injection system components.

(C) Fuel injectors.

(D) Electronic engine control unit and its associated sensors (except oxygen sensor) and actuators.

(E) Evaporative emission canister.

(F) Turbochargers.

(G) Carburetors.

(H) Exhaust gas recirculation system (including all related control valves and tubing) except as otherwise provided in paragraph (b)(3)(iii)(E) of this section.

(b)(3)(vi)(A) through (b)(3)(vi)(D) [Reserved]. For guidance see § 86.094–25.

(b)(3)(vi)(E) through (b)(3)(vi)(J) [Reserved]. For guidance see § 86.098–25.

(4) For diesel-cycle light-duty vehicles, light-duty trucks, and HDEs, emission-related maintenance in addition to or at shorter intervals than that listed in paragraphs (b)(4) (i) through (iv) of this section will not be accepted as technologically necessary, except as provided in paragraph (b)(7) of this section.

(i) For diesel-cycle heavy-duty engines, the adjustment, cleaning, repair, or replacement of the items listed in paragraphs (b)(4)(i) (A) through (C) of this section shall occur at 50,000 miles (or 1,500 hours) of use and at 50,000-mile (or 1,500-hour) intervals thereafter.

(A) Exhaust gas recirculation system related filters and coolers.

(B) Positive crankcase ventilation valve.

(C) Fuel injector tips (cleaning only).

(ii) For diesel-cycle light-duty vehicles and light-duty trucks, the adjustment, cleaning, repair, or replacement of the positive crankcase ventilation valve shall occur at 50,000 miles of use and at 50,000-mile intervals thereafter.

(iii) The adjustment, cleaning, repair, or replacement of items listed in paragraphs (b)(4)(iii) (A) through (G) of this section shall occur at 100,000 miles (or 3,000 hours) of use and at 100,000-mile (or 3,000-hour) intervals thereafter for light heavy-duty diesel engines, or, at 150,000 miles (or 4,500 hours) intervals thereafter for medium and heavy heavy-duty diesel engines.

(A) Fuel injectors.

(B) Turbocharger.

(C) Electronic engine control unit and its associated sensors and actuators.

(D) Particulate trap or trap-oxidizer system (including related components).

(E) Exhaust gas recirculation system (including all related control valves and tubing) except as otherwise provided in paragraph (b)(4)(i)(A) of this section.

(F) Catalytic converter.

(G) Any other add-on emissions-related component (i.e., a component whose sole or primary purpose is to reduce emissions or whose failure will significantly degrade emissions control and whose function is not integral to the design and performance of the engine.)

(iv) For disel-cycle light-duty vehicles and light-duty trucks, the adjustment, cleaning, repair, or replacement shall occur at 100,000 miles of use and at 100,000-mile intervals thereafter of the items listed in paragraphs (b)(4)(iv) (A) through (G) of this section.

(A) Fuel injectors.

(B) Turbocharger.

(C) Electronic engine control unit and its associated sensors and actuators.

(D) Particulate trap or trap-oxidizer system (including related components).

(E) Exhaust gas recirculation system including all related filters and control valves.

(F) Catalytic converter.

(G) Superchargers.

(5) [Reserved]

(6)(i) The components listed in paragraphs (b)(6)(i) (A) through (H) of this section are currently defined as critical emission-related components.

(A) Catalytic converter.

(B) Air injection system components.

(C) Electronic engine control unit and its associated sensors (including oxygen sensor if installed) and actuators.

(D) Exhaust gas recirculation system (including all related filters, coolers, control valves, and tubing).

(E) Positive crankcase ventilation valve.

(F) Evaporative and refueling emission control system components (excluding canister air filter).

(G) Particulate trap or trap-oxidizer system.

(H) Any other add-on emissions-related component (i.e., a component whose sole or primary purpose is to reduce emissions or whose failure will significantly degrade emissions control and whose function is not integral to the design and performance of the engine.)

(ii) All critical emission-related scheduled maintenance must have a reasonable likelihood of being performed in-use. The manufacturer shall be required to show the reasonable likelihood of such maintenance being performed in-use, and such showing shall be made prior to the performance of the maintenance on the durability data vehicle. Critical emission-related scheduled maintenance items which satisfy one of the conditions defined in paragraphs (b)(6)(ii) (A) through (F) of this section will be accepted as having a reasonable likelihood of the maintenance item being performed in-use.

(A) Data are presented which establish for the Administrator a connection between emissions and vehicle performance such that as emissions increase due to lack of maintenance, vehicle performance will simultaneously deteriorate to a point unacceptable for typical driving.

(B) Survey data are submitted which adequately demonstrate to the Administrator that, at an 80 percent confidence level, 80 percent of such engines already have this critical maintenance item performed in-use at the recommended interval(s).

(C) A clearly displayed visible signal system approved by the Administrator is installed to alert the vehicle driver that maintenance is due. A signal bearing the message ''maintenance needed'' or ''check engine'', or a similar message approved by the Administrator, shall be actuated at the appropriate mileage point or by component failure. This signal must be continuous while the engine is in operation and not be easily eliminated without performance of the required maintenance. Resetting the signal shall be a required step in the maintenance operation. The method for resetting the signal system shall be approved by the Administrator. For HDEs, the system must not be designed to deactivate upon the end of the useful life of the engine or thereafter.

(D) A manufacturer may desire to demonstrate through a survey that a critical maintenance item is likely to be performed without a visible signal on a maintenance item for which there is no prior in-use experience without the signal. To that end, the manufacturer may in a given model year market up to 200 randomly selected vehicles per critical emission-related maintenance item without such visible signals, and monitor the performance of the critical maintenance item by the owners to show compliance with paragraph (b)(6)(ii)(B) of this section. This option is restricted to two consecutive model years and may not be repeated until any previous survey has been completed. If the critical maintenance involves more than one engine family, the sample will be sales weighted to ensure that it is representative of all the families in question.

(E) The manufacturer provides the maintenance free of charge, and clearly informs the customer that the maintenance is free in the instructions provided under § 86.087–38.

(F) Any other method which the Administrator approves as establishing a reasonable likelihood that the critical maintenance will be performed in-use.

(iii) Visible signal systems used under paragraph (b)(6)(ii)(C) of this section are considered an element of design of the emission control system. Therefore, disabling, resetting, or otherwise rendering such signals inoperative without also performing the indicated maintenance procedure is a prohibited act under section 203(a)(3) of the Clean Air Act (42 U.S.C. 7522(a)(3)).

(b)(7) through (h) [Reserved]. For guidance see § 86.094–25.

[62 FR 54725, Oct. 21, 1997]

§ 86.004–28 Compliance with emission standards.

Section 86.004–28 includes text that specifies requirements that differ from § 86.094–28, § 86.098–28, § 86.000–28 or § 86.001–28. Where a paragraph in § 86.094–28, § 86.098–28, § 86.000–28 or § 86.001–28 is identical and applicable to § 86.004–28, this may be indicated by specifying the corresponding paragraph and the statement ''[Reserved]. For guidance see § 86.094–28.'' or ''[Reserved]. For guidance see § 86.098–28.'' or ''[Reserved]. For guidance see § 86.000–28.'' or ''[Reserved]. For guidance see § 86.001–28.''

(a)(1) through (a)(2) [Reserved. For guidance see § 86.000–28.

(a)(3) [Reserved]. For guidance see § 86.094–28.

(a)(4) introductory text [Reserved]. For guidance see § 86.098–28.

(a)(4)(i) [Reserved]. For guidance see § 86.000–28.

(a)(4)(i)(A) through (a)(4)(i)(B)(*2*)(*i*) [Reserved. For guidance see § 86.094–28.

(a)(4)(i)(B)(*2*)(*ii*) [Reserved]. For guidance see § 86.000–28.

(a)(4)(i)(B)(*2*)(*iii*) through (a)(4)(i)(B)(*2*)(*iv*) [Reserved]. For guidance see § 86.094–28.

(a)(4)(i)(C) through (a)(4)(i)(D)(*2*) [Reserved]. For guidance see § 86.098–28.

(a)(4)(ii)(A)(*1*) through (a)(4)(ii)(A)(*2*) [Reserved]. For guidance see § 86.000–28.

(a)(4)(ii)(B) through (a)(4)(ii)(C) [Reserved]. For guidance see § 86.098–28.

(a)(4)(iii) [Reserved]. For guidance see § 86.000–28.

(a)(4)(iv) [Reserved]. For guidance see § 86.094–28.

(a)(4)(v) [Reserved]. For guidance see § 86.098–28.

(a)(5) through (a)(6) [Reserved]. For guidance see § 86.094–28.

(a)(7) introductory text [Reserved]. For guidance see § 86.098–28.

(a)(7)(i) [Reserved]. For guidance see § 86.000–28.

(a)(7)(ii) [Reserved]. For guidance see § 86.094–28.

(b)(1) This paragraph (b) applies to light-duty trucks.

(2) Each exhaust, evaporative and refueling emission standard (and family emission limits, as appropriate) of § 86.004–9 applies to the emissions of vehicles for the appropriate useful life as defined in §§ 86.098–2 and 86.004–9.

(b)(3) through (b)(4)(i) [Reserved]. For guidance see § 86.094–28.

(b)(4)(ii) through (b)(6) [Reserved]. For guidance see § 86.000–28.

(b)(7)(i) through (b)(9) [Reserved]. For guidance see § 86.001–28.

(c)(1) Paragraph (c) of this section applies to heavy-duty engines.

(2) The applicable exhaust emission standards (or family emission limits, as appropriate) for Otto-cycle engines and for diesel-cycle engines apply to

the emissions of engines for their useful life.

(3) Since emission control efficiency generally decreases with the accumulation of service on the engine, deterioration factors will be used in combination with emission data engine test results as the basis for determining compliance with the standards.

(4)(i) Paragraph (c)(4) of this section describes the procedure for determining compliance of an engine with emission standards (or family emission limits, as appropriate), based on deterioration factors supplied by the manufacturer. Deterioration factors shall be established using applicable emissions test procedures. NO_X plus NMHC deterioration factors shall be established based on the sum of the pollutants. When establishing deterioration factors for NO_X plus NMHC, a negative deterioration (emissions decrease from the official exhaust emissions test result) for one pollutant may not offset deterioration of the other pollutant. Where negative deterioration occurs for NO_X and/or NMHC, the official exhaust emission test result shall be used for purposes of determining the NO_X plus NMHC deterioration factor.

(ii) Separate exhaust emission deterioration factors, determined from tests of engines, subsystems, or components conducted by the manufacturer, shall be supplied for each engine-system combination. For Otto-cycle engines, separate factors shall be established for transient NMHC (NMHCE), CO, NO_X, NO_X plus NMHC, and idle CO, for those engines utilizing aftertreatment technology (e.g., catalytic converters). For diesel-cycle engines, separate factors shall be established for transient NMHC (NMHCE), CO, NO_X, NO_X plus NMHC and exhaust particulate. For diesel-cycle smoke testing, separate factors shall also be established for the acceleration mode (designated as ''A''), the lugging mode (designated as ''B''), and peak opacity (designated as ''C'').

(iii)(A) Paragraphs (c)(4)(iii)(A) (*1*) and (*2*) of this section apply to Otto-cycle HDEs.

(*1*) Otto-cycle HDEs not utilizing aftertreatment technology (e.g., catalytic converters). For transient NMHC (NMHCE), CO, NO_X, the official exhaust emission results for each emission data engine at the selected test point shall be adjusted by the addition of the appropriate deterioration factor. However, if the deterioration factor supplied by the manufacturer is less than zero, it shall be zero for the purposes of this paragraph.

(*2*) Otto-cycle HDEs utilizing aftertreatment technology (e.g., catalytic converters). For transient NMHC (NMHCE), CO, NO_X, and for idle CO, the official exhaust emission results for each emission data engine at the selected test point shall be adjusted by multiplication by the appropriate deterioration factor. However, if the deterioration factor supplied by the manufacturer is less than one, it shall be one for the purposes of this paragraph.

(B) Paragraph (c)(4)(iii)(B) of this section applies to diesel-cycle HDEs.

(*1*) Diesel-cycle HDEs not utilizing aftertreatment technology (e.g., particulate traps). For transient NMHC (NMHCE), CO, NO_X, NO_X plus NMHC, and exhaust particulate, the official exhaust emission results for each emission data engine at the selected test point shall be adjusted by the addition of the appropriate deterioration factor. However, if the deterioration factor supplied by the manufacturer is less than zero, it shall be zero for the purposes of this paragraph.

(*2*) Diesel-cycle HDEs utilizing aftertreatment technology (e.g., particulate traps). For transient NMHC (NMHCE), CO, NO_X, NO_X plus NMHC, and exhaust particulate, the official exhaust emission results for each emission data engine at the selected test point shall be adjusted by multiplication by the appropriate deterioration factor. However, if the deterioration factor supplied by the manufacturer is less than one, it shall be one for the purposes of this paragraph.

(*3*) Diesel-cycle HDEs only. For acceleration smoke (''A''), lugging smoke (''B''), and peak smoke (''C''), the official exhaust emission results for each emission data engine at the selected test point shall be adjusted by the addition of the appropriate deterioration factor. However, if the deterioration factor supplied by the manufacturer is less than zero, it shall be zero for the purposes of this paragraph.

(iv) The emission values to compare with the standards (or family emission limits, as appropriate) shall be the adjusted emission values of paragraph (c)(4)(iii) of this section, rounded to the same number of significant figures as contained in the applicable standard in accordance with ASTM E 29–93a (as referenced in § 86.094–28 (a)(4)(i)(B)(2)(ii)), for each emission data engine.

(*5*) and (*6*) [Reserved]

(*7*) Every test engine of an engine family must comply with all applicable standards (or family emission limits, as appropriate), as determined in paragraph (c)(4)(iv) of this section, before any engine in that family will be certified.

(*8*) For the purposes of setting an NMHC plus NO_x certification level or FEL for a diesel-fueled engine family, the manufacturer may use one of the following options for the determination of NMHC for an engine family. The manufacturer must declare which option is used in its application for certification of that engine family.

(i) THC may be used in lieu of NMHC for the standards set forth in § 86.004–11.

(ii) The manufacturer may choose its own method to analyze methane with prior approval of the Administrator.

(iii) The manufacturer may assume that two percent of the measured THC is methane (NMHC $=0.98 \times$ THC).

(d)(1) Paragraph (d) of this section applies to heavy-duty vehicles equipped with gasoline-fueled or methanol-fueled engines.

(2) The applicable evaporative emission standards in this subpart apply to the emissions of vehicles for their useful life.

(3)(i) For vehicles with a GVWR of up to 26,000 pounds, because it is expected that emission control efficiency will change during the useful life of the vehicle, an evaporative emission deterioration factor shall be determined from the testing described in § 86.098–23(b)(3) for each evaporative emission family-evaporative emission control system combination to indicate the evaporative emission control system deterioration during the useful life of the vehicle (minimum 50,000 miles). The factor shall be established to a minimum of two places to the right of the decimal.

(ii) For vehicles with a GVWR of greater than 26,000 pounds, because it is expected that emission control efficiency will change during the useful life of the vehicle, each manufacturer's statement as required in § 86.098–23(b)(4)(ii) shall include, in accordance with good engineering practice, consideration of control system deterioration.

(4) The evaporative emission test results, if any, shall be adjusted by the addition of the appropriate deterioration factor, provided that if the deterioration factor as computed in paragraph (d)(3) of this section is less than zero, that deterioration factor shall be zero for the purposes of this paragraph.

(5) The emission level to compare with the standard shall be the adjusted emission level of paragraph (d)(4) of this section. Before any emission value is compared with the standard, it shall be rounded, in accordance with ASTM E 29–93a (as referenced in § 86.094–28 (a)(4)(i)(B)(2)(ii)), to two significant figures. The rounded emission values may not exceed the standard.

(6) Every test vehicle of an evaporative emission family must comply with the evaporative emission standard, as determined in paragraph (d)(5) of this section, before any vehicle in that family may be certified.

(e) [Reserved]

(f) through (g)(3) through [Reserved]. For guidance see § 86.001–28.

(g)(4) Vehicles certified to the refueling emission standard under this provision shall not be counted in the sales percentage compliance determinations for the 2004, 2005 and subsequent model years.

(h) [Reserved]. For guidance see § 86.001–28.

[61 FR 54890, Oct. 22, 1996, as amended at 62 FR 54726, Oct. 21, 1997]

EFFECTIVE DATE NOTE: At 61 FR 54890, Oct. 22, 1996, § 86.004–28 was revised. This section contains information collection and recordkeeping requirements and will not become effective until approval has been given by the Office of Management and Budget.

§ 86.004–30 Certification.

Section 86.004–30 includes text that specifies requirements that differ from §§ 86.094–30, 86.095–30, 86.096–30, 86.098–30 or 86.001–30. Where a paragraph in

§ 86.094–30, § 86.095–30, § 86.096–30, § 86.098–30 or § 86.001–30 is identical and applicable to § 86.004–30, this may be indicated by specifying the corresponding paragraph and the statement ''[Reserved]. For guidance see § 86.094–30.'' or ''[Reserved]. For guidance see § 86.095–30.'' or ''[Reserved]. For guidance see § 86.096–30.'' or ''[Reserved]. For guidance see § 86.098–30.'' or ''[Reserved]. For guidance see § 86.001–30.''.

(a)(1) and (a)(2) [Reserved]. For guidance see § 86.094–30.

(a)(3)(i) One such certificate will be issued for each engine family. For gasoline-fueled and methanol-fueled light-duty vehicles and light-duty trucks, and petroleum-fueled diesel cycle light-duty vehicles and light-duty trucks not certified under § 86.098–28(g), one such certificate will be issued for each engine family-evaporative/refueling emission family combination. Each certificate will certify compliance with no more than one set of in-use and certification standards (or family emission limits, as appropriate).

(ii) For gasoline-fueled and methanol fueled heavy-duty vehicles, one such certificate will be issued for each manufacturer and will certify compliance for those vehicles previously identified in that manufacturer's statement(s) of compliance as required in § 86.098–23(b)(4) (i) and (ii).

(iii) For diesel light-duty vehicles and light-duty trucks, or diesel HDEs, included in the applicable particulate averaging program, the manufacturer may at any time during production elect to change the level of any family particulate emission limit by demonstrating compliance with the new limit as described in § 86.094–28(a)(6), § 86.094–28(b)(5)(i), or § 86.004–28(c)(5)(i). New certificates issued under this paragraph will be applicable only for vehicles (or engines) produced subsequent to the date of issuance.

(iv) For light-duty trucks or HDEs included in the applicable NO_X averaging program, the manufacturer may at any time during production elect to change the level of any family NO_X emission limit by demonstrating compliance with the new limit as described in § 86.094–28(b)(5)(ii) or § 86.004–28(c)(5)(ii). New certificates issued under this paragraph will be applicable only for vehicles (or engines) produced subsequent to the day of issue.

(4)(i) For exempt light-duty vehicles and light-duty trucks under the provisions of § 86.094–8(j) or § 86.094–9(j), an adjustment or modification performed in accordance with instructions provided by the manufacturer for the altitude where the vehicle is principally used will not be considered a violation of section 203(a)(3) of the Clean Air Act (42 U.S.C. 7522(a)(3)).

(ii) A violation of section 203(a)(1) of the Clean Air Act (42 U.S.C. 7522(a)(1)) occurs when a manufacturer sells or delivers to an ultimate purchaser any light-duty vehicle or light-duty truck, subject to the regulations under the Act, under any of the conditions specified in paragraph (a)(4)(ii) of this section.

(A) When a light-duty vehicle or light-duty truck is exempted from meeting high-altitude requirements as provided in § 86.090–8(h) or § 86.094–9(h):

(*1*) At a designated high-altitude location, unless such manufacturer has reason to believe that such vehicle will not be sold to an ultimate purchaser for principal use at a designated high-altitude location; or

(*2*) At a location other than a designated high-altitude location, when such manufacturer has reason to believe that such motor vehicle will be sold to an ultimate purchaser for principal use at a designated high-altitude location.

(B) When a light-duty vehicle or light-duty truck is exempted from meeting low-altitude requirements as provided in § 86.094–8(i) or § 86.094–9(i):

(*1*) At a designated low-altitude location, unless such manufacturer has reason to believe that such vehicle will not be sold to an ultimate purchaser for principal use at a designated low-altitude location; or

(*2*) At a location other than a designated low-altitude location, when such manufacturer has reason to believe that such motor vehicle will be sold to an ultimate purchaser for principal use at a designated low-altitude location.

(a)(4)(iii) introductory text through (a)(4)(iii)(C) [Reserved]. For guidance see § 86.094–30.

(a)(4)(iv) introductory text [Reserved]. For guidance see § 86.095–30.

(a)(4)(iv)(A) through (a)(9) [Reserved]. For guidance see § 86.094–30.

(10)(i) For diesel-cycle light-duty vehicle and diesel-cycle light-duty truck families which are included in a particulate averaging program, the manufacturer's production-weighted average of the particulate emission limits of all engine families in a participating class or classes shall not exceed the applicable diesel-cycle particulate standard, or the composite particulate standard defined in § 86.090–2 as appropriate, at the end of the model year, as determined in accordance with this part. The certificate shall be void ab initio for those vehicles causing the production-weighted FEL to exceed the particulate standard.

(ii) For all heavy-duty diesel-cycle engines which are included in the particulate ABT programs under § 86.098–15 or superseding ABT sections as applicable, the provisions of paragraphs (a)(10)(ii) (A) through (C) of this section apply.

(A) All certificates issued are conditional upon the manufacturer complying with the provisions of § 86.098–15 or superseding ABT sections as applicable and the ABT related provisions of other applicable sections, both during and after the model year production.

(B) Failure to comply with all provisions of § 86.098–15 or superseding ABT sections as applicable will be considered to be a failure to satisfy the conditions upon which the certificate was issued, and the certificate may be deemed void ab initio.

(C) The manufacturer shall bear the burden of establishing to the satisfaction of the Administrator that the conditions upon which the certificate was issued were satisfied or excused.

(11)(i) For light-duty truck families which are included in a NO_X averaging program, the manufacturer's production-weighted average of the NO_X emission limits of all such engine families shall not exceed the applicable NO_X emission standard, or the composite NO_X emission standard defined in § 86.088–2, as appropriate, at the end of the model year, as determined in accordance with this part. The certificate shall be void ab initio for those vehicles causing the production-weighted FEL to exceed the NO_X standard.

(ii) For all HDEs which are included in the NO_X plus NMHC ABT programs contained in § 86.098–15, or superseding ABT sections as applicable, the provisions of paragraphs (a)(11)(ii) (A) through (C) of this section apply.

(A) All certificates issued are conditional upon the manufacturer complying with the provisions of § 86.098–15 or superseding ABT sections as applicable and the ABT related provisions of other applicable sections, both during and after the model year production.

(B) Failure to comply with all provisions of § 86.098–15 or superseding ABT sections as applicable will be considered to be a failure to satisfy the conditions upon which the certificate was issued, and the certificate may be deemed void ab initio.

(C) The manufacturer shall bear the burden of establishing to the satisfaction of the Administrator that the conditions upon which the certificate was issued were satisfied or excused.

(a)(12) [Reserved]. For guidance see § 86.094–30.

(a)(13) [Reserved]. For guidance see § 86.095–30.

(a)(14) [Reserved]. For guidance see § 86.094–30.

(a) (15) through (18) [Reserved]. For guidance see § 86.096–30.

(a)(19) [Reserved]. For guidance see § 86.098–30.

(a)(20) [Reserved]. For guidance see § 86.001–30.

(a)(21) For all light-duty trucks certified to refueling emission standards under § 86.004–9, the provisions of paragraphs (a)(21) (i) through (iii) of this section apply.

(i) All certificates issued are conditional upon the manufacturer complying with all provisions of § 86.004–9 both during and after model year production.

(ii) Failure to meet the required implementation schedule sales percentages as specified in § 86.004–9 will be considered to be a failure to satisfy the conditions upon which the certificate(s) was issued and the individual vehicles sold in violation of the implementation schedule shall not be covered by the certificate.

(iii) The manufacturer shall bear the burden of establishing to the satisfaction of the Administrator that the conditions upon which the certificate was issued were satisfied.

(b)(1) introductory text through (b)(1)(ii)(A) [Reserved]. For guidance see §86.094–30.

(b)(1)(ii)(B) The emission data vehicle(s) selected under §86.001–24(b)(vii)(A) and (B) shall represent all vehicles of the same evaporative/refueling control system within the evaporative/refueling family.

(b)(1)(ii)(C) [Reserved]. For guidance see §86.094–30.

(b)(1)(ii)(D) The emission-data vehicle(s) selected under §86.098–24(b)(1)(viii) shall represent all vehicles of the same evaporative/refueling control system within the evaporative/refueling emission family, as applicable.

(b)(1)(iii) and (b)(1)(iv) [Reserved]. For guidance see §86.094–30.

(b)(2) [Reserved]. For guidance see §86.098–30.

(b)(3) through (b)(4)(i) [Reserved]. For guidance see §86.094–30.

(b)(4)(ii) introductory text [Reserved]. For guidance see §86.098–30.

(b)(4)(ii)(A) [Reserved]. For guidance see §86.094–30.

(b)(4)(ii)(B) through (b)(4)(iv) [Reserved]. For guidance see §86.098–30.

(b)(5) through (e) [Reserved]. For guidance see §86.094–30.

(f) introductory text through (f)(3) [Reserved]. For guidance see §86.095–30.

(f)(4) [Reserved]. For guidance see §86.098–30.

[59 FR 16287, Apr. 6, 1994, as amended at 62 FR 54727, Oct. 21, 1997]

§86.004–38 Maintenance instructions.

Section 86.004–38 includes text that specifies requirements that differ from §86.094–38. Where a paragraph in §86.094–38 is identical and applicable to §86.004–38 this may be indicated by specifying the corresponding paragraph and the statement ''[Reserved]. For guidance see §86.094–38.''.

(a) The manufacturer shall furnish or cause to be furnished to the purchaser of each new motor vehicle (or motor vehicle engine) subject to the standards prescribed in §86.099–8, §86.004–9, §86.004–10, or §86.004–11, as applicable, written instructions for the proper maintenance and use of the vehicle (or engine), by the purchaser consistent with the provisions of §86.004–25, which establishes what scheduled maintenance the Administrator approves as being reasonable and necessary.

(1) The maintenance instructions required by this section shall be in clear, and to the extent practicable, nontechnical language.

(2) The maintenance instructions required by this section shall contain a general description of the documentation which the manufacturer will require from the ultimate purchaser or any subsequent purchaser as evidence of compliance with the instructions.

(b) Instructions provided to purchasers under paragraph (a) of this section shall specify the performance of all scheduled maintenance performed by the manufacturer on certification durability vehicles and, in cases where the manufacturer performs less maintenance on certification durability vehicles than the allowed limit, may specify the performance of any scheduled maintenance allowed under §86.004–25.

(c) Scheduled emission-related maintenance in addition to that performed under §86.004–25(b) may only be recommended to offset the effects of abnormal in-use operating conditions, except as provided in paragraph (d) of this section. The manufacturer shall be required to demonstrate, subject to the approval of the Administrator, that such maintenance is reasonable and technologically necessary to assure the proper functioning of the emission control system. Such additional recommended maintenance shall be clearly differentiated, in a form approved by the Administrator, from that approved under §86.004–25(b).

(d) Inspections of emission-related parts or systems with instructions to replace, repair, clean, or adjust the parts or systems if necessary, are not considered to be items of scheduled maintenance which insure the proper functioning of the emission control system. Such inspections, and any recommended maintenance beyond that approved by the Administrator as reasonable and necessary under paragraphs (a), (b), and (c) of this section,

may be included in the written instructions furnished to vehicle owners under paragraph (a) of this section: Provided, That such instructions clearly state, in a form approved by the Administrator, that the owner need not perform such inspections or recommended maintenance in order to maintain the emissions defect and emissions performance warranty or manufacturer recall liability.

(e) The manufacturer may choose to include in such instructions an explanation of any distinction between the useful life specified on the label, and the emissions defect and emissions performance warranty period. The explanation must clearly state that the useful life period specified on the label represents the average period of use up to retirement or rebuild for the engine family represented by the engine used in the vehicle. An explanation of how the actual useful lives of engines used in various applications are expected to differ from the average useful life may be included. The explanation(s) shall be in clear, non-technical language that is understandable to the ultimate purchaser.

(f) If approved by the Administrator, the instructions provided to purchasers under paragraph (a) of this section shall indicate what adjustments or modifications, if any, are necessary to allow the vehicle to meet applicable emission standards at elevations above 4,000 feet, or at elevations of 4,000 feet or less.

(g) [Reserved]. For guidance see § 86.094–38.

(h) The manufacturer shall furnish or cause to be furnished to the purchaser of each new motor engine subject to the standards prescribed in § 86.004–10 or § 86.004–11, as applicable, the following:

(1) Instructions for all maintenance needed after the end of the useful life of the engine for critical emissions-related components as provided in § 86.004–25(b), including recommended practices for diagnosis, cleaning, adjustment, repair, and replacement of the component (or a statement that such component is maintenance free for the life of the engine) and instructions for accessing and responding to any emissions-related diagnostic codes that may be stored in on-board monitoring systems;

(2) A copy of the engine rebuild provisions contained in § 86.004–40.

[62 FR 54728, Oct. 21, 1997]

§ 86.004–40 Heavy-duty engine rebuilding practices.

The provisions of this section are applicable to engines subject to the standards prescribed in § 86.004–10 or § 86.004–11 and are applicable to the process of engine rebuilding (or rebuilding a portion of an engine or engine system). The process of engine rebuilding generally includes disassembly, replacement of multiple parts due to wear, and reassembly, and also may include the removal of the engine from the vehicle and other acts associated with rebuilding an engine. Any deviation from the provisions contained in this section is a prohibited act under section 203(a)(3) of the Clean Air Act (42 U.S.C. 7522(a)(3)).

(a) When rebuilding an engine, portions of an engine, or an engine system, there must be a reasonable technical basis for knowing that the resultant engine is equivalent, from an emissions standpoint, to a certified configuration (i.e., tolerances, calibrations, specifications) and the model year(s) of the resulting engine configuration must be identified. A reasonable basis would exist if:

(1) Parts installed, whether the parts are new, used, or rebuilt, are such that a person familiar with the design and function of motor vehicle engines would reasonably believe that the parts perform the same function with respect to emissions control as the original parts; and

(2) Any parameter adjustment or design element change is made only:

(i) In accordance with the original engine manufacturer's instructions; or

(ii) Where data or other reasonable technical basis exists that such parameter adjustment or design element change, when performed on the engine or similar engines, is not expected to adversely affect in-use emissions.

(b) When an engine is being rebuilt and remains installed or is reinstalled in the same vehicle, it must be rebuilt to a configuration of the same or later model year as the original engine.

When an engine is being replaced, the replacement engine must be an engine of (or rebuilt to) a configuration of the same or later model year as the original engine.

(c) At time of rebuild, emissions-related codes or signals from on-board monitoring systems may not be erased or reset without diagnosing and responding appropriately to the diagnostic codes, regardless of whether the systems are installed to satisfy requirements in §86.004–25 or for other reasons and regardless of form or interface. Diagnostic systems must be free of all such codes when the rebuilt engine is returned to service. Such signals may not be rendered inoperative during the rebuilding process.

(d) When conducting a rebuild without removing the engine from the vehicle, or during the installation of a rebuilt engine, all critical emissions-related components listed in §86.004–25(b) not otherwise addressed by paragraphs (a) through (c) of this section must be checked and cleaned, adjusted, repaired, or replaced as necessary, following manufacturer recommended practices.

(e) Records shall be kept by parties conducting activities included in paragraphs (a) through (d) of this section. The records shall include at minimum the mileage and/or hours at time of rebuild, a listing of work performed on the engine and emissions-related control components including a listing of parts and components used, engine parameter adjustments, emissions-related codes or signals responded to and reset, and work performed under paragraph (d) of this section.

(1) Parties may keep records in whatever format or system they choose as long as the records are understandable to an EPA enforcement officer or can be otherwise provided to an EPA enforcement officer in an understandable format when requested.

(2) Parties are not required to keep records of information that is not reasonably available through normal business practices including information on activities not conducted by themselves or information that they cannot reasonably access.

(3) Parties may keep records of their rebuilding practices for an engine family rather than on each individual engine rebuilt in cases where those rebuild practices are followed routinely.

(4) Records must be kept for a minimum of two years after the engine is rebuilt.

[62 FR 54729, Oct. 21, 1997]

§86.078–3 Abbreviations.

(a) The abbreviations in this section apply to this subpart and also to subparts B, D, H, I, J, N, O and P of this part and have the following meanings:

accel.—acceleration.
AECD—Auxiliary emission control device.
API—American Petroleum Institute.
ASTM—American Society for Testing and Materials.
BHP—Brake horsepower.
BSCO—Brake specific carbon monoxide.
BSHC—Brake specific hydrocarbons.
$BSNO_X$—Brake specific oxides of nitrogen.
C—Celsius.
cfh—cubic feet per hour.
CFV—Critical flow venturi.
CFV–CVS—Critical flow venturi—constant volume sampler.
CL—Chemiluminescence.
CO_2—carbon dioxide.
CO—Carbon monoxide.
conc.—concentration.
cfm—cubic feet per minute.
CT—Closed throttle.
cu. in.—cubic inch(es).
CVS—Constant volume sampler.
decel.—deceleration.
EP—End point.
evap.—evaporative.
F—Fahrenheit.
FID—Flame ionization detector.
FL—Full load.
ft.—feet.
g—gram(s).
gal.—U.S. gallon(s).
GVW—Gross vehicle weight.
GVWR—Gross vehicle weight rating.
h—hour(s).
H_2O—water.
HC—hydrocarbon(s).
HFID—Heated flame ionization detector.
Hg—mercury.
hi—high.
hp.—horsepower.
IBP—Initial boiling point.
ID—Internal diameter.
in.—inch(es).
K—kelvin.
kg—kilogram(s).
km—kilometer(s).
kPa—kilopascal(s).
lb.—pound(s).
lb.-ft.—pound-feet.
m—meter(s).
max.—maximum.

mg—milligram(s).
mi.—mile(s).
min.—minute(s).
ml—milliliter(s).
mm—millimeter(s).
mph—miles per hour.
mv—millivolt(s).
N_2—nitrogen.
NDIR—Nondispersive infrared.
NO—nitric oxide.
NO_2—nitrogen dioxide.
NO_X—oxides of nitrogen.
No.—Number.
O_2—oxygen.
Pb—lead.
pct.—percent.
PDP–CVS—Positive displacement pump—constant volume sampler.
ppm—parts per million by volume.
ppm C—parts per million, carbon.
psi—pounds per square inch.
psig—pounds per square inch gauge.
PTA—Part throttle acceleration.
PTD—Part throttle deceleration.
R—Rankin.
rpm—revolutions per minute.
RVP—Reid vapor pressure.
s—second(s).
SAE—Society of Automotive Engineers.
SI—International system of units.
sp.—speed.
TEL—Tetraethyl lead.
TML—Tetramethyl lead.
UDDS—Urban dynamometer driving schedule.
V—volt(s).
vs—versus.
W—watt(s).
WF—Weighting factor.
WOT—Wide open throttle.
wt.—weight.
′—feet.
″—inch(es).
°—degree(s).
Σ—summation.

[42 FR 32907, June 28, 1977, as amended at 45 FR 4149, Jan. 21, 1980]

§ 86.078–6 Hearings on certification.

(a)(1) After granting a request for a hearing under § 86.084–22, § 86.084–30(b), or § 86.084–30(c), the Administrator shall designate a Presiding Officer for the hearing.

(2) The General Counsel will represent the Environmental Protection Agency in any hearing under this section.

(3) If a time and place for the hearing have not been fixed by the Administrator under § 86.084.22, § 86.084–30(b), or § 86.084–30(c), the hearing shall be held as soon as practicable at a time and place fixed by the Administrator or by the Presiding Officer.

(4) In the case of any hearing requested pursuant to § 86.078–30(c)(5)(i), the Administrator may in his discretion direct that all argument and presentation of evidence be concluded within such fixed period not less than 30 days as he may establish from the date that the first written offer of a hearing is made to the manufacturer. To expedite proceedings, the Administrator may direct that the decision of the Presiding Officer (who may, but need not be the Administrator himself) shall be the final EPA decision.

(b)(1) Upon his appointment pursuant to paragraph (a) of this section, the Presiding Officer will establish a hearing file. The file shall consist of the notice issued by the Administrator under § 86.084–22, § 86.084–30(b), or § 86.084–30(c) together with any accompanying material, the request for a hearing and the supporting data submitted therewith, and all documents relating to the request for certification and all documents submitted therewith, and correspondence and other data material to the hearing.

(2) The hearing file will be available for inspection by the applicant at the office of the Presiding Officer.

(c) An applicant may appear in person, or may be represented by counsel or by any other duly authorized representative.

(d)(1) The Presiding Officer upon the request of any party, or in his discretion, may arrange for a prehearing conference at a time and place specified by him to consider the following:

(i) Simplification of the issues;

(ii) Stipulations, admissions of fact, and the introduction of documents;

(iii) Limitation of the number of expert witnesses;

(iv) Possibility of agreement disposing of all or any of the issues in dispute;

(v) Such other matters as may aid in the disposition of the hearing, including such additional tests as may be agreed upon by the parties.

(2) The results of the conference shall be reduced to writing by the Presiding Officer and made part of the record.

(e)(1) Hearings shall be conducted by the Presiding Officer in an informal

but orderly and expeditious manner. The parties may offer oral or written evidence, subject to the exclusion by the Presiding Officer of irrelevant, immaterial and repetitious evidence.

(2) Witnesses will not be required to testify under oath. However, the Presiding Officer shall call to the attention of witnesses that their statements may be subject to the provisions of title 18 U.S.C. 1001 which imposes penalties for knowingly making false statements or representations, or using false documents in any matter within the jurisdiction of any department or agency of the United States.

(3) Any witness may be examined or cross-examined by the Presiding Officer, the parties, or their representatives.

(4) Hearings shall be reported verbatim. Copies of transcripts of proceedings may be purchased by the applicant from the reporter.

(5) All written statements, charts, tabulations, and similar data offered in evidence at the hearings shall, upon a showing satisfactory to the Presiding Officer of their authenticity, relevancy, and materiality, be received in evidence and shall constitute a part of the record.

(6) Oral argument may be permitted in the discretion of the Presiding Officer and shall be reported as part of the record unless otherwise ordered by him.

(f)(1) The Presiding Officer shall make an initial decision which shall include written findings and conclusions and the reasons or basis therefor on all the material issues of fact, law, or discretion presented on the record. The findings, conclusions, and written decision shall be provided to the parties and made a part of the record. The initial decision shall become the decision of the Administrator without further proceedings unless there is an appeal to the Administrator or motion for review by the Administrator within 20 days of the date the initial decision was filed.

(2) On appeal from or review of the initial decision the Administrator shall have all the powers which he would have in making the initial decision including the discretion to require or allow briefs, oral argument, the taking of additional evidence or the remanding to the Presiding Officer for additional proceedings. The decision by the Administrator shall include written findings and conclusions and the reasons or basis therefor on all the material issues of fact, law, or discretion presented on the appeal or considered in the review.

[42 FR 32907, June 28, 1977, as amended at 49 FR 48479, Dec. 12, 1984]

§86.079–31 Separate certification.

Where possible a manufacturer should include in a single application for certification all vehicles (or engines) for which certification is required. A manufacturer may, however, choose to apply separately for certification of part of his product line. The selection of test vehicles (or test engines) and the computation of test results will be determined separately for each application.

[42 FR 45149, Sept. 8, 1977]

§86.079–32 Addition of a vehicle or engine after certification.

(a) If a manufacturer proposes to add to his product line a vehicle (or engine) of the same engine-system combination as vehicles (or engines) previously certified but which was not described in the application for certification when the test vehicle(s) (or test engine(s)) representing other vehicles (or engines) of that combination was certified, he shall notify the Administrator. Such notification shall be in advance of the addition unless the manufacturer elects to follow the procedure described in §86.079–34. This notification shall include a full description of the vehicle (or engine) to be added.

(b) The Administrator may require the manufacturer to perform such tests on the test vehicle(s) (or test engine(s)) representing the vehicle (or engine) to be added which would have been required if the vehicle (or engine) had been included in the original application for certification.

(c) If, after a review of the test reports and data submitted by the manufacturer, and data derived from any testing conducted under §86.079–29, the Administrator determines that the test vehicle(s) or test engine(s) meets all

applicable standards, the appropriate certificate will be amended accordingly. If the Administrator determines that the test vehicle(s) (or test engine(s)) does not meet applicable standards, he will proceed under § 86.079–30(b).

[42 FR 45149, Sept. 8, 1977]

§ 86.079–33 Changes to a vehicle or engine covered by certification.

(a) The manufacturer shall notify the Administrator of any change in production vehicles (or production engines) in respect to any of the parameters listed in § 86.079–24(a)(3), § 86.079–24(b)(1)(iii), § 86.079–24(b)(2) (iii) or § 86.079–24(b)(3)(iii) as applicable, giving a full description of the change. Such notification shall be in advance of the change unless the manufacturer elects to follow the procedure described in § 86.079–34.

(b) Based upon the description of the change, and data derived from such testing as the Administrator may require or conduct. The Administrator will determine whether the vehicle (or engine), as modified, would still be covered by the certificate of conformity then in effect.

(c) If the Administrator determines that the outstanding certificate would cover the modified vehicles (or engines) he will notify the manufacturer in writing. Except as provided in § 86.079–34 the change may not be put into effect prior to the manufacturer's receiving this notification. If the Administrator determines that the modified vehicles (or engines) would not be covered by the certificate then in effect, the modified vehicles (or engines) shall be treated as additions to the product line subject to § 86.079–32.

[42 FR 45149, Sept. 8, 1977]

§ 86.079–36 Submission of vehicle identification numbers.

(a) Upon request of the Administrator, the manufacturer of any light-duty vehicle or light-duty truck covered by a certificate of conformity shall, within 30 days, identify by vehicle identification number, the vehicle(s) covered by the certificate of conformity.

(b) The manufacturer of any light-duty vehicle or light-duty truck covered by a certificate of conformity shall provide to the Administrator, within 60 days of the issuance of a certificate of conformity, an explanation of the elements in any vehicle identification coding system in sufficient detail to enable the Administrator to identify those vehicles which are covered by a certificate of conformity.

[43 FR 52920, Nov. 14, 1978]

§ 86.079–39 Submission of maintenance instructions.

(a) The manufacturer shall provide to the Administrator, no later than the time of the submission required by § 86.079–23, a copy of the maintenance instructions which the manufacturer proposes to supply to the ultimate purchaser in accordance with § 86.079–38(a). The Administrator will review such instructions to determine whether they are reasonable and necessary to assure the proper functioning of the vehicle's (or engine's) emission control systems. The Administrator will notify the manufacturer of his determination whether such instructions are reasonable and necessary to assure the proper functioning of the emission control systems.

(b) Any revision to the maintenance instructions which will affect emissions shall be supplied to the Administrator at least 30 days before being supplied to the ultimate purchaser unless the Administrator consents to a lesser period of time.

[42 FR 45151, Sept. 8, 1977]

§ 86.080–12 Alternative certification procedures.

(a)(1) The Administrator will determine which of the following certification procedures (paragraph (a)(3) or (a)(4) of this section) may be used to demonstrate compliance for each heavy-duty engine, light-duty vehicle, and light-duty truck engine family for which certification is sought.

(2) The families selected for the procedure described in paragraph (a)(3) of this section will be subject to this procedure at the option of the manufacturer.

(3) The following provisions apply to those heavy-duty engine, light-duty vehicle, and light-duty truck engine families which the Administrator has specified may be subject to the abbreviated certification review procedure.

(i) The manufacturer shall satisfy all applicable requirements of part 86 necessary to demonstrate compliance with the applicable standards for each class of new motor vehicles or new motor vehicle engines for which certification is sought.

(ii) As specifically allowed by the Administrator, the manufacturer shall assume the responsibility for part or all of the decisions applicable to the family for which certification is sought and which are within the jurisdiction of the Administrator, with the exception that the Administrator will determine whether a test vehicle, or test engine, has met the applicable emission standards.

(iii) The manufacturer shall maintain, update, and correct all records and information required.

(iv) The Administrator may review a manufacturer's records at any time. At the Administrator's discretion, this review may take place either at the manufacturer's facility or at another facility designated by the Administrator.

(v) At the Administrator's request, the manufacturer shall notify the Administrator of the status of the certification program including projected schedules of those significant accomplishments specified by the Administrator.

(vi) The manufacturer shall permit the Administrator to inspect any facilities, records, and vehicles from which data are obtained under the abbreviated certification review procedure.

(vii) Upon completing all applicable requirements of part 86, the manufacturer shall submit a separate application for a certificate of conformity for each set of standards and each class of new motor vehicles or new motor vehicle engines for which certification is sought. Such application shall be made in writing to the Administrator by the manufacturer.

(A) The Administrator may approve or disapprove, in whole or in part, an application for certification according to the procedures specified in § 86.080–22(b).

(B) If, after a review of the application for certification, test reports and data submitted by the manufacturer, data obtained during an inspection, and any other pertinent data or information, the Administrator determines that a test vehicle(s) or test engine(s) has not met the requirements of the Act and the applicable subpart, he will notify the manufacturer in writing and set forth the reason(s) for the determination as specified in § 86.080–22(c).

(4) Those families which are to be subjected to the complete EPA review procedure will follow the procedures specified in this subpart with the exception of § 86.080–12(a)(3).

(b) The manufacturer may request that an engine family be subject to the abbreviated certification review procedure.

(c) The Administrator may require that an engine family previously allowed to be subject to the abbreviated certification review procedure be transferred to the complete review procedure.

[45 FR 26045, Apr. 17, 1980]

§ 86.082–2 Definitions.

(a) The definitions of this section apply to this subpart and also to subparts B, D, I, and R of this part.

(b) As used in this subpart, all terms not defined herein shall have the meaning given them in the Act:

Accuracy means the difference between a measurement and true value.

Act means part A of title II of the Clean Air Act, 42 U.S.C. as amended, 7521, *et seq.*

Administrator means the Administrator of the Environmental Protection Agency or his authorized representative.

Auxiliary Emission Control Device (AECD) means any element of design which senses temperature, vehicle speed, engine RPM, transmission gear, manifold vacuum, or any other parameter for the purpose of activating, modulating, delaying, or deactivating the operation of any part of the emission control system.

Basic engine means a unique combination of manufacturer, engine displacement, number of cylinders, fuel system

(as distinguished by number of carburetor barrels or use of fuel injection), catalyst usage, and other engine and emission control system characteristics specified by the Administrator.

Basic vehicle frontal area means the area enclosed by the geometric projection of the basic vehicle along the longitudinal axis, which includes tires but excludes mirrors and air deflectors, onto a plane perpendicular to the longitudinal axis of the vehicle.

Body style means a level of commonality in vehicle construction as defined by number of doors and roof treatment (e.g., sedan, convertible, fastback, hatchback).

Body type means a name denoting a group of vehicles that are either in the same car line or in different car lines provided the only reason the vehicles qualify to be considered in different car lines is that they are produced by a separate division of a single manufacturer.

Calibrating gas means a gas of known concentration which is used to establish the response curve of an analyzer.

Calibration means the set of specifications, including tolerances, unique to a particular design, version, or application of a component or components assembly capable of functionally describing its operation over its working range.

Car line means a name denoting a group of vehicles within a make or car division which has a degree of commonality in construction (e.g., body, chassis). Car line does not consider any level of decor or opulence and is not generally distinguished by characteristics as roofline, number of doors, seats, or windows except for station wagons or light-duty trucks. Station wagons and light-duty trucks are considered to be different car lines than passenger cars.

Configuration means a subclassification of an engine-system combination on the basis of engine code, inertia weight class, transmission type and gear ratios, final drive ratio, and other parameters which may be designated by the Administrator.

Crankcase emissions means airborne substances emitted to the atmosphere from any portion of the engine crankcase ventilation or lubrication systems.

Curb-idle for manual transmission code heavy-duty engines means the manufacturer's recommended engine speed with the transmission in neutral or with the clutch disengaged. For automatic transmission code heavy-duty engines, curb-idle means the manufacturer's recommended engine speed with the automatic transmission in gear and the output shaft stalled.

Defeat Device means an AECD that reduces the effectiveness of the emission control system under conditions which may reasonably be expected to be encountered in normal urban vehicle operation and use, unless (1) such conditions are substantially included in the Federal emission test procedure, (2) the need for the AECD is justified in terms of protecting the vehicle against damage or accident, or (3) the AECD does not go beyond the requirements of engine starting.

Diurnal breathing losses means evaporative emissions as a result of the daily range in temperature.

Drive train configuration means a unique combination of engine code, transmission configuration, and axle ratio.

Dynamometer-idle for automatic transmission code heavy-duty engines means the manufacturer's recommended engine speed without a transmission that simulates the recommended engine speed with a transmission and with the transmission in neutral.

Engine code means a unique combination, within an engine-system combination, of displacement, carburetor (or fuel injection) calibration, choke calibration, distributor calibration, auxiliary emission control devices, and other engine and emission control system components specified by the Administrator.

Engine family means the basic classification unit of a manufacturer's product line used for the purpose of test fleet selection and determined in accordance with § 86.082–24.

Engine family group means a combination of engine families for the purpose of determining a minimum deterioration factor under the Alternative Durability Program.

Engine-system combination means an engine family-exhaust emission control system combination.

EPA Enforcement Officer means any officer of employee of the Environmental Protection Agency so designated in writing by the Administrator (or by his designee).

Evaporative emission code means a unique combination, in an evaporative emission family-evaporative emission control system combination, of purge system calibrations, fuel tank and carburetor bowl vent calibrations and other fuel system and evaporative emission control system components and calibrations specified by the Administrator.

Evaporative emissions means hydrocarbons emitted into the atmosphere from a motor vehicle, other than exhaust and crankcase emissions.

Evaporative vehicle configuration means a unique combination of basic engine, engine code, body type, and evaporative emission code.

Exhaust emissions means substances emitted to the atmosphere from any opening downstream from the exhaust port of a motor vehicle engine.

Fuel evaporative emissions means vaporized fuel emitted into the atmosphere from the fuel system of a motor vehicle.

Fuel system means the combination of fuel tank(s), fuel pump, fuel lines, and carburetor or fuel injection components, and includes all fuel system vents and fuel evaporative emission control system components.

Gross vehicle weight means the manufacturer's gross weight rating for the individual vehicle.

Gross vehicle weight rating (GVWR) means the value specified by the manufacturer as the maximum design loaded weight of a single vehicle.

Hang-up refers to the process of hydrocarbon molecules being adsorbed, condensed, or by any other method removed from the sample flow prior to reaching the instrument detector. It also refers to any subsequent desorption of the molecules into the sample flow when they are assumed to be absent.

Heavy-duty engine means any engine which the engine manufacturer could reasonably expect to be used for motive power in a heavy-duty vehicle.

Heavy-duty vehicle means any motor vehicle rated at more than 8,500 pounds GVWR or that has a vehicle curb weight of more than 6,000 pounds or that has a basic vehicle frontal area in excess of 45 square feet.

High altitude means any elevation over 1,219 meters (4,000 feet).

High-altitude conditions means a test altitude of 1,620 meters (5,315 feet), plus or minus 100 meters (328 feet), or equivalent observed barometric test conditions of 83.3±1 kilopascals.

High-altitude reference point means an elevation of 1,620 meters (5,315 feet) plus or minus 100 meters (328 feet), or equivalent observed barometric test conditions of 83.3 kPa (24.2 inches Hg), plus or minus 1 kPa (0.30 Hg).

Hot-soak losses means evaporative emissions after termination of engine operation.

Incomplete truck means any truck which does not have the primary load carrying device or container attached.

Inertia weight class means the class, which is a group of test weights, into which a vehicle is grouped based on its loaded vehicle weight in accordance with the provisions of part 86.

Intermediate speed means peak torque speed if peak torque speed occurs between 60 and 75 percent of rated speed. If the peak torque speed is less than 60 percent of rated speed, intermediate speed means 60 percent of rated speed. If the peak torque speed is greater than 75 percent of rated speed, intermediate speed means 75 percent of rated speed.

Light-duty truck means any motor vehicle rated at 8,500 pounds GVWR or less which as a vehicle curb weight of 6,000 pounds or less and which has a basic vehicle frontal area of 45 square feet or less, which is:

(1) Designed primarily for purposes of transportation of property or is a derivation of such a vehicle, or

(2) Designed primarily for transportation of persons and has a capacity of more than 12 persons, or

(3) Available with special features enabling off-street or off-highway operation and use.

Light-duty vehicle means a passenger car or passenger car derivative capable of seating 12 passengers or less.

Loaded vehicle weight means the vehicle curb weight plus 300 pounds.

Low altitude means any elevation equal to or less than 1,219 meters (4,000 feet).

Low altitude conditions means a test altitude less than 549 meters (1,800 feet).

Malfunction means not operating according to specifications (e.g., those specifications listed in the application for certification).

Maximum rated horsepower means the maximum brake horsepower output of an engine as stated by the manufacturer in his sales and service literature and his application for certification under § 86.082–21.

Maximum rated torque means the maximum torque produced by an engine as stated by the manufacturer in his sales and service literature and his application for certification under § 86.082–21.

Military engine means any engine manufactured solely for the Department of Defense to meet military specifications.

Model means a specific combination of car line, body style, and drivetrain configuration.

Model type means a unique combination of car line, basic engine, and transmission class.

Model year means the manufacturer's annual production period (as determined by the Administrator) which includes January 1 of such calendar year: *Provided,* That if the manufacturer has no annual production period, the term *model year* shall mean the calendar year.

Nominal fuel tank capacity means the volume of the fuel tank(s), specified by the manufacturer to the nearest tenth of a U.S. gallon, which may be filled with fuel from the fuel tank filler inlet.

Opacity means the fraction of a beam of light, expressed in percent, which fails to penetrate a plume of smoke.

Option means any available equipment or feature not standard equipment on a model.

Oxides of nitrogen means the sum of the nitric oxide and nitrogen dioxide contained in a gas sample as if the nitric oxide were in the form of nitrogen dioxide.

Peak torque speed means the speed at which an engine develops maximum torque.

Percent load means the fraction of the maximum available torque at a specified engine speed.

Precision means the standard deviation of replicated measurements.

Rated speed means the speed at which the manufacturer specifies the maximum rated horsepower of an engine.

Reconfigured emission-data vehicle means an emission-data vehicle obtained by modifying a previously used emission-data vehicle to represent another emission-data vehicle.

Running loss means fuel evaporative emissions resulting from an average trip in an urban area or the simulation of such a trip.

Scheduled maintenance means any adjustment, repair, removal, disassembly, cleaning, or replacement of vehicle components or systems which is performed on a periodic basis to prevent part failure or vehicle (if the engine were installed in a vehicle) malfunction.

Smoke means the matter in the exhaust emission which obscures the transmission of light.

Span gas means a gas of known concentration which is used routinely to set the output level of an analyzer.

Standard equipment means those features or equipment which are marketed on a vehicle over which the purchaser can exercise no choice.

System includes any motor vehicle engine modification which controls or causes the reduction of substances emitted from motor vehicles.

Tank fuel volume means the volume of fuel in the fuel tank(s), which is determined by taking the manufacturer's nominal fuel tank(s) capacity and multiplying by 0.40, the result being rounded using ASTM E 29–67 to the nearest tenth of a U.S. gallon.

Test weight means the weight, within an inertia weight class, which is used in the dynamometer testing of a vehicle, and which is based on its loaded vehicle weight in accordance with the provisions of part 86.

Throttle means the mechanical linkage which either directly or indirectly controls the fuel flow to the engine.

Transmission class means the basic type of transmission, e.g., manual, automatic, semiautomatic.

Transmission configuration means a unique combination, within a transmission class, of the number of the forward gears and, if applicable, overdrive. The Administrator may further subdivide a transmission configuration (based on such criteria as gear ratios, torque convertor multiplication ratio, stall speed and shift calibration, etc.), if he determines that significant fuel economy or exhaust emission differences exist within that transmission configuration.

Unscheduled maintenance means any adjustment, repair, removal, disassembly, cleaning, or replacement of vehicle components or systems which is performed to correct a part failure or vehicle (if the engine were installed in a vehicle) malfunction.

Useful life means:

(1) For light-duty vehicles and light-duty trucks a period of use of 5 years or 50,000 miles, whichever first occurs.

(2) For gasoline-fueled heavy-duty engines a period of use of 5 years or 50,000 miles of vehicle operation or 1,500 hours of engine operation (or an equivalent period of 1,500 hours of dynamometer operation), whichever first occurs.

(3) For diesel heavy-duty engines a period of use of 5 years or 100,000 miles of vehicle operation or 3,000 hours of engine operation (or an equivalent period of 1,000 hours of dynamometer operation), whichever first occurs.

Van means a light-duty truck having an integral enclosure, fully enclosing the driver compartment and load carrying device, and having no body sections protruding more than 30 inches ahead of the leading edge of the windshield.

Vehicle configuration means a unique combination of basic engine, engine code, inertia weight class, transmission configuration, and axle ratio.

Vehicle curb weight means the actual or the manufacturer's estimated weight of the vehicle in operational status with all standard equipment, and weight of fuel at nominal tank capacity, and the weight of optional equipment computed in accordance with §86.082–24; incomplete light-duty trucks shall have the curb weight specified by the manufacturer.

Zero (0) hours means that point after normal assembly line operations and adjustments are completed and before ten (10) additional operating hours have been accumulated, including emission testing, if performed.

Zero (0) miles means that point after initial engine starting (not to exceed 100 miles of vehicle operation, or three hours of engine operation) at which normal assembly line operations and adjustments are completed, and including emission testing, if performed.

[46 FR 50475, Oct. 13, 1981, and 47 FR 49807, 49808, Nov. 2, 1982; 62 FR 31233, June 6, 1997]

§86.082–34 Alternative procedure for notification of additions and changes.

(a) A manufacturer may, in lieu of notifying the Administrator in advance of an addition of a vehicle (or engine) under §86.079–32 or a change in a vehicle (or engine) under §86.079–33, notify the Administrator concurrently with making an addition of a vehicle or a change in a vehicle, if the manufacturer determines that following the change all vehicles (or engines) effected by the addition or change will still meet the applicable emission standards. Such notification shall include a full description of the addition or change and any supporting documentation the manufacturer may desire to include to support the manufacturer's determination. The manufacturer's determination that the addition or change does not cause noncompliance shall be based on an engineering evaluation of the addition or change and/or testing.

(b) The Administrator may require that additional emission testing be performed to support the manufacturers original determination submitted in paragraph (a) of this section. If additional testing is required the Administrator shall proceed as in §86.079–32 (b) and (c) or §86.079–33 (b) and (c) as appropriate. Additional test data, if requested, must be provided within 30 days of the request or the manufacturer must rescind the addition or change immediately. The Administrator may grant additional time to

complete testing. If based on this additional testing or any other information, the Administrator determines that the vehicles effected by the addition or change do not meet the applicable standards the Administrator will notify the manufacturer to rescind the addition or change immediately upon receipt of the notification.

(c) Election to produce vehicles (or engines) under this section will be deemed to be a consent to recall all vehicles (or engines) which the Administrator determines under § 86.079–32(c) do not meet applicable standards, and to cause such nonconformity to be remedied at no expense to the owner.

[46 FR 50486, Oct. 13, 1981, and 47 FR 49807, Nov. 2, 1982]

§ 86.084–2 Definitions.

The definitions in § 86.082–2 remain effective. The definitions listed in this section apply beginning with the 1984 model year.

Approach angle means the smallest angle in a plan side view of an automobile, formed by the level surface on which the automobile is standing and a line tangent to the front tire static loaded radius arc and touching the underside of the automobile forward of the front tire.

Axle clearance means the vertical distance from the level surface on which an automobile is standing to the lowest point on the axle differential of the automobile.

Breakover angle means the supplement of the largest angle, in the plan side view of an automobile, that can be formed by two lines tangent to the front and rear static loaded radii arcs and intersecting at a point on the underside of the automobile.

Curb-idle means:

(1) For manual transmission code light-duty trucks, the engine speed with the transmission in neutral or with the clutch disengaged and with the air conditioning system, if present, turned off. For automatic transmission code light-duty trucks, curb-idle means the engine speed with the automatic transmission in the Park position (or Neutral position if there is no Park position), and with the air conditioning system, if present, turned off.

(2) For manual transmission code heavy-duty engines, the manufacturer's recommended engine speed with the clutch disengaged. For automatic transmission code heavy-duty engines, curb idle means the manufacturer's recommended engine speed with the automatic transmission in gear and the output shaft stalled. (Measured idle speed may be used in lieu of curb-idle speed for the emission tests when the difference between measured idle speed and curb idle speed is sufficient to cause a void test under either § 86.1341 or § 86.884–7 but not sufficient to permit adjustment in accordance with § 86.085–25.)

Departure angle means the smallest angle, in a plan side view of an automobile, formed by the level surface on which the automobile is standing and a line tangent to the rear tire static loaded radius arc and touching the underside of the automobile rearward of the rear tire.

Emission-related maintenance means that maintenance which does substantially affect emissions or which is likely to affect the deterioration of the vehicle or engine with respect to emissions, even if the maintenance is performed at some time other than that which is recommended.

Heavy-passenger cars means, for the 1984 model year only, a passenger car or passenger car derivative capable of seating 12 passengers or less, rated at 6,000 pounds GVW or more and having an equivalent test weight of 5,000 pounds or more.

Non-emission related maintenance means that maintenance which does not substantially affect emissions and which does not have a lasting effect on the deterioration of the vehicle or engine with respect to emissions once the maintenance is performed at any particular date.

Scheduled maintenance means any adjustment, repair, removal, disassembly, cleaning, or replacement of vehicle components or systems which is performed on a periodic basis to prevent part failure or vehicle (if the engine were installed in a vehicle) malfunction, or anticipated as necessary to correct an overt indication of vehicle malfunction or failure for which periodic maintenance is not appropriate.

Special features enabling off-street or off-highway operation and use means a vehicle:

(1) That has 4-wheel drive; and

(2) That has at least four of the following characteristics calculated when the automobile is at curb weight, on a level surface, with the front wheels parallel to the vehicle's longitudinal centerline, and the tires inflated to the manufacturer's recommended pressure;

(i) Approach angle of not less than 28 degrees.

(ii) Breakover angle of not less than 14 degrees.

(iii) Departure angle of not less than 20 degrees.

(iv) Running clearance of not less than 8 inches.

(v) Front and rear axle clearances of not less than 7 inches each.

Static loaded radius arc means a portion of a circle whose center is the center of a standard tire-rim combination of an automobile and whose radius is the distance from that center to the level surface on which the automobile is standing, measured with the automobile at curb weight, the wheel parallel to the vehicle's longitudinal centerline, and the tire inflated to the manufacturer's recommended pressure.

Unscheduled maintenance means any adjustment, repair, removal disassembly, cleaning, or replacement of vehicle components or systems which is performed to correct a part failure or vehicle (if the engine were installed in a vehicle) malfunction which was not anticipated.

Useful life means:

(a) For light-duty vehicles a period of use of 5 years or 50,000 miles, whichever first occurs.

(b)(1) For a light-duty truck engine family or heavy-duty engine family, the average period of use up to engine retirement or rebuild, whichever occurs first, as determined by the manufacturer under § 86.084–21(b)(4)(ii)(B).

(2) For a specific light-duty truck or heavy-duty engine, the period of use represented by the first occurring of the following:

(i) The engine reaches the point of needing to be rebuilt, according to the criteria established by the manufacturer under § 86.084–21(b)(4)(ii)(C), or

(ii) The engine reaches its engine family's useful life.

(3) If the useful life of a specific light-duty truck or heavy-duty engine is found to be less than 5 years or 50,000 miles (or the equivalent), the useful life shall be a period of use of 5 years or 50,000 miles (or the equivalent), whichever occurs first, as required by section 202(d)(2) of the Act.

(4) For purpose of identification this option shall be known as the average useful-life period.

(c)(1) As an option for a light-duty truck engine family, a period of use of 12 years or 130,000 miles, whichever occurs first.

(2) As an option for a gasoline heavy-duty engine family, a period of use of 10 years or 120,000 miles, whichever occurs first.

(3) As an option for a diesel heavy-duty engine family, a period of use of 10 years or 120,000 miles, whichever occurs first, for engines certified for use in vehicles of less than 19,500 pounds GVWR; a period of use of 10 years or 200,000 miles, whichever occurs first, for engines certified for use in vehicles of 19,501–26,000 pounds GVWR; or, a period of use of 10 years or 275,000 miles, whichever occurs first, for engines certified for use in vehicles whose GVWR exceeds 26,000 pounds.

(4) As an option for both light-duty truck and heavy-duty engine families, an alternate full-life value assigned by the Administrator under § 86.084–21(b)(4)(ii)(B)(*4*).

(5) For purpose of identification these options shall be known as the assigned useful-life period options.

(6) For those light-duty truck and heavy-duty engine families using the assigned useful-life period options, the warranty period for emissions defect warranty and emissions performance warranty shall be 5 years/50,000 miles for light-duty trucks, 5 years/50,000 miles for gasoline heavy-duty engines and for diesel heavy-duty engines certified for use in vehicle of less than 19,501 lbs. GVWR, and 5 years/100,000 miles for all other diesel heavy-duty engines. However, in no case may this period be less than the basic mechanical warranty period.

(7) The assigned useful-life period options, as detailed in paragraphs (c)(1)

through (c)(6) of this section, are applicable for the 1984 model year only.

(d)(1) As an option for the 1984 model year and for the 1984 model year only, the useful life of light-duty trucks and heavy-duty engine families may be defined as prescribed in § 86.077–2.

(2) For purpose of identification this option shall be known as the half-life useful-life option.

[45 FR 63747, Sept. 25, 1980, as amended at 47 FR 49811, Nov. 2, 1982; 48 FR 1412, Jan. 12, 1983; 48 FR 48607, Oct. 19, 1983; 49 FR 48136, Dec. 10, 1984]

§ 86.084–4 Section numbering; construction.

(a) *Section numbering.* (1) The model year of initial applicability is indicated by the last two digits of the 5-digit group. A section remains in effect for subsequent model years until it is superseded. The number following the hyphen designates what previous section is replaced by a future regulation.

Examples: Section 86.077–6 applies to the 1977 and subsequent model years until superseded. If a § 86.080–6 is promulgated it would take effect with the 1980 model year; § 86.077–6 would not apply after the 1979 model year. Section 86.077–10 would be replaced by § 86.078–10 beginning with the 1978 model year.

(2) Where a section still in effect references a section that has been superseded, the reference shall be interpreted to mean the superseding section.

(b) A section reference without a model year suffix refers to the section applicable for the appropriate model year.

(c) *Construction.* Except where indicated, the language in this subpart applies to both vehicles and engines. In many instances, language referring to engines is enclosed in parentheses and immediately follows the language discussing vehicles.

[45 FR 63747, Sept. 25, 1980, as amended at 59 FR 48492, Sept. 21, 1994]

§ 86.084–40 Automatic expiration of reporting and recordkeeping requirements.

(a) [Reserved]

(b) *Light-duty trucks and heavy-duty engines.* (1) All of the recordkeeping and reporting requirements in this subpart for which 1984 is the first model year of implementation will automatically expire on December 31, 1988, unless the Administrator acts to retain them.

(2) If the Administrator determines that the reporting and recordkeeping requirements should be retained she/he will also at that time establish the subsequent date of expiration, which will not be later than December 31, 1993.

[45 FR 63770, Sept. 25, 1980]

§ 86.085–1 General applicability.

(a) The provisions of this subpart apply to 1985 and later model year new gasoline-fueled and diesel light-duty vehicles, 1985 and later model year new gasoline-fueled and diesel light-duty trucks, and 1985 and later model year new gasoline-fueled and diesel heavy-duty engines.

(b) *Optional applicability.* A manufacturer may request to certify any heavy-duty vehicle 10,000 pounds GVWP or less in accordance with the light-duty truck provisions. Heavy-duty engine or vehicle provisions do not apply to such a vehicle.

(c) [Reserved]

(d) *Alternative Durability Program.* For 1985 and later model year light-duty vehicles and light-duty trucks, a manufacturer may elect to participate in the Alternative Durability Program. This optional program provides an alternative method of determining exhaust emission control system durability. The general procedures and a description of the programs are contained in § 86.085–13 and specific provisions on test vehicles and compliance procedures are contained in §§ 86.085–24 and 86.085–28 respectively.

(e) *Small volume manufacturers.* Special certification procedures are available for any manufacturer whose projected combined U.S. sales of light-duty vehicles, light-duty trucks, and heavy-duty engines in its product line are fewer than 10,000 units for the model year in which the manufacturer seeks certification. In order to certify its product line under these optional procedures, the small-volume manufacturer must first obtain the Administrator's approval. Vehicles produced at facilities leased, operated, controlled, supervised, or in 10 percent or greater part owned by the manufacturer shall

be counted in calculating the total sales of the manufacturer. The small-volume manufacturer's certification procedures are described in § 86.084–14.

(f) *Optional Procedures for Determining Exhaust Opacity.* (1) The provisions of subpart I apply to tests which are performed by the Administrator, and optionally, by the manufacturer.

(2) Measurement procedures, other than that described in subpart I, may be used by the manufacturer provided the manufacturer satisfies the requirements of § 86.085–23(f).

(3) When a manufacturer chooses to use an alternative measurement procedure it has the responsibility to determine whether the results obtained by the procedure will correlate with the results which would be obtained from the measurement procedure in subpart I. Consequently, the Administrator will not routinely approve or disapprove any alternative opacity measurement procedure or any associated correlation data which the manufacturer elects to use to satisfy the data requirements of subpart I.

(4) If a confirmatory test(s) is performed and the results indicate there is a systematic problem suggesting that the data generated under an optional alternative measurement procedure do not adequately correlate with subpart I data, EPA may require that all certificates of conformity not already issued be based on data from subpart I procedures.

(Secs. 202, 203, 206, 207, 208, 301a, Clean Air Act as amended; 42 U.S.C. 7521, 7522, 7525, 7541, 7542, 7601(a)

[48 FR 22548, May 19, 1983, as amended at 50 FR 10648, Mar. 15, 1985; 51 FR 24608, July 7, 1986]

§ 86.085–2 Definitions.

The definitions of § 86.084–2 remain effective. The definitions listed in this section apply beginning with the 1985 model year.

Abnormally treated vehicle, any diesel light-duty vehicle or diesel light-duty truck that is operated for less than five miles in a 30 day period immediately prior to conducting a particulate emissions test.

Composite particulate standard, for a manufacturer which elects to average diesel light-duty vehicles and diesel light-duty trucks together in the particulate averaging program, means that standard calculated according to the following equation and rounded to the nearest hundredth gram-per-mile:

$$\frac{(\mathrm{PROD_{LDV}})(\mathrm{STD_{LDV}})+(\mathrm{PROD_{LDT}})(\mathrm{STD_{LDT}})}{(\mathrm{PROD_{LDV}})+(\mathrm{PROD_{LDT}})} = \text{Manufacturer composite particulate standard}$$

Where:

$\mathrm{PROD_{LDV}}$ represents the manufacturer's total diesel light-duty vehicle production for those engine families being included in the average for a given model year.

$\mathrm{STD_{LDV}}$ represents the light-duty vehicle particulate standard.

$\mathrm{PROD_{LDT}}$ represents the manufacturer's total diesel light-duty truck production for those engine families being included in the average for a given model year.

$\mathrm{STD_{LDT}}$ represents the light-duty truck particulate standard.

Family particulate emission limit means the diesel particulate emission level to which an engine family is certified in the particulate averaging program, expressed to an accuracy of one hundredth gram-per-mile.

Incomplete gasoline-fueled heavy-duty vehicle means any gasoline-fueled heavy-duty vehicle which does not have the primary load-carrying device, or passenger compartment, or engine compartment or fuel system attached.

Production-weighted average means the manufacturer's production-weighted average particulate emission level, for certification purposes, of all of its diesel engine families included in the particulate averaging program. It is calculated at the end of the model year by multiplying each family particulate emission limit by its respective production, summing these terms, and dividing the sum by the total production of the effected families. Those vehicles

produced for sale in California or at high altitude shall each be averaged separately from those produced for sale in any other area.

Primary intended service class means:

(a) The primary service application group for which a heavy-duty diesel engine in designed and marketed, as determined by the manufacturer. The primary intended service classes are designated as light, medium, and heavy heavy-duty diesel engines. The determination is based on factors such as vehicle GVW, vehicle usage and operating patterns, other vehicle design characteristics, engine horsepower, and other engine design and operating characteristics.

(1) Light heavy-duty diesel engines usually are non-sleeved and not designed for rebuild; their rated horsepower generally ranges from 70 to 170. Vehicle body types in this group might include any heavy-duty vehicle built for a light-duty truck chassis, van trucks, multi-stop vans, recreational vehicles, and some single axle straight trucks. Typical applications would include personal transportation, light-load commercial hauling and delivery, passenger service, agriculture, and construction. The GVWR of these vehicles is normally less than 19,500 lbs.

(2) Medium heavy-duty diesel engines may be sleeved or non-sleeved and may be designed for rebuild. Rated horsepower generally ranges from 170 to 250. Vehicle body types in this group would typically include school buses, tandem axle straight trucks, city tractors, and a variety of special purpose vehicles such as small dump trucks, and trash compactor trucks. Typical applications would include commercial short haul and intra-city delivery and pickup. Engines in this group are normally used in vehicles whose GVWR varies from 19,500–33,000 lbs.

(3) Heavy heavy-duty diesel engines are sleeved and designed for multiple rebuilds. Their rated horsepower generally exceeds 250. Vehicles in this group are normally tractors, trucks, and buses used in inter-city, long-haul applications. These vehicles normally exceed 33,000 lbs GVWR.

Useful life means:

(a) For light-duty vehicles a period of use of 5 years or 50,000 miles, whichever first occurs.

(b) For a light-duty truck engine family, a period of use of 11 years or 120,000 miles, whichever occurs first.

(c) For a gasoline-fueled heavy-duty engine family (and in the case of evaporative emission regulations, for gasoline-fueled heavy-duty vehicles), a period of use of 8 years or 110,000 miles, whichever first occurs.

(d) For a diesel heavy-duty engine family:

(1) For light heavy-duty diesel engines, a period of use of 8 years or 110,000 miles, whichever first occurs.

(2) For medium heavy-duty diesel engines, a period of use of 8 years or 185,000 miles, whichever first occurs.

(3) For heavy heavy-duty diesel engines, a period of use of 8 years or 290,000 miles, whichever first occurs.

(e) As an option for both light-duty truck and heavy-duty engine families, an alternative useful life period assigned by the Administrator under the provisions of paragraph (f) of § 86.085–21.

(f) The useful-life period for purposes of the emissions defect warranty and emissions performance warranty shall be a period of 5 years/50,000 miles whichever first occurs, for light-duty trucks, gasoline heavy-duty engines, and light heavy-duty diesel engines. For all other heavy-duty diesel engines the aforementioned period is 5 years/100,000 miles, whichever first occurs. However, in no case may this period be less than the manufacturer's basic mechanical warranty period for the engine family.

[48 FR 33462, July 21, 1983, as amended at 48 FR 52184, Nov. 16, 1983; 52 FR 47863, Dec. 16, 1987]

§ 86.085–13 Alternative Durability Program.

(a) The procedures of the Alternative Durability Program are optional. Manufacturers may use these optional procedures to determine deterioration factors instead of using the procedures that this subpart otherwise requires.

(b) The optional procedures of the Alternative Durability Program apply only to light-duty vehicles and light-duty trucks, and are effective for the

1985 and later model years. All manufacturers of these vehicles are eligible to participate in this program.

(c) For engine families subject to the procedures of the Alternative Durability Program, the manufacturer shall submit deterioration factors to the Administrator for approval to use them for certification. The Administrator shall approve the use of deterioriation factors that:

(1) The manufacturer attests are representative of the durability performance of its vehicles in actual field use when maintained according to the manufacturer's maintenance instructions (as limited under §86.084–25(a)), and

(2) Are equal to or greater than the deterioration factors that EPA determines under paragraph (d) of this section.

(d) EPA shall determine minimum deterioration factors for engine families subject to the Alternative Durability Program. This determination shall be based on a procedure of grouping engine families (see §86.085–24(a)) in order to use historical certification data to determine deterioration factors for each engine family group. The historical data shall be updated yearly through the testing of production durability-data vehicles. Test vehicle requirements under these procedures are contained in §86.085–24(h) and compliance requirements are contained in §86.085–28 (a)(5) and (b)(5).

(e) *Request Procedures.* (1) A manufacturer wishing to participate in the Alternative Durability Program must submit to the Administrator, for each model year, a written request describing the engine families that the manufacturer elects to be included in the program.

(2) The Administrator may declare ineligible any engine family for which the Administrator determines there is unreasonable risk in determining a deterioration factor using the methods of the Alternative Durability Program. Furthermore, the Administrator may limit the number of engine families within the manufacturer's product line that are eligible for the Alternative Durability Program.

(3) Upon approval of the manufacturer's request to participate, the Administrator and the manufacturer may enter into a written agreement prescribing the terms and conditions of the program. This agreement shall be equitable as compared to agreements entered into with other manufacturers. The agreement shall specify the following:

(i) The engine families to be included in the program and the engine family groups that have been established by the provisions of §86.085–24(a) (8) and (9).

(ii) The procedures for the selection of production durability-data vehicles specified under the provisions of §86.085–24(h).

(iii) The procedures for the determination of minimum exhaust emission deterioration factors for each engine family group.

(f) *Withdrawal from Alternative Durability Program.* (1) Subject to the conditions of the following paragraphs, a manufacturer may, at any time, withdraw all of its product line or separate engine family groups from this program. Only entire engine family groups may be withdrawn.

(2) Once any engine family in an engine family group is certified using deterioration factors determined in the Alternative Durability Program, the manufacturer shall operate and test the production durability-data vehicles specified in §86.085–24(h) in accordance with the procedures of this part.

(3) The Administrator shall notify the manufacturer if a nonconformity of a category of vehicles within the engine family group is indicated by the production durability data. For the purpose of this paragraph, a nonconformity is determined to exist if:

(i) Any emission-data vehicle within an engine family of the model year most recently certified under the Alternative Durability Program is projected to exceed an emission standard by applying deterioration factors generated by a production durability-data vehicle within the same engine family, or

(ii) Any of the most recent model year's production durability-data vehicle configurations tested under paragraph (f)(2) of this section line crosses as defined in §86.085–28(a)(5)(ii)(C). For the purpose of this paragraph, data

from identical vehicles will be averaged as under § 86.085–28(a)(4)(i) (A) and (B).

(4) If the Administrator notifies a manufacturer of such a nonconformity, the manufacturer shall submit, by a date specified by the Administrator, a plan to remedy the nonconformity which is acceptable to the Director, Office of Mobile Sources. For the purpose of this paragraph, the term ''remedy the nonconformity'' will have the same meaning as it does when it appears in section 207(c)(1) of the Clean Air Act.

(5) The manufacturer shall comply with the terms of the remedial plan approved by the Director, Office of Mobile Sources.

(6) If a manufacturer does not comply with the requirements of paragraph (f)(2), (4), or (5) of this section, the Administrator may deem the certificate of conformity for the affected engine families void *ab initio.*

[48 FR 22548, May 19, 1983]

§ 86.085–20 Incomplete vehicles, classification.

(a) An incomplete truck less than 8,500 pounds gross vehicle weight rating shall be classified by the manufacturer as a light-duty truck or as a heavy-duty vehicle. Incomplete light-duty trucks shall be described in the manufacturer's application for certification. The frontal area and curb weight used for certification purposes shall be specified on the label required in § 86.085–35(d). Incomplete heavy-duty trucks must be labeled as required in § 86.085–35(e) and § 86.085–35(g).

(b) [Reserved]

[48 FR 1439, Jan. 12, 1983]

§ 86.085–37 Production vehicles and engines.

(a) Any manufacturer obtaining certification under this part shall supply to the Administrator, upon request, a reasonable number of production vehicles (or engines) selected by the Administrator which are representative of the engines, emission control systems, fuel systems, and transmission offered and typical of production models available for sale under the certificate. These vehicles (or engines) shall be supplied for testing at such time and place and for such reasonable periods as the Administrator may require. Heavy-duty engines supplied under this paragraph may be required to be mounted in chassis and appropriately equipped for operation on a chassis dynamometer.

(b)(1) Any manufacturer of light-duty vehicles or light-duty trucks obtaining certification under this part shall notify the Administrator, on a yearly basis, of the number of vehicles domestically produced for sale in the United States and the number of vehicles produced and imported for sale in the United States during the preceding year. Such information shall also include the number of vehicles produced for sale pursuant to § 88.204–94(b) of this chapter. A manufacturer may elect to provide this information every 60 days instead of yearly by combining it with the notification required under § 86.079–36. The notification must be submitted 30 days after the close of the reporting period. A manufacturer may combine the information required under § 86.1712(b) with the information included in paragraphs (b)(1) (i) through (iv) of this section into the report required under this section. The vehicle production information required shall be submitted as follows:

(i) Total production volume expressed in terms of units produced;

(ii) Model type production volume, expressed for each model type in terms of units produced and as a percentage of total production;

(iii) Base level production volume, expressed for each base level in terms of units produced and as percentage of:

(A) Total production of its respective model type(s), and

(B) Total production; and

(iv) Vehicle configuration production volume, expressed for each vehicle configuration in terms of units produced, and as a percentage of the total production of its respective base level. In addition, each vehicle configuration shall be identified by its appropriate engine-system combination.

(2) All light-duty vehicles and light-duty trucks covered by a certificate of conformity under § 86.082–30(a) shall be adjusted by the manufacturer to the ignition or injection timing specification detailed in § 86.079–36(a)(1)(iii)(D).

(c) Any heavy-duty engine or gasoline-fueled heavy-duty vehicle manufacturer obtaining certification under this part shall notify the Administrator, on a yearly basis, of the number of engines or vehicles of such engine family-evaporative emission family-engine displacement-exhaust emission control system-fuel system combination produced for sale in the United States during the preceding year.

(d) The following definitions apply to this section:

(1) *Model type* means a unique combination of car line, basic engine, and transmission class.

(2) *Base level* means a unique combination of basic engine, inertia weight, and transmission class.

(3) *Vehicle configuration* means a unique combination of basic engine, engine code, inertia weight, transmission configuration, and axle ratio within a base level.

[48 FR 1455, Jan. 12, 1983, as amended at 59 FR 50073, Sept. 30, 1994; 62 FR 31233, June 6, 1997]

EFFECTIVE DATE NOTE: At 62 FR 31233, June 6, 1997, §86.085–37 was amended by revising paragraph (b)(1) introductory text, effective Aug. 5, 1997. That text contains information collection and recordkeeping requirements and will not become effective until approval has been given by the Office of Management and Budget.

§86.087–2 Definitions.

Composite particulate standard for a manufacturer which elects to average diesel light-duty vehicles and diesel light-duty trucks with a loaded vehicle weight equal to or less than 3,750 lbs (LDDT1s) together in the particulate averaging program, means that standard calculated according to the following equation and rounded to the nearest hundredth gram per mile:

$$\frac{(\mathrm{PROD}_{\mathrm{LDV}})(\mathrm{STD}_{\mathrm{LDV}})+(\mathrm{PROD}_{\mathrm{LDDT}^1})(\mathrm{STD}_{\mathrm{LDDT}^1})}{(\mathrm{PROD}_{\mathrm{LDV}})+(\mathrm{PROD}_{\mathrm{LDDT}^1})}=\text{Manufacturer composite particulate standard}$$

Where:

$\mathrm{PROD}_{\mathrm{LDV}}$ represents the manufacturer's total light-duty vehicle production for those engine families being included in the average for a given model year.

$\mathrm{STD}_{\mathrm{LDV}}$ represents the light-duty vehicle particulate standard.

$\mathrm{PROD}_{\mathrm{LDDT1}}$ represents the manufacturer's total diesel light-duty truck production for those engine families with a loaded vehicle weight equal to or less than 3,750 lbs which are being included in the average for a given model year.

$\mathrm{STD}_{\mathrm{LDDT1}}$ represents the light-duty truck particulate standard for diesel light-duty trucks with a loaded vehicle weight equal to or less than 3,750 lbs.

Production-weighted average means the manufacturer's production-weighted average particulate emission level, for certification purposes, of all of its diesel engine families included in the particulate averaging program. It is calculated at the end of the model year by multiplying each family particulate emission limit by its respective production, summing these terms, and dividing the sum by the total production of the affected families. Those vehicles produced for sale in California or at high altitude shall each be averaged separately from those produced for sale in any other area. Diesel light-duty trucks with a loaded vehicle weight equal to or greater than 3,751 lbs (LDDT2s) shall only be averaged with other diesel light-duty trucks with a loaded vehicle weight equal to or greater than 3,751 lbs produced by that manufacturer.

[53 FR 43875, Oct. 31, 1988]

§86.087–38 Maintenance instructions.

(a) The manufacturer shall furnish or cause to be furnished to the purchaser of each new motor vehicle (or motor vehicle engine) subject to the standards prescribed in §86.087–8, §86.087–9, §86.087–10, or §86.087–11, as applicable, written instructions for the proper

maintenance and use of the vehicle (or engine), by the purchaser consistent with the provisions of § 86.087–25, which establishes what scheduled maintenance the Administrator approves as being reasonable and necessary. For light-duty vehicle manufacturers optionally complying with § 86.087–25(a) for the 1987 model year, the Administrator approves any scheduled maintenance allowed by § 86.087–25(a) as being reasonable and necessary.

(1) The maintenance instructions required by this section shall be in clear, and to the extent practicable, nontechnical language.

(2) The maintenance instructions required by this section shall contain a general description of the documentation which the manufacturer will require from the ultimate purchaser or any subsequent purchaser as evidence of compliance with the instructions.

(b) Instructions provided to purchasers under paragraph (a) of this section shall specify the performance of all scheduled maintenance performed by the manufacturer on certification durability vehicles and, in cases where the manufacturer performs less maintenance on certification durability vehicles than the allowed limit, may specify the performance of any scheduled maintenance allowed under § 86.087–25 (or under § 86.085–25(a), for light-duty vehicle families optionally complying with that section for the 1987 model year).

(c) Scheduled emission-related maintenance in addition to that performed under § 86.087–25(b) may only be recommended to offset the effects of abnormal in-use operating conditions, except as provided in paragraph (d) of this section. The manufacturer shall be required to demonstrate, subject to the approval of the Administrator, that such maintenance is reasonable and technologically necessary to assure the proper functioning of the emission control system. Such additional recommended maintenance shall be clearly differentiated, in a form approved by the Administrator, from that approved under § 86.087–25(b).

(d) Inspections of emission-related parts or systems with instructions to replace, repair, clean, or adjust the parts or systems if necessary, are not considered to be items of scheduled maintenance which insure the proper functioning of the emission control system. Such inspections, and any recommended maintenance beyond that approved by the Administrator as reasonable and necessary under paragraphs (a), (b), and (c) of this section, may be included in the written instructions furnished to vehicle owners under paragraph (a) of this section: *Provided*, That such instructions clearly state, in a form approved by the Administrator, that the owner need not perform such inspections or recommended maintenance in order to maintain the emission warranty or manufacturer recall liability.

(e) If the vehicle has been granted an alternative useful life period under the provisions of § 86.087–21(f), the manufacturer may choose to include in such instructions an explanation of the distinction between the alternative useful life specified on the label, and the emissions defect and emissions performance warranty period. The explanation must clearly state that the useful life period specified on the label represents the average period of use up to retirement or rebuild for the engine family represented by the engine used in the vehicle. An explanation of how the actual useful lives of engines used in various applications are expected to differ from the average useful life may be included. The explanation(s) shall be in clear, non-technical language that is understandable to the ultimate purchaser.

(f) If approved by the Administrator, the instructions provided to purchasers under paragraph (a) of this section shall indicate what adjustments or modifications, if any, are necessary to allow the vehicle to meet applicable emission standards at elevations above 4,000 feet, or at elevations of 4,000 feet or less.

(Secs. 202, 203, 206, 207, 208, 301a, Clean Air Act, as amended; 42 U.S.C. 7521, 7522, 7525, 7541, 7542, 7601a)

[50 FR 10693, Mar. 15, 1985, as amended at 51 FR 24610, July 7, 1986]

§ 86.088–2 Definitions.

The definitions in § 86.085–2 remain effective. The definitions in this section

apply beginning with the 1988 model year.

Composite NO_X standard, for a manufacturer which elects to average light-duty trucks subject to the NO_X standard of § 86.088–9(a)(iii)(A) together with those subject to the NO_X standard of § 86.088–9(a)(iii)(B) in the light-duty truck NO_X averaging program, means that standard calculated according to the following equation and rounded to the nearest one-tenth gram per mile:

$$\frac{\left[(PROD_A)(STD_A)+(PROD_B)(STD_B)\right]}{\left[(PROD_A)+(PROD_B)\right]} = \text{Manufacturer's Composite } NO_x \text{ Standard,}$$

Where:

$PROD_A$ = The manufacturer's total light-duty truck production for those engine families subject to the standard of § 86.088–9(a)(iii)(A) and included in the average for a given model year,

STD_A = The NO_X standard of § 86.088–9(a)(iii)(A),

$PROD_B$ = The manufacturer's total light-duty truck production for those engine families subject to the standard of § 86.088–9(a)(iii)(B) and included in the average for a given model year, and

STD_B = The NO_X standard of § 86.088–9(a)(iii)(B).

Critical emission-related components are those components which are designed primarily for emission control, or whose failure may result in a significant increase in emissions accompanied by no significant impairment (or perhaps even an improvement) in performance, driveability, and/or fuel economy as determined by the Administrator.

Critical emission-related maintenance means that maintenance to be performed on critical emission-related components.

Emission-related maintenance means that maintenance which does substantially affect emissions or which is likely to affect the emissions deterioration of the vehicle or engine during normal in-use operation, even if the maintenance is performed at some time other than that which is recommended.

Family NO_X emission limit means the NO_X emission level to which an engine family is certified in the light-duty truck NO_X averaging program, expressed to one-tenth of a gram per mile accuracy.

Non-emission-related maintenance means that maintenance which does not substantially affect emissions and which does not have a lasting effect on the emissions deterioration of the vehicle or engine during normal in-use operation once the maintenance is performed.

Production-weighted NO_X average means the manufacturer's production-weighted average NO_X emission level, for certification purposes, of all of its light-duty truck engine families included in the NO_X averaging program. It is calculated at the end of the model year by multiplying each family NO_X emission limit by its respective production, summing those terms, and dividing the sum by the total production of the effected families. Those vehicles produced for sale in California or at high altitude shall each be averaged separately from those produced for sale in any other area.

Production-weighted particulate average means the manufacturer's production-weighted average particulate emission level, for certification purposes, of all of its diesel engine families included in the particulate averaging program. It is calculated at the end of the model year by multiplying each family particulate emission limit by its respective production, summing those terms, and dividing the sum by the total production of the effected families. Those vehicles produced for sale in California or at high altitude shall each be averaged separately from those produced for sale in any other area.

(Secs. 202, 203, 206, 207, 208, 301a, Clean Air Act, as amended; 42 U.S.C. 7521, 7522, 7525, 7541, 7542, 7601a)

[50 FR 10648, Mar. 15, 1985]

§ 86.088–10 Emission standards for 1988 and 1989 model year gasoline-fueled heavy-duty engines and vehicles.

(a)(1) Exhaust emissions from new 1988 and later model year gasoline-fueled heavy-duty engines shall not exceed:

(i) For engines intended for use in all vehicles except as provided in paragraph (a)(3) of this paragraph,

(A) *Hydrocarbons.* 1.1 grams per brake horsepower-hour, as measured under transient operating conditions.

(B) *Carbon monoxide.* (*1*) 14.4 grams per brake horsepower-hour, as measured under transient operating conditions.

(*2*) *Gasoline-fueled heavy-duty engines utilizing aftertreatment technology.* 0.50 percent of exhause gas flow at curb idle.

(C) *Oxides of nitrogen.* 10.6 grams per brake horsepower-hour, as measured under transient operating conditions.

(ii) For engines intended for use only in vehicles with a Gross Vehicle Weight Rating of greater than 14,000 pounds,

(A) *Hydrocarbons.* 1.9 grams per brake horsepower-hour, as measured under transient operating conditions.

(B) *Carbon monoxide.* (*1*) 37.1 grams per brake horsepower-hour as measured under transient operating conditions.

(*2*) *Gasoline-fueled heavy-duty engines utilizing aftertreatment technology.* 0.50 percent of exhaust gas flow at curb idle.

(C) *Oxides of nitrogen.* 10.6 grams per brake horsepower-hour, as measured under transient operating conditions.

(2) The standards set forth in paragraph (a)(1) of this section refer to the exhaust emitted over the operating schedule set forth in paragraph (f)(1) of appendix I to this part, and measured and calculated in accordance with the procedures set forth in subparts N or P.

(3)(i) A manufacturer may certify one or more gasoline-fueled heavy-duty engine configurations intended for use in all vehicles to the emission standards set forth in paragraph (a)(1)(ii) of this paragraph: *Provided,* That the total model year sales of such configuration(s) being certified to the emission standards in paragraph (a)(1)(ii) of this section represent no more than 5 percent of total model year sales of all gasoline-fueled heavy-duty engines intended for use in vehicles with a Gross Vehicle Weight Rating of up to 14,000 pounds by the manufacturer.

(ii) The configurations certified to the emission standards of paragraph (a)(1)(ii) of this section under the provisions of paragraph (a)(3)(i) of this section shall still be required to meet the evaporative emission standards set forth in paragraphs (b)(1)(i)(A) and (b)(2)(i) of this section.

(b)(1) Evaporative emissions from 1988 and later model year gasoline-fueled heavy-duty vehicles shall not exceed:

(i) *Hydrocarbons.* (A) For vehicles with a Gross Vehicle Weight Rating of up to 14,000 pounds, 3.0 grams per test.

(B) For vehicles with a Gross Vehicle Weight Rating of greater than 14,000 pounds, 4.0 grams per test.

(2)(i) For vehicles with a Gross Vehicle Weight Rating of up to 26,000 pounds, the standards set forth in paragraph (b)(1) of this section refer to a composite sample of fuel evaporative emissions collected under the conditions set forth in subpart M and measured in accordance with those procedures.

(ii) For vehicles with a Gross Vehicle Weight Rating of greater than 26,000 pounds, the standard set forth in paragraph (b)(1)(i)(B) of this section refers to the manufacturer's engineering design evaluation using good engineering practice (a statement of which is required in § 86.088–23(b)(4)(ii)).

(c) No crankcase emissions shall be discharged into the ambient atmosphere from any new 1988 or later model year gasoline-fueled heavy-duty engine.

(d) Every manufacturer of new motor vehicle engines subject to the standards prescribed in this section shall, prior to taking any of the actions specified in section 203(a)(1) of the Act, test or cause to be tested motor vehicle engines in accordance with applicable procedures in subpart N or P of this part to ascertain that such test engines

meet the requirements of paragraphs (a) and (c) of this section.

(Secs. 202, 203, 206, 207, 208, 301a, Clean Air Act, as amended; 42 U.S.C. 7521, 7522, 7525, 7541, 7542, 7601a)

[50 FR 10651, Mar. 15, 1985, as amended at 52 FR 47864, Dec. 16, 1987]

§ 86.090–1 General applicability.

(a) The provisions of this subpart apply to: 1990 and later model year new Otto-cycle and diesel light-duty vehicles; 1990 and later model year new Otto-cycle and diesel light-duty trucks; and, 1990 and later model year new Otto-cycle and diesel heavy-duty engines.

(b) *Optional applicability.* A manufacturer may request to certify any heavy-duty vehicle of 10,000 pounds Gross Vehicle Weight Rating or less to the light-duty truck provisions. Heavy-duty engine or vehicle provisions do not apply to such a vehicle.

(c) [Reserved]

(d) *Alternative Durability Program.* For 1990 and later model year light-duty vehicles and light-duty trucks, a manufacturer may elect to participate in the Alternative Durability Program. This optional program provides an alternative method of determining exhaust emission control system durability. The general procedures and a description of the programs are contained in § 86.085–13 and specific provisions on test vehicles and compliance procedures are contained in § 86.085–24 and § 86.088–28 respectively.

(e) *Small-Volume Manufacturers.* Special certification procedures are available for any manufacturer whose projected combined U.S. sales of light-duty vehicles, light-duty trucks, and heavy-duty engines in its product line are fewer than 10,000 units for the model year in which the manufacturer seeks certification. In order to certify its product line under these optional procedures, the small-volume manufacturer must first obtain the Administrator's approval. Vehicles produced at facilities leased, operated, controlled, supervised, or is ten percent or greater part owned by the manufacturer shall be counted in calculating the total sales of the manufacturer. The small-volume manufacturer's certification procedures are described in § 86.090–14.

(f) *Optional Procedures for Determining Exhaust Opacity.* (1) The provisions of subpart I apply to tests which are performed by the Administrator, and optionally, by the manufacturer.

(2) Measurement procedures, other than that described in subpart I, may be used by the manufacturer provided the manufacturer satisfies the requirements of § 86.090–23(f).

(3) When a manufacturer chooses to use an alternative measurement procedure it has the responsibility to determine whether the results obtained by the procedure will correlate with the results which would be obtained from the measurement procedure in subpart I. Consequently, the Administrator will not routinely approve or disapprove any alternative opacity measurement procedure or any associated correlation data which the manufacturer elects to use to satisfy the data requirements of subpart I.

(4) If a confirmatory test(s) is performed and the results indicate there is a systematic problem suggesting that the data generated under an optional alternative measurement procedure do not adequately correlate with subpart I data, EPA may require that all certificates of conformity not already issued be based on data from subpart I procedures.

[54 FR 14459, Apr. 11, 1989]

§ 86.090–2 Definitions.

The definitions in § 86.088–2 remain effective. The definitions in this section apply beginning with the 1990 model year.

Averaging for heavy-duty engines means the exchange of NO_X and particulate emission credits among engine families within a given manufacturer's product line.

Averaging set means a subcategory of heavy-duty engines within which engine families can average and trade emission credits with one other.

Banking means the retention of heavy-duty engine NO_X and particulate emission credits, by the manufacturer generating the emission credits, for use in future model year certification programs as permitted by regulation.

Composite particulate standard, for a manufacturer which elects to average light-duty vehicles and light-duty trucks together in either the petroleum-fueled or methanol-fueled light-duty particulate averaging program, means that standards calculated using the following equation and rounded to the nearest one-hundredth (0.01) of a gram per mile:

$$(\mathrm{PROD_{LDV}})\frac{(\mathrm{STD_{LDV}})+(\mathrm{PROD_{LDT}})}{(\mathrm{PROD_{LDV}})+(\mathrm{PROD_{LDT}})}(\mathrm{STD_{LDT}}) = \text{Manufacturer composite particulate standard}$$

Where:

$\mathrm{PROD_{LDV}}$ represents the manufacturer's total petroleum-fueled diesel or methanol-fueled diesel light-duty vehicle production for those engine families being included in the appropriate average for a given model year.

$\mathrm{STD_{LDV}}$ represents the light-duty vehicle particulate standard.

$\mathrm{PROD_{LDT}}$ represents the manufacturer's total petroleum-fueled diesel or methanol-fueled diesel light-duty truck production for those engine families being included in the appropriate average for a given model year.

$\mathrm{STD_{LDT}}$ represents the light-duty truck particulate standard.

Dedicated vehicle (or engine) means any motor vehicle (or motor vehicle engine) engineered and designed to be operated using a single fuel. Flexible fuel vehicles and multi-fuel vehicles are not dedicated vehicles.

Diesel means type of engine with operating characteristics significantly similar to the theoretical Diesel combustion cycle. The non-use of a throttle during normal operation is indicative of a diesel engine.

Dual fuel vehicle (or engine) means any motor vehicle (or motor vehicle engine) engineered and designed to be operated on two different fuels, but not on a mixture of fuels.

Emission credits mean the amount of emission reductions or exceedances, by a heavy-duty engine family, below or above the emission standard, respectively. Emission credits below the standard are considered as ''positive credits,'' while emission credits above the standard are considered as ''negative credits.'' In addition, ''projected credits'' refer to emission credits based on the projected U.S. production volume of the engine family. ''Reserved credits'' are emission credits generated within a model year waiting to be reported to EPA at the end of the model year. ''Actual credits'' refer to emission credits based on actual U.S. production volumes as contained in the end-of-year reports submitted to EPA. Some or all of these credits may be revoked if EPA review of the end of year reports or any subsequent audit actions uncover problems or errors.

Family emission limit (FEL) means an emission level declared by the manufacturer which serves in lieu of an emission standard for certification purposes in any of the averaging, trading, or banking programs. FELs must be expressed to the same number of decimal places as the applicable emission standard. The FEL for an engine family using NO_X or particulate NCPs must equal the value of the current NO_X or particulate emission standard.

Flexible fuel vehicle (or engine) means any motor vehicle (or motor vehicle engine) engineered and designed to be operated on any mixture of two or more different fuels.

Methanol-fueled means any motor vehicle or motor vehicle engine that is engineered and designed to be operated using methanol fuel (*i.e.,* a fuel that contains at least 50 percent methanol (CH_3OH) by volume) as fuel. Flexible fuel vehicles are methanol-fueled vehicles.

Non-oxygenated hydrocarbon means organic emissions measured by a flame ionization detector, excluding methanol.

Otto-cycle means type of engine with operating characteristics significantly similar to the theoretical Otto combustion cycle. The use of a throttle during normal operation is indicative of an Otto-cycle engine.

Primary intended service class means:

(a) The primary service application group for which a heavy-duty diesel engine is designed and marketed, as determined by the manufacturer. The primary intended service classes are designated as light, medium, and heavy heavy-duty diesel engines. The determination is based on factors such as vehicle GVW, vehicle usage and operating patterns, other vehicle design characteristics, engine horsepower, and other engine design and operating characteristics.

(1) Light heavy-duty diesel engines usually are non-sleeved and not designed for rebuild; their rated horsepower generally ranges from 70 to 170. Vehicle body types in this group might include any heavy-duty vehicle built for a light-duty truck chassis, van trucks, multi-stop vans, recreational vehicles, and some single axle straight trucks. Typical applications would include personal transportation, light-load commercial hauling and delivery, passenger service, agriculture, and construction. The GVWR of these vehicles is normally less than 19,500 lbs.

(2) Medium heavy-duty diesel engines may be sleeved or non-sleeved and may be designed for rebuild. Rated horsepower generally ranges from 170 to 250. Vehicle body types in this group would typically include school buses, tandem axle straight trucks, city tractors, and a variety of special purpose vehicles such as small dump trucks, and trash compactor trucks. Typical applications would include commercial short haul and intra-city delivery and pickup. Engines in this group are normally used in vehicles whose GVWR varies from 19,500–33,000 lbs.

(3) Heavy heavy-duty diesel engines are sleeved and designed for multiple rebuilds. Their rated horsepower generally exceeds 250. Vehicles in this group are normally tractors, trucks, and buses used in inter-city, long-haul applications. These vehicles normally exceed 33,000 lbs. GVWR.

Production weighted particulate average means the manufacturer's production-weighted average particulate emission level, for certification purposes, of all of its diesel engine families included in the light-duty particulate averaging program. It is calculated at the end of the model year by multiplying each family particulate emission limit by its respective production, summing those terms, and dividing the sum by the total production of the effected families. Those vehicles produced for sale in California or at high altitude shall each be averaged separately from those produced for sale in any other area.

Throttle means a device used to control an engine's power output by limiting the amount of air entering the combustion chamber.

Total Hydrocarbon Equivalent means the sum of the carbon mass emissions of non-oxygenated hydrocarbons, methanol, formaldehyde or other organic compounds that are separately measured, expressed as gasoline-fueled vehicle hydrocarbons. In the case of exhaust emissions, the hydrogen-to-carbon ratio of the equivalent hydrocarbon is 1.85:1. In the case of diurnal and hot soak emissions, the hydrogen-to-carbon ratios of the equivalent hydrocarbons are 2.33:1 and 2.2:1, respectively.

Trading means the exchange of heavy-duty engine NO_X or particulate emission credits between manufacturers.

Useful life means:

(a) For light-duty vehicles a period of use of 5 years or 50,000 miles, whichever first occurs.

(b) For a light-duty truck engine family, a period of use of 11 years or 120,000 miles, whichever occurs first.

(c) For an Otto-cycle heavy-duty engine family, a period of use of 8 years of 110,000 miles, whichever first occurs.

(d) For a diesel heavy-duty engine family:

(1) For light heavy-duty diesel engines, period of use of 8 years or 110,000 miles, whichever first occurs.

(2) For medium heavy-duty diesel engines, a period of use of 8 years or 185,000 miles, whichever first occurs.

(3) For heavy heavy-duty diesel engines, a period of use of 8 years or 290,000 miles, whichever first occurs.

(e) As an option for both light-duty truck and heavy-duty engine families, an alternative useful life period assigned by the Administrator under the provisions of paragraph (f) of § 86.090–21.

(f) The useful-life period for purposes of the emissions defect warranty and

emissions performance warranty shall be a period of 5 years/50,000 miles whichever first occurs, for light-duty trucks, Otto cycle heavy-duty engines and light heavy-duty diesel engines. For all other heavy-duty diesel engines the aforementioned period is 5 years/100,000 miles, whichever first occurs. However, in no case may this period be less than the manufacturer's basic mechanical warranty period for the engine family.

[55 FR 30612, July 26, 1990, as amended at 60 FR 34334, June 30, 1995; 62 FR 31233, June 6, 1997]

§ 86.090–3 Abbreviations.

(a) The abbreviations in § 86.078–3 remain effective. The abbreviations in this section apply beginning with the 1990 model year.

(b) The abbreviations in this section apply to this subpart, and also to subparts B, E, F, M, N, and P of this part, and have the following meanings:

DNPH—2,4-dinitrophenylhydrazine.
FEL—Family emission limit.
GC—Gas chromatograph.
HPLC—High-pressure liquid chromatography.
MeOH—Methanol (CH_3OH).
Mg—Megagram(s) (1 million grams)
MJ—Megajoule(s) (1 million joules)
THCE—Total Hydrocarbon Equivalent
UV—Ultraviolet.

[55 FR 30613, July 26, 1990, as amended at 60 FR 34335, June 30, 1995]

§ 86.090–5 General standards; increase in emissions; unsafe conditions.

(a)(1) Every new motor vehicle (or new motor vehicle engine) manufactured for sale, sold, offered for sale, introduced, or delivered for introduction to commerce, or imported into the United States for sale or resale which is subject to any of the standards prescribed in this subpart shall be covered by a certificate of conformity issued pursuant to §§ 86.090–21, 86.090–22, 86.090–23, 86.090–29, 86.090–30, 86.079–31, 86.079–32, 86.079–33, and 86.082–34.

(2) No heavy-duty vehicle manufacturer shall take any of the actions specified in section 203(a)(1) of the Act with respect to any Otto-cycle or diesel heavy-duty vehicle which uses an engine which has not been certified as meeting applicable standards.

(3) Notwithstanding paragraphs (a)(1) and (2) of this section, a light or heavy duty motor vehicle equipped with an engine certified to the nonroad provision of 40 CFR part 89 may be sold, offered for sale or otherwise introduced into commerce by a motor vehicle manufacturer to a secondary manufacturer if the motor vehicle manufacturer obtains written assurance from the secondary manufacturer that such vehicle will be converted to a nonroad vehicle or to a piece of nonroad equipment, as defined in 40 CFR part 89, before title is transferred to an ultimate purchaser. Failure of the secondary manufacturer to convert such vehicles to nonroad vehicles or equipment prior to transfer to an ultimate purchaser shall be considered a violation of section 203(a) (1) and (3) of the Clean Air Act.

(b)(1) Any system installed on or incorporated in a new motor vehicle (or new motor vehicle engine) to enable such vehicle (or engine) to conform to standards imposed by this subpart.

(i) Shall not in its operation or function cause the emission into the ambient air of any noxious or toxic substance that would not be emitted in the operation of such vehicle (or engine) without such system, except as specifically permitted by regulation; and

(ii) Shall not in its operation, function or malfunction result in any unsafe condition endangering the motor vehicle, its occupants, or persons or property in close proximity to the vehicle.

(2) In establishing the physically adjustable range of each adjustable parameter on a new motor vehicle (or new motor vehicle engine), the manufacturer shall ensure that, taking into consideration the production tolerances, safe vehicle driveability characteristics are available within that range, as required by section 202(a)(4) of the Clean Air Act.

(3) Every manufacturer of new motor vehicles (or new motor vehicle engines) subject to any of the standards imposed by this subpart shall, prior to taking any of the actions specified in section 203(a)(1) of the Act, test or cause to be tested motor vehicles (or motor vehicle engines) in accordance

with good engineering practice to ascertain that such test vehicles (or test engines) will meet the requirements of this section for the useful life of the vehicle (or engine).

[54 FR 14460, Apr. 11, 1989, as amended at 61 FR 58106, Nov. 12, 1996]

§ 86.090–8 Emission standards for 1990 and later model year light-duty vehicles.

(a)(1) Exhaust emissions from 1990 and later model year light-duty vehicles shall not exceed (compliance with these standards is optional for 1990 model year methanol-fueled vehicles):

(i)(A) *Hydrocarbons (for petroleum-fueled Otto-cycle and diesel vehicles).* 0.41 gram per vehicle mile (0.26 gram per vehicle kilometer).

(B) *Total Hydrocarbon Equivalent (for methanol-fueled Otto-cycle and diesel vehicles).* 0.41 gram per vehicle mile (0.26 gram per vehicle kilometer).

(ii) *Carbon monoxide.* 3.4 grams per vehicle mile (2.1 grams per vehicle kilometer).

(iii) *Oxides of nitrogen.* 1.0 gram per vehicle mile (0.63 gram per vehicle kilometer).

(iv) *Particulate (for diesel vehicles only).*

(A) 0.20 gram per vehicle mile (0.12 gram per vehicle kilometer).

(B) A manufacturer may elect to include all or some of its diesel light-duty vehicle engine families in the appropriate particulate averaging program (petroleum or methanol), provided that vehicles produced for sale in California or in designated high-altitude areas may be averaged only within each of these areas. Averaging is not permitted between fuel types. If the manufacturer elects to average light-duty vehicles and light-duty trucks together in the appropriate particulate averaging program, its composite particulate standard applies to the combined set of light-duty vehicles and light-duty trucks included in the average and is calculated as defined in § 86.090–2.

(2) The standards set forth in paragraph (a)(1) of this section refer to the exhaust emitted over a driving schedule as set forth in subpart B of this part and measured and calculated in accordance with those procedures.

(b) Fuel evaporative emissions from 1990 and later model year light-duty vehicles shall not exceed (compliance with these standards is optional for 1990 model year methanol-fueled engines):

(1) *Hydrocarbons (for gasoline-fueled vehicles).* 2.0 grams per test.

(2) *Total Hydrocarbon Equivalent (for methanol-fueled vehicles).* 2.0 grams carbon per test.

(3) The standards set forth in paragraphs (b) (1) and (2) of this section refers to a composite sample of the fuel evaporative emissions collected under the conditions set forth in subpart B of this part and measured in accordance with those procedures.

(c) No crankcase emissions shall be discharged into the ambient atmosphere from any 1990 and later model year Otto-cycle or methanol-fueled diesel light-duty vehicle.

(d)–(f) [Reserved]

(g) Any 1990 and later model year light-duty vehicle that a manufacturer wishes to certify for sale shall meet the emission standards under both low- and high-altitude conditions as specified in § 86.082–2, except as provided in paragraphs (h) and (i) of this section. Vehicles shall meet emission standards under both low- and high-altitude conditions without manual adjustments or modifications. Any emission control device used to meet emission standards under high-altitude conditions shall initially actuate (automatically) no higher than 4,000 feet above sea level.

(h) The manufacturer may exempt 1990 and later model year vehicles from compliance at high altitude with the emission standards set forth in paragraphs (a) and (b) of this section if the vehicles are not intended for sale at high altitude and if the requirements of paragraphs (h) (1) and (2) of this section are met.

(1) A vehicle configuration shall only be considered eligible for exemption under paragraph (h) of this section if the requirements of either paragraph (h) (l) (i), (ii), (iii), or (iv) of this section are met.

(i) Its design parameters (displacement-to-weight ratio (D/W) and engine speed-to-vehicle-speed ratio (N/V)) fall within the exempted range for that

manufacturer for that year. The exempted range is determined according to the following procedure:

(A) The manufacturer shall graphically display the D/W and N/V data of all vehicle configurations it will offer for the model year in question. The axis of the abscissa shall be D/W (where (D) is the engine displacement expressed in cubic centimeters and (W) is the equivalent vehicle test weight expressed in pounds), and the axis of the ordinate shall be N/V (where (N) is the crankshaft speed expressed in revolutions per minute and (V) is the vehicle speed expressed in miles per hour). At the manufacturer's option, either the 1:1 transmission gear ratio or the lowest numerical gear ratio available in the transmission will be used to determine N/V. The gear selection must be the same for all N/V data points on the manufacturer's graph. For each transmission/axle ratio combination, only the lowest N/V value shall be used in the graphical display.

(B) The product line is then defined by the equation, $N/V=C(D/W)^{-0.9}$, where the constant, C, is determined by the requirement that all the vehicle data points either fall on the line or lie to the upper right of the line as displayed on the graphs.

(C) The exemption line is then defined by the equation, $N/V=C(0.84\ D/W)^{-0.9}$, where the constant, C is the same as that found in paragraph (h)(1)(i)(B) of this section.

(D) The exempted range includes all values of N/V and D/W which simultaneously fall to the lower left of the exemption line as drawn on the graph.

(ii) Its design parameters fall within the alternate exempted range for that manufacturer that year. The alternate exempted range is determined by substituting rated horsepower (hp) for displacement (D) in the exemption procedure described in paragraph (h)(1)(i) of this section and by using the product line $N/V=C(hp/W)^{-0.9}$.

(A) Rated horsepower shall be determined by using the Society of Automotive Engineers Test Procedure J 1349, or any subsequent version of that test procedure. Any of the horsepower determinants within that test procedure may be used, as long as it is used consistently throughout the manufacturer's product line in any model year.

(B) No exemptions will be allowed under paragraph (h)(1)(ii) of this section to any manufacturer that has exempted vehicle configurations as set forth in paragraph (h)(1)(i) of this section.

(iii) Its acceleration time (the time it takes a vehicle to accelerate from 0 miles per hour to a speed not less than 40 miles per hour and not greater than 50 miles per hour) under high-altitude conditions is greater than the largest acceleration time under low-altitude conditions for that manufacturer for that year. The procedure to be followed in making this determination is:

(A) The manufacturer shall list the vehicle configuration and acceleration time under low-altitude conditions of that vehicle configuration which has the highest acceleration time under low-altitude conditions of all the vehicle configurations it will offer for the model year in question. The manufacturer shall also submit a description of the methodology used to make this determination.

(B) The manufacturer shall then list the vehicle configurations and acceleration times under high-altitude conditions of all those vehicle configurations which have higher acceleration times under high-altitude conditions than the highest acceleration time at low altitude identified in paragraph (h)(1)(iii)(A) of this section.

(iv) In lieu of performing the test procedure of paragraphs (h)(1)(iii) (A) and (B) of this section, its acceleration time can be estimated based on the manufacturer's engineering evaluation, in accordance with good engineering practice, to meet the exemption criteria of paragraph (h)(1)(iii) of this section.

(2) A vehicle shall only be considered eligible for exemption under this paragraph if at least one configuration of its model type (and transmission configuration in the case of vehicles equipped with manual transmissions, excluding differences due to the presence of overdrive) is certified to meet emission standards under high-altitude conditions as specified in paragraph (a) through (g) of this section. The Certificate of Conformity (the Certificate)

covering any exempted configuration(s) will also apply to the corresponding non-exempt configuration(s) required under this subparagraph. As a condition to the exemption, any suspension, revocation, voiding, or withdrawal of the Certificate as it applies to a non-exempt configuration for any reason will result in a suspension of the Certificate as it applies to the corresponding exempted configuration(s) of that model type, unless there is at least one other corresponding non-exempt configuration of the same model type still covered by the Certificate. The suspension of the Certificate as it applies to the exempted configuration(s) will be terminated when any one of the following occurs:

(i) Another corresponding non-exempt configuration(s) receive(s) coverage under the Certificate; or

(ii) Suspension of the Certificate as it applies to the corresponding non-exempt configuration(s) is terminated; or

(iii) The Agency's action(s), with respect to suspension, revocation, voiding or withdrawal of the Certificate as it applies to the corresponding non-exempt configuration(s), is reversed.

(3) The sale of a vehicle for principal use at a designated high-altitude location that has been exempted as set forth in paragraph (h) of this section will be considered a violation of Section 203(a)(1) of the Clean Air Act.

(i)(1) The manufacturers may exempt 1990 and later model year vehicles from compliance at low altitude with the emission standards set forth in paragraphs (a) and (b) of this section if the vehicles:

(i) Are not intended for sale at low altitude; and

(ii) Are equipped with a unique, high-altitude axle ratio (rear-wheel drive vehicles) or a unique, high-altitude drivetrain (front-wheel drive vehicles) with a higher N/V ratio than other configurations of that model type which are certified in compliance with the emission standards of paragraphs (a) and (b) of this section under low-altitude conditions.

(2) The sale of a vehicle for principal use at low altitude that has been exempted as set forth in paragraph (h)(1) of this section will be considered a violation of section 203(a)(1) of the Clean Air Act.

[54 FR 14461, Apr. 11, 1989]

§ 86.090–9 Emission standards for 1990 and later model year light-duty trucks.

(a)(1) The standards set forth in paragraphs (a) through (c) of this section shall apply to light-duty trucks sold for principal use at other than a designated high-altitude location. Exhaust emissions from 1990 and later model year light-duty trucks shall not exceed (compliance with these standards is optional for 1990 model year methanol-fueled vehicles):

(i)(A) *Hydrocarbons (for petroleum-fueled Otto-cycle and diesel light-duty trucks).* 0.80 gram per vehicle mile (0.50 gram per vehicle kilometer).

(B) *Total Hydrocarbon Equivalent (for methanol-fueled Otto-cycle and diesel light-duty trucks).* 0.80 gram per vehicle mile (0.50 gram per vehicle kilometer).

(ii) *Carbon monoxide.* (A) 10 grams per vehicle mile (6.2 grams per vehicle kilometer).

(B) 0.50 percent of exhaust gas flow at curb idle (for Otto-cycle and methanol-fueled diesel light-duty trucks only).

(iii) *Oxides of nitrogen.* (A) For light-duty trucks up to and including 3,750 lbs loaded vehicle weight, 1.2 grams per vehicle mile (0.75 gram per vehicle kilometer).

(B) For light-duty trucks greater loaded vehicle weight, 1.7 grams per vehicle mile (1.1 grams per vehicle kilometer).

(C) A manufacturer may elect to include all or some of its light-duty truck engine families in the NO_X averaging program, provided that trucks produced for sale in California or in designated high-altitude areas may be averaged only within each of those areas. Petroleum-fueled and methanol-fueled engine families may not be averaged together. Otto-cycle and diesel engines families also may not be averaged together. If the manufacturer elects to participate in the NO_X averaging program, individual family NO_X emission limits may not exceed 2.3 grams per mile. If the manufacturer elects to average together NO_X emissions of light-duty trucks subject to the standards of paragraphs

(a)(1)(iii)(A) and (a)(1)(iii)(B) of this section, its composite NO_X standard applies to the combined fleets of light-duty trucks up to and including, and over, 3,750 lbs loaded vehicle weight included in the average and is calculated as defined in § 86.088–2.

(iv) *Particulate (for diesel light-duty trucks only).* (A) For light-duty trucks up to and including 3,750 lbs. loaded vehicle weight, 0.26 gram per vehicle mile (0.16 gram per vehicle kilometer).

(B) For light-duty trucks 3,751 lbs and greater loaded vehicle weight, 0.45 gram per vehicle mile (0.28 gram per vehicle kilometer).

(C) A manufacturer may elect to include all or some of its diesel light-duty truck engine families subject to the standard of paragraph (a)(1)(w)(A) of this section in the appropriate particulate averaging program (petroleum or methanol), provided that trucks produced for sale in California or in designated high-altitude areas may be averaged only within each of those areas. Averaging is not permitted between fuel types. If the manufacturer elects to average both light-duty trucks subject to the standard of paragraph (a)(1)(w)(A) of this section and light-duty vehicles together in the appropriate particulate averaging program, its composite particulate standard applies to the combined set of light-duty vehicles and light-duty trucks included in the average and is calculated as defined in § 86.088–2.

(2) The standards set forth in paragraphs (a)(1)(i), (a)(1)(ii)(A), (a)(1)(iii), and (a)(1)(iv) of this section refer to the exhaust emitted over a driving schedule as set forth in subpart B of this part and measured and calculated in accordance with those procedures. The standard set forth in paragraph (a)(1)(ii)(B) of this section refers to the exhaust emitted at curb idle and measured and calculated in accordance with the procedures set forth in subpart P of this part.

(b) Fuel evaporative emissions from 1990 and later model year light-duty trucks shall not exceed (compliance with these standards is optional for 1990 model year methanol-fueled vehicles):

(1) *Hydrocarbons (for gasoline-fueled light-duty trucks).* 2.0 grams per test.

(2) *Total Hydrocarbon Equivalent (for methanol-fueled light-duty trucks).* 2.0 grams per test.

(3) The standards set forth in paragraphs (b) (1) and (2) of this section refer to a composite sample of the fuel evaporative emissions collected under the conditions set forth in subpart B of this part and measured in accordance with those procedures.

(c) No crankcase emissions shall be discharged into the ambient atmosphere from any 1990 and later model year light-duty truck.

(d)(1) Model year 1990 and later light-duty trucks sold for principal use at a designated high-altitude location shall be capable of meeting the following exhaust emission standards when tested under high-altitude conditions:

(i)(A) *Hydrocarbons (for petroleum-fueled Otto-cycle and diesel light-duty trucks).* 1.0 grams per vehicle mile (0.62 grams per vehicle kilometer).

(B) *Total Hydrocarbon Equivalent (for methanol-fueled Otto-cycle and diesel light-duty trucks).* 1.0 gram per vehicle mile (0.62 gram per vehicle kilometer).

(ii) *Carbon Monoxide.* (A) 14 grams per vehicle mile (8.7 grams per vehicle kilometer).

(B) 0.50 percent of exhaust gas flow at curb idle (for Otto-cycle and methanol-fueled diesel light-duty trucks only).

(iii) *Oxides of Nitrogen.* (A) For light-duty trucks up to and including 3,750 lbs loaded vehicle weight, 1.2 grams per vehicle mile (0.75 grams per vehicle kilometer).

(B) For light-duty trucks 3,751 lbs and greater loaded vehicle weight, 1.7 grams per vehicle mile (1.1 grams per vehicle kilometer).

(iv) *Particulate (for diesel light-duty trucks only).* For light-duty trucks up to and including 3,750 lbs loaded vehicle weight, 0.26 gram per vehicle mile (0.16 gram per vehicle kilometer).

(2) The standards set forth in paragraph (d)(1)(i), (d)(1)(ii)(A), (d)(1)(iii), and (d)(1)(iv) of this section refer to the exhaust emitted over a driving schedule as set forth in subpart B of this part and measured and calculated in accordance with those procedures. The standard set forth in paragraph (d)(1)(ii)(B) of this section refers to the exhaust emitted at curb idle and measured and calculated in accordance with

the procedures set forth in subpart P of this part.

(e) Fuel evaporative emissions from 1990 and later model year light-duty trucks sold for principal use at a designated high-altitude location, when tested under high-altitude conditions, shall not exceed:

(1) *Hydrocarbons (for gasoline-fueled light-duty trucks).* 2.6 grams per test.

(2) *Total Hydrocarbon Equivalent (for methanol-fueled light-duty trucks).* 2.6 grams per test.

(3) The standards set forth in paragraphs (e) (1) and (2) of this section refer to a composite sample of the fuel evaporative emissions collected under the conditions set forth in subpart B of this part and measured in accordance with those procedures.

(f) No crankcase emissions shall be discharged into the ambient atmosphere from any 1990 and later model year light-duty trucks sold for principal use at a designated high-altitude location.

(g)(1) Any light-duty truck that a manufacturer wishes to certify for sale at low altitude must be capable of meeting high-altitude emission standards (specified in paragraphs (d) through (f) of this section). The manufacturer may specify vehicle adjustments or modifications to allow the vehicle to meet high-altitude standards but these adjustments or modifications may not alter the vehicle's basic engine, inertia weight class, transmission configuration, and axle ratio.

(i) A manufacturer may certify unique configurations to meet the high-altitude standards but is not required to certify these vehicle configurations to meet the low-altitude standards.

(ii) Any adjustments or modifications that are recommended to be performed on vehicles to satisfy the requirements of paragraph (g)(1) of this section:

(A) Shall be capable of being effectively performed by commercial repair facilities, and

(B) Must be included in the manufacturer's application for certification.

(2) The manufacturer may exempt 1990 and later model year vehicles from compliance with the high-altitude emission standards set forth in paragraphs (d) and (e) of this section if the vehicles are not intended for sale at high altitude and if the following requirements are met. A vehicle configuration shall only be considered eligible for exemption if the requirements of either paragraph (g)(2) (i), (ii), (iii), or (iv) of this section are met.

(i) Its design parameters (displacement-to-weight ratio (D/W) and engine speed to-vehicle-speed ratio (N/V)) fall within the exempted range for that manufacturer for that year. The exempted range is determined according to the following procedure:

(A) The manufacturer shall graphically display the D/W and N/V data of all vehicle configurations it will offer for the model year in question. The axis of the abscissa shall be D/W (where (D) is the engine displacement expressed in cubic centimeters and (W) is the gross vehicle weight (GVW) expressed in pounds), and the axis of the ordinate shall be N/V (where (N) is the crankshaft speed expressed in revolutions per minute and (V) is the vehicle speed expressed in miles per hour). At the manufacturer's option, either the 1:1 transmission gear ratio or the lowest numerical gear ratio available in the transmission will be used to determine N–V. The gear selection must be the same for all N/V data points on the manufacturer's graph. For each transmission/axle ratio combination, only the lowest N/V value shall be used in the graphical display.

(B) The product line is then defined by the equation, $N/V = C(D/W)^{-0.9}$, where the constant, C, is determined by the requirement that all the vehicle data points either fall on the line or lie to the upper right of the line as displayed on the graphs.

(C) The exemption line is then defined by the equation, $N/V = C(0.84\ D/W)^{-0.9}$, where the constant, C is the same as that found in paragraph (g)(2)(i)(B) of this section.

(D) The exempted range includes all values of N/V and D/W which simultaneously fall to the lower left of the exemption line as drawn on the graph.

(ii) Its design parameters fall within the alternate exempted range for that manufacturer that year. The alternate

exempted range is determined by substituting rated horsepower (hp) for displacement (D) in the exemption procedure described in paragraph (g)(2)(i) of this section and by using the product line $N/V = C(hp/W)^{-0.9}$.

(A) Rated horsepower shall be determined by using the Society of Automotive Engineers Test Procedure J 1349, or any subsequent version of that test procedure. Any of the horsepower determinants within that test procedure may be used, as long as it is used consistently throughout the manufacturer s product line in any model year.

(B) No exemptions will be allowed under paragraph (g)(2)(ii) of this section to any manufacturer that has exempted vehicle configurations as set forth in paragraph (g)(2)(i) of this section.

(iii) Its acceleration time (the time it takes a vehicle to accelerate from 0 to a speed not less than 40 miles per hour and not greater than 50 miles per hour) under high-altitude conditions is greater than the largest acceleration time under low-altitude conditions for that manufacturer for that year. The procedure to be followed in making this determination is:

(A) The manufacturer shall list the vehicle configuration and acceleration time under low-altitude conditions of that vehicle configuration which has the highest acceleration time under low-altitude conditions of all the vehicle configurations it will offer for the model year in question. The manufacturer shall also submit a description of the methodology used to make this determination.

(B) The manufacturer shall then list the vehicle configurations and acceleration times under high-altitude conditions of all those vehicle configurations which have higher acceleration times under high-altitude conditions than the highest acceleration time at low altitude identified in paragraph (g)(2)(iii)(A) of this section.

(iv) In lieu of performing the test procedure of paragraph (g)(2)(iii) of this section, its acceleration time can be estimated based on the manufacturer's engineering evaluation, in accordance with good engineering practice, to meet the exemption criteria of paragraph (g)(2)(iii) of this section.

(3) The sale of a vehicle for principal use at a designated high-altitude location that has been exempted as set forth in paragraph (g)(2) of this section will be considered a violation of section 203(a)(1) of the Clean Air Act.

[52 FR 47865, Dec. 16, 1987, as amended at 54 FR 14462, Apr. 11, 1989]

§ 86.090–14 Small-volume manufacturers certification procedures.

(a) The small-volume manufacturers certification procedures described in paragraphs (b) and (c) of this section are optional. Small-volume manufacturers may use these optional procedures to demonstrate compliance with the general standards and specific emission requirements contained in this subpart.

(b)(1) The optional small-volume manufacturers certification procedures apply to light-duty vehicles, light-duty trucks, and heavy-duty engines produced by manufacturers with U.S. sales (for the model year in which certification is sought) of fewer than 10,000 units (light-duty vehicles, light-duty trucks, and heavy-duty engines combined).

(2) For the purpose of determining the applicability of paragraph (b)(1) of this section, where there is more than one importer or distributor of vehicles and/or engines manufactured by the same person, the sales the Administrator shall use shall be the aggregate of the projected or actual sales of those vehicles and/or engines by all of the importers and distributors.

(c) Small-volume manufacturers shall demonstrate compliance with the applicable sections of this subpart as follows:

(1) Sections 86.090–1, 86.088–2, 86.090–3, 86.084–4, 86.090–5, 86.078–6, 86.078–7, and 86.090–8 through 86.090–11 are applicable.

(2) Section 86.080–12 is not applicable.

(3) Sections 86.085–13, 86.090–14, 86.084–15, and 86.085–20 are applicable.

(4) Small-volume manufacturers shall include in its records all of the information that EPA requires in § 86.090–21. This information will be considered part of the manufacturer's application for certification. However, the manufacturer is not required to submit the

information to the Administrator unless the Administrator requests it.

(5) Section 86.085–22 is applicable except as noted below.

(i) Small-volume light-duty vehicle and light-duty truck manufacturers may satisfy the requirements of paragraph (e) of § 86.085–22 by including a statement of compliance on adjustable parameters in the application for certification. In the statement of compliance the manufacturer shall state that the limits, stops, seals, or other means used to inhibit adjustment have been designed to accomplish their intended purpose based on good engineering practice and past experience. If the vehicle parameter is adjustable the vehicle must meet emission standards with the parameter set any place within the adjustable range (reference § 86.090–21).

(ii) Paragraphs (a), (b), (c), and (d) of § 86.085–22 are not applicable.

(6) Section 86.090–23 is applicable.

(7) Section 86.085–24 is applicable except as noted below.

(i) Small-volume manufacturers may satisfy the requirements of paragraphs (b) and (c) of § 86.085–24 by:

(A) Selecting emission-data test vehicles (engines) by the worst case emissions criteria as follows:

(*1*) *Light-duty vehicles and light-duty trucks.* The test vehicle shall be selected based on the following criteria: The manufacturer shall select the heaviest (including options) vehicle within the family. Then within that vehicle it shall select, in the order listed, the largest frontal area, largest displacement, the highest numerical axle ratio with the largest tire offered in the engine family, and the maximum fuel flow calibration.

(*2*) *Heavy-duty Otto-cycle engines.* The manufacturer shall select the worst case emission-data engine first based on the largest displacement within the engine family. Then within the largest displacement the manufacturer shall select, in the order listed, highest fuel flow at the speed of maximum rated torque, the engine with the most advance spark timing, no EGR or lowest EGR flow, and no air pump or lowest actual flow air pump.

(*3*) *Heavy-duty diesel engines.* The manufacturer shall select in each engine family the worst case emission data engine based on the highest fuel feed per stroke, primarily at the speed of maximum rated torque and secondarily at rated speed.

(B) Testing light-duty vehicle or light-duty truck emission-data vehicles at any service accumulation distance less than 6,436 kilometers (4,000 miles) or heavy-duty engine emission-data engines at any service accumulation time less than 125 hours.

(C) Using assigned deterioration factors that the Administrator determines and prescribes. However, the manufacturer may, at its option, accumulate miles (hours) on a durability-data vehicle (engine) and complete emission tests for the purpose of establishing its own deterioration factor.

(ii) Paragraphs (d) and (e) of § 86.085–24 are not applicable.

(8) Section 86.090–25 is applicable to durability-data light-duty vehicles, light-duty trucks, and heavy-duty engines if the manufacturer does not use assigned deterioration factors.

(9) Sections 86.084–26 and 86.085–27 are not applicable.

(10) Sections 86.090–28 and 86.090–29 are applicable.

(11)(i) Section 86.090–30 of this subpart is applicable, except for paragraphs (a)(2) and (b) of that section. In the place of these paragraphs, small-volume manufacturers shall comply with paragraphs (c)(11) (ii) through (v) of this section.

(ii) Small-volume manufacturers shall submit an application for certification containing the following:

(A) The names, addresses, and telephone numbers of the persons the manufacturer authorizes to communicate with us.

(B) A brief description of the vehicles (or engines) covered by the certificate (the manufacturers' sales data book or advertising, including specifications, may satisfy this requirement for most manufacturers). The description shall include, as a minimum, the following items as applicable:

(*1*) Engine families and vehicle (or engine) configurations.

(*2*) Vehicle or engine models to be listed on the certificate of conformity.

(*3*) The test weight and horsepower setting for each vehicle or engine configuration.

(*4*) Projected sales.

(*5*) Combustion cycle.

(*6*) Cooling mechanism.

(*7*) Number of cylinders.

(*8*) Displacement.

(*9*) Fuel system type.

(*10*) Number of catalytic converters, volume, and composition.

(*11*) Method of air aspiration.

(*12*) Thermal reactor characteristics.

(*13*) Suppliers' and/or manufacturer's name and model number of any emission-related items identified in paragraphs (c)(11)(ii)(B) (*1*) through (*12*) of this section, if purchased from a supplier or manufacturer who uses the items in its own certified vehicles(s) or engine(s).

(*14*) A list of emission component part numbers.

(*15*) Drawings, calibration curves, and descriptions of emission related components, including those components regulated under paragraph (e) of § 86.085–22, and schematics of hoses and other devices connecting these components.

(*16*) Vehicle adjustments or modifications necessary for light duty trucks to assure that they conform to high altitude standards.

(*17*) A description of the light-duty vehicles and light-duty trucks that are exempted from either the low- or high-altitude emission standards, as applicable.

(C) The results of all emission tests the manufacturer performs to demonstrate compliance with the applicable standards.

(D)(*1*) The following statement signed by the authorized representative of the manufacturer: ''The vehicles (or engines) described herein have been tested in accordance with [list of the applicable subparts A, B, D, I, N, or P] of part 86, title 40, United States Code of Federal Regulations, and on the basis of those tests are in conformance with that subpart. All of the data and records required by that subpart are on file and are available for inspection by the EPA Administrator. We project the total U.S. sales of vehicles (engines) subject to this subpart to be fewer than 10,000 units.''

(*2*) A statement as required by and contained in paragraph (c)(5) of § 86.090–14 signed by the authorized representative of the manufacturer.

(*3*) A statement that the vehicles or engines described in the manufacturers application for certification are not equipped with auxiliary emission control devices which can be classified as a defeat device as defined in § 86.084–2.

(*4*) A statement of compliance with section 206(a)(3) of the Clean Air Act.

(*5*) A statement that, based on the manufacturer's engineering evaluation and/or emission testing, the light-duty vehicles comply with emission standards at high altitude unless exempt under paragraph (h) of § 86.090–8.

(*6*) A statement that, based on the manufacturers engineering evaluation and/or emission testing, the light-duty trucks sold for principle use at designated high-altitude locations comply with the high-altitude emission requirements and that all other light-duty trucks are at least capable of being modified to meet high altitude standards unless exempt under paragraph (g)(2) of § 86.090–9.

(iii) If the manufacturer meets requirements of this subpart, the Administrator will issue a certificate of conformity for the vehicles described in the application for certification.

(iv) The certificate will be issued for such a period not to exceed one model year as the Administrator may determine and upon such terms as he may deem necessary to assure that any vehicle or engine covered by the certificate will meet the requirements of the Act and of this subpart.

(v)(A) If, after a review of the statements and descriptions submitted by the manufacturer, the Administrator determines that the manufacturer has not met the applicable requirements, the Administrator shall notify the manufacturer in writing, setting forth the basis for his determination. The manufacturer may request a hearing on the Administrator's determination.

(B) If the manufacturer does not request a hearing or present the required information the Administrator will deny certification.

(12) Sections 86.079–31 and 86.079–32 are not applicable

(13) Under § 86.079–33, small-volume manufacturers are covered by the following:

(i) Small-volume manufacturers may make production changes (running

changes) without receiving the Administrator's prior approval. The manufacturer shall assure (by conducting emission tests as it deems necessary) that the affected vehicles (engines) remain in compliance with the requirements of this part.

(ii) The manufacturer shall notify the Administrator within seven days after implementing any production related change (running change) that would affect vehicle emissions. This notification shall include any changes to the information required under paragraph (c)(11)(ii) of this section. The manufacturer shall also amend as necessary its records required under paragraph (c)(4) of this section to conform with the production design change.

(14) Section 86.082–34 is not applicable.

(15) Sections 86.090–35, 86.079–36, 86.082–37, 86.087–38, and 86.084–39 are applicable.

[54 FR 14466, Apr. 11, 1989]

§86.090–21 Application for certification.

(a) A separate application for a certificate of conformity shall be made for each set of standards (or family emission limits, as appropriate) and each class of new motor vehicles or new motor vehicle engines. Such application shall be made to the Administrator by the manufacturer and shall be updated and corrected by amendment.

(b) The application shall be in writing, signed by an authorized representative of the manufacturer, and shall include the following:

(1)(i) Identification and description of the vehicles (or engines) covered by the application and a description of their engine (vehicles only), emission control system and fuel system components. This shall include a detailed description of each auxiliary emission control device (AECD) to be installed in or on any certification test vehicle (or certification test engine).

(ii)(A) The manufacturer shall provide to the Administrator in the application for certification:

(*1*) A list of those parameters which are physically capable of being adjusted (including those adjustable parameters for which access is difficult) and that, if adjusted to settings other than the manufacturer's recommended setting, may affect emissions;

(*2*) A specification of the manufacturer's intended physically adjustable range of each such parameter, and the production tolerances of the limits or stops used to establish the physically adjustable range;

(*3*) A description of the limits or stops used to establish the manufacturer's intended physically adjustable range of each adjustable parameter, or any other means used to inhibit adjustment;

(*4*) The nominal or recommended setting, and the associated production tolerances, for each such parameter.

(B) The manufacturer may provide, in the application for certification, information relating to why certain parameters are not expected to be adjusted in actual use and to why the physical limits or stops used to establish the physically adjustable range of each parameter, or any other means used to inhibit adjustment, are expected to be effective in preventing adjustment of parameters on in-use vehicles to settings outside the manufacturer's intended physically adjustable ranges. This may include results of any tests to determine the difficulty of gaining access to an adjustment or exceeding a limit as intended or recommended by the manufacturer.

(C) The Administrator may require to be provided detailed drawings and descriptions of the various emission related components, and/or hardware samples of such components, for the purpose of making his determination of which vehicle or engine parameter will be subject to adjustment for new certification and Selective Enforcement Audit testing and of the physically adjustable range for each such vehicle or engine parameter.

(2) Projected U.S. sales data sufficient to enable the Administrator to select a test fleet representative of the vehicles (or engines) for which certification is requested. The sales data shall also include the altitude of intended sale for light-duty trucks.

(3) A description of the test equipment and fuel proposed to be used.

(4)(i) For light-duty vehicles and light duty trucks, a description of the

test procedures to be used to establish the evaporative emission deterioration factors required to be determined and supplied in § 86.090–23(b)(2).

(ii) For heavy duty vehicles equipped with gasoline-fueled or methanol-fueled engines, the Administrator does not assume that each evaporative emission family-evaporative emission control system combination will deteriorate in a unique manner during the useful life of the vehicle. The manufacturer shall therefore identify those evaporative emission deterioration factors which shall be applied to the various evaporative emission family-evaporative emission control system combinations which are expected to exhibit similar deterioration characteristics during the useful life of the vehicle.

(iii)(A) A description of the test procedures to be used to establish the durability data or the exhaust emission deterioration factors required to be determined and supplied in § 86.088–23(b)(1).

(B)(*1*) For engine families provided an alternative useful-life period under paragraph (f) of this section, a statement of that alternative period and a brief synopsis of the justification.

(*2*) For heavy-duty diesel engine families, a statement of the primary intended service class (light, medium, or heavy) and an explanation as to why that service class was selected. Each diesel engine family shall be certified under one primary intended service class only. After reviewing the guidance in § 86.085–2, the class shall be determined on the basis of which class best represents the majority of the sales of that engine family.

(C)(*1*) A statement of recommended maintenance and procedures necessary to assure that the vehicles (or engines) covered by a certificate of conformity in operation conform to the regulations, and a description of the program for training of personnel for such maintenance, and the equipment required.

(*2*) A description of vehicle adjustments or modifications necessary, if any, to assure that light-duty vehicles and light-duty trucks covered by a certificate of conformity conform to the regulations while being operated at any altitude locations, and a statement of the altitude at which the adjustments or modifications apply.

(D) At the option of the manufacturer, the proposed composition of the emission-data test fleet or (where applicable) the durability-data test fleet.

(5)(i)(A) If the manufacturer elects to participate in the particulate averaging program for diesel light-duty vehicles and/or diesel light-duty trucks, the application must list the family particulate emission limit and the projected U.S. production volume of the family for the model year.

(B) The manufacturer shall choose the level of the family particulate emission limits, accurate to one-hundredth of a gram per mile.

(C) The manufacturer may at any time during production elect to change the level of any family diesel particulate emission limit(s) by submitting the new limit(s) to the Administrator and by demonstrating compliance with the limit(s) as described in § 86.085–2 and § 86.088–28(b)(5)(i).

(ii)(A) If the manufacturer elects to participate in the NO_X averaging program for light-duty trucks, the application must list the family NO_X emission limit and the projected U.S. production volume of the family for the model year.

(B) The manufacturer shall choose the level of the family NO_X emission limits, accurate to one-tenth of a gram per mile.

(C) The manufacturer may at any time during production elect to change the level of any family NO_X emission limit(s) by submitting the new limits to the Administrator and by demonstrating compliance with the limit(s) as described in § 86.088–2 and § 86.088–28(b)(5)(ii).

(iii) If the manufacturer elects to participate in any of the particulate and/or the NO_X banking programs for heavy-duty engines, the application must list the information required in §§ 86.091–15 and 86.090–23.

(6)(i) For Otto-cycle heavy-duty engines, the application must state whether the engine family is being certified for use in all vehicles regardless of their Gross Vehicle Weight Rating (see § 86.088–10 (a)(1)(i) and (a)(3)(i)), or, only for use in vehicles with a Gross

Vehicle Weight Rating greater than 14,000 pounds.

(ii) If the engine family is being certified for use in all vehicles and, is being certified to the emission standards applicable to Otto-cycle heavy-duty engines for use only in vehicles with a Gross Vehicle Weight Rating over 14,000 pounds under the provisions of paragraph (a)(3) of §86.088–10, then the application must also attest that the engine family, together with all other engine families being certified under the provisions of paragraph (a)(3) of §86.088–10, represent no more than 5 percent of model year sales of the manufacturer of all Otto-cycle heavy duty engines for use in vehicles with Gross Vehicle Weight Ratings of up to 14,000 pounds.

(iii)(A) A description of the test procedures to be used to establish the durability data or the exhaust emission deterioration factors required to be determined and supplied in §86.088–23(b)(1).

(B)(*1*) A statement of the useful life of use of each light-duty truck engine family and heavy-duty engine family.

(*2*) For engine families provided an alternative useful life period under paragraph (f) of this section, a statement of that alternative period and a brief synopsis of the justification.

(*3*) For heavy-duty diesel engine families, a statement of the primary intended service class (light, medium, or heavy) and an explanation as to why that service class was selected. Each diesel engine family shall be certified under one primary intended service class only. After reviewing the guidance in §86.085–2, the class shall be determined on the basis of which class best represents the majority of the sales of that engine family.

(7) For each light-duty vehicle engine family, a statement of recommended maintenance and procedures necessary to assure that the vehicles (or engines) covered by a certificate of conformity in operation conform to the regulations, and a description of the program for training of personnel for such maintenance and the equipment required.

(8) For each light-duty vehicle engine family, the proposed composition of the emission-data test fleet and the durability-data test fleet.

(c) Complete copies of the application and of any amendments thereto, and all notifications under §86.079–32, §86.079–33, and §86.082–84 shall be submitted in such multiple copies as the Administrator may require.

(d) Incomplete light-duty trucks shall have a maximum completed curb weight and maximum completed frontal area specified by the manufacturer.

(e) For vehicles equipped with gasoline-fueled or methanol-fueled heavy-duty engines, the manufacturer shall specify a maximum nominal fuel tank capacity for each evaporative emission family-evaporative emission control system combination.

(f) Light-duty truck and heavy-duty engine manufacturers who believe that the useful life periods of §86.085–2 are significantly unrepresentative for one or more engine families (either too long or too short), may petition the Administrator to provide an alternative useful-life period. This petition must include the full rationale behind the request together with any supporting data and other evidence. Based on this or other information the Administrator may assign an alternative useful-life period. Any petition should be submitted in a timely manner, to allow adequate time for a thorough evaluation.

[54 FR 14468, Apr. 11, 1989, as amended at 55 FR 30618, July 26, 1990]

§86.090–22 Approval of application for certification; test fleet selections; determinations of parameters subject to adjustment for certification and Selective Enforcement Audit, adequacy of limits, and physically adjustable ranges.

(a) After a review of the application for certification and any other information which the Administrator may require, the Administrator may approve the application and select a test fleet in accordance with §86.090–24.

(b) The Administrator may disapprove in whole or in part an application for certification for reasons including incompleteness, inaccuracy, inappropriate proposed mileage (or service) accumulation procedures, test equipment, or fuel, and incorporation of defeat devices in vehicles (or on engines) described by the application.

(c) Where any part of an application is rejected, the Administrator shall notify the manufacturer in writing and set forth the reasons for such rejection. Within 30 days following receipt of such notification, the manufacturer may request a hearing on the Administrator's determination. The request shall be in writing, signed by an authorized representative of the manufacturer and shall include a statement specifying the manufacturer's objections to the Administrator's determinations, and data in support of such objections. If, after the review of the request and supporting data, the Administrator finds that the request raises a substantial factual issue, he shall provide the manufacturer a hearing in accordance with § 86.078–6 with respect to such issue.

(d)(1) The Administrator does not approve the test procedures for establishing the evaporative emission deterioration factors for light-duty vehicles and light-duty trucks. The manufacturer shall submit the procedures as required in § 86.090–21(b)(4)(i) prior to the Administrator's selection of the test fleet under § 86.090–24(b)(1) and if such procedures will involve testing of durability-data vehicles selected by the Administrator or elected by the manufacturer under § 86.090–24(c)(1), prior to initiation of such testing.

(2) *Light-duty trucks and heavy-duty engines only.* The Administrator does not approve the test procedures for establishing exhaust emission deterioration factors. The manufacturer shall submit these procedures and determinations as required in § 86.090–21(b)(4)(iii) prior to determining the deterioration factors.

(3) *Heavy-duty vehicles equipped with gasoline-fueled or methanol-fueled engines only.* The Administrator does not approve the test procedures for establishing the evaporative emission deterioration factors. The test procedure will conform to the requirements in § 86.090–23(b)(3).

(e) When the Administrator selects emission-data vehicles for the test fleet, he will at the same time determine those vehicle or engine parameters which will be subject to adjustment for certification, Selective Enforcement Audit and Production Compliance Audit testing, the adequacy of the limits, stops, seals, or other means used to inhibit adjustment, and the resulting physically adjustable ranges for each such parameter and notify the manufacturer of his determinations.

(1)(i) Except as noted in paragraph (e)(1)(iv) of this section, the Administrator may determine to be subject to adjustment the idle fuel-air mixture parameter on Otto-cycle vehicles (or engines) (carbureted or fuel-injected); the choke valve action parameter(s) on carbureted, Otto-cycle vehicles (or engines); or any parameter on any vehicle (or engine) (Otto-cycle or diesel) which is physically capable of being adjusted, may significantly affect emissions, and was not present on the manufacturer's vehicles (or engines) in the previous model year in the same form and function.

(ii) The Administrator may, in addition, determine to be subject to adjustment any other parameters on any vehicle or engine which is physically capable of being adjusted and which may significantly affect emissions. However, the Administrator may do so only if he has previously notified the manufacturer that he might do so and has found, at the time he gave this notice, that the intervening period would be adequate to permit the development and application of the requisite technology, giving appropriate consideration to the cost of compliance within such period. In no event will this notification be given later than September 1 of the calendar year two years prior to the model year.

(iii) In determining the parameters subject to adjustment the Administrator will consider the likelihood that, for each of the parameters listed in paragraphs (e)(1)(i) and (e)(1)(ii) of this section, settings other than the manufacturer's recommended setting will occur on in-use vehicles (or engines). In determining likelihood, the Administrator may consider such factors as, but not limited to, information contained in the preliminary application, surveillance information from similar in-use vehicles (or engines), the difficulty and cost of gaining access to an adjustment, damage to the vehicle (or engine) if an attempt is made to

gain such access and the need to replace parts following such attempt, and the effect of settings other than the manufacturer's recommended setting on vehicle (or engine) performance characteristics including emission characteristics.

(iv) Manual chokes of heavy-duty engines only will not be considered a parameter subject to adjustment under the parameter adjustment requirements.

(2)(i) The Administrator shall determine a parameter to be adequately inaccessible or sealed if:

(A) In the case of an idle mixture screw, the screw is recessed within the carburetor casting and sealed with lead, thermosetting plastic, or an inverted elliptical spacer or sheared off after adjustment at the factory, and the inaccessibility is such that the screw cannot be accessed and/or adjusted with simple tools in one-half hour or for $20 (1978 dollars) or less.

(B) In the case of a choke bimetal spring, the plate covering the bimetal spring is riveted or welded in place, or held in place with nonreversible screws.

(C) In the case of a parameter which may be adjusted by elongating or bending adjustable members (e.g., the choke vacuum break), the elongation of the adjustable member is limited by design or, in the case of a bendable member, the member is constructed of a material which when bent would return to its original shape after the force is removed (plastic or spring steel materials).

(D) In the case of any parameter, the manufacturer demonstrates that adjusting the parameter to settings other than the manufacturer's recommended setting takes more than one-half hour or costs more than $20 (1978 dollars).

(ii) The Administrator shall determine a physical limit or stop to be an adequate restraint on adjustability if:

(A) In the case of a threaded adjustment, the threads are terminated, pinned or crimped so as to prevent additional travel without breakage or need for repairs which take more than one-half hour or cost more than $20 (1978 dollars).

(B) The adjustment is ineffective at the end of the limits of travel regardless of additional forces or torques applied to the adjustment.

(C) The manufacturer demonstrates that travel or rotation limits cannot be exceeded with the use of simple and inexpensive tools (screwdriver, pliers, open-end or box wrenches, etc.) without incurring significant and costly damage to the vehicle (or engine) or control system or without taking more than one-half hour or costing more than $20 (1978 dollars).

(iii) If manufacturer service manuals or bulletins describe routine procedures for gaining access to a parameter or for removing or exceeding a physical limit, stop, seal or other means used to inhibit adjustment, or if surveillance data indicate that gaining access, removing, or exceeding is likely, paragraphs (e)(2)(i) and (e)(2)(ii) of this section shall not apply for that parameter.

(iv) In determining the adequacy of a physical limit, stop, seal, or other means used to inhibit adjustment of a parameter not covered by paragraph (e)(2)(i) or (e)(2)(ii) of this section, the Administrator will consider the likelihood that it will be circumvented, removed, or exceeded on in-use vehicles. In determining likelihood, the Administrator may consider such factors as, but not limited to, information contained in the preliminary application; surveillance information from similar in-use vehicles (or engines); the difficulty and cost of circumventing, removing, or exceeding the limit, stop, seal, or other means; damage to the vehicle (or engine) if an attempt is made to circumvent, remove, or exceed it and the need to replace parts following such attempt; and the effect of settings beyond the limit, stop, seal, or other means on vehicle (or engine) performance characteristics other than emission characteristics.

(3) The Administrator shall determine two physically adjustable ranges for each parameter subject to adjustment:

(i)(A) In the case of a parameter determined to be adequately inaccessible or sealed, the Administrator may include within the physically adjustable range applicable to testing under this subpart (certification testing) all settings within the production tolerance

associated with the nominal setting for that parameter, as specified by the manufacturer in the preliminary application for certification.

(B) In the case of other parameters, the Administrator shall include within this range all settings within physical limits or stops determined to be adequate restraints on adjustability. The Administrator may also include the production tolerances on the location of these limits or stops when determining the physically adjustable range.

(ii)(A) In the case of a parameter determined to be adequately inaccessible or sealed, the Administrator shall include within the physically adjustable range applicable to testing under subpart G or K (Selective Enforcement Audit and Production Compliance Audit) only the actual settings to which the parameter is adjusted during production.

(B) In the case of other parameters, the Administrator shall include within this range all settings within physical limits or stops determined to be adequate restraints on adjustability, as they are actually located on the test vehicle (or engine).

(f)(1) If the manufacturer submits the information specified in § 86.090–21(b)(1)(ii) in advance of its full preliminary application for certification, the Administrator shall review the information and make the determinations required in paragraph (e) of this section within 90 days of the manufacturer's submittal.

(2) The 90-day decision period is exclusive of the elapsed time during which EPA may request additional information from manufacturers regarding an adjustable parameter and the receipt of the manufacturers' response(s).

(g) Within 30 days following receipt of notification of the Administrator's determinations made under paragraph (e) of this section, the manufacturer may request a hearing on the Administrator's determinations. The request shall be in writing, signed by an authorized representative of the manufacturer, and shall include a statement specifying the manufacturer's objections to the Administrator's determinations, and data in support of such objections. If, after review of the request and supporting data, the Administrator finds that the request raises a substantial factual issue, he shall provide the manufacturer a hearing in accordance with § 86.078–6 with respect to such issue.

[54 FR 14470, Apr. 11, 1989]

§ 86.090–24 Test vehicles and engines.

(a)(1) The vehicles or engines covered by an application for certification will be divided into groupings of engines which are expected to have similar emission characteristics throughout their useful life. Each group of engines with similar emission characteristics shall be defined as a separate engine family.

(2) To be classed in the same engine family, engines must be identical in all the following respects:

(i) The cylinder bore center-to-center dimensions.

(ii)–(iii) [Reserved]

(iv) The cylinder block configuration (air cooled or water cooled; L–6, 90° V–8, etc.).

(v) The location of the intake and exhaust valves (or ports).

(vi) The method of air aspiration.

(vii) The combustion cycle.

(viii) Catalytic converter characteristics.

(ix) Thermal reactor characteristics.

(x) Type of air inlet cooler (*e.g.*, intercoolers and after-coolers) for diesel heavy-duty engines.

(3)(i) Engines identical in all the respects listed in paragraph (a)(2) of this section may be further divided into different engine families if the Administrator determines that they may be expected to have different emission characteristics. This determination will be based upon a consideration of the following features of each engine:

(A) The bore and stroke.

(B) The surface-to-volume ratio of the nominally dimensioned cylinder at the top dead center positions.

(C) The intake manifold induction port size and configuration.

(D) The exhaust manifold port size and configuration.

(E) The intake and exhaust valve sizes.

(F) The fuel system.

(G) The camshaft timing and ignition or injection timing characteristics.

(ii) Light-duty trucks and heavy-duty engines produced in different model years and distinguishable in the respects listed in paragraph (a)(2) of this section shall be treated as belonging to a single engine family if the Administrator requires it, after determining that the engines may be expected to have similar emission deterioration characteristics.

(4) Where engines are of a type which cannot be divided into engine families based upon the criteria listed in paragraphs (a)(2) and (a)(3) of this section, the Administrator will establish families for those engines based upon those features most related to their emission characteristics. Engines that are eligible to be included in the same engine family based on the criteria in paragraphs (a)(2) and (a)(3)(i) of this section may be further divided into different engine families if the manufacturer determines that they may be expected to have different emission characteristics. This determination will be based upon a consideration of the following features of each engine:

(i) The dimension from the center line of the crankshaft to the center line of the camshaft.

(ii) The dimension from the center line of the crankshaft to the top of the cylinder block head face.

(iii) The size of the intake and exhaust valves (or ports).

(5) Gasoline-fueled and methanol-fueled light-duty vehicles and light-duty trucks covered by an application for certification will be divided into groupings which are expected to have similar evaporative emission characteristics throughout their useful life. Each group of vehicles with similar evaporative emission characteristics shall be defined as a separate evaporative emission family.

(6) For gasoline-fueled or methanol-fueled light-duty vehicles and light-duty trucks to be classed in the same evaporative emission family, vehicles must be similar with respect to:

(i) Type of vapor storage device (*e.g.*, canister, air cleaner, crankcase).

(ii) Basic canister design.

(iii) Fuel system.

(7) Where vehicles are of a type which cannot be divided into evaporative emission families based on the criteria listed above, the Administrator will establish families for those vehicles based upon the features most related to their evaporative emission characteristics.

(8)(i) If the manufacturer elects to participate in the Alternative Durability Program, the engine families covered by an application for certification shall be grouped based upon similar engine design and emission control system characteristics. Each of these groups shall constitute a separate engine family group.

(ii) To be classed in the same engine family group, engine families must contain engines identical in all of the following respects:

(A) The combustion cycle.

(B) The cylinder block configuration (air-cooled or water-cooled; L–6, V–8, rotary, etc.).

(C) Displacement (engines of different displacement within 50 cubic inches or 15 percent of the largest displacement and contained within a multidisplacement engine family will be included in the same engine family group).

(D) Catalytic converter usage and basic type (noncatalyst, oxidation catalyst only, three-way catalyst equipped).

(9) Engine families identical in all respects listed in paragraph (a)(8) of this section may be further divided into different engine family groups if the Administrator determines that they are expected to have significantly different exhaust emission control system deterioration characteristics.

(10) A manufacturer may request the Administrator to include in an engine family group, engine families in addition to those grouped under the provisions of paragraph (a)(8) of this section. This request must be accompanied by information the manufacturer believes supports the inclusion of these additional engine families.

(11) A manufacturer may combine into a single engine family group those light-duty vehicle and light-duty truck engine families which otherwise meet the requirements of paragraphs (a)(8) through (a)(10) of this section.

(12) The vehicles covered by an application for certification equipped with gasoline-fueled or methanol-fueled

heavy-duty engines will be divided into groupings of vehicles on the basis of physical features which are expected to affect evaporative emissions. Each group of vehicles with similar features shall be defined as a separate evaporative emission family.

(13) For vehicles equipped with gasoline-fueled or methanol-fueled heavy-duty engines to be classed in the same evaporative emission family, vehicles must be identical with respect to:

(i) Method of fuel/air metering (*i.e.*, carburetion versus fuel injection).

(ii) Carburetor bowl fuel volume, within a 10 cc range.

(14) For vehicles equipped with gasoline-fueled or methanol-fueled heavy-duty engines to be classed in the same evaporative emission control system, vehicles must be identical with respect to:

(i) Method of vapor storage.

(ii) Method of carburetor sealing.

(iii) Method of air cleaner sealing.

(iv) Vapor storage working capacity, within a 20 g range.

(v) Number of storage devices.

(vi) Method of purging stored vapors.

(vii) Method of venting the carburetor during both engine off and engine operation.

(viii) Liquid fuel hose material.

(ix) Vapor storage material.

(15) Where vehicles equipped with gasoline-fueled or methanol-fueled heavy-duty engines are types which cannot be divided into evaporative emission family-control system combinations based on the criteria listed above, the Administrator will establish evaporative emission family-control system combinations for those vehicles based on features most related to their evaporative emission characteristics.

(16) No 1990 or later model year heavy-duty engine which is to be used to generate emission credits for 1991 and later banking, trading and averaging programs may also utilize nonconformance penalties (NCPs). Use of an NCP thus becomes an engine family criterion.

(i) Use of either a NO_X or a particulate matter NCP by an engine family precludes that family from generating both NO_X and particulate matter emission credits.

(ii) If a manufacturer desires to use both banked credits and NCPs on an engine family, two separate engine families must be established. One engine family must consist of engines certified for only credit use following the procedure specified in this subpart. The other engine family must be certified for only NCP use following the procedure as specified in 40 CFR part 86, subpart L.

(17) Any 1990 or later model year urban bus engines which are to be used to generate PM credits for the 1991 and later model year urban bus PM standard shall be placed in separate engine families for certification purposes and the families shall be clearly designated as such in the application. Urban bus engines of different basic design will not be in the same family. If a manufacturer certifies two or more different urban bus engines these shall be in different engine families.

(b) *Emission data*—(1) *Emission-data vehicles.* Paragraph (b)(1) of this section applies to light-duty vehicle and light-duty truck emission-data vehicles.

(i) Vehicles will be chosen to be operated and tested for emission data based upon engine family groupings. Within each engine family, one test vehicle will be selected based on the following criteria: The Administrator shall select the vehicle with the heaviest equivalent test weight (including options) within the family. Then within that vehicle the Administrator shall select, in the order listed, the highest road-load power, largest displacement, the transmission with the highest numerical final gear ratio (including overdrive), the highest numerical axle ratio offered in that engine family and the maximum fuel flow calibration.

(ii) The Administrator shall select one additional test vehicle from within each engine family. The vehicle selected shall be the vehicle expected to exhibit the highest emissions of those vehicles remaining in the engine family. If all vehicles within the engine family are similar the Administrator may waive the requirements of this paragraph.

(iii) Within an engine family and exhaust emission control system, the manufacturer may alter any emission-data vehicle (or other vehicles such as

including current or previous model year emission-data vehicles, fuel economy data vehicles, and development vehicles provided they meet emission-data vehicles, protocol) to represent more than one selection under paragraphs (b)(1) (i), (ii), (iv), or (vii) of this section.

(iv) If the vehicles selected in accordance with paragraphs (b)(1) (i) and (ii) of this section do not represent each engine-system combination, then one vehicle of each engine-system combination not represented will be selected by the Administrator. The vehicle selected shall be the vehicle expected to exhibit the highest emissions of those vehicles remaining in the engine family.

(v) For high-altitude exhaust emission compliance for each engine family, the manufacturer shall follow one of the following procedures:

(A) The manufacturer will select for testing under high-altitude conditions the vehicle expected to exhibit the highest emissions from the nonexempt vehicles selected in accordance with § 86.090–24(b)(1) (ii), (iii), and (iv) of this section or,

(B) In lieu of testing vehicles according to paragraph (b)(1)(v)(A) of this section, a manufacturer may provide a statement in its application for certification that, based on the manufacturer's engineering evaluation of such high-altitude emission testing as the manufacturer deems appropriate,

(*1*) That all light-duty vehicles not exempt under § 86.090–8(h) comply with the emission standards at high-altitude, and

(*2*) That light-duty trucks sold for principal use at designated high-altitude locations comply with the high-altitude emission requirements, and that all light-duty trucks sold at low-altitude, which are not exempt under § 86.090–9(g)(2), are capable of being modified to meet high-altitude standards.

(vi) If 90 percent or more of the engine family sales will be in California, a manufacturer may substitute emission-data vehicles selected by the California Air Resources Board criteria for the selections specified in paragraphs (b)(1) (i), (ii), and (iv) of this section.

(vii)(A) Vehicles of each evaporative emission family will be divided into evaporative emission control systems.

(B) The Administrator will select the vehicle expected to exhibit the highest evaporative emissions, from within each evaporative family to be certified, from among the vehicles represented by the exhaust emission-data selections for the engine family, unless evaporative testing has already been completed on the vehicle expected to exhibit the highest evaporative emissions for the evaporative family as part of another engine family's testing.

(C) If the vehicles selected in accordance with paragraph (b)(1)(vii)(B) of this section do not represent each evaporative emission control system then the Administrator will select the highest expected evaporative emission vehicle from within the unrepresented evaporative system.

(viii) For high-altitude evaporative emission compliance for each evaporative emission family, the manufacturer shall follow one of the following procedures:

(A) The manufacturer will select for testing under high-altitude conditions the one nonexempt vehicle previously selected under paragraphs (b)(1)(vii) (B) or (C) of this section which is expected to have the highest level of evaporative emissions when operated at high altitude or

(B) In lieu of testing vehicles according to paragraph (b)(1)(viii)(A) of this section, a manufacturer may provide a statement in its application for certification that based on the manufacturer's engineering evaluation of such high-altitude emission testing as the manufacturer deems appropriate,

(*1*) That all light-duty vehicles not exempt under § 86.090–8(h) comply with the emission standards at high altitude and

(*2*) That light-duty trucks sold for principal use at designated high-altitude locations comply with the high-altitude emission requirements, and that all light-duty trucks sold at low altitude, which are not exempt under § 86.090–9(g)(2), are capable of being modified to meet high-altitude standards.

(ix) Vehicles selected under paragraph (b)(1)(v)(A) of this section may

be used to satisfy the requirements of (b)(1)(viii)(A) of this section.

(x) *Light-duty trucks only:* (A) The manufacturer may reconfigure any of the low-altitude emission-data vehicles to represent the vehicle configuration required to be tested at high altitude.

(B) The manufacturer is not required to test the reconfigured vehicle at low altitude.

(2) *Otto-cycle heavy-duty emission-data engines.* Paragraph (b)(2) of this section applies to Otto-cycle heavy-duty engines.

(i)–(ii) [Reserved]

(iii) The Administrator shall select a maximum of two engines within each engine family based upon features indicating that they may have the highest emission levels of the engines in the engine family as follows:

(A) The Administrator shall select one emission-data engine first based on the largest displacement within the engine family. Then within the largest displacement the Administrator shall select, in the order listed, highest fuel flow at the speed of maximum rated torque, the engine with the most advanced spark timing, no EGR or lowest EGR flow, and no air pump or lowest actual flow air pump.

(B) The Administrator shall select one additional engine, from within each engine family. The engine selected shall be the engine expected to exhibit the highest emissions of those engines remaining in the engine family. If all engines within the engine family are similar the Administrator may waive the requirements of this paragraph.

(iv) If the engines selected in accordance with paragraphs (b)(2) (ii) and (iii) of this section do not represent each engine displacement-exhaust emission control system combination, then one engine of each engine displacement-exhaust emission control system combination not represented shall be selected by the Administrator.

(v) Within an engine family/displacement/control system, the manufacturer may alter any emission-data engine (or other engine including current or previous model year emission-data vehicles and development engines provided they meet the emission-data engines protocol) to represent more than one selection under paragraphs (b)(2)(iii) of this section.

(3) *Diesel heavy-duty emission-data engines.* Paragraph (b)(3) of this section applies to diesel heavy-duty emission-data vehicles.

(i) Engines will be chosen to be run for emission data based upon engine family groupings. Within each engine family, the requirements of this paragraph must be met.

(ii) Engines of each engine family will be divided into groups based upon their exhaust emission control systems. One engine of each engine system combination shall be run for smoke emission data (diesel engines only) and gaseous emission data. Either the complete gaseous emission test or the complete smoke test may be conducted first. Within each combination, the engine that features the highest fuel feed per stroke, primarily at the speed of maximum rated torque and secondarily at rated speed, will usually be selected. If there are military engines with higher fuel rates than other engines in the same engine system combinations, then one military engine shall also be selected. The engine with the highest fuel feed per stroke will usually be selected.

(iii) The Administrator may select a maximum of one additional engine within each engine-system combination based upon features indicating that it may have the highest emission levels of the engines of that combination. In selecting this engine, the Administrator will consider such features as the injection system, fuel system, compression ratio, rated speed, rated horsepower, peak torque speed, and peak torque.

(iv) Within an engine family control system combination, the manufacturer may alter any emission-data engine (or other engine including current or previous model year emission-data vehicles and development engines provided they meet the emission-data engines' protocol) to represent more than one selection under paragraphs (b)(3) (ii) and (iii) of this section.

(c) *Durability data*—(1) *Light-duty vehicle durability-data vehicles.* Paragraph (c)(1) of this section applies to light-duty vehicle durability-data vehicles.

(i) A durability-data vehicle will be selected by the Administrator to represent each engine-system combination. The vehicle selected shall be of the engine displacement with the largest projected sales volume of vehicles with that control-system combination in that engine family and will be designated by the Administrator as to transmission type, fuel system, inertia weight class, and test weight.

(ii) A manufacturer may elect to operate and test additional vehicles to represent any engine-system combination. The additional vehicles must be of the same engine displacement, transmission type, fuel system and inertia weight class as the vehicle selected for that engine-system combination in accordance with the provisions of paragraph (c)(1)(i) of this section. Notice of an intent to operate and test additional vehicles shall be given to the Administrator no later than 30 days following notification of the test fleet selection.

(2) *Light-duty trucks.* Paragraph (c)(2) of this section applies to vehicles, engines, subsystems, or components used to establish exhaust emission deterioration factors for light-duty trucks.

(i) The manufacturer shall select the vehicles, engines, subsystems, or components to be used to determine exhaust emission deterioration factors for each engine-family control system combination. Whether vehicles, engines, subsystems, or components are used, they shall be selected so that their emissions deterioration characteristics may be expected to represent those of in-use vehicles, based on good engineering judgment.

(ii) [Reserved]

(3) *Heavy-duty engines.* Paragraph (c)(3) of this section applies to engines, subsystems, or components used to establish exhaust emission deterioration factors for heavy-duty engines.

(i) The manufacturer shall select the engines, subsystems, or components to be used to determine exhaust emission deterioration factors for each engine-family control system combination. Whether engines, subsystems, or components are used, they shall be selected so that their emissions deterioration characteristics may be expected to represent those of in-use engines, based on good engineering judgment.

(ii) [Reserved]

(d) For purposes of testing under § 86.084–26 (a)(9) or (b)(11), the Administrator may require additional emission-data vehicles (or emission-data engines) and durability-data vehicles (light-duty vehicles only) identical in all material respects to vehicles (or engines) selected in accordance with paragraphs (b) and (c) of this section, *provided* that the number of vehicles (or engines) selected shall not increase the size of either the emission-data fleet or the durability-data fleet by more than 20 percent or one vehicle (or engine), whichever is greater.

(e)(1) Any manufacturer whose projected sales for the model year in which certification is sought is less than:

(i) 2,000 Otto-cycle light-duty vehicles, or

(ii) 2,000 diesel light-duty vehicles, or

(iii) 2,000 Otto-cycle light-duty trucks, or

(iv) 2,000 diesel light-duty trucks, or

(v) 2,000 Otto-cycle heavy-duty engines, or

(vi) 2,000 diesel heavy-duty engines, may request a reduction in the number of test vehicles (or engines) determined in accordance with the foregoing provisions of this section. The Administrator may agree to such lesser number as he determines would meet the objectives of this procedure.

(2) Any manufacturer may request to certify engine families with combined total sales of fewer than 10,000 light-duty vehicles, light-duty trucks, and heavy-duty engines utilizing assigned deterioration factors prescribed by the Administrator. The assigned deterioration factors shall be applied only to entire engine families.

(f) In lieu of testing an emission-data or durability-data vehicle (or engine) selected under paragraph (b) or (c) of this section, and submitting data therefore, a manufacturer may, with the prior written approval of the Administrator, submit exhaust emission data and/or fuel evaporative emission data, as applicable on a similar vehicle (or engine) for which certification has previously been obtained or for which all applicable data required under

§ 86.090–23 has previously been submitted.

(g)(1) This paragraph applies to light-duty vehicles and light-duty trucks, but does not apply to the production vehicles selected under paragraph (h) of this section.

(2)(i) Where it is expected that more than 33 percent of a carline, within an engine-system combination will be equipped with an item (whether that item is standard equipment or an option), the full estimated weight of that item shall be included in the curb weight computation for each vehicle available with that option in that carline, within that engine-system combination.

(ii) Where it is expected that 33 percent or less of the carline, within an engine-system, will be equipped with an item of (whether that item is standard equipment or an option), no weight for that item will be added in computing curb weight for any vehicle in that carline, within that engine-system combination, unless that item is standard equipment on the vehicle.

(iii) In the case of mutually exclusive options, only the weight of the heavier option will be added in computing curb weight.

(iv) Optional equipment weighing less than 3 pounds per item need not be considered.

(3)(i) Where it is expected that more than 33 percent of a carline, within an engine-system combination will be equipped with an item of (whether that item is standard equipment or an option) that can reasonably be expected to influence emissions, then such items shall actually be installed (unless excluded under paragraph (g)(3)(ii) of this section) on all emission data and durability data vehicles of that carline, within that engine-system combination, on which the items are intended to be offered in production. Items that can reasonably be expected to influence emissions are: air conditioning, power steering, power brakes and other items determined by the Administrator.

(ii) If the manufacturer determines by test data or engineering evaluation that the actual installation of the optional equipment required by paragraph (g)(3)(i) of this section does not affect the emissions or fuel economy values, the optional equipment need not be installed on the test vehicle.

(iii) The weight of the options shall be included in the design curb weight and also be represented in the weight of the test vehicles.

(iv) The engineering evaluation, including any test data, used to support the deletion of optional equipment from test vehicles, shall be maintained by the manufacturer and shall be made available to the Administrator upon request.

(4) Where it is expected that 33 percent or less of a carline, within an engine system combination will be equipped with an item of (whether that item is standard equipment or an option) that can reasonably be expected to influence emissions, that item shall not be installed on any emission data or durability data vehicles of that carline, within that engine-system combination, unless that item is standard equipment on the vehicle.

(h) Alternative Durability Program durability-data vehicles. This section applies to light-duty vehicle and light-duty truck durability-data vehicles selected under the Alternative Durability Program described in § 86.085–13.

(1) In order to update the durability data to be used to determine a deterioration factor for each engine family group, the Administrator will select durability-data vehicles from the manufacturer's production line. Production vehicles will be selected from each model year's production for those vehicles certified using the Alternative Durability Program procedures.

(i) The Administrator shall select the production durability-data vehicle designs from the designs that the manufacturer offers for sale. For each model year and for each engine family group, the Administrator may select production durability-data vehicle designs of equal number to the number of engine families within the engine family group, up to a maximum of three vehicles.

(ii) The production durability-data vehicles representing the designs selected in paragraph (h)(1)(i) of this section will be randomly selected from the manufacturer's production. The Administrator will make these random

selections unless the manufacturer (with prior approval of the Administrator) elects to make the random selections.

(iii) The manufacturer may select additional production durability-data vehicle designs from within the engine family group. The production durability-data vehicles representing these designs shall be randomly selected from the manufacturer s production in accordance with paragraph (h)(l)(ii) of this section.

(iv) For each production durability-data vehicle selected under paragraph (h)(1) of this section, the manufacturer shall provide to the Administrator (before the vehicle is tested or begins service accumulation) the vehicle identification number. Before the vehicle begins service accumulation the manufacturer shall also provide the Administrator with a description of the durability-data vehicle as specified by the Administrator.

(v) In lieu of testing a production durability-data vehicle selected under paragraph (h)(1) of this section, and submitting data therefrom, a manufacturer may, with the prior written approval of the Administrator, submit exhaust emission data from a production vehicle of the same configuration for which all applicable data has previously been submitted.

(2) If, within an existing engine family group, a manufacturer requests to certify vehicles of a new design, engine family, emission control system, or with any other durability-related design difference, the Administrator will determine if the existing engine family group deterioration factor is appropriate for the new design. If the Administrator cannot make this determination or deems the deterioration factor not appropriate, the Administrator shall select preproduction durability-data vehicles under the provisions of paragraph (c) of this section. If vehicles are then certified using the new design, the Administrator may select production vehicles with the new design under the provisions of paragraph (h)(1) of this section.

(3) If a manufacturer reguests to certify vehicles of a new design that the Administrator determines are a new engine family group, the Administrator shall select preproduction durability data vehicles under the provisions of paragraph (c) of this section. If vehicles are then certified using the new design, the Administrator may select production vehicles of that design under the provisions of paragraph (h)(1) of this section.

[54 FR 14474, Apr. 11, 1989, as amended at 55 FR 30618, July 26, 1990]

§86.090–25 Maintenance.

(a) *Applicability*. This section applies to light-duty vehicles, light-duty trucks, and heavy-duty engines.

(1) Maintenance performed on vehicles, engines, subsystems, or components used to determine exhaust or evaporative emission deterioration factors is classified as either emission-related or non-emission-related and each of these can be classified as either scheduled or unscheduled. Further, some emission-related maintenance is also classified as critical emission-related maintenance.

(b) This section specifies emission-related scheduled maintenance for purposes of obtaining durability data and for inclusion in maintenance instructions furnished to purchasers of new motor vehicles and new motor vehicles engines under §86.087–38.

(1) All emission-related scheduled maintenance for purposes of obtaining durability data must occur at the same mileage intervals (or equivalent intervals if engines, subsystems, or components are used) that will be specified in the manufacturer's maintenance instructions furnished to the ultimate purchaser of the motor vehicle or engine under §86.088–35. This maintenance schedule may be updated as necessary throughout the testing of the vehicle/engine provided that no maintenance operation is deleted from the maintenance schedule after the operation has been performed on the test vehicle or engine.

(2) Any emission-related maintenance which is performed on vehicles, engines, subsystems, or components must be technologically necessary to assure in-use compliance with the emission standards. The manufacturer must submit data which demonstrate to the Administrator that all of the

emission-related scheduled maintenance which is to be performed is technologically necessary. Scheduled maintenance must be approved by the Administrator prior to being performed or being included in the maintenance instructions provided to purchasers under § 86.087–38. As provided below, EPA has determined that emission-related maintenance at shorter intervals than that outlined in paragraphs (b)(3) and (b)(4) of this section is not technologically necessary to ensure in-use compliance. However, the Administrator may determine that maintenance even more restrictive (*e.g.*, longer intervals) than that listed in paragraphs (b)(3) and (b)(4) of this section is also not technologically necessary.

(3) For Otto-cycle light-duty vehicles, light-duty trucks and heavy duty engines, emission-related maintenance in addition to, or at shorter intervals than, the following will not be accepted as technologically necessary, except as provided in paragraph (b)(7) of this section.

(i)(A) The cleaning or replacement of light-duty vehicle or light-duty truck spark plugs at 30,000 miles of use and at 30,000 mile intervals thereafter.

(B) The cleaning or replacement of Otto-cycle heavy duty engine spark plugs at 25,000 miles (or 750 hours) of use and at 25,000 mile intervals (or 750-hour) intervals thereafter, for engines certified for use with unleaded fuel only.

(4) For diesel powered light-duty vehicles, light-duty trucks, and heavy-duty engines, emission-related maintenance in addition to, or at shorter intervals than, the following will not be accepted as technologically necessary, except as provided in paragraph (b)(7) of this section.

(i) For light-duty vehicles, the adjustment, cleaning, repair, or replacement of the following may not be performed within the 50,000-mile useful life of the vehicle:

(A) Exhaust gas recirculation system (including all related filters and control valves).

(B) Positive crankcase ventilation valve.

(C) Fuel injectors.

(D) Turbocharger.

(E) Electronic engine control unit and its associated sensors and actuators.

(F) Particulate trap or trap-oxidizer system (including related components).

(ii) For light-duty trucks and heavy-duty engines, the adjustment, cleaning, repair, or replacement of the following at 50,000 miles (or 1,500 hours) of use and at 50,000-mile (or 1,500-hour) intervals thereafter:

(A) Exhaust gas recirculation system (including all related filters and control valves).

(B) Positive crankcase ventilation valve.

(C) Fuel injector tips (cleaning *only*).

(iii) The following maintenance at 100,000 miles (or 3,000 hours) of use and at 100,000-mile (or 3,000-hour) intervals thereafter for light-duty trucks and light heavy-duty engines, or, at 150,000 miles (or 4,500 hours) of use and at 150,000-mile (or 4,500-hour) intervals thereafter for medium and heavy-duty engines: The adjustment, cleaning, repair, or replacement of:

(A) Fuel injectors.

(B) Turbocharger.

(C) Electronic engine control unit and its associated sensors and actuators.

(D) Particulate trap or trap-oxidizer system (including related components).

(5) [Reserved]

(6)(i) The following components are currently defined as critical emission-related components:

(A) Catalytic converter.

(B) Air injection system components.

(C) Electronic engine control unit and its associated sensors (including oxygen sensor if installed) and actuators.

(D) Exhaust gas recirculation system (including all related filters and control valves).

(E) Positive crankcase ventilation valve.

(F) Evaporative emission control system components (excluding canister air filter).

(G) Particulate trap or trap-oxidizer system.

(ii) All critical emission-related scheduled maintenance must have a reasonable likelihood of being performed in-use. The manufacturer shall be required to show the reasonable

likelihood of such maintenance being performed in-use, and such showing shall be made prior to the performance of the maintenance on the durability data vehicle. Critical emission-related scheduled maintenance items which satisfy one of the following conditions will be accepted as having a reasonable likelihood of the maintenance item being performed in-use:

(A) Data are presented which establish for the Administrator a connection between emissions and vehicle performance such that as emissions increase due to lack of maintenance, vehicle performance will simultaneously deteriorate to a point unacceptable for typical driving.

(B) Survey data are submitted which adequately demonstrate to the Administrator that, at an 80 percent confidence level, 80 percent of such engines already have this critical maintenance item performed in-use at the recommended interval(s).

(C) A clearly displayed visible signal system approved by the Administrator is installed to alert the vehicle driver that maintenance is due. A signal bearing the message ''maintenance needed'' or ''check engine,'' or a similar message approved by the Administrator, shall be actuated at the appropriate mileage point or by component failure. This signal must be continuous while the engine is in operation, and not be easily eliminated without performance of the required maintenance. Resetting the signal shall be a required step in the maintenance operation. The method for resetting the signal system shall be approved by the Administrator.

(D) A manufacturer may desire to demonstrate through a survey that a critical maintenance item is likely to be performed without a visible signal on a maintenance item for which there is no prior in-use experience without the signal. To that end, the manufacturer may in a given model year market up to 200 randomly selected vehicles per critical emission-related maintenance item without such visible signals, and monitor the performance of the critical maintenance item by the owners to show compliance with paragraph (b)(6)(ii)(B) of this section. This option is restricted to two consecutive model years and may not be repeated until any previous survey has been completed. If the critical maintenance involves more than one engine family, the sample will be sales weighted to ensure that it is representative of all the families in question.

(E) The manufacturer provides the maintenance free of charge, and clearly informs the customer that the maintenance is free in the instructions provided under § 86.087–38.

(F) Any other method which the Administrator approves as establishing a reasonable likelihood that the critical maintenance will be performed in-use.

(iii) Visible signal systems used under paragraph (b)(6)(ii)(C) of this section are considered an element of design of the emission control system. Therefore, disabling, resetting, or otherwise rendering such signals inoperative without also performing the indicated maintenance procedure is a prohibited act under section 203(a)(3) of the Clean Air Act, as amended in August 1977 (42 U.S.C. 7522(a)(3)).

(7) *Changes to scheduled maintenance.* (i) For maintenance practices that existed prior to the 1980 model year, only the maintenance items listed in paragraphs (b)(3) and (b)(4) of this section are currently considered by EPA to be emission-related. The Administrator may, however, determine additional scheduled maintenance items that existed prior to the 1980 model year to be emission-related by announcement in a FEDERAL REGISTER Notice. In no event may this notification occur later than September 1 of the calendar year two years prior to the affected model year.

(ii) In the case of any new scheduled maintenance, the manufacturer must submit a request for approval to the Administrator for any maintenance that it wishes to recommend to purchasers and perform during durability determination. New scheduled maintenance is that maintenance which did not exist prior to the 1980 model year, including that which is a direct result of the implementation of new technology not found in production prior to the 1980 model year. The manufacturer must also include its recommendations as to the category (*i.e.,* emission-related or non-emission- related, critical or non-critical) of the subject maintenace and, for suggested emission-related

maintenance, the maximum feasible maintenance interval. Such requests must include detailed evidence supporting the need for the maintenance requested, and supporting data or other substantiation for the recommended maintenance category and for the interval suggested for emission-related maintenance. Requests for new scheduled maintenance must be approved prior to the introduction of the new maintenance. The Administrator will then designate the maintenance as emission-related or non-emission-related. For maintenance items established as emission-related, the Administrator will further designate the maintenance as critical if the component which receives the maintenance is a critical component under paragraph (b)(6) of this section. For each maintenance item designated as emission-related, the Administrator will also establish a technologically necessary maintenance interval, based on industry data and any other information available to EPA. Designations of emission-related maintenance items, along with their identification as critical or non-critical, and establishment of technologically necessary maintenance intervals, will be announced in the FEDERAL REGISTER.

(iii) Any manufacturer may request a hearing on the Administrator's determinations in paragraph (b)(7) of this section. The request shall be in writing, and shall include a statement specifying the manufacturer's objections to the Administrator's determinations, and data in support of such objections. If, after review of the request and supporting data, the Administrator finds that the request raises a substantial factual issue, he shall provide the manufacturer a hearing in accordance with § 86.078–6 with respect to such issue.

(c) Non-emission-related scheduled maintenance which is reasonable and technologically necessary (*e.g.*, oil change, oil filter change, fuel filter change, air filter change, cooling system maintenance, adjustment of idle speed, governor, engine bolt torque, valve lash, injector lash, timing, etc.) may be performed on durability-data vehicles at the intervals recommended by the manufacturer to the ultimate purchaser.

(d) *Unscheduled maintenance on light-duty durability data vehicles.* (1) Unscheduled maintenance may be performed during the testing used to determine deterioration factors, except as provided in paragraphs (d)(2) and (d)(3) of this section, only under the following provisions:

(i) A fuel injector or spark plug may be changed if a persistent misfire is detected.

(ii) Readjustment of an Otto-cycle vehicle cold-start enrichment system may be performed if there is a problem of stalling.

(iii) Readjustment of the engine idle speed (curb idle and fast idle) may be performed in addition to that performed as scheduled maintenance under paragraph (c) of this section, if the idle speed exceeds the manufacturer's recommended idle speed by 300 rpm or more, or if there is a problem of stalling.

(2) Any other unscheduled vehicle, emission control system, or fuel system adjustment, repair, removal, disassembly, cleaning, or replacement during testing to determine deterioration factors shall be performed only with the advance approval of the Administrator. Such approval will be given if the Administrator:

(i) Has made a preliminary determination that the part failure or system malfunction, or the repair of such failure or malfunction, does not render the vehicle or engine unrepresentative of vehicles or engines in-use, and does not require direct access to the combustion chamber, except for spark plug, fuel injection component, or removable prechamber removal or replacement; and,

(ii) Has made a determination that the need for maintenance or repairs is indicated by an overt indication of malfunction such as persistent misfiring, engine stalling, overheating, fluid leakage, loss of oil pressure, excessive fuel consumption or excessive power loss. The Administrator shall be given the opportunity to verify the existence of an overt indication of part failure and/or vehicle/engine malfunction (*e.g.*, misfiring, stalling, black smoke), or an activation of an audible and/or visible

signal, prior to the performance of any maintenance to which such overt indication or signal is relevant under the provisions of this section.

(3) Emission measurement may not be used as a means of determining the need for unscheduled maintenance under paragraph (d)(2) of this section, except under the following conditions:

(i) The Administrator may approve unscheduled maintenance on durability-data vehicles based upon a significant change in emission levels that indicates a vehicle or engine malfunction. In these cases the Administrator may first approve specific diagnostic procedures to identify the source of the problem. The Administrator may further approve of specific corrections to the problem after the problem has been identified. The Administrator may only approve the corrective action after it is determined that:

(A) The malfunction was caused by nonproduction build practices or by a previously undetected design problem,

(B) The malfunction will not occur in production vehicles or engines in-use, *and*

(C) The deterioration factor generated by the durability-data vehicle or engine will remain unaffected by the malfunction or by the corrective action (*e.g.*, the malfunction was present for only a short period of time before detection, replacement parts are functionally representative of the proper mileage or hours, etc.).

(ii) Following any unscheduled maintenance approved under paragraph (d)(3)(i) of this section, the manufacturer shall perform an after-maintenance emissions test. If the Administrator determines that the after-maintenance emission levels for any pollutant indicates that the deterioration factor is no longer representative of production, the Administrator may disqualify the durability-data vehicle or engine.

(4) If the Administrator determines that part failure or system malfunction occurrence and/or repair rendered the vehicle/engine unrepresentative of vehicles in-use, the vehicle/engine shall not be used for determining deterioration factors.

(5) Repairs to vehicle components of a durability data vehicle other than the engine, emission control system, or fuel system, shall be performed only as a result of part failure, vehicle system malfunction, or with the advance approval of the Administrator.

(e) *Maintenance on emission data vehicles and engines.* (1) Adjustment of engine idle speed on emission data vehicles may be performed once before the low-mileage/low-hour emission test point. Any other engine, emission control system, or fuel system adjustment, repair, removal, disassembly, cleaning, or replacement on emission data vehicles shall be performed only with the advance approval of the Administrator.

(2) Maintenance on light-duty truck emission-data vehicles selected under § 86.090–24(b)(1) (v) or (vii), and permitted to be tested for purposes of § 86.090–23(c)(1)(ii) under the provisions of § 86.090–24(b)(2), may be performed in conjunction with emission control system modifications at the low-mileage test point, and shall be performed in accordance with the maintenance instructions to be provided to the ultimate purchaser required under § 86.087–38.

(3) Maintenance on those light-duty truck emission-data vehicles selected under 86.090–24(b)(1)(v) which are not capable of being modified in the field for the purpose of complying with emissions standards at an altitude other than that intended by the original design, may be performed in conjunction with the emission control system modifications at the low-mileage test point, and shall be approved in advance by the Administrator.

(4) Repairs to vehicle components of an emission data vehicle other than the engine, emission control system, or fuel system, shall be performed only as a result of part failure, vehicle system malfunction, or with the advance approval of the Administrator.

(f) Equipment, instruments, or tools may not be used to identify malfunctioning, maladjusted, or defective engine components unless the same or equivalent equipment, instruments, or tools will be available to dealerships and other service outlets and:

(1) Are used in conjunction with scheduled maintenance on such components, or

(2) Are used subsequent to the identification of a vehicle or engine malfunction, as provided in paragraph (d)(2) of this section for durability data vehicles or in paragraph (e)(1) of this section for emission-data vehicles, or

(3) Unless specifically authorized by the Administrator.

(g)(1) Paragraph (g) of this section applies to light-duty vehicles.

(2) Complete emission tests (see §§ 86.106 through 86.145) are required, unless waived by the Administrator, before and after scheduled maintenance approved for durability data vehicles. The manufacturer may perform emission tests before unscheduled maintenance. Complete emission tests are required after unscheduled maintenance which may reasonably be expected to affect emissions. The Administrator may waive the requirement to test after unscheduled maintenance. These test data may be submitted weekly to the Administrator, but shall be air posted or delivered within 7 days after completion of the tests, along with a complete record of all pertinent maintenance, including a preliminary engineering report of any malfunction diagnosis and the corrective action taken. A complete engineering report shall be delivered to the Administrator concurrently with the manufacturer's application for certification.

(h) All test data, maintenance reports, and required engineering reports shall be compiled and provided to the Administrator in accordance with § 86.090–23.

[53 FR 471, Jan. 7, 1988, as amended at 54 FR 14478, Apr. 11, 1989]

§ 86.090–26 Mileage and service accumulation; emission requirements.

(a)(1) Paragraph (a) of this section applies to light-duty vehicles.

(2) The procedure for mileage accumulation will be the Durability Driving Schedule as specified in appendix IV to this part. A modified procedure may also be used if approved in advance by the Administrator. Except with the advance approval of the Administrator, all vehicles will accumulate mileage at a measured curb weight which is within 100 pounds of the estimated curb weight. If the loaded vehicle weight is within 100 pounds of being included in the next higher inertia weight class as specified in § 86.129, the manufacturer may elect to conduct the respective emission tests at higher loaded vehicle weight.

(3) *Emission-data vehicles.* Unless otherwise provided for in § 86.090–23(a), emission-data vehicles shall be operated and tested as follows:

(i) *Otto-cycle.* (A) The manufacturer shall determine, for engine family, the mileage at which the engine-system combination is stabilized for emission-data testing. The manufacturer shall maintain, and provide to the Administrator if requested, a record of the rationale used in making this determination. The manufacturer may elect to accumulate 4,000 miles on each test vehicle within an engine family without making a determination. Any vehicle used to represent emission-data vehicle selections under § 86.090–24(b)(1) shall be equipped with an engine and emission control system that has accumulated at least the mileage determined under this paragraph. Fuel economy data generated from certification vehicles selected in accordance with § 86.090–24(b)(1) with engine-system combinations that have accumulated more than 10,000 kilometers (6,200 miles) shall be factored in accordance with § 600.006–82(c). Complete exhaust and evaporative (if required) emission tests shall be conducted for each emission-data vehicle selection under § 86.090–24(b)(1). The Administrator may determine under § 86.090–24(f) that no testing is required.

(B) Emission tests for emission-data vehicle(s) selected for testing under § 86.090–24(b)(1) (v) or (viii) shall be conducted at the mileage at which the engine system combination is stabilized for emission testing under high-altitude conditions.

(C) Exhaust and evaporative emissions tests for emission-data vehicle(s) selected for testing under § 86.090–24(b)(1) (i), (ii), (iii), (iv), or (vii)(B) shall be conducted at the mileage at which the engine-system combination is stabilized for emission testing under low-altitude conditions.

(D) For each engine family, the manufacturer will either select one vehicle previously selected under § 86.090–24(b)(1) (i) through (iv) to be tested

under high-altitude conditions or provide a statement in accordance with § 86.090–24(b)(1)(v). Vehicles shall meet emission standards under both low- and high-altitude conditions without manual adjustments or modifications. In addition, any emission control device used to conform with the emission standards under high-altitude conditions shall initially actuate (automatically) no higher than 4,000 feet above sea level.

(ii) *Diesel.* (A) The manufacturer shall determine, for each engine family, the mileage at which the engine-system combination is stabilized for emission-data testing. The manufacturer shall maintain, and provide to the Administrator if requested, a record of the rationale used in making this determination. The manufacturer may elect to accumulate 4,000 miles on each test vehicle within an engine family without making a determination. Any vehicle used to represent emission-data vehicle selections under § 86.090–24(b)(1) shall be equipped with an engine and emission control system that has accumulated at least the mileage determined under this paragraph. Fuel economy data generated from certification vehicles selected in accordance with § 86.090–24(b)(1) with engine-system combinations that have accumulated more than 10,000 kilometers (6,200 miles) shall be factored in accordance with § 600.006–82(c). Complete exhaust emission tests shall be conducted for each emission-data vehicle selection under § 86.090–24(b)(1). The Administrator may determine under § 86.090–24(f) that no testing is required.

(B) Emission tests for emission-data vehicle(s) selected for testing under § 86.090–24(b)(1)(v) shall be conducted at the mileage at which the engine-system combination is stabilized for emission testing under low-altitude conditions.

(C) Exhaust and evaporative emission tests for emission-data vehicle(s) selected for testing under § 86.090–24(b)(1)(i) through (iv) shall be conducted at the mileage at which the engine-system combination is stabilized for emission testing under low-altitude conditions.

(D) For each engine family, the manufacturer will either select one vehicle previously selected under § 86.090–24(b)(1) (i) through (iv) to be tested under high-altitude conditions or provide a statement in accordance with § 86.090–24(b)(1)(v). Vehicles shall meet emission standards under both low- and high-altitude conditions without manual adjustments or modifications. In addition, any emission control device used to conform with the emission standards under high-altitude conditions shall initially actuate (automatically) no higher than 4,000 feet above sea level.

(4)(i) *Durability data vehicles.* (A) Unless otherwise provided for in § 86.090–23(a), each durability-data vehicle shall be driven, with all emission control systems installed and operating, for 50,000 miles or such lesser distance as the Administrator may agree to as meeting the objective of this procedure.

(B) Complete exhaust emission tests shall be made at test point mileage intervals that the manufacturer determines.

(C) At a minimum, two complete exhaust emission tests shall be made. The first test shall be made at a distance not greater than 6,250 miles. The last shall be made at 50,000 miles.

(D) The mileage interval between test points must be of equal length except for the interval between zero miles and the first test, and any interval before or after testing conducted in conjunction with vehicle maintenance as specified in § 86.090–25(g)(2).

(ii) The manufacturer may, at its option, alter the durability-data vehicle at the selected test point to represent emission-data vehicle(s) within the same engine/system combination and perform emission tests on the altered vehicle. Upon completion of emission testing, the manufacturer may return the test vehicle to the durability-data vehicle configuration prior to the continuation of mileage accumulation.

(5)(i) All tests required by this subpart on emission-data vehicles shall be conducted at a mileage equal to or greater than the mileage the manufacturer determines under paragraph (a)(3) of this section.

(ii) All tests required by this subpart on durability-data vehicles shall be

conducted within 250 miles of each of the test points.

(6)(i)(A) The manufacturer may conduct multiple tests at any test point at which the data are intended to be used in the deterioration factor. At each test point where multiple tests are conducted, the test results from all valid tests shall be averaged to determine the data point to be used in the deterioration factor calculation, except under paragraph (a)(6)(i)(B) of this section. The test results from emission tests performed before maintenance affecting emissions shall not be averaged with test results after the maintenance.

(B) The manufacturer is not required to average multiple tests if the manufacturer conducts no more than three tests at each test point and if the number of tests at each test point is equal. All test points must be treated the same for all exhaust pollutants.

(ii) The results of all emission testing shall be supplied to the Administrator. The manufacturer shall furnish to the Administrator explanation for voiding any test. The Administrator will determine if voiding the test was appropriate based upon the explanation given by the manufacturer for the voided test. Tests between test points may be conducted as required by the Administrator. Data from all tests (including voided tests) may be submitted weekly to the Administrator, but shall be air posted or delivered to the Administrator within 7 days after completion of the test. In addition, all test data shall be compiled and provided to the Administrator in accordance with § 86.090–23. Where the Administrator conducts a test on a durability-data vehicle at a prescribed test point, the results of that test will be used in the calculation of the deterioration factor.

(iii) The results of all emission tests shall be rounded, in accordance with ASTM E 29–67, to the number of decimal places contained in the applicable emission standard expressed to one additional significant figure.

(7) Whenever a manufacturer intends to operate and test a vehicle which may be used for emission or durability data, the manufacturer shall retain in its records all information concerning all emissions tests and maintenance, including vehicle alterations to represent other vehicle selections. For emission-data vehicles, this information shall be submitted, including the vehicle description and specification information required by the Administrator, to the Administrator following the emission-data test. For durability-data vehicles, this information shall be submitted following the 5,000-mile test.

(8) Once a manufacturer submits the information required in paragraphs (a)(7) of this section for a durability-data vehicle, the manufacturer shall continue to run the vehicle to 50,000 miles, and the data from the vehicle will be used in the calculations under § 86.090–28. Discontinuation of a durability-data vehicle shall be allowed only with the consent of the Administrator.

(9)(i) The Administrator may elect to operate and test any test vehicle during all or any part of the mileage accumulation and testing procedure. In such cases, the manufacturer shall provide the vehicle(s) to the Administrator with all information necessary to conduct this testing.

(ii) The test procedures in §§ 86.106 through 86.145 will be followed by the Administrator. The Administrator will test the vehicles at each test point. Maintenance may be performed by the manufacturer under such conditions as the Administrator may prescribe.

(iii) The data developed by the Administrator for the engine-system combination shall be combined with any applicable data supplied by the manufacturer on other vehicles of that combination to determine the applicable deterioration factors for the combination. In the case of a significant discrepancy between data developed by the Administrator and that submitted by the manufacturer, the Administrator's data shall be used in the determination of deterioration factors.

(10) Emission testing of any type with respect to any certification vehicle other than that specified in this part is not allowed except as such testing may be specifically authorized by the Administrator.

(11) This section does not apply to testing conducted to meet the requirements of § 86.090–23(b)(2).

(b)(1) Paragraph (b) of this section applies to light-duty trucks.

(2) There are three types of mileage or service accumulation applicable to light-duty trucks:

(i) Mileage or service accumulation on vehicles, engines, subsystems, or components selected by the manufacturer under § 86.090–24(c)(2)(i). The manufacturer determines the form and extent of this mileage or service accumulation, consistent with good engineering practice, and describes it in the application for certification.

(ii) Mileage accumulation of the duration selected by the manufacturer on emission-data vehicles selected under § 86.090–24(b)(1). The procedure for mileage accumulation will be the Durability Driving Schedule as specified in appendix IV to this part. A modified procedure may also be used if approved in advance by the Administrator. Except with the advance approval of the Administrator, all vehicles will accumulate mileage at a measured curb weight which is within 100 pounds of the estimated curb weight. If the loaded vehicle weight is within 100 pounds of being included in the next higher inertia weight class as specified in § 86.129, the manufacturer may elect to conduct the respective emission tests at the test weight corresponding to the higher loaded vehicle weight.

(iii) Service or mileage accumulation which may be part of the test procedures used by the manufacturer to establish evaporative emission deterioration factors.

(3) Exhaust emission deterioration factors will be determined on the basis of the mileage or service accumulation described in paragraph (b)(2)(i) of this section and related testing, according to the manufacturer's procedures.

(4) Each emission-data vehicle shall be operated and tested as follows:

(i) *Otto-cycle.* (A) The manufacturer shall determine, for each engine family, the mileage at which the engine-system combination is stabilized for emission-data testing. The manufacturer shall maintain, and provide to the Administrator if requested, a record of the rationale used in making this determination. The manufacturer may elect to accumulate 4,000 miles on each test vehicle within an engine family without making a determination. Any vehicle used to represent emission-data vehicle selections under § 86.090–24(b)(1) shall be equipped with an engine and emission control system that has accumulated at least the mileage determined under this paragraph. Fuel economy data generated from certification vehicles selected in accordance with § 86.090–24(b)(1) with engine-system combinations that have accumulated more than 10,000 kilometers (6,200 miles) shall be factored in accordance with § 600.006–82(c). Complete exhaust emission tests shall be conducted for each emission-data vehicle selection under § 86.090–24(b)(1). The Administrator may determine under § 86.090–24(f) that no testing is required.

(B) Emission tests for emission-data vehicle(s) selected for testing under § 86.090–24(b)(1) (v) or (viii) shall be conducted at the mileage at which the engine-system combination is stabilized for emission testing or at 6,436 kilometers (4,000-miles) under high-altitude conditions.

(C) Exhaust and evaporative emission tests for emission-data vehicle(s) selected for testing under § 86.090–24(b)(1) (ii), (iii), (iv)(A), or (vii)(B) shall be conducted at the mileage at which the engine-system combination is stabilized for emission testing or at the 6,436-kilometer (4,000-mile) test point under low-altitude conditions.

(D) If the manufacturer recommends adjustments or modifications in order to conform to emission standards at high altitude, such adjustments or modifications shall be made to the test vehicle selected under § 86.090–24(b)(1) (v) and (viii) (in accordance with the instructions to be provided to the ultimate purchaser) before being tested under high-altitude conditions.

(ii) *Diesel.* (A) The manufacturer shall determine, for each engine family, the mileage at which the engine-system combination is stabilized for emission-data testing. The manufacturer shall maintain, and provide to the Administrator if requested, a record of the rationale used in making this determination. The manufacturer may elect to accumulate 4,000 miles on each test vehicle within an engine family without making a determination. Any vehicle used to represent emission-data vehicle

selections under § 86.090–24(b)(1) shall be equipped with an engine and emission control system that has accumulated at least the mileage determined under this paragraph. Fuel economy data generated from certification vehicles selected in accordance with § 86.090–24(b)(1) with engine-system combinations that have accumulated more than 10,000 kilometers (6,200 miles) shall be factored in accordance with § 600.006–82(c). Complete exhaust emission tests shall be conducted for each emission-data vehicle selection under § 86.090–24(b)(1). The Administrator may determine under § 86.090–24(f) that no testing is required.

(B) Emission tests for emission-data vehicle(s) selected for testing under § 86.090–24(b)(1) (v) or (viii) shall be conducted at the mileage at which the engine-system combination is stabilized for emission testing or at 6,436-kilometer (4,000-miles) under high-altitude conditions.

(C) Exhaust and evaporative emission tests for emission-data vehicle(s) selected for testing under § 86.090–24(b)(1) (ii), (iii), (iv)(A), or (vii)(B) shall be conducted at the mileage at which the engine-system combination is stabilized for emission testing or at the 6,436-kilometer (4,000-mile) test point under low-altitude conditions.

(D) If the manufacturer recommends adjustments or modifications in order to conform to emission standards at high altitude, such adjustments or modifications shall be made to the test vehicle selected under § 86.090–24(b)(1) (v) and (viii) (in accordance with the instructions to be provided to the ultimate purchaser) before being tested under high-altitude conditions.

(ii) *Diesel.* (A) The manufacturer shall determine, for each engine family, the mileage at which the engine-system combination is stabilized for emission-data testing. The manufacturer shall maintain, and provide to the Administrator if requested, a record of the rationale used in making this determination. The manufacturer may elect to accumulate 4,000 miles on each test vehicle within an engine family without making a determination. Any vehicle used to represent emission-data vehicle selections under § 86.090–24(b)(1) shall be equipped with an engine and emission control system that has accumulated at least the mileage determined under this paragraph. Fuel economy data generated from certification vehicles selection in accordance with § 86.090–24(b)(1) with engine-system combinations that have accumulated more than 10,000 kilometers (6,200 miles) shall be factored in accordance with § 600.006–82(c). Complete exhaust emission tests shall be conducted for each emission-data vehicle selection under § 86.090–24(b)(1). The Administrator may determine under § 86.090–24(f) that no testing is required.

(B) Emission tests for emission-data vehicle(s) selected for testing under § 86.090–24(b)(1)(v) shall be conducted at the mileage at which the engine-system combination is stabilized for emission testing or at the 6,436-kilometer (4,000-mile) test point under low-altitude conditions.

(C) Exhaust and evaporative emission tests for emission-data vehicle(s) selected for testing under § 86.090–24(b)(1) (ii), (iii), and (iv) shall be conducted at the mileage at which the engine-system combination is stabilized for emission testing or at the 6,436-kilometer (4,000-mile) test point under low-altitude conditions.

(D) If the manufacturer recommends adjustments or modifications in order to conform to emission standards at high altitude, such adjustments or modifications shall be made to the test vehicle selected under § 86.090–24(b)(1) (v) and (viii) (in accordance with the instructions to be provided to the ultimate purchaser) before being tested under high-altitude conditions.

(iii) [Reserved]

(iv) All tests required by this subpart on emission-data vehicles shall be conducted at a mileage equal to or greater than the mileage the manufacturer determines under paragraph (b)(4) of this section.

(c)(1) Paragraph (c) of this section applies to heavy-duty engines.

(2) There are two types of service accumulation applicable to heavy-duty engines:

(i) Service accumulation on engines, subsystems, or components selected by the manufacturer under § 86.088–

24(c)(3)(i). The manufacturer determines the form and extent of this service accumulation, consistent with good engineering practice, and describes it in the application for certification.

(ii) Dynamometer service accumulation on emission-data engines selected under §86.090–24(b) (2) or (3). The manufacturer determines the engine operating schedule to be used for dynamometer service accumulation, consistent with good engineering practice. A single engine operating schedule shall be used for all engines in an engine family-control system combination. Operating schedules may be different for different combinations.

(3) Exhaust emission deterioration factors will be determined on the basis of the service accumulation described in paragraph (b)(2)(i) of this section and related testing, according to the manufacturer's procedures.

(4) The manufacturer shall determine, for each engine family, the number of hours at which the engine system combination is stabilized for emission-data testing. The manufacturer shall maintain, and provide to the Administrator if requested a record of the rationale used in making this determination. The manufacturer may elect to accumulate 125 hours on each test engine within an engine family without making a determination. Any engine used to represent emission-data engine selections under §86.090–24(b)(2) shall be equipped with an engine system combination that has accumulated at least the number of hours determined under this paragraph. Complete exhaust emission tests shall be conducted for each emission-data engine selection under §86.090–24(b)(2). Evaporative emission controls need not be connected provided normal operating conditions are maintained in the engine induction system. The Administrator may determine under §86.090–24(f) that no testing is required.

(d)(1) Paragraph (d) of this section applies to both light-duty trucks and heavy-duty engines.

(2)(i) The results of all emission testing shall be supplied to the Administrator. The manufacturer shall furnish to the Administrator explanation for voiding any test. The Administrator will determine if voiding the test was appropriate based upon the explanation given by the manufacturer for the voided test. Tests between test points may be conducted as required by the Administrator. Data from all tests (including voided tests) may be submitted weekly to the Administrator, but shall be air posted or delivered to the Administrator within 7 days after completion of the tests. In addition, all test data shall be compiled and provided to the Administrator in accordance with §86.090–23. Where the Administrator conducts a test on a durability-data vehicle at a prescribed test point, the results of that test will be used in the calculation of the deterioration factor.

(ii) The results of all emission tests shall be recorded and reported to the Administrator. These test results shall be rounded, in accordance with ASTM E 29–67, to the number of decimal places contained in the applicable emission standard expressed to one additional significant figure.

(3) Whenever a manufacturer intends to operate and test a vehicle (or engine) which may be used for emission data, the manufacturer shall retain in its records all information concerning all emissions tests and maintenance, including vehicle (or engine) alterations to represent other vehicle (or engine) selections. This information shall be submitted, including the vehicle (or engine) description and specification information required by the Administrator, to the Administrator following the emission-data test.

(4)–(5) [Reserved]

(6) Emission testing of any type with respect to any certification vehicle or engine other than that specified in this subpart is not allowed except as such testing may be specifically authorized by the Administrator.

[54 FR 14478, Apr. 11, 1989]

§86.090–27 Special test procedures.

(a) The Administrator may, on the basis of written application by a manufacturer, prescribe test procedures, other than those set forth in this part, for any light-duty vehicle, light-duty truck, heavy-duty engine, or heavy-duty vehicle which the Administrator determines is not susceptible to satisfactory testing by the procedures set forth in this part.

(b) If the manufacturer does not submit a written application for use of special test procedures but the Administrator determines that a light-duty vehicle, light-duty truck, heavy-duty engine, or heavy-duty vehicle is not susceptible to satisfactory testing by the procedures set forth in this part, the Administrator shall notify the manufacturer in writing and set forth the reasons for such rejection in accordance with the provisions of § 86.090–22(c).

[54 FR 14481, Apr. 11, 1989]

§ 86.091–2 Definitions.

The definitions of § 86.090–2 remain effective. The definitions listed in this section apply beginning with the 1991 model year.

Urban bus means a heavy heavy-duty diesel-powered passenger-carrying vehicle with a load capacity of fifteen or more passengers and intended primarily for intra-city operation, *i.e.*, within the confines of a city or greater metropolitan area. Urban bus operation is characterized by short rides and frequent stops. To facilitate this type of operation, more than one set of quick-operating entrance and exit doors would normally be installed. Since fares are usually paid in cash or tokens rather than purchased in advance in the form of tickets, urban buses would normally have equipment installed for collection of fares. Urban buses are also typically characterized by the absence of equipment and facilities for long distance travel, *e.g.*, rest rooms, large luggage compartments, and facilities for stowing carry-on luggage. The useful life for urban buses is the same as the useful life for other heavy heavy-duty diesel engines.

[55 FR 30619, July 26, 1990]

§ 86.091–7 Maintenance of records; submittal of information; right of entry.

(a) The manufacturer of any new motor vehicle (or new motor vehicle engine) subject to any of the standards or procedures prescribed in this subpart shall establish, maintain and retain the following adequately organized and indexed records.

(1) *General records.* (i) The records required to be maintained by this paragraph shall consist of:

(A) Identification and description of all certification vehicles (or certification engines) for which testing is required under this subpart.

(B) A description of all emission control systems which are installed on or incorporated in each certification vehicle (or certification engine).

(C) A description of all procedures used to test each such certification vehicle (or certification engine).

(ii) A properly filed application for certification, following the format prescribed by the US EPA for the appropriate model year, fulfills each of the requirements of this paragraph (a)(1).

(2) *Individual records.* (i) A brief history of each motor vehicle (or motor vehicle engine) used for certification under this subpart including:

(A) In the case where a current production engine is modified for use in a certification vehicle (or as a certification engine), a description of the process by which the engine was selected and of the modifications made. In the case where the engine for a certification vehicle (or certification engine) is not derived from a current production engine, a general description of the buildup of the engine (*e.g.*, experimental heads were cast and machined according to supplied drawings, etc.). In both cases above, a description of the origin and selection process for carburetor, distributor, fuel system components, fuel injection components, emission control system components, smoke exhaust emission control system components, and exhaust aftertreatment devices as applicable, shall be included. The required descriptions shall specify the steps taken to assure that the certification vehicle (or certification engine) with respect to its engine, drivetrain, fuel system, emission control system components, exhaust aftertreatment devices, smoke exhaust emission control system components, vehicle weight or any other devices or components, as applicable, that can reasonably be expected to influence exhaust or evaporative emissions, as applicable, will be representative of production vehicles (or engines) and that either all components and/or

vehicles (or engine) construction processed, component inspection and selection techniques, and assembly techniques employed in constructing such vehicles (or engines) are reasonably likely to be implemented for production vehicles (or engines) or that they are as closely analogous as practicable to planned construction and assembly processed.

(B) A complete record of all emission tests performed (except tests performed by EPA directly), including test results, the date and purpose of each test, and the number of miles accumulated on the vehicle (or the number of hours accumulated on the engine).

(C) The date of each mileage (or service) accumulation run, listing the mileage (or number of operating hours) accumulated.

(D) [Reserved]

(E) A record and description of all maintenance and other servicing performed, giving the date of the maintenance or service and the reason for it.

(F) A record and description of each test performed to diagnose engine or emission control system performance, giving the date and time of the test and the reason for it.

(G) [Reserved]

(H) A brief description of any significant events affecting the vehicle (or engine) during any time in the period covered by the history not described by an entry under one of the previous headings including such extraordinary events as vehicle accidents (or accidents involving the engine) or dynamometer runaway.

(ii) Each such history shall be started on the date that the first of any of the selection or buildup activities in paragraph (a)(2)(i)(A) of this section occurred with respect to the certification vehicle (or engine) changes or additional work is done on it, and shall be kept in a designated location.

(3) All records, other than routine emission test records, required to be maintained under this subpart shall be retained by the manufacturer for a period of six (6) years after issuance of all certificates of conformity to which they relate. Routine emission test records shall be retained by the manufacturer for a period of one (1) year after issuance of all certificates of conformity to which they relate. Records may be retained as hard copy or reduced to microfilm, ADP diskettes, etc., depending on the record retention procedures of the manufacturer; *Provided,* That in every case all the information contained in the hard copy shall be retained.

(b) The manufacturer of any new motor vehicle (or new motor vehicle engine) subject to any of the standards prescribed in this subpart shall submit to the Administrator at the time of issuance by the manufacturer copies of all instructions or explanations regarding the use, repair, adjustment, maintenance, or testing of such vehicle (or engine) relevant to the control of crankcase, exhaust or evaporative emissions, as applicable, issued by the manufacturer for use by other manufacturers, assembly plants, distributors, dealers, and ultimate purchasers, *Provided,* That any material not translated into the English language need not be submitted unless specifically requested by the Administrator.

(c)(1) The manufacturer (or contractor for the manufacturer, if applicable) of any new vehicle or engine that is certified under averaging, trading, or banking programs (as applicable) shall establish, maintain, and retain the following adequately organized and indexed records for each such vehicle or heavy-duty engine produced:

(i) EPA engine family.

(ii) Vehicle (or engine) identification number.

(iii) Vehicle (or engine) model year and build date.

(iv) BHP rating (heavy-duty engines only).

(v) Purchaser and destination.

(vi) Assembly plant.

(2) The manufacturer (or contractor for the manufacturer, if applicable) of any new vehicle or engine family that is certified under averaging, trading, or banking programs (as applicable) shall establish, maintain, and retain the following adequately organized and indexed records for each such family:

(i) EPA engine family.

(ii) FEL.

(iii) BHP conversion factor and the transient test BHP for each configuration tested (heavy-duty engines only).

(iv) Useful life.

(v) Projected U.S. production volume for the model year.

(vi) Actual U.S. production volume for the model year.

(3) The manufacturer (or contractor for the manufacturer, if applicable) shall retain all records required to be maintained under this section for a period of six years from the due date for the end-of-model year averaging, trading, and banking reports. Records may be retained as hard copy or reduced to microfilm, ADP files, etc., depending on the manufacturer's record retention procedure; *Provided,* That in every case all the information contained in the hard copy is retained.

(4) Nothing in this section limits the Administrator's discretion in requiring the manufacturer to retain additional records or submit information not specifically required by this section.

(5) Pursuant to a request made by the Administrator, the manufacturer shall submit to him the information that is required to be retained.

(6) EPA may void *ab initio* a certificate of conformity for a vehicle or engine family for which the manufacturer fails to retain the records required in this section or to provide such information to the Administrator upon request.

(7) Any engine family using NCPs must comply with the provisions established in the NCP program provided by 40 CFR part 86, subpart L.

(8) Any manufacturer, producing an engine family participating in trading using reserved credits, shall maintain the following records on a quarterly basis for each engine family in the trading subclass:

(i) The engine family,

(ii) The averaging set,

(iii) The actual quarterly and cumulative U.S. production volumes,

(iv) The value required to calculate credits as given in § 86.091–15,

(v) The resulting type [NO_X or particulate] and number of credits generated/required,

(vi) How and where credit surpluses are dispersed, and

(vii) How and through what means credit deficits are met.

(d)(1) Any manufacturer who has applied for certification of a new motor vehicle (or new motor vehicle engine) subject to certification test under this subpart shall admit or cause to be admitted any EPA Enforcement Officer or any EPA authorized representative during operating hours on presentation of credentials to any of the following:

(i) Any facility where any such tests or any procedures or activities connected with such test are or were performed.

(ii) Any facility where any new motor vehicle (or new motor vehicle engine) which is being, was, or is to be tested is present.

(iii) Any facility where any construction process or assembly process used in the modification or build up of such a vehicle (or engine) into a certification vehicle (or certification engine) is taking place or has taken place.

(iv) Any facility where any record or other document relating to any of the above is located.

(v) Any facility where any record or other document relating to the information specified in paragraph (c) of this section is located.

(2) Upon admission to any facility referred to in paragraph (d)(1) of this section, any EPA Enforcement Officer or any EPA authorized representative shall be allowed:

(i) To inspect and monitor any part or aspect of such procedures, activities, and testing facilities, including, but not limited to, monitoring vehicle (or engine) preconditioning, emissions tests and mileage (or service) accumulation, maintenance, and vehicle soak and storage procedures (or engine storage procedures), and to verify correlation or calibration of test equipment;

(ii) To inspect and make copies of any such records, designs, or other documents, including those records specified in paragraph (c) of this section; and

(iii) To inspect and/or photograph any part or aspect of any such certification vehicle (or certification engine) and any components to be used in the construction thereof.

(3) In order to allow the Administrator to determine whether or not production motor vehicles (or production motor vehicle engines) conform to the conditions upon which a certificate

of conformity has been issued, or conform in all material respects to the design specifications which applied to those vehicles (or engines) described in the application for certification for which a certificate of conformity has been issued to standards prescribed under section 202 of the Act, any manufacturer shall admit any EPA Enforcement Officer or any EPA authorized representative on presentation of credentials to both:

(i) Any facility where any document, design, or procedure relating to the translation of the design and construction of engines and emission related components described in the application for certification or used for certification testing into production vehicles (or production engines) is located or carried on;

(ii) Any facility where any motor vehicles (or motor vehicle engines) to be introduced into commerce are manufactured or assembled; and

(iii) Any facility where records specified in paragraph (c) of this section are located.

(4) On admission to any such facility referred to in paragraph (d)(4) of this section, any EPA Enforcement Officer or any EPA authorized representative shall be allowed:

(i) To inspect and monitor any aspects of such manufacture or assembly and other procedures;

(ii) To inspect and make copies of any such records, documents or designs;

(iii) To inspect and photograph any part or aspect of any such new motor vehicles (or new motor vehicle engines) and any component used in the assembly thereof that are reasonably related to the purpose of his entry; and

(iv) To inspect and make copies of any records and documents specified in paragraph (c) of this section.

(5) Any EPA Enforcement Officer or EPA authorized representative shall be furnished by those in charge of a facility being inspected with such reasonable assistance as he may request to help him discharge any function listed in this paragraph. Each applicant for or recipient of certification is required to cause those in charge of a facility operated for its benefit to furnish such reasonable assistance without charge to EPA whether or not the applicant controls the facility.

(6) The duty to admit or cause to be admitted any EPA Enforcement Officer or EPA authorized representative applies whether or not the applicant owns or controls the facility in question and applies both to domestic and to foreign manufacturers and facilities. EPA will not attempt to make any inspections which it has been informed that local law forbids. However, if local law makes it impossible to do what is necessary to insure the accuracy of data generated at a facility, no informed judgment that a vehicle or engine is certifiable or is covered by a certificate can properly be based on those data. It is the responsibility of the manufacturer to locate its testing and manufacturing facilities in jurisdictions where this situation will not arise.

(7) For purposes of this paragraph:

(i) *Presentation of credentials* shall mean display of the document designating a person as an EPA Enforcement Officer or EPA authorized representative.

(ii) Where vehicle, component, or engine storage areas or facilities are concerned, *operating hours* shall mean all times during which personnel other than custodial personnel are at work in the vicinity of the area or facility and have access to it.

(iii) Where facilities or areas other than those covered by paragraph (d)(7)(ii) of this section are concerned, *operating hours* shall mean all times during which an assembly line is in operation or all times during which testing, maintenance, mileage (or service) accumulation, production or compilation of records, or any other procedure or activity related to certification testing, to translation of designs from the test stage to the production stage, or to vehicle (or engine) manufacture or assembly is being carried out in a facility.

(iv) *Reasonable assistance* includes, but is not limited to, clerical, copying, interpretation and translation services, the making available on request of personnel of the facility being inspected during their working hours to inform the EPA Enforcement Officer or EPA authorized representative of how the facility operates and to answer his

questions, and the performance on request of emissions tests on any vehicle (or engine) which is being, has been, or will be used for certification testing. Such tests shall be nondestructive, but may require appropriate mileage (or service) accumulation. A manufacturer may be compelled to cause the personal appearance of any employee at such a facility before an EPA Enforcement Officer or EPA authorized representative by written request for his appearance, signed by the Assistant Administrator for Air and Radiation, served on the manufacturer. Any such employee who has been instructed by the manufacturer to appear will be entitled to be accompanied, represented, and advised by counsel.

(v) Any entry without 24 hour prior written or oral notification to the affected manufacturer shall be authorized in writing by the Assistant Administrator for Air and Radiation.

(8) EPA may void *ab initio* a certificate of conformity for vehicle or engine families introduced into commerce if the manufacturer (or contractor for the manufacturer, if applicable) fails to comply with any provision of this section.

(e) EPA Enforcement Officers or EPA authorized representatives are authorized to seek a warrant or court order authorizing the EPA Enforcement Officers or EPA authorized representatives to conduct activities related to entry and access as authorized in this section, as appropriate, to execute the functions specified in this section. EPA Enforcement Officers or EPA authorized representatives may proceed ex parte to obtain a warrant whether or not the Enforcement Officers first attempted to seek permission of the manufacturer or the party in charge of the facilities in question to conduct activities related to entry and access as authorized in this section.

(f) A manufacturer shall permit EPA Enforcement Officers or EPA authorized representatives who present a warrant or court order as described in paragraph (e) of this section to conduct activities related to entry and access as authorized in this section and as described in the warrant or court order. The manufacturer shall cause those in charge of its facility or facility operated for its benefit to permit EPA Enforcement Officers or EPA authorized representatives to conduct activities related to entry and access as authorized in this section pursuant to a warrant or court order whether or not the manufacturer controls the facility. In the absence of such a warrant or court order, EPA Enforcement Officers or EPA authorized representatives may conduct activities related to entry and access as authorized in this section only upon the consent of the manufacturer or the party in charge of the facilities in question.

(g) It is not a violation of this part or the Clean Air Act for any person to refuse to permit EPA Enforcement Officers or EPA authorized representatives to conduct activities related to entry and access as authorized in this section without a warrant or court order.

[55 FR 30619, July 26, 1990]

§ 86.091–9 Emission standards for 1991 and later model year light-duty trucks.

(a)(1) The standards set forth in paragraphs (a) through (c) of this section shall apply to light-duty trucks sold for principal use at other than a designated high-altitude location. Exhaust emissions from 1991 and later model year light-duty trucks shall not exceed:

(i)(A) *Hydrocarbons (for petroleum-fueled Otto-cycle and diesel light-duty trucks).* 0.80 gram per vehicle mile (0.50 gram per vehicle kilometer).

(B) *Total Hydrocarbon Equivalent (for methanol-fueled Otto-cycle and diesel light-duty trucks).* 0.80 gram per vehicle mile (0.50 gram per vehicle kilometer).

(ii) *Carbon monoxide.*

(A) 10 grams per vehicle mile (6.2 grams per vehicle kilometer).

(B) 0.50 percent of exhaust gas flow at curb idle (for Otto-cycle and methanol-fueled diesel light-duty trucks only).

(iii) *Oxides of nitrogen.*

(A) For light-duty trucks up to and including 3,750 lbs loaded vehicle weight, 1.2 grams per vehicle mile (0.75 gram per vehicle kilometer).

(B) For light-duty trucks greater loaded vehicle weight, 1.7 grams per vehicle mile (1.1 grams per vehicle kilometer).

(C) A manufacturer may elect to include any light-duty truck engine families in the NO_X averaging program, provided that it does not elect to pay an NCP for noncompliance with any emission standard applicable to that light-duty truck family. Trucks produced for sale in California or in designated high-altitude areas may be averaged only within each of those areas. Petroleum-fueled and methanol-fueled engine families may not be averaged together. Otto-cycle and diesel engine families may not be averaged together. If the manufacturer elects to participate in the NO_X averaging program, individual family NO_X emission limits may not exceed 2.3 grams per mile. If the manufacturer elects to average together NO_X emissions of light-duty trucks subject to the standards of paragraphs (a)(1)(iii)(A) and (a)(1)(iii)(B) of this section, its composite NO_X standard applies to the combined fleets of light-duty trucks up to and including, and over, 3750 lbs loaded vehicle weight included in the average, and is calculated as defined in § 86.088–2.

(iv) *Particulate (for diesel light-duty trucks only).*

(A) For light-duty trucks up to and including 3,750 lbs loaded vehicle weight, 0.26 gram per vehicle mile (0.16 gram per vehicle kilometer).

(B) For light-duty trucks 3,751 lbs and greater loaded vehicle weight, 0.13 gram per vehicle mile (0.08 gram per vehicle kilometer).

(C) A manufacturer may elect to include any diesel light-duty truck engine families in the appropriate particulate averaging program (petroleum and methanol), provided that it does not elect to pay an NCP for noncompliance with any emission standard applicable to that light-duty truck family. Trucks produced for sale in California or in designated high-altitude areas may be averaged only within each of those areas, and light-duty trucks subject to the standard of paragraph (a)(1)(iv)(B) of this section may be averaged only with other light-duty trucks subject to the standard of paragraph (a)(1)(iv)(B) of this section. Averaging is not permitted between fuel types. If the manufacturer elects to average both light-duty trucks subject to the standards of paragraphs (a)(1)(iv)(A) of this section and light-duty vehicles together in the appropriate particulate averaging program, its composite particulate standard applies to the combined set of light-duty vehicles and light-duty trucks that are included in the average and is calculated as defined in § 86.088–2.

(2) The standards set forth in paragraphs (a)(1)(i), (a)(1)(ii)(A), (a)(1)(iii), and (a)(1)(iv) of this section refer to the exhaust emitted over a driving schedule as set forth in subpart B of this part and measured and calculated in accordance with those procedures. The standard set forth in paragraph (a)(1)(ii)(B) of this section refers to the exhaust emitted at curb idle and measured and calculated in accordance with the procedures set forth in subpart P of this part.

(b) Fuel evaporative emissions from 1991 and later model year light-duty trucks shall not exceed (compliance with these standards is optional for 1991 model year methanol-fueled vehicles):

(1) *Hydrocarbons (for gasoline-fueled light-duty trucks).* 2.0 grams per test.

(2) *Total Hydrocarbon Equivalent (for methanol-fueled light-duty trucks).* 2.0 grams per test.

(3) The standards set forth in paragraphs (b) (1) and (2) of this section refer to a composite sample of the fuel evaporative emissions collected under the conditions set forth in subpart B of this part and measured in accordance with those procedures.

(c) No crankcase emissions shall be discharged into the ambient atmosphere from any 1991 and later model year light-duty truck.

(d)(1) Model year 1991 and later light-duty trucks sold for principal use at a designated high-altitude location shall be capable of meeting the following exhaust emission standards when tested under high-altitude conditions:

(i)(A) *Hydrocarbons (for petroleum-fueled Otto-cycle and diesel light-duty trucks).* 1.0 grams per vehicle mile (0.62 grams per vehicle kilometer).

(B) *Total Hydrocarbon Equivalent (for methanol-fueled Otto-cycle and diesel light-duty trucks).* 1.0 gram per vehicle mile (0.62 gram per vehicle kilometer).

(ii) *Carbon Monoxide.* (A) 14 grams per vehicle mile (8.7 grams per vehicle kilometer).

(B) 0.50 percent of exhaust gas flow at curb idle (for Otto-cycle and methanol-fueled diesel light duty trucks only).

(iii) *Oxides of Nitrogen.* (A) For light-duty trucks up to and including 3,750 lbs loaded vehicle weight, 1.2 grams per vehicle mile (0.75 grams per vehicle kilometer).

(B) For light-duty trucks 3,751 lbs and greater loaded vehicle weight, 1.7 grams per vehicle mile (1.1 grams per vehicle kilometer).

(iv) *Particulate (for diesel light-duty trucks only).* (A) For light-duty trucks up to and including 3,750 lbs loaded vehicle weight, 0.26 gram per vehicle mile (0.16 gram per vehicle kilometer).

(B) For light-duty trucks 3,751 lbs and greater loaded vehicle weight, 0.13 gram per vehicle mile (0.08 gram per vehicle kilometer).

(2) The standards set forth in paragraphs (d)(1)(i), (d)(1)(ii)(A), (d)(1)(iii), and (d)(1)(iv) of this section refer to the exhaust emitted over a driving schedule as set forth in subpart B of this part and measured and calculated in accordance with those procedures. The standard set forth in paragraph (d)(1)(ii)(B) of this section refers to the exhaust emitted at curb idle and measured and calculated in accordance with the procedures set forth in subpart P of this part.

(e) Fuel evaporative emissions from 1991 and later model year light-duty trucks sold for principal use at a designated high-altitude location, when tested under high-altitude conditions, shall not exceed:

(1) *Hydrocarbons (for gasoline-fueled light-duty trucks).* 2.6 grams per test.

(2) *Total Hydrocarbon Equivalent (for methanol-fueled light-duty trucks).* 2.6 grams per test.

(3) The standards set forth in paragraphs (e) (1) and (2) of this section refer to a composite sample of the fuel evaporative emissions collected under the conditions set forth in subpart B of this part and measured in accordance with those procedures.

(f) No crankcase emissions shall be discharged into the ambient atmosphere from any 1991 and later model year light-duty trucks sold for principal use at a designated high-altitude location.

(g)(1) Any light-duty truck that a manufacturer wishes to certify for sale at low altitude must be capable of meeting high-altitude emission standards (specified in paragraphs (d) through (f) of this section). The manufacturer may specify vehicle adjustments or modifications to allow the vehicle to meet high-altitude standards but these adjustments or modifications may not alter the vehicle's basic engine, inertia weight class, transmission configuration, and axle ratio.

(i) A manufacturer may certify unique configurations to meet the high-altitude standards but is not required to certify these vehicle configurations to meet the low-altitude standards.

(ii) Any adjustments or modifications that are recommended to be performed on vehicles to satisfy the requirements of paragraph (g)(1) of this section:

(A) Shall be capable of being effectively performed by commercial repair facilities, and

(B) Must be included in the manufacturer's application for certification.

(2) The manufacturer may exempt 1991 and later model year vehicles from compliance with the high-altitude emission standards set forth in paragraphs (d) and (e) of this section if the vehicles are not intended for sale at high altitude and if the following requirements are met. A vehicle configuration shall only be considered eligible for exemption if the requirements of either paragraph (g)(2) (i), (ii), (iii), or (iv) of this section are met.

(i) Its design parameters (displacement-to-weight ratio (D/W) and engine speed-to-vehicle-speed ratio (N/V)) fall within the exempted range for that manufacturer for that year. The exempted range is determined according to the following procedure:

(A) The manufacturer shall graphically display the D/W and N/V data of all vehicle configurations it will offer for the model year in question. The axis of the abscissa shall be D/W (where (D) is the engine displacement expressed in cubic centimeters and (W) is the gross vehicle weight (GVW) expressed in pounds), and the axis of the ordinate shall be N/V (where (N) is the

crankshaft speed expressed in revolutions per minute and (V) is the vehicle speed expressed in miles per hour). At the manufacturer's option, either the 1:1 transmission gear ratio or the lowest numerical gear ratio available in the transmission will be used to determine N/V. The gear selection must be the same for all N/V data points on the manufacturer's graph. For each transmission/axle ratio combination, only the lowest N/V value shall be used in the graphical display.

(B) The product line is then defined by the equation, $N/V = C(D/W)^{-0.9}$ where the constant, C, is determined by the requirement that all the vehicle data points either fall on the line or lie to the upper right of the line as displayed on the graphs.

(C) The exemption line is then defined by the equation, $N/V = C(0.84\ D/W)^{-0.9}$ where the constant, C, is the same as that found in paragraph (g)(2)(i)(B) of this section.

(D) The exempted range includes all values of N/V and D/W which simultaneously fall to the lower left of the exemption line as drawn on the graph.

(ii) Its design parameters fall within the alternate exempted range for that manufacturer that year. The alternate exempted range is determined by substituting rated horsepower (hp) for displacement (D) in the exemption procedure described in paragraph (g)(2)(i) of this section and by using the product line $N/V = C(hp/W)^{-0.9}$.

(A) Rated horsepower shall be determined by using the Society of Automotive Engineers Test Procedure J 1349, or any subsequent version of that test procedure. Any of the horsepower determinants within that test procedure may be used, as long as it is used consistently throughout the manufacturer's product line in any model year.

(B) No exemptions will be allowed under paragraph (g)(2)(ii) of this section to any manufacturer that has exempted vehicle configurations as set forth in paragraph (g)(2)(i) of this section.

(iii) Its acceleration time (the time it takes a vehicle to accelerate from 0 to a speed not less than 40 miles per hour and not greater than 50 miles per hour) under high-altitude conditions is greater than the largest acceleration time under low-altitude conditions for that manufacturer for that year. The procedure to be followed in making this determination is:

(A) The manufacturer shall list the vehicle configuration and acceleration time under low-altitude conditions of that vehicle configuration which has the highest acceleration time under low-altitude conditions of all the vehicle configurations it will offer for the model year in question. The manufacturer shall also submit a description of the methodology used to make this determination.

(B) The manufacturer shall then list the vehicle configurations and acceleration times under high-altitude conditions of all those vehicles configurations which have higher acceleration times under high-altitude conditions than the highest acceleration time at low altitude identified in paragraph (g)(2)(iii)(A) of this section.

(iv) In lieu of performing the test procedure of paragraph (g)(2)(iii) of this section, its acceleration time can be estimated based on the manufacturer's engineering evaluation, in accordance with good engineering practice, to meet the exemption criteria of paragraph (g)(2)(iii) of this section.

(3) The sale of a vehicle for principal use at a designated high-altitude location that has been exempted as set forth in paragraph (g)(2) of this section will be considered a violation of section 203(a)(1) of the Clean Air Act.

[53 FR 43876, Oct. 31, 1988, as amended at 54 FR 14612, Apr. 11, 1989; 55 FR 46627, Nov. 5, 1990]

§ 86.091–10 Emission standards for 1991 and later model year Otto-cycle heavy-duty engines and vehicles.

(a)(1) Exhaust emissions from new 1991 and later model year Otto-cycle heavy-duty engines shall not exceed (compliance with these standards is optional through the 1996 model year natural gas- and liquefied petroleum gas-fueled heavy-duty engines):

(i) For Otto-cycle heavy-duty engines fueled with either gasoline or liquefied petroleum gas, and intended for use in all vehicles except as provided in paragraph (a)(3) of this paragraph.

(A) *Hydrocarbons.* 1.1 grams per brake horsepower-hour (0.41 gram per megajoule), as measured under transient operating conditions.

(B) *Carbon monoxide.* (*1*) 14.4 grams per brake horsepower-hour (5.36 grams per megajoule), as measured under transient operating conditions.

(*2*) *For Otto-cycle heavy-duty engines fueled with either gasoline or liquefied petroleum gas and utilizing aftertreatment technology.* 0.50 percent of exhaust gas flow at curb idle.

(C) *Oxides of nitrogen.* (*1*) 5.0 grams per brake horsepower-hour (1.9 grams per megajoule), as measured under transient operating conditions.

(*2*) A manufacturer may elect to include any or all of its gasoline-fueled Otto-cycle heavy duty engine families in any or all of the NO_X averaging, trading, or banking programs for heavy-duty engines, within the restrictions described in § 86.091–15. If the manufacturer elects to include engine families in any of these programs, the NO_X FELs may not exceed 6.0 grams per brake horsepower-hour (2.2 grams per megajoule). This ceiling value applies whether credits for the family are derived from averaging, trading, or banking programs.

(*3*) A manufacturer may elect to include any or all of its liquefied petroleum gas-fueled Otto-cycle heavy-duty engine families in any or all of the NO_X averaging, trading, or banking programs for heavy-duty engines, within the restrictions described in § 86.091–15. If the manufacturer elects to include engine families in any of these programs, the NO_X FELs may not exceed 6.0 grams per brake horsepower-hour (2.2 grams per megajoule). This ceiling value applies whether credits for the family are derived from averaging, trading or banking programs.

(ii) For Otto-cycle heavy-duty engines fueled with either gasoline or liquefied petroleum gas, and intended for use only in vehicles with a Gross Vehicle Weight Rating of greater than 14,000 lbs.

(A) *Hydrocarbons.* 1.9 grams per brake horsepower-hour (0.71 gram per megajoule), as measured under transient operating conditions.

(B) *Carbon Monoxide.* (*1*) 37.1 grams per brake horsepower-hour (13.8 grams per megajoule), as measured under transient operating conditions.

(*2*) *For Otto-cycle heavy-duty engines fueled with either gasoline or liquefied petroleum gas and utilizing aftertreatment technology.* 0.50 percent of exhaust gas flow at curb idle.

(C) *Oxides of nitrogen.* (*1*) 5.0 grams per brake horsepower-hour (1.9 grams per megajoule), as measured under transient operating conditions.

(*2*) A manufacturer may elect to include any or all of its gasoline-fueled Otto-cycle heavy-duty engine families in any or all of the NO_X averaging, trading, or banking programs for heavy-duty engines, within the restrictions described in § 86.091–15. If the manufacturer elects to include engine families in any of these programs, the NO_X FELs may not exceed 6.0 grams per brake horsepower-hour (2.2 grams per megajoule). This ceiling value applies whether credits for the family are derived from averaging, trading or banking programs.

(*3*) A manufacturer may elect to include any or all of its liquefied petroleum gas-fueled Otto-cycle heavy-duty engine families in any or all of the NO_X averaging, trading or banking programs for heavy-duty engines, within the restrictions described in § 86.091–15. If the manufacturer elects to include engine families in any of these programs, the NO_X FELs may not exceed 6.0 grams per brake horsepower-hour (2.2 grams per megajoule). This ceiling value applies whether credits for the family are derived from averaging, trading or banking programs.

(iii) For *methanol-fueled Otto-cycle heavy-duty engines* intended for use in all vehicles, except as provided in paragraph (a)(3) of this section.

(A) *Total Hydrocarbon Equivalent.* 1.1 gram per brake horsepower-hour (0.41 gram per megajoule), as measured under transient operating conditions.

(B) *Carbon monoxide.* (*1*) 14.4 grams per brake horsepower-hour (5.36 grams per megajoule), as measured under transient operating conditions.

(*2*) 0.50 percent of exhaust gas flow at curb idle.

(C) *Oxides of nitrogen.* (*1*) 5.0 grams per brake horsepower-hour (1.9 grams per megajoule), as measured under transient operating conditions.

(*2*) A manufacturer may elect to include any or all of its methanol-fueled Otto-cycle heavy-duty engine families in any or all of the NO_X averaging, trading, or banking programs for heavy-duty engines, within the restrictions described in § 86.091–15. If the manufacturer elects to include engine families in any of these programs, the NO_X FELs may not exceed 6.0 grams per brake horsepower-hour (2.2 grams per megajoule). This ceiling value applies whether credits for the family are derived from averaging, trading or banking programs.

(iv) For *methanol-fueled Otto-cycle heavy-duty engines* intended for use only in vehicles with a Gross Vehicle Weight Rating of greater than 14,000 lbs.

(A) *Total Hydrocarbon Equivalent.* 1.9 grams per brake horsepower-hour (0.71 gram per megajoule), as measured under transient operating conditions.

(B) *Carbon monoxide.* (*1*) 37.1 grams per brake horsepower-hour (13.8 grams per megajoule), as measured under transient operating conditions.

(*2*) 0.50 percent of exhaust gas flow at curb idle.

(C) *Oxides of nitrogen.* (*1*) 5.0 grams per brake horsepower-hour (1.9 grams per megajoule), as measured under transient operating conditions.

(*2*) A manufacturer may elect to include any or all of its methanol-fueled Otto-cycle heavy-duty engine families in any or all of the NO_X averaging, trading, or banking programs for heavy-duty engines, within the restrictions described in § 86.091–15. If the manufacturer elects to include engine families in any of these programs, the NO_X FELs may not exceed 6.0 grams per brake horsepower-hour (2.2 grams per megajoule). This ceiling value applies whether credits for the family are derived from averaging, trading or banking programs.

(v) For natural gas-fueled Otto-cycle heavy-duty engines intended for use in all vehicles except as provided in paragraph (a)(3) of this section.

(A) *Nonmethane hydrocarbons.* 0.9 gram per brake horsepower-hour (0.33 gram per megajoule), as measured under transient operating conditions.

(B) *Carbon monoxide.* (*1*) 14.4 grams per brake horsepower-hour (5.36 grams per megajoule), as measured under transient operating conditions.

(*2*) *For natural gas-fueled Otto-cycle heavy-duty engines utilizing aftertreatment technology.* 0.50 percent of exhaust flow at curb idle.

(C) *Oxides of nitrogen.* (*1*) 5.0 grams per brake horsepower-hour (1.9 grams per megajoule), as measured under transient operating conditions.

(*2*) A manufacturer may elect to include any or all of its natural gas-fueled Otto-cycle heavy-duty engine families in any or all of the NO_X averaging, trading or banking programs for heavy-duty engines, within the restrictions described in § 86.091–15. If the manufacturer elects to include engine families in any of these programs, the NO_X FELs may not exceed 6.0 grams per brake horsepower-hour (2.2 grams per megajoule). This ceiling value applies whether credits for the family are derived from averaging, trading or banking programs.

(vi) For natural gas-fueled Otto-cycle engines intended for use only in vehicles with a Gross Vehicle Weight Rating of greater than 14,000 lbs.

(A) *Nonmethane hydrocarbons.* 1.7 grams per brake horsepower-hour (0.63 gram per megajoule), as measured under transient operating conditions.

(B) *Carbon monoxide.* (*1*) 37.1 grams per brake horsepower-hour (13.8 grams per megajoule), as measured under transient operating conditions.

(*2*) *For natural gas-fueled Otto-cycle heavy-duty engines utilizing aftertreatment technology.* 0.50 percent of exhaust gas flow at curb idle.

(C) *Oxides of nitrogen.* (*1*) 5.0 grams per brake horsepower-hour (1.9 grams per megajoule), as measured under transient operating conditions.

(*2*) A manufacturer may elect to include any or all of its natural gas-fueled Otto-cycle heavy-duty engine families in any or all of the NO_X averaging, trading or banking programs for heavy-duty engines, within the restrictions described in § 86.091–15. If the manufacturer elects to include engine families in any of these programs, the NO_X FELs may not exceed 6.0 grams per brake horsepower-hour (2.2 grams per megajoule). This ceiling value applies whether credits for the family are

derived from averaging, trading or banking programs.

(2) The standards set forth in paragraph (a)(1) of this section refer to the exhaust emitted over the operating schedule set forth in paragraph (f)(1) of appendix I to this part, and measured and calculated in accordance with the procedures set forth in subpart N or P.

(3)(i) A manufacturer may certify one or more Otto-cycle heavy-duty engine configurations intended for use in all vehicles to the emission standards set forth in paragraphs (a)(1)(ii), (a)(1)(iv) or (a)(1)(vi) of this section: *Provided*, that the total model year sales of such configuration(s), segregated by fuel type, being certified to the emission standards in paragraph (a)(1)(ii) of this section represent no more than five percent of total model year sales of each fuel type Otto-cycle heavy-duty engine intended for use in vehicles with a Gross Vehicle Weight Rating of up to 14,000 pounds by the manufacturer.

(ii) The configurations certified to the emission standards of paragraphs (a)(1) (ii), (iv) and (vi) of this section under the provisions of paragraph (a)(3)(i) of this section shall still be required to meet the evaporative emission standards set forth in paragraphs (b)(1)(i), (b)(2)(i) and (b)(3)(i) of this section.

(b) *Evaporative emissions* from 1991 and later model year heavy-duty vehicles shall not exceed:

(1) *Hydrocarbons (for vehicles equipped with gasoline-fueled engines).* (i) For vehicles with a Gross Vehicle Weight Rating of up to 14,000 lbs, 3.0 grams per test.

(ii) For vehicles with a Gross Vehicle Weight Rating of greater than 14,000 lbs, 4.0 grams per test.

(2) *Total Hydrocarbon Equivalent (for vehicles equipped with methanol-fueled engines).*

(i) For vehicles with a Gross Vehicle Weight Rating of up to 14,000 lbs, 3.0 grams per test.

(ii) For vehicles with a Gross Vehicle Weight Rating of greater than 14,000 lbs, 4.0 grams per test.

(3)(i) For vehicles with a Gross Vehicle Weight Rating of up to 26,000 lbs, the standards set forth in paragraphs (b)(1) and (b)(2) of this section refer to a composite sample of evaporative emissions collected under the conditions set forth in subpart M and measured in accordance with those procedures.

(ii) For vehicles with a Gross Vehicle Weight Rating of greater than 26,000 lbs., the standards set forth in paragraphs (b)(1)(ii) and (b)(2)(ii) of this section refer to the manufacturer's engineering design evaluation using good engineering practice (a statement of which is required in § 86.091–23(b)(4)(ii)).

(c) No crankcase emissions shall be discharged into the ambient atmosphere from any new 1991 or later model year Otto-cycle heavy-duty engine.

(d) Every manufacturer of new motor vehicle engines subject to the standards prescribed in this section shall, prior to taking any of the actions specified in section 203(a)(1) of the Act, test or cause to be tested motor vehicle engines in accordance with applicable procedures in subpart N or P of this part to ascertain that such test engines meet the requirements of paragraphs (a) and (c) of this section.

(Secs. 202, 203, 206, 207, 208, 301a, Clean Air Act, as amended; 42 U.S.C. 7521, 7522, 7525, 7541, 7542, 7601a)

[50 FR 10652, Mar. 15, 1985, as amended at 54 FR 14464, Apr. 11, 1989; 55 FR 30622, July 26, 1990; 59 FR 48492, Sept. 21, 1994]

§ 86.091–11 Emission standards for 1991 and later model year diesel heavy-duty engines.

(a)(1) Exhaust emissions from new 1991 and later model year diesel heavy-duty engines shall not exceed the following:

(i)(A) *Hydrocarbons (for petroleum-fueled diesel engines).* 1.3 grams per brake horsepower-hour (0.48 gram per megajoule), as measured under transient operating conditions.

(B) *Total Hydrocarbon Equivalent (for methanol-fueled diesel engines).* 1.3 grams per brake horsepower-hour (0.48 gram per megajoule), as measured under transient operating conditions.

(ii) *Carbon monoxide.* (A) 15.5 grams per brake horsepower-hour (5.77 grams per megajoule), as measured under transient operating conditions.

(B) 0.50 percent of exhaust gas flow at curb idle (methanol-fueled diesel only).

(iii) *Oxides of nitrogen.* (A) 5.0 grams per brake horsepower-hour (1.9 grams

per megajoule), as measured under transient operating conditions.

(B) A manufacturer may elect to include any or all of its diesel heavy-duty engine families in any or all of the NO_X averaging, trading, or banking programs for heavy-duty engines, within the restrictions described in § 86.091–15. If the manufacturer elects to include engine families in any of these programs, the NO_X FELs may not exceed 6.0 grams per brake horsepower-hour (2.2 grams per megajoule). This ceiling value applies whether credits for the family are derived from averaging, trading or banking programs.

(iv) *Particulate* (A) For all diesel engines, including those to be used in urban buses, 0.25 gram per brake horsepower-hour (0.093 gram per megajoule) as measured under transient operating conditions.

(B) [Reserved]

(C) A manufacturer may elect to include any or all of its diesel heavy-duty engine families in any or all of the particulate averaging, trading, or banking programs for heavy-duty engines, within the restrictions described in § 86.091–15. If the manufacturer elects to include engine families in any of these programs, the particulate FELs may not exceed 0.60 gram per brake horsepower-hour (0.22 gram per megajoule). This ceiling value applies whether credits for the family are derived from averaging, trading or banking programs.

(2) The standards set forth in paragraph (a)(1) of this section refer to the exhaust emitted over operating schedules as set forth in paragraph (f)(2) of appendix I of this part, and measured and calculated in accordance with the procedures set forth in subpart N of this part, except as noted in § 86.091–23(c)(2) (i) and (iii).

(b)(1) The opacity of smoke emission from new 1991 and later model year diesel heavy-duty engines shall not exceed:

(i) 20 percent during the engine acceleration mode.

(ii) 15 percent during the engine lugging mode.

(iii) 50 percent during the peaks in either mode.

(2) The standards set forth in paragraph (b)(1) of this section refer to exhaust smoke emissions generated under the conditions set forth in subpart I of this part and measured and calculated in accordance with those procedures.

(3) *Evaporative emissions* (total of non-oxygenated hydrocarbons plus methanol) from 1991 and later model year heavy-duty vehicles equipped with methanol-fueled diesel engines shall not exceed:

(i) For vehicles with a Gross Vehicle Weight Rating of up to 14,000 lbs, 3.0 grams per test.

(ii) For vehicles with a Gross Vehicle Weight Rating of greater than 14,000 lbs, 4.0 grams per test.

(4)(i) For vehicles with a Gross Vehicle Weight Rating of up to 26,000 lbs, the standards set forth in paragraph (b)(3) of this section refer to a composite sample of evaporative emissions collected under the conditions set forth in subpart M and measured in accordance with those procedures.

(ii) For vehicles with a Gross Vehicle Weight Rating of greater than 26,000 lbs, the standard set forth in paragraph (b)(3)(ii) of this section refers to the manufacturers' engineering design evaluation using good engineering practice (a statement of which is required in § 86.091–23(b)(4)(ii)).

(c) No crankcase emissions shall be discharged into the ambient atmosphere from any new 1991 or later model year methanol-fueled diesel, or any naturally-aspirated diesel heavy-duty engine. For petroleum fueled engines only, this provision does not apply to engines using turbochargers, pumps, blowers, or superchargers for air induction.

(d) Every manufacturer of new motor vehicle engines subject to the standards prescribed in this section shall, prior to taking any of the actions specified in section 203(a)(1) of the Act, test or cause to be tested motor vehicle engines in accordance with applicable procedures in subpart I or N of this part to ascertain that such test engines

meet the requirements of paragraphs (a), (b), and (c) and (d) of this section.

(Secs. 202, 203, 206, 207, 208, 301a, Clean Air Act, as amended; 42 U.S.C. 7521, 7522, 7525, 7541, 7542, 7601a)

[50 FR 10653, Mar. 15, 1985, as amended at 54 FR 14465, Apr. 11, 1989; 55 FR 30622, July 26, 1990; 56 FR 64711, Dec. 12, 1991]

§ 86.091–15 NO_X and particulate averaging, trading, and banking for heavy-duty engines.

(a)(1) Heavy-duty engines eligible for the NO_X and particulate averaging, trading, and banking programs are described in the applicable emission standards sections in this subpart. Participation in these programs is voluntary.

(2)(i) Engine families with FELs exceeding the applicable standard shall obtain emission credits in a mass amount sufficient to address the shortfall. Credits may be obtained from averaging, trading, or banking, within the averaging set restrictions described in this section.

(ii) Engine families with FELs below the applicable standard will have emission credits available to average, trade, bank or a combination thereof. Credits may not be used to offset emissions that exceed an FEL. Credits may not be used to remedy an in-use nonconformity determined by a Selective Enforcement Audit or by recall testing. However, credits may be used to allow subsequent production of engines for the family in question if the manufacturer elects to recertify to a higher FEL.

(iii) Engine families within a given averaging set may not both generate and use like emission credits in the same model year. This restriction is to be applied on a pollutant-specific basis.

(b) Participation in the NO_X and/or particulate averaging, trading, and banking programs shall be done as follows.

(1) During certification, the manufacturer shall:

(i) Declare its intent to include specific engine families in the averaging, trading and/or banking programs. Separate declarations are required for each program and for each pollutant (*i.e.*, NO_X and particulate).

(ii) Declare an FEL for each engine family participating in one or more of these three programs.

(A) The FEL must be to the same level of significant digits as the emission standard (one-tenth of a gram per brake horsepower for NO_X emissions and one-hundredth of a gram per brake horsepower-hour for particulate emissions).

(B) In no case may the FEL exceed the upper limit prescribed in the section concerning the applicable heavy-duty engine NO_X and particulate emission standards.

(iii) Calculate the projected emission credits (+ / −) based on quarterly production projections for each participating family and for each pollutant (NO_X and particulate), using the equation in paragraph (c) of this section and the applicable factors for the specific engine family.

(iv)(A) Determine and state the source of the needed credits according to quarterly projected production for engine families requiring credits for certification.

(B) State where the quarterly projected credits will be applied for engine families generating credits.

(C) Credits may be obtained from or applied to only engine families within the same averaging set as described in paragraphs (d) and (e) of this section. Credits available for averaging, trading, or banking as defined in § 86.090–2, may be applied to a given engine famil(y) (ies), or reserved as defined in § 86.091–2.

(2) Based on this information each manufacturer's certification application must demonstrate:

(i) That at the end of model year production, each engine family has a net emissions credit balance of zero or more using the methodology in paragraph (c) of this section with any credits obtained from averaging, trading or banking.

(ii) The source of the credits to be used to comply with the emission standard if the FEL exceeds the standard, or where credits will be applied if the FEL is less than the emission standard. In cases where credits are being obtained, each engine family involved must state specifically the source (manufacturer/engine family) of

the credits being used. In cases where credits are being generated/supplied, each engine family involved must state specifically the designated use (manufacturer/engine family or reserved) of the credits involved. All such reports shall include all credits involved in averaging, trading or banking.

(3) During the model year manufacturers must:

(i) Monitor projected versus actual production to be certain that compliance with the emission standards is achieved at the end of the model year.

(ii) Provide the end of-model year reports required under § 86.091–23.

(iii) Maintain the quarterly records required under § 86.091–7(c)(8).

(4) Projected credits based on information supplied in the certification application may be used to obtain a certificate of conformity. However, any such credits may be revoked based on review of end-of-model year reports, follow-up audits, and any other verification steps deemed appropriate by the Administrator.

(5) Compliance under averaging, banking, and trading will be determined at the end of the model year. Engine families without an adequate amount of actual NO_X and/or particulate emission credits will violate the conditions of the certificate of conformity. The certificates of conformity may be voided *ab initio* for those engine families.

(6) If EPA or the manufacturer determines that a reporting error occurred on an end-of-year report previously submitted to EPA under this section, the manufacturer's credits and credit calculations will be recalculated. Erroneous positive credits will be void. Erroneous negative credit balances may be adjusted by EPA.

(i) If EPA review of a manufacturer's end-of-year report indicates an inadvertent credit shortfall, the manufacturer will be permitted to purchase the necessary credits to bring the credit balance for that engine family to zero, at the ratio of 1.2 credits purchased for every credit needed to bring the balance to zero. If sufficient credits are not available to bring the credit balance for the engine family in question to zero, EPA may void the certificate for that engine family *ab initio.*

(ii) If within 90 days of receipt of the manufacturer's end-of-year report, EPA review determines a reporting error in the manufacturer's favor (*i.e.*, resulting in a positive credit balance) or if the manufacturer discovers such an error within 90 days of EPA receipt of the end-of-year report, the credits will be restored for use by the manufacturer.

(c)(1) For each participating engine family, NO_X and particulate emission credits (positive or negative) are to be calculated according to one of the following equations and rounded, in accordance with ASTM E29–67, to the nearest one-tenth of a Megagram (Mg). Consistent units are to be used throughout the equation.

For determining credit need for all engine families and credit availability for engine families generating credits for averaging programs only:

$$\text{Emission credits}=(\text{Std}-\text{FEL})\times(\text{CF})\times(\text{UL})\times(\text{Production})\times(10^{-6})$$

For determining credit availability for engine families generating credits for trading or banking programs:

$$\text{Emission credits}=(\text{Std}-\text{FEL})\times(\text{CF})\times(\text{UL})\times(\text{Production})\times(10^{-6})\times(0.8)$$

Where:

Std=the current and applicable heavy-duty engine NO_X or particulate emission standard in grams per brake horsepower hour or grams per Megajoule.

FEL=the NO_X or particulate family emission limit for the engine family in grams per brake horsepower-hour or grams per Megajoule.

CF=a transient cycle conversion factor in BHP-hr/mi or MJ/mi, as given in paragraph (c)(2) of this section.

UL=the useful life, or alternative life as described in paragraph (f) of § 86.090–21, for the given engine family in miles.

Production=the number of engines produced for U.S. sales within the given engine family during the model year. Quarterly production projections are used for initial certification. Actual production is used for end-of-year compliance determination.

0.8=a one-time discount applied to all credits to be banked or traded within the model year generated. Banked credits traded in a subsequent model year will not be subject to an additional discount. Banked credits used in a subsequent model year's averaging program will not have the discount restored.

(2) The transient cycle conversion factor is the total (integrated) cycle brake horsepower-hour or Megajoules, divided by the equivalent mileage of the applicable transient cycle. For Otto-cycle heavy-duty engines, the equivalent mileage is 6.3 miles. For diesel heavy-duty engines, the equivalent mileage is 6.5 miles. When more than one configuration is chosen by EPA to be tested in the certification of an engine family (as described in § 86.085–24), the conversion factor used is to be based upon the configuration generating the highest conversion factor when determining credit need and the lowest conversion factor when determining credit availability for banking, trading or averaging.

(d) *Averaging sets for NO_X emission credits:* The averaging and trading of NO_X emission credits will only be allowed between heavy-duty engine families in the same averaging set and in the same regional category. Engines produced for sale in California constitute a separate regional category than engines produced for sale in the other 49 states. Banking and trading are not applicable to engines sold in California. The averaging sets for the averaging and trading of NO_X emission credits for heavy-duty engines are defined as follows:

(1) For Otto-cycle heavy-duty engines:

(i) Otto-cycle heavy-duty engines constitute an averaging set. Averaging and trading among all Otto-cycle heavy-duty engine families is allowed. There are no subclass restrictions.

(ii) Gasoline-fueled heavy-duty vehicles certified under the provisions of § 86.085–1(b) may not average or trade credits with gasoline-fueled heavy-duty Otto-cycle engines, but may average or trade credits with light-duty trucks.

(2) For diesel cycle heavy-duty engines:

(i) Each of the three primary intended service classes for heavy-duty diesel engines, as defined in § 86.090–2, constitute an averaging set. Averaging and trading among all diesel cycle engine families within the same primary service class is allowed.

(ii) Urban buses are treated as members of the primary intended service class where they would otherwise fall.

(e) *Averaging sets for particulate emission credits.* The averaging and trading of particulate emission credits will only be allowed between diesel cycle heavy-duty engine families in the same averaging set and in the same regional category. Engines produced for sale in California constitute a separate regional category than engines produced for sale in the other 49 states. Banking and trading are not applicable to engines sold in California. The averaging sets for the averaging and trading of particulate emission credits for diesel cycle heavy-duty engines are defined as follows:

(1) Engines intended for use in urban buses constitute a separate averaging set from all other heavy-duty engines. Averaging and trading among all diesel cycle bus engine families is allowed.

(2) For heavy-duty engines, exclusive of urban bus engines, each of the three primary intended service classes for heavy-duty diesel cycle engines, as defined in § 86.090–2, constitute an averaging set. Averaging and trading between diesel cycle engine families within the same primary service class is allowed.

(3) Otto-cycle engines may not participate in particulate averaging, trading, or banking.

(f) Banking of NO_X and particulate emission credits:

(1) *Credit deposits.* (i) Under this phase of the banking program, emission credits may be banked from engine families produced during the three model years prior to the effective model year of the new HDE NO_X or particulate emission standard. Credits may not be banked from engine families made during any other model years.

(ii) Manufacturers may bank credits only after the end of the model year and after EPA has reviewed their end-of-year report. During the model year and before submittal of the end-of-year report, credits originally designated in the certification process for banking will be considered reserved and may be redesignated for trading or averaging.

(2) *Credit withdrawals.* (i) After being generated, banked/reserved credits shall be available for use three model years prior to, through three model years immediately after the effective date of the new HDE NO_X or particulate emission standard, as applicable.

However, credits not used within the period specified above shall be forfeited.

(ii) Manufacturers withdrawing banked emission credits shall indicate so during certification and in their credit reports, as described in §86.091–23.

(3) *Use of banked emission credits.* The use of banked credits shall be within the averaging set and other restrictions described in paragraphs (d) and (e) of this section, and only for the following purposes:

(i) Banked credits may be used in averaging, trading, or in any combination thereof, during the certification period. Credits declared for banking from the previous model year but unreviewed by EPA may also be used. However, they may be revoked at a later time following EPA review of the end-of-year report or any subsequent audit actions.

(ii) Banked credits may not be used for NO_X or particulate averaging and trading to offset emissions that exceed an FEL. Banked credits may not be used to remedy an in-use nonconformity determined by a Selective Enforcement Audit or by recall testing. However, banked credits may be used for subsequent production of the engine family if the manufacturer elects to recertify to a higher FEL.

(g)(1) The following paragraphs assume NO_X and particulate nonconformance penalties (NCPs) will be available for the 1991 and later model year HDEs.

(2) Engine families paying an NCP for noncompliance of any emission standard *may not:*

(i) Participate in the averaging program,

(ii) Generate emission credits for any pollutant under banking and trading, and

(iii) Use emission credits for any pollutant from banking and trading.

(3) If a manufacturer has any engine family to which application of NCPs *and* averaging, banking, and trading credits is desired, that family must be separated into two distinct families. One family, whose FEL equals the standard, must use NCPs only, while the other, whose FEL does not equal the standard, must use emission credits only.

(4) If a manufacturer has any engine family in a given averaging set which is using NO_X and/or particulate NCPs, none of that manufacturer's engine families in that averaging set may generate credits for banking and trading.

(h) In the event of a negative credit balance in a trading situation, both the buyer and the seller would be liable.

(i) Certification fuel used for credit generation must be of a type that is both available in use and expected to be used by the engine purchaser. Therefore, upon request by the Administrator, the engine manufacturer must provide information acceptable to the Administrator that the designated fuel is readily available commercially and would be used in customer service.

[55 FR 30622, July 26, 1990, as amended at 55 FR 46628, Nov. 5, 1990]

§86.091–21 Application for certification.

(a) A separate application for a certificate of conformity shall be made for each set of standards (or family emission limits, as appropriate) and each class of new motor vehicles or new motor vehicle engines. Such application shall be made to the Administrator by the manufacturer and shall be updated and corrected by amendment.

(b) The application shall be in writing, signed by an authorized representative of the manufacturer, and shall include the following:

(1)(i) Identification and description of the vehicles (or engines) covered by the application and a description of their engine (vehicles only), emission control system and fuel system components. This shall include a detailed description of each auxiliary emission control device (AECD) to be installed in or on any certification test vehicle (or certification test engine).

(ii)(A) The manufacturer shall provide to the Administrator in the application for certification:

(*1*) A list of those parameters which are physically capable of being adjusted (including those adjustable parameters for which access is difficult) and that, if adjusted to settings other than the manufacturer's recommended setting, may affect emissions;

(*2*) A specification of the manufacturer's intended physically adjustable range of each such parameter, and the production tolerances of the limits or stops used to establish the physically adjustable range;

(*3*) A description of the limits or stops used to establish the manufacturer's intended physically adjustable range of each adjustable parameter, or any other means used to inhibit adjustment;

(*4*) The nominal or recommended setting, and the associated production tolerances, for each such parameter.

(B) The manufacturer may provide, in the application for certification, information relating to why certain parameters are not expected to be adjusted in actual use and to why the physical limits or stops used to establish the physically adjustable range of each parameter, or any other means used to inhibit adjustment, are effective in preventing adjustment of parameters on in-use vehicles to settings outside the manufacturer's intended physically adjustable ranges. This may include results of any tests to determine the difficulty of gaining access to an adjustment or exceeding a limit as intended or recommended by the manufacturer.

(C) The Administrator may require to be provided detailed drawings and descriptions of the various emission related components, and/or hardware samples of such components, for the purpose of making his determination of which vehicle or engine parameter will be subject to adjustment for new certification and Selective Enforcement Audit testing and of the physically adjustable range for each such vehicle or engine parameter.

(2) Projected U.S. sales data sufficient to enable the Administrator to select a test fleet representative of the vehicles (or engines) for which certification is requested. The sales data shall also include the altitude of intended sale for light-duty trucks.

(3) A description of the test equipment and fuel proposed to be used.

(4)(i) For light-duty vehicles and light-duty trucks, a description of the test procedures to be used to establish the evaporative emission deterioration factors required to be determined and supplied in § 86.091–23(b)(2).

(ii) For heavy-duty vehicles equipped with gasoline-fueled or methanol-fueled engines, the Administrator does not assume that each evaporative emission family-evaporative emission control system combination will deteriorate in a unique manner during the useful life of the vehicle. The manufacturer shall therefore identify those evaporative emission deterioration factors which shall be applied to the various evaporative emission family-evaporative emission control system combinations which are expected to exhibit similar deterioration characteristics during the useful life of the vehicle.

(5)(i)(A) A description of the test procedures to be used to establish the durability data or the exhaust emission deterioration factors required to be determined and supplied in § 86.091–23(b)(1).

(B) A statement of the useful life of each light-duty truck engine family or heavy-duty engine family.

(C) For engine families provided an alternative useful-life period under paragraph (f) of this section, a statement of that alternative period and a brief synopsis of the justification.

(ii) For heavy-duty diesel engine families, a statement of the primary intended service class (light, medium, or heavy) and an explanation as to why that service class was selected. Each diesel engine family shall be certified under one primary intended service class only. After reviewing the guidance in § 86.090–2, the class shall be determined on the basis of which class best represents the majority of the sales of that engine family.

(iii)(A) For each light-duty truck engine family and each heavy-duty engine family, a statement of recommended maintenance and procedures necessary to assure that the vehicles (or engines) covered by a certificate of conformity in operation conform to the regulations, and a description of the program for training of personnel for such maintenance, and the equipment required.

(B) A description of vehicle adjustments or modifications necessary, if any, to assure that light-duty vehicles

and light-duty trucks covered by a certificate of conformity conform to the regulations while being operated at any altitude locations, and a statement of the altitude at which the adjustments or modifications apply.

(iv) At the option of the manufacturer, the proposed composition of the emission-data test fleet or (where applicable) the durability-data test fleet.

(6)(i)(A) If the manufacturer elects to participate in the particulate averaging program for diesel light-duty vehicles and/or diesel light-duty trucks, the application must list the particulate FEL and the projected U.S. (49-state) production volume, by quarter, of the family for the model year.

(B) The manufacturer shall choose the level of the family particulate emission limits, accurate to one-hundredth of a gram per mile.

(C) The manufacturer may at any time during production elect to change the level of any family particulate emission limit(s) by submitting the new limit(s) to the Administrator and by demonstrating compliance with the limit(s) as described in § 86.090–2 and § 86.091–28(b)(5)(i).

(ii)(A) If the manufacturer elects to participate in the NO_X averaging program for light-duty trucks, the application must list the NO_X FEL and the projected U.S. (49-state) production volume, by quarter, of the family for the model year.

(B) The manufacturer shall choose the level of the family NO_X emission limits, accurate to one-tenth of a gram per mile.

(C) The manufacturer may at any time during production elect to change the level of any family NO_X emission limit(s) by submitting the new limits to the Administrator and by demonstrating compliance with the limit(s) as described in § 86.088–2 and 86.091–28(b)(5)(ii).

(iii) If the manufacturer elects to participate in any of the particulate and/or the NO_X averaging, trading, or banking programs for heavy-duty engines, the application must list the information required in § 86.091–15 and § 86.091–23.

(7)(i) For Otto-cycle heavy-duty engines, the application must state whether the engine family is being certified for use in all vehicles regardless of their Gross Vehicle Weight Rating (see § 86.091–10 (a)(1)(i) and (a)(3)(i)), or, only for use in vehicles with a Gross Vehicle Weight Rating greater than 14,000 pounds.

(ii) If the engine family is being certified for use in all vehicles and, is being certified to the emission standards applicable to Otto-cycle engines for use only in vehicles with a Gross Vehicle Weight Rating over 14,000 pounds under the provisions of paragraph (a)(3) of § 86.091–10, then the application must also attest that the engine family, together with all other engine families being certified under the provisions of paragraph (a)(3) of § 86.091–10, represent no more than 5 percent of model year sales of the manufacturer of all Otto-cycle heavy-duty engines for use in vehicles with Gross Vehicle Weight Ratings of up to 14,000 pounds.

(c) Complete copies of the application and of any amendments thereto, and all notifications under § 86.079–32, § 86.079–33, and § 86.082–34 shall be submitted in such multiple copies as the Administrator may require.

(d) Incomplete light-duty trucks shall have a maximum completed curb weight and maximum completed frontal area specified by the manufacturer.

(e) For vehicles equipped with gasoline-fueled or methanol-fueled heavy-duty engines, the manufacturer shall specify a maximum nominal fuel tank capacity for each evaporative emission family-evaporative emission control system combination.

(f) Light-duty truck and heavy-duty engine manufacturers who believe that the useful life periods of § 86.090–2 are significantly unrepresentative for one or more engine families (either too long or too short), may petition the Administrator to provide an alternative useful-life period. This petition must include the full rationale behind the request together with any supporting data and other evidence. Based on this or other information the Administrator may assign an alternative useful-life period. Any petition should be submitted in a timely manner, to allow

adequate time for a thorough evaluation.

(Secs. 202, 203, 206, 207, 208, 301a, Clean Air Act, as amended; 42 U.S.C. 7521, 7522, 7525, 7541, 7542, 7601a)

[50 FR 10655, Mar. 15, 1985, as amended at 52 FR 47867, Dec. 16, 1987; 54 FR 14469, Apr. 11, 1989; 55 FR 30625, July 26, 1990]

§ 86.091–23 Required data.

(a) The manufacturer shall perform the tests required by the applicable test procedures, and submit to the Administrator the following information: *Provided, however,* That if requested by the manufacturer, the Administrator may waive any requirement of this section for testing of vehicle (or engine) for which emission data are available or will be made available under the provisions of § 86.091–29.

(b)(1)(i) Exhaust emission durability data on such light-duty vehicles tested in accordance with applicable test procedures and in such numbers as specified, which will show the performance of the systems installed on or incorporated in the vehicle for extended mileage, as well as a record of all pertinent maintenance performed on the test vehicles.

(ii) Exhaust emission deterioration factors for light-duty trucks and heavy-duty engines, and all test data that are derived from the testing described under § 86.091–21(b)(4)(iii)(A), as well as a record of all pertinent maintenance. Such testing shall be designed and conducted in accordance with good engineering practice to assure that the engines covered by a certificate issued under § 86.091–30 will meet the emission standards (or family emission limits, as appropriate) in § 86.091–9, § 86.091–10, or § 86.091–11 as appropriate, in actual use for the useful life of the engine.

(2) For light-duty vehicles and light-duty trucks, evaporative emission deterioration factors for each evaporative emission family-evaporative emission control system combination and all test data that are derived from testing described under § 86.091–21(b)(4)(i) designed and conducted in accordance with good engineering practice to assure that the vehicles covered by a certificate issued under § 86.091–30 will meet the evaporative emission standards in § 86.091–8 or § 86.091–9, as appropriate, for the useful life of the vehicle.

(3) For heavy-duty vehicles equipped with gasoline-fueled or methanol-fueled engines, evaporative emission deterioration factors for each evaporative emission family-evaporative emission control system combination identified in accordance with § 86.091–21(b)(4)(ii). Furthermore, a statement that the test procedure(s) used to derive the deterioration factors includes, but need not be limited to, a consideration of the ambient effects of ozone and temperature fluctuations, and the service accumulation effects of vibration, time, and vapor saturation and purge cycling. The deterioration factor test procedure shall be designed and conducted in accordance with good engineering practice to assure that the vehicles covered by a certificate issued under § 86.091–30 will meet the evaporative emission standards in § 86.091–10 and § 86.091–11 in actual use for the useful life of the engine. Furthermore, a statement that a description of the test procedure, as well as all data, analyses and evaluations, is available to the Administrator upon request.

(4)(i) For heavy-duty vehicles with a Gross Vehicle Weight Rating of up to 26,000 lbs and equipped with gasoline-fueled or methanol-fueled engines, a written statement to the Administrator certifying that the manufacturer's vehicles meet the standards of § 86.091–10 or § 86.091–11 (as applicable) as determined by the provisions of § 86.091–28. Furthermore, a written statement to the Administrator that all data, analyses, test procedures, evaluations, and other documents, on which the above statement is based, are available to the Administrator upon request.

(ii) For heavy-duty vehicles with a Gross Vehicle Weight Rating of greater than 26,000 lbs and equipped with gasoline-fueled or methanol-fueled engines, a written statement to the Administrator certifying that the manufacturer's evaporative emission control systems are designed, using good engineering practice, to meet the standards of § 86.091–10 or § 86.091–11 (as applicable) as determined by the provisions of § 86.091–28. Furthermore, a written statement to the Administrator that

all data, analyses, test procedures, evaluations, and other documents, on which the above statement is based, are available to the Administrator upon request.

(c) *Emission data.* (1) Emission data, including in the case of methanol fuel, methanol, formaldehyde and total hydrocarbon equivalent on such vehicles tested in accordance with applicable test procedures and in such numbers as specified. These data shall include zero-mile data, if generated and emission data generated for certification as required under § 86.090–26(a)(3)(i) or § 86.090–26(a)(3)(ii). In lieu of providing emission data on idle CO emissions, smoke emissions or particulate emissions from methanol-fueled diesel certification vehicles the Administrator may, on request of the manufacturer, allow the manufacturer to demonstrate (on the basis of previous emission tests, development tests, or other information) that the engine will conform with the applicable emission standards of § 86.090–8 or § 86.090–9.

(2) Certification engines. (i) Emission data on such engines tested in accordance with applicable emission test procedures of this subpart and in such numbers as specified. These data shall include zero-hour data, if generated, and emission data generated for certification as required under § 86.090–26(c)(4). In lieu of providing emission data on idle CO emissions or particulate emissions from methanol-fueled diesel certification engines, or on CO emissions from petroleum-fueled or methanol-fueled diesel certification engines the Administrator may, on request of the manufacturer, allow the manufacturer to demonstrate (on the basis of previous emission tests, development tests, or other information) that the engine will conform with the applicable emission standards of § 86.091–11.

(ii) For heavy-duty diesel engines, a manufacturer may submit hot-start data only, in accordance with subpart N of this part, when making application for certification. However, for conformity SEA and recall testing by the Agency, both the cold-start and hot-start test data, as specified in subpart N of this part, will be included in the official results.

(d) A statement that the vehicles (or engines) for which certification is requested conform to the requirements in § 86.084–5(b), and that the descriptions of tests performed to ascertain compliance with the general standards in § 86.084–5(b), and the data derived from such tests, are available to the Administrator upon request.

(e)(1) A statement that the test vehicles (or test engines) with respect to which data are submitted to demonstrate compliance with the applicable standards (or family emission limits, as appropriate) of this subpart are in all material respects as described in the manufacturer's application for certification, have been tested in accordance with the applicable test procedures utilizing the fuels and equipment described in the application for certification and that on the basis of such tests the vehicles (or engines) conform to the requirements of this part. If such statements cannot be made with respect to any vehicle (or engine) tested, the vehicle (or engine) shall be identified, and all pertinent data relating thereto shall be supplied to the Administrator. If, on the basis of the data supplied and any additional data as required by the Administrator, the Administrator determines that the test vehicles (or test engine) was not as described in the application for certification or was not tested in accordance with the applicable test procedures utilizing the fuels and equipment as described in the application for certification, the Administrator may make the determination that the vehicle (or engine) does not meet the applicable standards (or family emission limits, as appropriate). The provisions of § 86.091–30(b) shall then be followed.

(2) For evaporative emission durability, or light-duty truck or heavy-duty engine exhaust emission durability, a statement of compliance with paragraph (b)(1)(ii), (b)(2), or (b)(3) of this section, as applicable.

(f) Additionally, manufacturers participating in the particulate averaging program for diesel light-duty vehicles and diesel light-duty trucks shall submit:

(1) In the application for certification, a statement that the vehicles for which certification is requested will

not, to the best of the manufacturer's belief, when included in the manufacturer's production-weighted average emission level, cause the applicable particulate standard(s) to be exceeded.

(2) No longer than 90 days after the end of a given model year of production of engine families included in one of the diesel particulate averaging programs, the number of vehicles produced in each engine family at each certified particulate FEL, along with the resulting production-weighted average particulate emission level.

(g) Additionally, manufacturers participating in the NO_X averaging program for light-duty trucks shall submit:

(1) In the application for certification, a statement that the vehicles for which certification is required will not, to the best of the manufacturer's belief, when included in the manufacturer's production-weighted average emission level, cause the applicable NO_X standard(s) to be exceeded.

(2) No longer than 90 days after the end of a given model year of production of engine families included in the NO_X averaging program, the number of vehicles produced in each engine family at each certified NO_X emission level.

(h) Additionally, manufacturers participating in any of the NO_X and/or particulate averaging, trading, or banking programs for heavy-duty engines shall submit for each participating family:

(1) In the application for certification:

(i) A statement that the engines for which certification is requested will not, to the best of the manufacturer's belief, when included in any of the averaging, trading, or banking programs cause the applicable NO_X or particulate standard(s) to be exceeded.

(ii) The type (NO_X or particulate) and the projected number of credits generated/needed for this family, the applicable averaging set, the projected U.S. (49-state) production volumes, by quarter, NCPs in use on a similar family and the values required to calculate credits as given in § 86.091–15. Manufacturers shall also submit how and where credit surpluses are to be dispersed and how and through what means credit deficits are to be met, as explained in § 86.091–15. The application must project that each engine family will be in compliance with the applicable NO_X and/or particulate emission standards based on the engine mass emissions, and credits from averaging, trading and banking.

(3) End-of-year reports for each engine family participating in any of the averaging, trading, or banking programs.

(i) These reports shall be submitted within 90 days of the end of the model year to: Director, Manufacturers Operations Division (EN–340F), U.S. Environmental Protection Agency, 401 M Street, SW., Washington, DC 20460.

(ii) These reports shall indicate the engine family, the averaging set, the actual U.S. (49-state) production volume, the values required to calculate credits as given in § 86.091–15, the resulting type (NO_X or particulate) and number of credits generated/required, and the NCPs in use on a similar NCP family. Manufacturers shall also submit how and where credit surpluses were dispersed (or are to be banked) and how and through what means credit deficits were met. Copies of contracts related to credit trading must also be included or supplied by the broker if applicable. The report shall also include a calculation of credit balances to show that net mass emissions balances are within those allowed by the emission standards (equal to or greater than a zero credit balance). The credit discount factor described in 86.091–15 must be included as required.

(iii) The 49-state production counts for end-of-year reports shall be based on the location of the first point of retail sale (*e.g.*, customer, dealer, secondary manufacturer) by the manufacturer.

(iv) Errors discovered by EPA or the manufacturer in the end-of-year report, including errors in credit calculation, may be corrected up to 90 days subsequent to submission of the end-of-year report. Errors discovered by EPA after 90 days shall be corrected if credits are reduced. Errors in the manufacturer's favor will not be corrected if discovered after the 90 day correction period allowed.

(i) Failure by a manufacturer participating in the averaging, trading, or

banking programs to submit any quarterly or end-of-year report (as applicable) in the specified time for all vehicles and engines that are part of an averaging set is a violation of section 203(a)(1) of the Clean Air Act for each such vehicle and engine.

(j) Failure by a manufacturer generating credits for deposit only in either the HDE NO_X or particulate banking programs to submit their end-of-year reports in the applicable specified time period (*i.e.,* 90 days after the end of the model year) shall result in the credits not being available for use until such reports are received and reviewed by EPA. Use of projected credits pending EPA review will not be permitted in these circumstances.

(k) Engine families certified using NCPs are not required to meet the requirements outlined above.

(Secs. 202, 203, 206, 207, 208, 301a, Clean Air Act, as amended; 42 U.S.C. 7521, 7522, 7525, 7541, 7542, 7601a)

[50 FR 10659, Mar. 15, 1985, as amended at 50 FR 29384, July 19, 1985; 54 FR 14473, Apr. 11, 1989; 55 FR 30625, July 26, 1990; 56 FR 64711, Dec. 12, 1991]

§86.091–28 Compliance with emission standards.

(a)(1) Paragraph (a) of this section applies to light-duty vehicles.

(2) The applicable exhaust and fuel evaporative emissions standards (and family particulate emission limits, as appropriate) of this subpart apply to the emissions of vehicles for their useful life.

(3) Since it is expected that emission control efficiency will change with mileage accumulation on the vehicle, the emission level of a vehicle which has accumulated 50,000 miles will be used as the basis for determining compliance with the standards (or family particulate emission limit, as appropriate).

(4) The procedure for determining compliance of a new motor vehicle with exhaust emission standards (or family particulate emission limit, as appropriate) is as follows, except where specified by paragraph (a)(7) of this section for the Alternative Durability Program:

(i) Separate emission deterioration factors shall be determined from the exhaust emission results of the durability-data vehicle(s) for each engine-system combination. A separate factor shall be established, as required for compliance with applicable emission standards for exhaust HC, exhaust THCE, exhaust NMHC, exhaust CO, exhaust NO_X and exhaust particulate for each engine-system combination. A separate evaporative emission deterioration factor, as required for compliance with applicable emission standards, shall be determined for each evaporative emission family-evaporative emission control system combination from the testing conducted by the manufacturer.

(A) The applicable results to be used unless excluded by paragraph (a)(4)(i)(A)(*4*) of this section in determining the exhaust emission deterioration factors for each engine-system combination shall be:

(*1*) All valid exhaust emission data from the tests required under §86.084–26(a)(4) except the zero-mile tests. This shall include the official test results, as determined in §86.091–29 for all tests conducted on all durability-data vehicles of the combination selected under §86.085–24(c) (including all vehicles elected to be operated by the manufacturer under §86.085–24(c)(1)(ii)).

(*2*) All exhaust emission data from the tests conducted before and after the scheduled maintenance provided in §86.088–25.

(*3*) All exhaust emission data from tests required by maintenance approved under §86.088–25, in those cases where the Administrator conditioned his approval for the performance of such maintenance on the inclusion of such data in the deterioration factor calculation.

(*4*) The manufacturer has the option of applying an outlier test point procedure to completed durability data within its certification testing program for a given model year. The outlier procedure will be specified by the Administrator. For any pollutant, durability-data test points that are identified as outliers shall not be included in the determination of deterioration factors if the manufacturer has elected this option. The manufacturer shall specify to the Administrator before the certification of the first engine

family for that model year, if it intends to use the outlier procedure. The manufacturer may not change procedures after the first engine family of the model year is certified. Where the manufacturer chooses to apply both the outlier procedure and averaging (as allowed under § 86.084–26(a)(6)(i)) to the same data set, the outlier procedure shall be completed prior to applying the averaging procedure.

(B) All applicable exhaust emission results shall be plotted as a function of the mileage on the system, rounded to the nearest mile, and the best fit straight lines, fitted by the method of least squares, shall be drawn through all these data points. The data will be acceptable for use in the calculation of the deterioration factor only if the interpolated 4,000-mile and 50,000-mile points on this line are within the low-altitude standards provided in § 86.087–8. Exceptions to this where data are still acceptable are when a best fit straight line crosses an applicable standard but no data points exceeded the standard, or the best fit straight line crosses an applicable standard with a negative slope (the 4,000-mile interpolated point is higher than the 50,000-mile interpolated point) but the 50,000-mile actual data point is below the standard. An multiplicative exhaust emission deterioration factor shall be calculated for each engine-system combination as follows:

Factor=Exhaust emissions interpolated to 50,000 miles divided by exhaust emissions interpolated to 4,000 miles.

These interpolated values shall be carried out to a minimum of four places to the right of the decimal point before dividing one by the other to determine the deterioration factor. The results shall be rounded to three places to the right of the decimal point in accordance with ASTM E 29–67.

(C)(*1*) An evaporative emissions deterioration factor shall be determined from the testing conducted as described in § 86.090–21(b)(4)(i), for each evaporative emission family- evaporative emission control system combination to indicate the evaporative emission level at 50,000 miles relative to the evaporative emission level at 4,000 miles as follows:

Factor = Evaporative emission level at 50,000 miles minus the evaporative emission level at 4,000 miles.

(*2*) The factor in paragraph (a)(4)(i)(C)(*1*) of this section shall be established to a minimum of two places to the right of the decimal.

(ii)(A) The official exhaust emission test results for each emission-data vehicle at the selected test point shall be multiplied by the appropriate deterioration factor: *Provided*, that if a deterioration factor as computed in paragraph (a)(4)(i)(B) of this section is less than one, that deterioration factor shall be one for the purposes of this paragraph.

(B) The official evaporative emission test results for each evaporative emission-data vehicle at the selected test point shall be adjusted by addition of the appropriate deterioration factor: *Provided*, that if a deterioration factor as computed in paragraph (a)(4)(i)(C) of this section is less than zero, that deterioration factor shall be zero for the purposes of this paragraph.

(iii) The emissions to compare with the standard (or the family particulate emission limit, as appropriate) shall be the adjusted emissions of paragraphs (a)(4)(ii) (A) and (B) of this section for each emission-data vehicle. Before any emission value is compared with the standard (or the family particulate emission limit, as appropriate), it shall be rounded, in accordance with ASTM E 29–67, to two significant figures. The rounded emission values may not exceed the standard (or the family particulate emission limit, as appropriate).

(iv) Every test vehicle of an engine family must comply with the exhaust emission standards (or the family particulate emission limit, as appropriate), as determined in paragraph (a)(4)(iii) of this section, before any vehicle in that family may be certified.

(v) Every test vehicle of an evaporative emission family must comply with the evaporative emission standard, as determined in paragraph (a)(4)(iii) of this section, before any vehicle in that family may be certified.

(5) If a manufacturer chooses to change the level of any family particulate emission limit(s) in the particulate averaging program, compliance

with the new limit(s) must be based upon existing certification data.

(6) If a manufacturer chooses to participate in the diesel particulate averaging program, the production-weighted average of the family particulate emission limits of all affected engine families must comply with the particulate standards in § 86.087–8(a)(1)(iv), or the composite particulate standard defined in § 86.085–2, as appropriate, at the end of the production year.

(7) The procedure to determine the compliance of new motor vehicles in the Alternative Durability Program (described in § 86.085–13) is the same as described in paragraphs (a)(4)(iii) through (a)(4)(v) of this section. For the engine families that are included in the Alternative Durability Program, the exhaust emission deterioration factors used to determine compliance shall be those that the Administrator has approved under § 86.085–13(c). The evaporative emission deterioration factor for each evaporative emission family shall be determined and applied according to paragraph (a)(4) of this section. The procedures to determine the minimum exhaust emissions deterioration factors required under § 86.085–13(d) are as follows:

(i) Separate deterioration factors shall be determined from the exhaust emission results of the durability-data vehicles for each engine family group. A separate factor as necessary to establish compliance with applicable emission standards shall be established for exhaust HC, exhaust THCE, exhaust NMHC, exhaust CO and exhaust NO_X for each engine family group. The evaporative emission deterioration factor for each evaporative family will be determined and applied in accordance with paragraph (a)(4) of this section.

(ii) The deterioration factors for each engine family group shall be determined by the Administrator using historical durability data from as many as three previous model years. These data will consist of deterioration factors generated by durability-data vehicles representing certified engine families and of deterioration factors from vehicles selected under § 86.085–24(h). The Administrator shall determine how these data will be combined for each engine family group.

(A) The test result to be used in the calculation of each deterioration factor to be combined for each engine family group shall be those test results specified in paragraph (a)(4)(i)(A) of this section.

(B) For each durability-data vehicles selected under § 86.085–24(h), all applicable exhaust emissions results shall be plotted as a function of the mileage on the system rounded to the nearest mile, and the best fit straight lines, fitted by method of least squares, shall be drawn through all these data points. The exhaust deterioration factor for each durability-data vehicles shall be calculated as specified in paragraph (a)(4)(i)(B) of this section.

(C) *Line-crossing.* For the purposes of paragraph (a)(5) of this section, line crossing occurs when either of the interpolated 4,000- and 50,000-mile points of the best fit straight line exceeds the applicable emission standard and at least one applicable data point exceeds the standard.

(*1*) The Administrator will not accept for certification line-crossing data from preproduction durability-data vehicles selected under § 86.085–24(c), § 86.085–24(h)(2), or (h)(3).

(*2*) The Administrator will not accept for certification line-crossing data from production durability-data vehicles selected under § 86.085–24(h)(1) unless the 4,000-mile test result multiplied by the engine family group deterioration factor does not exceed the applicable emission standards. The deterioration factors used for this purpose shall be those that were used in the certification of the production vehicle. Manufacturers may calculate this product immediately after the 4,000-mile test of the vehicle. If the product exceeds the applicable standards, the manufacturer may, with the approval of the Administrator, discontinue the vehicle and substitute a new vehicle. The manufacturer may continue the original vehicle, but the data will not be acceptable if line crossing occurs.

(b)(1) Paragraph (b) of this section applies to light-duty trucks.

(2) The exhaust and evaporative emission standards (and family emission limits, as appropriate) of § 86.091–9 apply to the emissions of vehicles for their useful life.

(3) Since emission control efficiency generally decreases with the accumulation of mileage on the vehicle, deterioration factors will be used in combination with emission-data vehicle test results as the basis for determining compliance with the standards (or family emission limits, as appropriate).

(4)(i) Paragraph (b)(4) of this section describes the procedure for determining compliance of a new vehicle with exhaust emission standards (or family emission limits, as appropriate), based on deterioration factors supplied by the manufacturers, except where specified by paragraph (b)(5) of this section for the Alternative Durability Program.

(ii) Separate exhaust emission deterioration factors, determined from tests of vehicles, engines, subsystems or components conducted by the manufacturer, shall be supplied for each engine-system combination. Separate factors shall be established as required for compliance with applicable emission standards for transient HC, THCE, NMHC, CO, and NO_X, idle CO and exhaust particulate.

(iii) For transient HC, THCE, NMHC and CO, and NO_X, idle CO and/or exhaust particulate as appropriate, the official exhaust emission results for each emission-data vehicle at the selected test point shall be adjusted by multiplication by the appropriate deterioration factor. However, if the deterioration factor supplied by the manufacturer is less than one, it shall be one for the purposes of this paragraph.

(iv) The emission values to compare with the standards (or family emission limits, as appropriate) shall be the adjusted emission values of paragraph (b)(4)(iii) of this section rounded to two significant figures in accordance with ASTM E 29–67 for each emission-data engine.

(5)(i) Paragraph (b)(5)(i) of this section applies only to manufacturers electing to participate in the particulate averaging program.

(A) If a manufacturer chooses to change the level of any family particulate emission limit(s), compliance with the new limit(s) must be based upon existing certification data.

(B) The production-weighted average of the family particulate emission limits of all applicable engine families, rounded to two significant figures in accordance with ASTM E 29–67, must comply with the particulate standards in § 86.088–9 (a)(1)(iv) or (d)(1)(iv), or the composite particulate standard as defined in § 86.085–2, as appropriate, at the end of the product year.

(ii) Paragraph (b)(5)(ii) of this section applies only to manufacturers electing to participate in the NO_X averaging program.

(A) If a manufacturer chooses to change the level of any family NO_X emission limit(s), compliance with the new limit(s) must be based upon existing certification data.

(B) The production-weighted average of the family NO_X emission limits of all applicable engine families, rounded to two significant figures in accordance with ASTM E 29–67, must comply with the NO_X emission standards of § 86.088–9(a)(1)(iii) (A) or (B), or of § 86.088–9(d)(1)(iii) (A) or (B), or the composite NO_X standard as defined in § 86.088–2, at the end of the product year.

(6) The procedure to determine the compliance of new motor vehicles in the Alternative Durability Program (described in § 86.085–13) is the same as described in paragraph (b)(4)(iv), (b)(7)(iv) and (b)(8) of this section. For the engine families that are included in the Alternative Durability Program, the exhause emission deterioration factors used to determine compliance shall be those that the Administrator has approved under § 86.085–13(c). The evaporative emission deterioration factor for each evaporative emission family shall be determined and applied according to paragraph (b)(7) of this section. The procedures to determine the minimum exhaust emissions deterioration factors required under § 86.085–13(d) are as follows:

(i) Separate deterioration factors shall be determined from the exhaust emission results of the durability-data vehicles for each engine family group. A separate factor shall be established for exhaust HC, exhaust THCE or exhaust NMHC as appropriate, and exhaust CO and exhaust NO_X for each engine family group. The evaporative emission deterioration factor for each evaporative family will be determined

and applied in accordance with paragraph (b)(6) of this section.

(ii) The deterioration factors for each engine family group shall be determined by the Administrator using historical durability data from as many as three previous model years. These data will consist of deterioration factors generated by durability-data vehicles representing certified engine families and of deterioration factors from vehicles selected under § 86.085–24(h). The Administrator shall determine how these data will be combined for each engine family group.

(A) The test results to be used in the calculations of each deterioration factor to be combined for each engine family group shall be those test results specified in paragraph (a)(4)(i)(A) of this section.

(B) For each durability-data vehicle selected under § 86.085–24(h), all applicable exhaust emission results shall be plotted as a function of the mileage on the system rounded to the nearest mile, and the best fit straight lines, fitted by the method of least squares, shall be drawn through all these data points. The exhaust deterioration factor for each durability-data vehicle shall be calculated as specified in paragraph (a)(4)(i)(B) of this section.

(C) *Line crossing.* For the purposes of paragraph (b)(5) of this section, line crossing occurs when either of the interpolated 4,000- and 120,000-mile points of the best fit straight line exceeds the applicable emission standard and at least one applicable data point exceeds the standard.

(*1*) The Administrator will not accept for certification line-crossing data from preproduction durability-data vehicles selected under § 86.085–24(c)(1), or § 86.085–24 (h)(2) or (h)(3).

(*2*) The Administrator will not accept for certification line-crossing data from production durability-data vehicles selected under § 86.085–24(h)(1) unless the 4,000-mile test result multiplied by the engine family group deterioration factor does not exceed the applicable emission standard. The deterioration factors used for this purpose shall be those that were used in the certification of the production vehicle. Manufacturers may calculate this product immediately after the 4,000-mile test of the vehicle. If the product exceeds the applicable standard, the manufacturer may, with the approval of the Administrator, discontinue the vehicle and substitute a new vehicle. The manufacturer may continue the original vehicle, but the data will not be acceptable if line crossing occurs.

(7)(i) Paragraph (b)(7) of this section describes the procedure for determining compliance of a new vehicle with fuel evaporative emission standards. The procedure described here shall be used for all vehicles in all model years.

(ii) The manufacturer shall determine, based on testing described in § 86.091–21(b)(4)(i), and supply an evaporative emission deterioration factor for each evaporative emission family-evaporative emission control system combination. The factor shall be calculated by subtracting the emission level at the selected test point from the emission level at the useful life point.

(iii) The official evaporative emission test results for each evaporative emission-data vehicle at the selected test point shall be adjusted by the addition of the appropriate deterioration factor. However, if the deterioration factor supplied by the manufacturer is less than zero, it shall be zero for the purposes of this paragraph.

(iv) The emission value to compare with the standards shall be the adjusted emission value of paragraph (b)(7)(iii) of this section rounded to two significant figures in accordance with ASTM E 29–67 for each evaporative emission-data vehicle.

(8) Every test vehicle of an engine family must comply with all applicable standards (and family emission limits, as appropriate), as determined in paragraphs (b)(4)(iv) and (b)(7)(iv) of this section, before any vehicle in that family will be certified.

(c)(1) Paragraph (c) of this section applies to heavy-duty engines.

(2) The exhaust emission standards (or family emission limits, as appropriate) for Otto-cycle engines in § 86.090–10 or for diesel engines in § 86.091–11 apply to the emissions of engines for their useful life.

(3) Since emission control efficiency generally decreases with the accumulation of service on the engine, deterioration factors will be used in combination with emission-data engine test results as the basis for determining compliance with the standards.

(4)(i) Paragraph (c)(4) of this section describes the procedure for determining compliance of an engine with emission standards (or family emission limits, as appropriate), based on deterioration factors supplied by the manufacturer.

(ii) Separate exhaust emission deterioration factors, determined from tests of engines, subsystems or components conducted by the manufacturer, shall be supplied for each engine-system combination. For Otto-cycle engines, separate factors shall be established for transient HC, THCE or NMHC as appropriate, CO and NO_X; and idle CO, for those engines utilizing aftertreatment technology (e.g., catalytic converters). For diesel engines, separate factors shall be established for transient HC, THCE or NMHC as appropriate, CO, NO_X and exhaust particulate. For diesel smoke testing, separate factors shall also be established for the acceleration mode (designated as ''A''), the lugging mode (designated as ''B''), and peak opacity (designated as ''C'').

(iii)(A) Paragraph (c)(4)(iii)(A) of this section applies to Otto-cycle heavy-duty engines.

(*1*) *Otto-cycle heavy-duty engines not utilizing aftertreatment technology (e.g., catalytic converters).* For transient HC, THCE or NMHC as appropriate, CO and NO_X, the official exhaust emission results for each emission-data engine at the selected test point shall be adjusted by the addition of the appropriate deterioration factor. However, if the deterioration factor supplied by the manufacturer is less than zero, it shall be zero for the purposes of this paragraph.

(*2*) *Otto-cycle heavy-duty engines utilizing aftertreatment technology (e.g., catalytic converters).* For transient HC, THCE or NMHC as appropriate, CO and NO_X, and for idle CO, the official exhaust emission results for each emission-data engine at the selected test point shall be adjusted by multiplication by the appropriate deterioration factor. However, if the deterioration factor supplied by the manufacturer is less than one, it shall be one for the purposes of this paragraph.

(B) Paragraph (c)(4)(iii)(B) of this section applies to diesel heavy-duty engines.

(*1*) *Diesel heavy-duty engines not utilizing aftertreatment technology (e.g., particulate traps).* For transient HC, THCE or NMHC as appropriate, CO, NO_X and exhaust particulate, the official exhaust emission results for each emission-data engine at the selected test point shall be adjusted by the addition of the appropriate deterioration factor. However, if the deterioration factor supplied by the manufacturer is less than zero, it shall be zero for the purposes of this paragraph.

(*2*) *Diesel heavy-duty engines utilizing aftertreatment technology (e.g., particulate traps).* For transient HC, THCE or NMHC as appropriate, CO, NO_X and exhaust particulate, the official exhaust emission results for each emission-data engine at the selected test point shall be adjusted by multiplication by the appropriate deterioration factor. However, if the deterioration factor supplied by the manufacturer is less than one, it shall be one for the purposes of this paragraph.

(*3*) *Diesel heavy-duty engines only.* For acceleration smoke (''A''), lugging smoke (''B''), and peak smoke (''C''), the official exhaust emission results for each emission-data engine at the selected test point shall be adjusted by the addition of the appropriate deterioration factor. However, if the deterioration factor supplied by the manufacturer is less than zero, it shall be zero for the purposes of this paragraph.

(iv) The emission values to compare with the standards (or family emission limits, as appropriate) shall be the adjusted emission values of paragraph (c)(4)(iii) of this section, rounded to the same number of significant figures as contained in the applicable standard in accordance with ASTM E 29–67, for each emission-data engine.

(5)–(6) [Reserved]

(7) Every test engine of an engine family must comply with all applicable standards (or family emission limits, as appropriate), as determined in paragraph (c)(4)(iv) of this section, before

any engine in that family will be certified.

(d)(1) Paragraph (d) of this section applies to heavy-duty vehicles required to comply with evaporative emission standards.

(2) The applicable evaporative emission standard in §86.091–10 or §86.091–11 applies to the emissions of vehicles for their useful life.

(3)(i) For vehicles with a GVWR of up to 26,000 pounds, because it is expected that emission control efficiency will change during the useful life of the vehicle, an evaporative emission deterioration factor shall be determined from the testing described in §86.088–23(b)(3) for each evaporative emission family-evaporative emission control system combination to indicate the evaporative emission control system deterioration during the useful life of the vehicle (minimum 50,000 miles). The factor shall be established to a minimum of two places to the right of the decimal.

(ii) For vehicles with a GVWR of greater than 26,000 pounds, because it is expected that emission control efficiency will change during the useful life of the vehicle, each manufacturer's statement as required in §86.088–23(b)(4)(ii) shall include, in accordance with good engineering practice, consideration of control system deterioration.

(4) The evaporative emission test results, if any, shall be adjusted by the addition of the appropriate deterioration factor: *Provided,* That if the deterioration factor as computed in paragraph (d)(3) of this section is less than zero, that deterioration factor shall be zero for the purposes of this paragraph.

(5) The emission level to compare with the standard shall be the adjusted emission level of paragraph (d)(4) of this section. Before any emission value is compared with the standard, it shall be rounded, in accordance with ASTM E 29–67, to two significant figures. The rounded emission values may not exceed the standard.

(6) Every test vehicle of an evaporative emission family must comply with the evaporative emission standard, as determined in paragraph (d)(5) of this section, before any vehicle in that family may be certified.

(e) Unless a manufacturer develops specific cold temperature deterioration factors, 68–86 °F deterioration factors shall be used to determine compliance with cold temperature emission standards.

(Secs. 202, 203, 206, 207, 208, 301a, Clean Air Act, as amended; 42 U.S.C. 7521, 7522, 7525, 7541, 7542, 7601a)

[50 FR 10669, Mar. 15, 1985, as amended at 51 FR 24609, July 7, 1986; 54 FR 14484, Apr. 11, 1989; 57 FR 31897, July 17, 1992; 59 FR 48493, Sept. 21, 1994]

§86.091–29 Testing by the Administrator.

(a)(1) Paragraph (a) of this section applies to light-duty vehicles and light-duty trucks.

(2) The Administrator may require that any one or more of the test vehicles be submitted to him, at such place or places as he may designate, for the purposes of conducting emissions tests. The Administrator may specify that he will conduct such testing at the manufacturer's facility, in which case instrumentation and equipment specified by the Administrator shall be made available by the manufacturer for test operations. Any testing conducted at a manufacturer's facility pursuant to this paragraph shall be scheduled by the manufacturer as promptly as possible.

(3)(i) Whenever the Administrator conducts a test segment on a test vehicle, the results of that test segment, unless subsequently invalidated by the Administrator, shall comprise the official data for that test segment for the vehicle at the prescribed test point and the manufacturer's data for that test segment for that prescribed test point shall not be used in determining compliance with emission standards (or family emission limits, as appropriate). The Administrator may stop a test after any evaporative test segment and use as official data any valid results obtained up to that point in the test, as described in subpart B of this part.

(ii) Whenever the Administrator does not conduct a test on a test vehicle at a test point, the manufacturer's test data will be accepted as the official data for that point: *Provided,* That if the Administrator makes a determination based on testing under paragraph

(a)(2) of this section, that there is a lack of correlation between the manufacturer's test equipment and the test equipment used by the Administrator, no manufacturer's test data will be accepted for purposes of certification until the reasons for the lack of correlation are determined and the validity of the data is established by the manufacturer, *And further provided,* That if the Administrator has reasonable basis to believe that any test data submitted by the manufacturer is not accurate or has been obtained in violation of any provisions of this part, the Administrator may refuse to accept that data as the official data pending retesting or submission or further information. If the manufacturer conducts more than one test on a vehicle, as authorized under § 86.084–26 (a)(3)(i)(A) or (b)(4)(i)(A), the data from the last test in that series of tests on that vehicle, will constitute the official data.

(iii)(A)(*1*) The Administrator may adjust or cause to be adjusted any adjustable parameter of an emission-data vehicle or engine which the Administrator has determined to be subject to adjustment for certification and Selective Enforcement Audit testing in accordance with § 86.085–22(e)(1), to any setting within the physically adjustable range of that parameter, as determined by the Administrator in accordance with § 86.085–22(e)(3)(i), prior to the performance of any tests to determine whether such vehicle or engine conforms to applicable emission standards, including tests performed by the manufacturer under § 86.091–23(c)(1). However, if the idle speed parameter is one which the Administrator has determined to be subject to adjustment, the Administrator shall not adjust it to a setting which causes a higher engine idle speed than would have been possible within the physically adjustable range of the idle speed parameter on the engine before it accumulated any dynamometer service, all other parameters being identically adjusted for the purpose of the comparison. The Administrator, in making or specifying such adjustments, will consider the effect of the deviation from the manufacturer's recommended setting on emissions performance characteristics as well as the likelihood that similar settings will occur on in-use light-duty vehicles or light-duty trucks. In determining likelihood, the Administrator will consider factors such as, but not limited to, the effect of the adjustment on vehicle performance characteristics and surveillance information from similar in-use vehicles.

(*2*) For those vehicles or engine parameters which the Administrator has not determined to be subject to adjustment during certification and Selective Enforcement Audit testing in accordance with § 86.085–22(e)(1), the emission-data vehicle presented to the Administrator for testing shall be calibrated within the production tolerances applicable to the manufacturer's specifications to be shown on the vehicle label (see § 86.091–35 (a)(1)(iii)(D) or (a)(2)(iii)(D)) as specified in the application for certification. If the Administrator determines that a vehicle is not within such tolerances, the vehicle will be adjusted, at the facility designated by the Administrator, prior to the test and an engineering report shall be submitted to the Administrator describing the corrective action taken. Based on the engineering report, the Administrator will determine if the vehicle will be used as an emission-data vehicle.

(B) If the Administrator determines that the test data developed on an emission-data vehicle under paragraph (a)(3)(i) of this section would cause that vehicle to fail due to excessive 4,000-mile emissions or by application of the appropriate deterioration factor, then the following procedure shall be observed:

(*1*) The manufacturer may request a retest. Before the retest, those vehicle or engine parameters which the Administrator has not determined to be subject to adjustment for certification and Selective Enforcement Audit testing in accordance with § 86.085–22(e)(1) may be readjusted to manufacturer's specification, if these adjustments were made incorrectly prior to the first test. The Administrator may adjust or cause to be adjusted any parameter which the Administrator has determined to be subject to adjustment to any setting within the physically adjustable range of that parameter, as determined by the Administrator in accordance with

§ 86.085–22(e)(3)(i). Other maintenance or repairs may be performed in accordance with § 86.088–25. All work on the vehicle shall be done at such location and under such conditions as the Administrator may prescribe.

(*2*) The vehicle will be retested by the Administrator and the results of this test shall comprise the official data for the emission-data vehicle.

(iv) If sufficient durability data are not available at the time of any emission test conducted under paragraph (a)(2) of this section to enable the Administrator to determine whether an emission-data vehicle would fail, the manufacturer may request a retest in accordance with the provisions of paragraphs (a)(3)(iii) (A) and (B) of this section. If the manufacturer does not promptly make such request, he shall be deemed to have waived the right to a retest. A request for retest must be made before the manufacturer removes the vehicle from the test premises.

(b)(1) Paragraph (b) of this section applies to heavy-duty engines.

(2) The Administrator may require that any one or more of the test engines be submitted to him, at such place or places as he may designate, for the purpose of conducting emissions tests. The Administrator may specify that he will conduct such testing at the manufacturer's facility, in which case instrumentation and equipment specified by the Administrator shall be made available by the manufacturer for test operations. Any testing conducted at a manufacturer's facility pursuant to this paragraph shall be scheduled by the manufacturer as promptly as possible.

(3)(i) Whenever the Administrator conducts a test on a test engine the results of that test, unless subsequently invalidated by the Administrator, shall comprise the official data for the engine at that prescribed test point and the manufacturer's data for that prescribed test point shall not be used in determining compliance with emission standards (or family emission limits, as appropriate).

(ii) Whenever the Administrator does not conduct a test on a test engine at a test point, the manufacturer's test data will be accepted as the official data for that test point: *Provided,* That if the Administrator makes a determination based on testing under paragraph (b)(2) of this section, that there is a lack of correlation between the manufacturer's test equipment and the test equipment used by the Administrator, no manufacturer's test data will be accepted for purposes of certification until the reasons for the lack of correlation are determined and the validity of the data is established by the manufacturer, *And further provided,* That if the Administrator has reasonable basis to believe that any test data submitted by the manufacturer is not accurate or has been obtained in violation of any provision of this part, the Administrator may refuse to accept that data as the official data pending retesting or submission of further information.

(iii)(A)(*1*) The Administrator may adjust or cause to be adjusted any adjustable parameter of an emission-data engine which the Administrator has determined to be subject to adjustment for certification testing in accordance with § 86.085–22(e)(1), to any setting within the physically adjustable range of that parameter, as determined by the Administrator in accordance with § 86.085–22(e)(3)(i), prior to the performance of any tests to determine whether such engine conforms to applicable emission standards, including tests performed by the manufacturer under § 86.088–23(c)(2). The Administrator, in making or specifying such adjustments, may consider the effect of the deviation from the manufacturer's recommended setting on emissions performance characteristics as well as the likelihood that similar settings will occur on in-use heavy-duty engines. In determining likelihood, the Administrator may consider factors such as, but not limited to, the effect of the adjustment on engine performance characteristics and surveillance information from similar in-use engines.

(*2*) For those engine parameters which the Administrator has not determined to be subject to adjustment for certification testing in accordance with § 86.085–22(e)(1), the emission-data engine presented to the Administrator for testing shall be calibrated within the production tolerances applicable to the manufacturer's specifications to be

shown on the engine label (see § 86.091–35(a)(3)(iii)) as specified in the application for certification. If the Administrator determines that an engine is not within such tolerances, the engine shall be adjusted at the facility designated by the Administrator prior to the test and an engineering report shall be submitted to the Administrator describing the corrective action taken. Based on the engineering report, the Administrator will determine if the engine shall be used as an emission-data engine.

(B) If the Administrator determines that the test data developed under paragraph (b)(3)(iii)(A) of this section would cause the emission-data engine to fail due to excessive 125-hour emission values or by the application of the appropriate deterioration factor, then the following procedure shall be observed:

(*1*) The manufacturer may request a retest. Before the retest, those engine parameters which the Administrator has not determined to be subject to adjustment for certification testing in accordance with § 86.085–22(e)(1) may be readjusted to the manufacturer's specifications, if these adjustments were made incorrectly prior to the first test. The Administrator may adjust or cause to be adjusted any parameter which the Administrator has determined to be subject to adjustment in accordance with § 86.085–22(e)(3)(i). However, if the idle speed parameter is one which the Administrator has determined to be subject to adjustment, the Administrator shall not adjust it to a setting which causes a higher engine idle speed than would have been possible within the physically adjustable range of the idle speed parameter on the engine before it accumulated any dynamometer service, all other parameters being identically adjusted for the purpose of the comparison. Other maintenance or repairs may be performed in accordance with § 86.088–25. All work on the vehicle shall be done at such location and under such conditions as the Administrator may prescribe.

(*2*) The engine will be retested by the Administrator and the results of this test shall comprise the official data for the emission-data engine.

(iv) If sufficient durability data are not available at the time of any emission test conducted under paragraph (b)(2) of this section to enable the Administrator to determine whether an emission-data engine would fail, the manufacturer may request a retest in accordance with the provisions of paragraph (b)(3)(iii)(B) (1) and (2) of this section. If the manufacturer does not promptly make such request, he shall be deemed to have waived the right to a retest. A request for retest must be made before the manufacturer removes the engine from the test premises.

(c)(1) Paragraph (c) of this section applies to gasoline-fueled and methanol-fueled heavy-duty vehicles.

(2) The Administrator may require that any one or more of the evaporative emission family-system combinations included in the manufacturer's statement(s) of compliance be installed on an appropriate vehicle and such vehicle be submitted to him, at such place or places as he may designate, for the purpose of conducting emissions tests. The Administrator may specify that he will conduct such testing at the manufacturer's facility, in which case instrumentation and equipment specified by the Administrator shall be made available by the manufacturer for test operations. Any testing conducted at a manufacturer's facility pursuant to this paragraph shall be scheduled by the manufacturer as promptly as possible.

(3)(i) Whenever the Administrator conducts a test segment on an evaporative emission family-system combination, the results of that test segment, unless subsequently invalidated by the Administrator, shall comprise the official data for that test segment for the evaporative emission family-system combination, and the manufacturer's data, analyses, etc., for that test segment shall not be used in determining compliance with emission standards. The Administrator may stop a test after any evaporative test segment and use as official data any valid results obtained up to that point in the test, as described in subpart B of this part.

(ii) Whenever the Administrator does not conduct a test on an evaporative emission family-system combination,

the manufacturer's test data will be accepted as the official data: *Provided,* That if the Administrator makes a determination, based on testing under paragraph (c)(2) of this section, that there is a lack of correlation between the manufacturer's test equipment and the test equipment used by the Administrator, no manufacturer's test data will be accepted for purposes of certification until the reasons for the lack of correlation are determined and the validity of the data is established by the manufacturer, *And further provided,* That if the Administrator has reasonable basis to believe that any test data, analyses, or other information submitted by the manufacturer is not accurate or has been obtained in violation of any provision of this part, the Administrator may refuse to accept those data, analyses, etc., as the official data pending retesting or submission of further information.

(Secs. 202, 203, 206, 207, 208, 301a, Clean Air Act, as amended; 42 U.S.C. 7521, 7522, 7525, 7541, 7542, 7601a)

[50 FR 10675, Mar. 15, 1985, as amended at 54 FR 14488, Apr. 11, 1989; 58 FR 16020, Mar. 24, 1993]

§86.091–30 Certification.

(a)(1)(i) If, after a review of the test reports and data submitted by the manufacturer, data derived from any inspection carried out under §86.091–7(d), and any other pertinent data or information, the Administrator determines that a test vehicle(s) (or test engine(s)) meets(s) the requirements of the Act and of this subpart, he will issue a certificate of conformity with respect to such vehicles(s) (or engines(s)) except in cases covered by paragraphs (a)(1)(ii) and (c) of this section.

(ii) *Gasoline-fueled and methanol-fueled heavy-duty vehicles.* If, after a review of the statement(s) of compliance submitted by the manufacturer under §86.091–23(b)(4) and any other pertinent data or information, the Administrator determines that the requirements of the Act and this subpart have been met, he will issue one certificate of conformity per manufacturer with respect to the evaporative emission family(s) covered by such statement(s) except in cases covered by paragraph (c) of this section.

(2) Such certificate will be issued for such period not to exceed one model year as the Administrator may determine and upon such terms as he may deem necessary or appropriate to assure that any new motor vehicle (or new motor vehicle engine) covered by the certificate will meet the requirements of the Act and of this part.

(3)(i) One such certificate will be issued for each engine family. For gasoline-fueled and methanol fueled light-duty vehicles and light-duty trucks, one such certificate will be issued for each engine family evaporative emission family combination.

(A) *Light-duty vehicles.* Each certificate will certify compliance with no more than one set of standards (or family emission limits, as appropriate).

(B) *Light-duty trucks.* Each certificate will certify compliance with no more than one set of standards (or family emission limits, as appropriate), except for low-altitude standards and high altitude standards. The certificate shall state that it covers vehicles sold or delivered to an ultimate purchaser for principal use at a designated high-altitude location only if the vehicle conforms in all material respects to the design specifications that apply to those vehicles described in the application for certification at high altitude.

(ii) For gasoline-fueled and methanol fueled heavy-duty vehicles, one such certificate will be issued for each manufacturer and will certify compliance for those vehicles previously identified in that manufacturer's statement(s) of compliance as required in §86.091–23(b)(4) (i) and (ii).

(iii) For diesel light-duty vehicles and light-duty trucks, or diesel heavy-duty engines, included in the applicable particulate averaging program, the manufacturer may at any time during production elect to change the level of any family particulate emission limit by demonstrating compliance with the new limit as described in §§86.091–28(a)(6) and 86.091–28(b)(5)(i). New certificates issued under this paragraph will be applicable only for vehicles (or engines) produced subsequent to the date of issuance.

(iv) For light-duty trucks or heavy-duty engines included in the applicable NO_X averaging program, the manufacturer may at any time during production elect to change the level of any family NO_X emission limit by demonstrating compliance with the new limit as described in § 86.091–28(b)(5)(ii). New certificates issued under this paragraph will be applicable only for vehicles (or engines) produced subsequent to the day of issue.

(4)(i) The adjustment or modification of any light-duty truck in accordance with instructions provided by the manufacturer for the altitude where the vehicle is principally used will not be considered a violation of section 203(a)(3) of the Clean Air Act.

(ii) A violation of section 203(a)(1) of the Clean Air Act occurs when a manufacturer sells or delivers to an ultimate purchaser any light-duty vehicle or light-duty truck, subject to the regulations under the Act, under any of the conditions specified in the remainder of this paragraph.

(A) When a light-duty vehicle or light-duty truck is not configured to meet high-altitude requirements:

(*1*) At a designated high-altitude location, unless such manufacturer has reason to believe that such vehicle will not be sold to an ultimate purchaser for principal use at a designated high-altitude location; or

(*2*) At a location other than a designated high-altitude location, when such manufacturer has reason to believe that such motor vehicle will be sold to an ultimate purchaser for principal use at a designated high-altitude location.

(B) When a light-duty vehicle is not configured to meet low-altitude requirements, as provided in § 86.087–8(i):

(*1*) At a designated low-altitude location, unless such manufacturer has reason to believe that such vehicle will not be sold to an ultimate purchaser for principal use at a designated low-altitude location; or

(*2*) At a location other than a designated low-altitude location, when such manufacturer has reason to believe that such motor vehicle will be sold to an ultimate purchaser for principal use at a designated low-altitude location.

(iii) A manufacturer shall be deemed to have reason to believe that a light-duty vehicle that has been exempted from compliance with emission standards at high-altitude, or a light-duty truck which is not configured to meet high-altitude requirements, will not be sold to an ultimate purchaser for principal use at a designated high-altitude location if the manufacturer has informed its dealers and field representatives about the terms of these high-altitude regulations, has not caused the improper sale itself, and has taken reasonable action which shall include, but not be limited to, either paragraph (a)(4)(iii) (A) or (B), and (a)(4)(ii)(C) of this section:

(A) Requiring dealers in designated high-altitude locations to submit written statements to the manufacturer signed by the ultimate purchaser that a vehicle which is not configured to meet high-altitude requirements will not be used principally at a designated high-altitude location; requiring dealers in counties contiguous to designated high-altitude locations to submit written statements to the manufacturer, signed by the ultimate purchaser who represents to the dealer in the normal course of business that he or she resides in a designated high-altitude location, that a vehicle which is not configured to meet high-altitude requirements will not be used principally at a designated high-altitude location; and for each sale or delivery of fleets of ten or more such vehicles in a high-altitude location or in counties contiguous to high-altitude locations, requiring either the selling dealer or the delivering dealer to submit written statements to the manufacturer, signed by the ultimate purchaser who represents to the dealer in the normal course of business that he or she resides in a designated high-altitude location, that a vehicle which is not configured to meet high-altitude requirements will not be used principally at a designated high-altitude location. In addition, the manufacturer will make available to EPA, upon reasonable written request (but not more frequently than quarterly, unless EPA has demonstrated that it has substantial reason to believe that an improperly configured vehicle has been sold), sales,

warranty, or other information pertaining to sales of vehicles by the dealers described above maintained by the manufacturer in the normal course of business relating to the altitude configuration of vehicles and the locations of ultimate purchasers; or

(B) Implementing a system which monitors factory orders of low-altitude vehicles by high-altitude dealers, or through other means, identifies dealers that may have sold or delivered a vehicle not configured to meet the high-altitude requirements to an ultimate purchaser for principal use at a designated high-altitude location; and making such information available to EPA upon reasonable written request (but not more frequently than quarterly, unless EPA has demonstrated that it has substantial reason to believe that an improperly configured vehicle has been sold); and

(C) Within a reasonable time after receiving written notice from EPA or a State or local government agency that a dealer may have improperly sold or delivered a vehicle not configured to meet the high-altitude requirements to an ultimate purchaser residing in a designated high-altitude location, or based on information obtained pursuant to paragraph (a)(4)(iii) of this section that a dealer may have improperly sold or delivered a significant number of such vehicles to ultimate purchasers so residing, reminding the dealer in writing of the requirements of these regulations, and, where appropriate, warning the dealer that sale by the dealer of vehicles not configured to meet high-altitude requirements may be contrary to the terms of its franchise agreement with the manufacturer and the dealer certification requirements of §85.2108 of this chapter.

(iv) A manufacturer shall be deemed to have reason to believe that a light-duty vehicle which has been exempted from compliance with emission standards at low-altitude, as provided in §86.087–8(i), will not be sold to an ultimate purchaser for principal use at a designated low-altitude location if the manufacturer has informed its dealers and field representatives about the terms of the high-altitude regulations, has not caused the improper sale itself, and has taken reasonable action which shall include, but not be limited to, either paragraph (a)(4)(iv) (A) or (B), and (a)(4)(iv)(C) of this section:

(A) Requiring dealers in designated low-altitude locations to submit written statements to the manufacturer signed by the ultimate purchaser that a vehicle which is not configured to meet low-altitude requirements will not be used principally at a designated low-altitude location; requiring dealers in counties contiguous to designated low-altitude locations to submit written statements to the manufacturer, signed by the ultimate purchaser who represents to the dealer in the normal course of business that he or she resides in a designated low-altitude location, that a vehicle which is not configured to meet low-altitude requirements will not be used principally at a designated low-altitude location; and for each sale or delivery of fleets of ten or more such vehicles in a low-altitude location or in counties contiguous to low-altitude locations, requiring either the selling dealer or the delivering dealer to submit written statements to the manufacturer, signed by the ultimate purchaser who represents to the dealer in the normal course of business that he or she resides in a designated low-altitude location, that a vehicle which is not configured to meet low-altitude requirements will not be used principally at a designated high-altitude location. In addition, the manufacturer will make available to EPA, upon reasonable written request (but not more frequently than quarterly, unless EPA has demonstrated that it has substantial reason to believe that an improperly configured vehicle has been sold), sales, warranty, or other information pertaining to sales of vehicles by the dealers described above maintained by the manufacturer in the normal course of business relating to the altitude configuration of vehicles and the locations of ultimate purchasers; or

(B) Implementing a system which monitors factory orders of high-altitude vehicles by low-altitude dealers, or through other means, identifies dealers that may have sold or delivered a vehicle not configured to meet the low-altitude requirements to an ultimate purchaser for principal use at a

designated low-altitude location; and making such information available to EPA upon reasonable written request (but not more frequently than quarterly, unless EPA has demonstrated that it has substantial reason to believe that an improperly configured vehicle has been sold); and

(C) Within a reasonable time after receiving written notice from EPA or a state or local government agency that a dealer may have improperly sold or delivered a vehicle not configured to meet the low-altitude requirements to an ultimate purchaser residing in a designated low-altitude location, or based on information obtained pursuant to paragraph (a)(4)(iv) of this section that a dealer may have improperly sold or delivered a significant number of such vehicles to ultimate purchasers so residing, reminding the dealer in writing of the requirements of these regulations, and, where appropriate, warning the dealer that sale by the dealer of vehicles not configured to meet low-altitude requirements may be contrary to the terms of its franchise agreement with the manufacturer and the dealer certification requirements of § 85.2108 of this chapter.

(5)(i) For the purpose of paragraph (a) of this section, a ''designated high-altitude location'' is any county which has substantially all of its area located above 1,219 meters (4,000 feet) and:

(A) Requested an extension past the attainment date of December 31, 1982, for compliance with either the National Ambient Air Quality Standards for carbon monoxide or ozone, as indicated in part 52 (Approval and Promulgation of Implementation Plans) of this title; or

(B) Is in the same state as a county designated as a high-altitude location according to paragraph (a)(5)(i)(A) of this section.

(ii) The designated high-altitude locations defined in paragraph (a)(5)(i) of this section are listed below:

STATE OF COLORADO

Adams
Alamosa
Arapahoe
Archuleta
Boulder
Chaffee
Cheyenne
Clear Creek
Conejos
Costilla
Crowley
Custer
Delta
Denver
Dolores
Douglas
Eagle
Elbert
El Paso
Fremont
Garfield
Gilpin
Grand
Gunnison
Hinsdale
Huerfano
Jackson
Jefferson
Kit Carson
Lake
La Plata
Larimer
Las Animas
Lincoln
Mesa
Mineral
Moffat
Montezuma
Montrose
Morgan
Otero
Ouray
Park
Pitkin
Pueblo
Rio Blanco
Rio Grande
Routt
Saguache
San Juan
San Miguel
Summit
Teller
Washington
Weld

STATE OF NEVADA

Carson City
Douglas
Elko
Esmeralda
Eureka
Humboldt
Lander
Lincoln
Lyon
Mineral
Nye
Pershing
Storey
Washoe
White Pine

STATE OF NEW MEXICO

Bernalillo
Catron
Colfax
Curry
De Baca
Grant
Guadalupe
Harding
Hidalgo
Lincoln
Los Alamos
Luna
McKinley
Mora
Otero
Rio Arriba
Roosevelt
Sandoval
San Juan
San Miguel
Santa Fe
Sierra
Socorro
Taos
Torrance
Union
Valencia

STATE OF UTAH

Beaver
Box Elder
Cache
Carbon
Daggett
Davis
Duchesne
Emery
Garfield
Grand
Iron
Juab
Kane
Millard
Morgan
Piute
Rich
Salt Lake
San Juan
Sanpete
Sevier
Summit
Tooele
Uintah
Utah
Wasatch
Wayne
Weber

(iii) For the purpose of paragraph (a) of this section, a ''designated low-altitude location'' is any county which has substantially all of its area located below 1,219 meters (4,000 feet).

(iv) The designated low-altitude locations so defined include all counties in the United States which are not listed in eithir paragraph (a)(5)(ii) of this section or in the list below:

STATE OF ARIZONA

Apache	Navajo
Cochise	Yavapai
Coconino	

STATE OF IDAHO

Bannock	Franklin
Bear Lake	Fremont
Bingham	Jefferson
Blaine	Lemhi
Bonneville	Madison
Butte	Minidoka
Camas	Oneida
Caribou	Power
Cassia	Treton
Clark	Valley
Custer	

STATE OF MONTANA

Beaverhead	Meagher
Deer Lodge	Park
Gallatin	Powell
Jefferson	Silver Bow
Judith Basin	Wheatland
Madison	

STATE OF NEBRASKA

Banner	Kimball
Cheyenne	Sioux

STATE OF OREGON

Harney	Lake
Klamath	

STATE OF TEXAS

Jeff Davis	Parmer
Hudspeth	

STATE OF WYOMING

Albany	Natrona
Campbell	Niobrara
Carbon	Park
Converse	Platte
Fremont	Sublette
Goshen	Sweetwater
Hot Springs	Teton
Johnson	Uinta
Laramie	Washakie
Lincoln	Weston

(6) Catalyst-equipped vehicles, otherwise covered by a certificate, which are driven outside the United States, Canada, and Mexico will be presumed to have been operated on leaded gasoline resulting in deactivation of the catalysts. If these vehicles are imported or offered for importation without retrofit of the catalyst, they will be considered not to be within the coverage of the certificate unless included in a catalyst control program operated by a manufacturer or a United States Government agency and approved by the Administrator.

(7) For incomplete light-duty trucks, a certificate covers only those new motor vehicles which, when completed by having the primary load-carrying device or container attached, conform to the maximum curb weight and frontal area limitations described in the application for certification as required in § 86.091–21(d).

(8) For heavy-duty engines, a certificate covers only those new motor vehicle engines installed in heavy-duty vehicles which conform to the minimum gross vehicle weight rating, curb weight, or frontal area limitations for heavy-duty vehicles described in § 86.082–2.

(9) For incomplete gasoline-fueled and methanol-fueled heavy-duty vehicles a certificate covers only those new motor vehicles which, when completed, conform to the nominal maximum fuel tank capacity limitations as described in the application for certification as required in § 86.091–21(e).

(10)(i) For diesel light-duty vehicle and diesel light-duty truck families which are included in a particulate averaging program, the manufacturer's production-weighted average of the particulate emission limits of all engine families in a participating class or classes shall not exceed the applicable diesel particulate standard, or the composite particulate standard defined in § 86.090–2 as appropriate, at the end of the model year, as determined in accordance with 40 CFR part 86. The certificate shall be void *ab initio* for those vehicles causing the production-weighted FEL to exceed the particulate standard.

(ii) For all heavy-duty diesel engines which are included in the particulate averaging, trading, or banking programs under § 86.091–15:

(A) All certificates issued are conditional upon the manufacturer complying with the provisions of § 86.091–15 and the averaging, trading, and banking related provision of other applicable sections, both during and after the model year production.

(B) Failure to comply with all provisions of § 86.091–15 will be considered to be a failure to satisfy the conditions upon which the certificate was issued, and the certificate may be deemed void *ab initio*.

(C) The manufacturer shall bear the burden of establishing to the satisfaction of the Administrator that the conditions upon which the certificate was issued were satisfied or excused.

(b)(1) The Administrator will determine whether a vehicle (or engine) covered by the application complies with applicable standards (or family emission limits, as appropriate) by observing the following relationships:

(i) *Light-duty vehicles.* (A) The durability data vehicle(s) selected under § 86.090–24(c)(1)(i) shall represent all vehicles of the same engine system combination.

(B) The emission data vehicle(s) selected under § 86.090–24(b)(1) (ii) through (iv) shall represent all vehicles of the same engine-system combination as applicable.

(C) The emission-data vehicle(s) selected under § 86.090–24(b)(l)(vii) (A) and (B) shall represent all vehicles of the same evaporative control system within the evaporative family.

(ii) *Light-duty trucks.* (A) The emission-data vehicle(s) selected under § 86.090–24(b)(1)(ii), shall represent all vehicles of the same engine-system combination as applicable.

(B) The emission-data vehicle(s) selected under § 86.090–24(b)(1)(vii) (A) and (B) shall represent all vehicles of the same evaporative control system within the evaporative family.

(C) The emission-data vehicle(s) selected under § 86.090–24(b)(1)(v) shall represent all vehicles of the same engine-system combination as applicable.

(D) The emission-data vehicle(s) selected under § 86.090–24(b)(1)(viii) shall represent all vehicles of the same evaporative control system within the evaporative emission family, as applicable.

(iii) *Heavy-duty engines.* (A) An Otto-cycle emission-data test engine selected under § 86.090–24(b)(2)(iv) shall represent all engines in the same family of the same engine displacement-exhaust emission control system combination.

(B) An Otto-cycle emission-data test engine selected under § 86.090–24(b)(2)(iii) shall represent all engines in the same engine family of the same engine displacement-exhaust emission control system combination.

(C) A diesel emission data test engine selected under § 86.090–24(b)(3)(ii) shall represent all engines in the same engine-system combination.

(D) A diesel emission-data test engine selected under § 86.090–24(b)(3)(iii) shall represent all engines of that emission control system at the rated fuel delivery of the test engine.

(iv) *Gasoline-fueled and methanol-fueled heavy-duty vehicles.* A statement of compliance submitted under § 86.091–23(b)(4) (i) or (ii) shall represent all vehicles in the same evaporative emission family-evaporative emission control system combination.

(2) The Administrator will proceed as in paragraph (a) of this section with respect to the vehicles (or engines) belonging to an engine family or engine family-evaporative emission family combination (as applicable), all of which comply with all applicable standards (or family emission limits, as appropriate).

(3) If after a review of the test reports and data submitted by the manufacturer, data derived from any additional testing conducted pursuant to § 86.090–29, data or information derived from any inspection carried out under § 86.091–7(d) or any other pertinent data or information, the Administrator determines that one or more test vehicles (or test engines) of the certification test fleet do not meet applicable standards (or family emission limits, as appropriate), he will notify the manufacturer in writing, setting forth the basis for his determination. Within 30 days following receipt of the notification, the manufacturer may request a hearing on the Administrator's determination. The request shall be in writing, signed by an authorized representative of the manufacturer and shall include a

statement specifying the manufacturer's objections to the Administrator's determination and data in support of such objections. If, after a review of the request and supporting data, the Administrator finds that the request raises a substantial factual issue, he shall provide the manufacturer a hearing in accordance with §86.078–6 with respect to such issue.

(4) For light-duty vehicles and light-duty trucks the manufacturer may, at its option, proceed with any of the following alternatives with respect to an emission-data vehicle determined not in compliance with all applicable standards (or family emission limits, as appropriate) for which it was tested:

(i) Request a hearing under §86.078–6; or

(ii) Remove the vehicle configuration (or evaporative vehicle configuration, as applicable) which failed, from his application;

(A) If the failed vehicle was tested for compliance with exhaust emission standards (or family emission limits, as appropriate) only: The Administrator may select, in place of the failed vehicle, in accordance with the selection criteria employed in selecting the failed vehicle, a new emission-data vehicle to be tested for exhaust emission compliance only.

(B) If the failed vehicle was tested for compliance with both exhaust and evaporative emission standards: The Administrator may select, in place of the failed vehicle, in accordance with the selection criteria employed in selecting the failed vehicle, a new emission-data vehicle which will be tested for compliance with both exhaust and evaporative emission standards. If one vehicle cannot be selected in accordance with the selection criteria employed in selecting the failed vehicle, then two vehicles may be selected (*i.e.*, one vehicle to satisfy the exhaust emission vehicle selection criteria and one vehicle to satisfy the evaporative emission vehicle selection criteria). The vehicle selected to satisfy the exhaust emission vehicle selection criteria will be tested for compliance with exhaust emission standards (or family emission limits, as appropriate) only. The vehicle selected to satisfy the evaporative emission vehicle selection criteria will be tested for compliance with both exhaust and evaporative emission standards; or

(iii) Remove the vehicle configuration (or evaporative vehicle configuration, as applicable) which failed from the application and add a vehicle configuration(s) (or evaporative vehicle configuration(s), as applicable) not previously listed. The Administrator may require, if applicable, that the failed vehicle be modified to the new engine code (or evaporative emission code, as applicable) and demonstrate by testing that it meets applicable standards (or family emission limits, as appropriate) for which it was originally tested. In addition, the Administrator may select, in accordance with the vehicle selection criteria given in §86.090–24(b), a new emission-data vehicle or vehicles. The vehicles selected to satisfy the exhaust emission vehicle selection criteria will be tested for compliance with exhaust emission standards (or family emission limits, as appropriate) only. The vehicles selected to satisfy the evaporative emission vehicle selection criteria will be tested for compliance with both exhaust and evaporative emission standards (or family emission limits, as appropriate); or

(iv) Correct a component or system malfunction and show that with a correctly functioning system or component the failed vehicle meets applicable standards (or family emission limits, as appropriate) for which it was originally tested. The Administrator may require a new emission-data vehicle, of identical vehicle configuration (or evaporative vehicle configuration, as applicable) to the failed vehicle, to be operated and tested for compliance with the applicable standards (or family emission limits, as appropriate) for which the failed vehicle was originally tested.

(5) For heavy-duty engines the manufacturer may, at his option, proceed with any of the following alternatives with respect to any engine family represented by a test engine(s) determined not in complinace with applicable standards (or family emission limit, as appropriate):

(i) Request a hearing under §86.078–6; or

(ii) Delete from the application for certification the engines represented by the failing test engine. (Engines so deleted may be included in a later request for certification under § 86.079–32.) The Administrator may then select in place of each failing engine an alternate engine chosen in accordance with selection criteria employed in selecting the engine that failed; or

(iii) Modify the test engine and demonstrate by testing that it meets applicable standards. Another engine which is in all material respects the same as the first engine, as modified, may then be operated and tested in accordance with applicable test procedures.

(6) If the manufacturer does not request a hearing or present the required data under paragraphs (b)(4) or (b)(5) of this section (as applicable) of this section, the Administrator will deny certification.

(c)(1) Notwithstanding the fact that any certification vehicle(s) (or certification engine(s)) may comply with other provisions of this subpart, the Administrator may withhold or deny the issuance of a certificate of conformity (or suspend or revoke any such certificate which has been issued) with respect to any such vehicle(s) (or engine(s)) if:

(i) The manufacturer submits false or incomplete information in his application for certification thereof;

(ii) The manufacturer renders inaccurate any test data which he submits pertaining thereto or otherwise circumvents the intent of the Act, or of this part with respect to such vehicle (or engine);

(iii) Any EPA Enforcement Officer is denied access on the terms specified in § 86.091–7(d) to any facility or portion thereof which contains any of the following:

(A) The vehicle (or engine):

(B) Any components used or considered for use in its modification or buildup into a certification vehicle (or certification engine);

(C) Any production vehicle (or production engine) which is or will be claimed by the manufacturer to be covered by the certificate;

(D) Any step in the construction of a vehicle (or engine) described in paragraph (c)(iii)(C) of this section;

(E) Any records, documents, reports, or histories required by this part to be kept concerning any of the above;

(iv) Any EPA Enforcement Officer is denied ''reasonable assistance'' (as defined in § 86.091–7(d) in examining any of the items listed in paragraph (c)(1)(iii) of this section.

(2) The sanctions of withholding, denying, revoking, or suspending of a certificate may be imposed for the reasons in paragraphs (c)(1)(i),(ii),(iii), or (iv) of this section only when the infraction is substantial.

(3) In any case in which a manufacturer knowingly submits false or inaccurate information or knowingly renders inaccurate or invalid any test data or commits any other fraudulent acts and such acts contribute substantially to the Administrator's decision to issue a certificate of conformity, the Administrator may deem such certificate void *ab initio.*

(4) In any case in which certification of a vehicle (or engine) is proposed to be withheld, denied, revoked, or suspended under paragraph (c)(1) (iii) or (iv) of this section, and in which the Administrator has presented to the manufacturer involved reasonable evidence that a violation of § 86.091–7(d) in fact occurred, the manufacturer, if he wishes to contend that, even though the violation occurred, the vehicle (or engine) in question was not involved in the violation to a degree that would warrant withholding, denial, revocation, or suspension of certification under either paragraph (c)(1) (iii) or (iv) of this section, shall have the burden of establishing that contention to the satisfaction of the Administrator.

(5) Any revocation or suspension of certification under paragraph (c)(1) of this section shall:

(i) Be made only after the manufacturer concerned has been offered an opportunity for a hearing conducted in accordance with § 86.078–6 hereof.

(ii) Extend no further than to forbid the introduction into commerce of vehicles (or engines) previously covered by the certification which are still in the hands of the manufacturer, except in cases of such fraud or other misconduct as makes the certification invalid *ab initio.*

(6) The manufacturer may request in the form and manner specified in paragraph (b)(3) of this section that any determination made by the Administrator under paragraph (c)(1) of this section to withhold or deny certification be reviewed in a hearing conducted in accordance with § 86.078–6. If the Administrator finds, after a review of the request and supporting data, that the request raises a substantial factual issue, he will grant the request with respect to such issue.

(d)(1) *For light-duty vehicles.* Notwithstanding the fact that any vehicle configuration or engine family may be covered by a valid outstanding certificate of conformity, the Administrator may suspend such outstanding certificate of conformity in whole or in part with respect to such vehicle configuration or engine family if:

(i) The manufacturer refuses to comply with the provisions of a test order issued by the Administrator pursuant to § 86.603; or

(ii) The manufacturer refuses to comply with any of the requirements of § 86.603; or

(iii) The manufacturer submits false or incomplete information in any report or information provided pursuant to the requirements of § 86.609; or

(iv) The manufacturer renders inaccurate any test data which he submits pursuant to § 86.609; or

(v) Any EPA Enforcement Officer is denied the opportunity to conduct activities related to entry and access as authorized in § 86.606 of this part and in a warrant or court order presented to the manufacturer or the party in charge of a facility in question; or

(vi) EPA Enforcement Officers are unable to conduct activities related to entry and access or to obtain ''reasonable assistance'' as authorized in § 86.606 of this part because a manufacturer has located its facility in a foreign jurisdiction where local law prohibits those activities; or

(vii) The manufacturer refuses to or in fact does not comply with §§ 86.604(a), 86.605, 86.607, 86.608, or 86.610.

(2) The sanction of suspending a certificate may not be imposed for the reasons in paragraph (d)(1)(i), (ii), or (vii) of this section where the refusal is caused by conditions and circumstances outside the control of the manufacturer which render it impossible to comply with those requirements.

(3) The sanction of suspending a certificate may be imposed for the reasons in paragraph (d)(1)(iii), (iv), or (v) of this section only when the infraction is substantial.

(4) In any case in which a manufacturer knowingly submitted false or inaccurate information or knowingly rendered inaccurate any test data or committed any other fraudulent acts, and such acts contributed substantially to the Administrator's original decision not to suspend or revoke a certificate of conformity in whole or in part, the Administrator may deem such certificate void from the date of such fraudulent act.

(5) In any case in which certification of a vehicle is proposed to be suspended under paragraph (d)(1)(v) of this section and in which the Administrator has presented to the manufacturer involved reasonable evidence that a violation of § 86.606 in fact occurred, if the manufacturer wishes to contend that, although the violation occurred, the vehicle configuration or engine family in question was not involved in the violation to a degree that would warrant suspension of certification under paragraph (d)(1)(v) of this section, the manufacturer shall have the burden of establishing the contention to the satisfaction of the Administrator.

(6) Any suspension of certification under paragraph (d)(1) of this section shall:

(i) Be made only after the manufacturer concerned has been offered an opportunity for a hearing conducted in accordance with § 86.614; and

(ii) Not apply to vehicles no longer in the hands of the manufacturer.

(7) Any voiding of a certificate of conformity under paragraph (d)(4) of this section will be made only after the manufacturer concerned has been offered an opportunity for a hearing conducted in accordance with § 86.614.

(e) *For light-duty trucks and heavy-duty engines.* (1) Notwithstanding the fact that any vehicle configuration or engine family may be covered by a

valid outstanding certificate of conformity, the Administrator may suspend such outstanding certificate of conformity in whole or in part with respect to such vehicle or engine configuration or engine family if:

(i) The manufacturer refuses to comply with the provisions of a test order issued by the Administrator pursuant to § 86.1003; or

(ii) The manufacturer refuses to comply with any of the requirements of § 86.1003; or

(iii) The manufacturer submits false or incomplete information in any report or information provided pursuant to the requirements of § 86.1009; or

(iv) The manufacturer renders inaccurate any test data submitted pursuant to § 86.1009; or

(v) Any EPA Enforcement Officer is denied the opportunity to conduct activities related to entry and access as authorized in § 86.1006 of this part and in a warrant or court order presented to the manufacturer or the party in charge of a facility in question; or

(vi) EPA Enforcement Officers are unable to conduct activities related to entry and access as authorized in § 86.1006 of this part because a manufacturer has located a facility in a foreign jurisdiction where local law prohibits those activities; or

(vii) The manufacturer refuses to or in fact does not comply with the requirements of §§ 86.1004(a), 86.1005, 86.1007, 86.1008, 86.1010, 86.1011, or 86.1013.

(2) The sanction of suspending a certificate may not be imposed for the reasons in paragraph (e)(1) (i), (ii), or (vii) of this section where such refusal or denial is caused by conditions and circumstances outside the control of the manufacturer which renders it impossible to comply with those requirements. Such conditions and circumstances shall include, but are not limited to, any uncontrollable factors which result in the temporary unavailability of equipment and personnel needed to conduct the required tests, such as equipment breakdown or failure or illness of personnel, but shall not include failure of the manufacturers to adequately plan for and provide the equipment and personnel needed to conduct the tests. The manufacturer will bear the burden of establishing the presence of the conditions and circumstances required by this paragraph.

(3) The sanction of suspending a certificate may be imposed for the reasons outlined in paragraph (e)(1) (iii), (iv), or (v) of this section only when the infraction is substantial.

(4) In any case in which a manufacturer knowingly submitted false or inaccurate information or knowingly rendered inaccurate any test data or committed any other fraudulent acts, and such acts contributed substantially to the Administrator's original decision not to suspend or revoke a certificate of conformity in whole or in part, the Administrator may deem such certificate void from the date of such fraudulent act.

(5) In any case in which certification of a light-duty truck or heavy-duty engine is proposed to be suspended under paragraph (e)(1)(v) of this section and in which the Administrator has presented to the manufacturer involved reasonable evidence that a violation of § 86.1006 in fact occurred, if the manufacturer wishes to contend that, although the violation occurred, the vehicle or engine configuration or engine family in question was not involved in the violation to a degree that would warrant suspension of certification under paragraph (e)(1)(v) of this section, he shall have the burden of establishing that contention to the satisfaction of the Administrator.

(6) Any suspension of certification under paragraph (e)(1) of this section shall:

(i) Be made only after the manufacturer concerned has been offered an opportunity for a hearing conducted in accordance with § 86.1014, and

(ii) Not apply to vehicles or engines no longer in the hands of the manufacturer.

(7) Any voiding of a certificate of conformity under paragraph (e)(4) of this section shall be made only after the manufacturer concerned has been

offered an opportunity for a hearing conducted in accordance with §86.1014.

(Secs. 202, 203, 206, 207, 208, 301a, Clean Air Act, as amended; 42 U.S.C. 7521, 7522, 7525, 7541, 7542, 7601a)

[50 FR 10682, Mar. 15, 1985, as amended at 54 FR 14493, Apr. 11, 1989; 55 FR 30625, July 26, 1990]

§86.091–35 Labeling.

(a) The manufacturer of any motor vehicle (or motor vehicle engine) subject to the applicable emission standards (and family emission limits, as appropriate) of this subpart, shall, at the time of manufacture, affix a permanent legible label, of the type and in the manner described below, containing the information hereinafter provided, to all production models of such vehicles (or engines) available for sale to the public and covered by a certificate of conformity under §86.091–30(a).

(1) *Light-duty vehicles.* (i) A permanent, legible label shall be affixed in a readily visible position in the engine compartment.

(ii) The label shall be affixed by the vehicle manufacturer who has been issued the certificate of conformity for such vehicle, in such a manner that it cannot be removed without destroying or defacing the label. The label shall not be affixed to any equipment which is easily detached from such vehicle.

(iii) The label shall contain the following information lettered in the English language in block letters and numerals, which shall be of a color that contrasts with the background of the label:

(A) The label heading: Vehicle Emission Control Information;

(B) Full corporate name and trademark of manufacturer;

(C) Engine displacement (in cubic inches), engine family identification and evaporative family identification;

(D) Engine tune-up specifications and adjustments, as recommended by the manufacturer in accordance with the applicable emission standards (or family emission limits, as appropriate), including but not limited to idle speed(s), ignition timing, the idle air-fuel mixture setting procedure and value (*e.g.*, idle CO, idle air-fuel ratio, idle speed drop), high idle speed, initial injection timing, and valve lash (as applicable), as well as other parameters deemed necessary by the manufacturer. These specifications should indicate the proper transmission position during tune-up and what accessories (*e.g.*, air conditioner), if any, should be in operation;

(E) An unconditional statement of compliance with the appropriate model year U.S. Environmental Protection Agency regulations which apply to light-duty vehicles;

(F) For vehicles which are part of the diesel particulate averaging program, the family particulate emission limit to which the vehicle is certified;

(G) For vehicles that have been exempted from compliance with the emission standards at high altitude, as specified in §86.087–8(h),

(*1*) A highlighted statement (*e.g.*, underscored or boldface letters) that the vehicle is certified to applicable emission standards at low altitude only,

(*2*) A statement that the vehicle's unsatisfactory performance under high-altitude conditions makes it unsuitable for principal use at high altitude, and

(*3*) A statement that the emission performance warranty provisions of 40 CFR part 85, subpart V do not apply when the vehicle is tested at high altitude; and

(H) For vehicles that have been exempted from compliance with the emission standards at low altitude, as specified in §86.087–8(i),

(*1*) A highlighted statement (*e.g.*, underscored or boldface letters) that the vehicle is certified to applicable emission standards at high altitude only, and

(*2*) A statement that the emission performance warranty provisions of 40 CFR part 85, subpart V do not apply when the vehicle is tested at low altitude.

(2) *Light-duty trucks.* (i) A legible permanent label shall be affixed in a readily visible position in the engine compartment.

(ii) The label shall be affixed by the vehicle manufacturer who has been issued the certificate of conformity for such vehicle, in such a manner that it cannot be removed without destroying or defacing the label. The label shall not be affixed to any equipment which is easily detached from such vehicle.

(iii) The label shall contain the following information lettered in the English language in block letters and numerals, which shall be of a color that contrasts with the background of the label.

(A) The label heading: Important Vehicle Information;

(B) Full corporate name and trademark of manufacturer;

(C) Engine displacement (in cubic inches) and engine family identification;

(D) Engine tune-up specifications and adjustments, as recommended by the manufacturer in accordance with the applicable emission standards (or family emission limits, as appropriate), including but not limited to idle speed(s), ignition timing, the idle air-fuel mixture setting procedure and value (*e.g.*, idle CO, idle air-fuel ratio, idle speed drop), high idle speed, initial injection timing, and valve lash (as applicable), as well as other parameters deemed necessary by the manufacturer. These specifications should indicate the proper transmission position during tune-up and what accessories (*e.g.*, air conditioner), if any, should be in operation. If adjustments or modifications to the vehicle are necessary to insure compliance with emission standards (or family emission limits, as appropriate) at either high or low altitude, the manufacturer shall either include the instructions for such adjustments on the label, or indicate on the label where instructions for such adjustments may be found. The label shall indicate whether the engine tune-up or adjustment specifications are applicable to high altitude, low altitude or both;

(E) The prominent statement: ''This vehicle conforms to U.S. EPA regulations applicable to 19__ Model Year New Light-Duty Trucks.''

(F) If the manufacturer is provided an alternate useful-life period under the provisions of § 86.088–21(f), the prominent statement: ''This vehicle has been certified to meet U.S. EPA standards for a useful-life period of __ years or __ miles of operation, whichever occurs first. This vehicle's actual life may vary depending on its service application.'' The manufacturer may alter this statement only to express the assigned alternate useful life in terms other than years of miles (*e.g.*, hours, or miles only);

(G) A statement, if applicable, that the adjustments or modifications indicated on the label are necessary to ensure emission control compliance at the altitude specified;

(H) A statement, if applicable, that the high-altitude vehicle was designated or modified for principal use at high altitude. This statement must be affixed by the manufacturer at the time of assembly or by any dealer who performs the high-altitude modification or adjustment prior to sale to an ultimate purchaser;

(I) For vehicles that have been exempted from compliance with the high-altitude emission standards, as specified in § 86.088–9(g)(2),

(*1*) A highlighted statement (*e.g.*, underscored or boldface letters) that the vehicle is certified to applicable emission standards at low altitude only,

(*2*) A statement that the vehicle's unsatisfactory performance under high-altitude conditions makes it unsuitable for principal use at high altitude, and

(*3*) A statement that the emission performance warranty provisions of 40 CFR part 85, subpart I do not apply when the vehicle is tested at high altitude; and,

(J) For vehicles which are included in the diesel particulate averaging program, the family particulate emission limit to which the vehicle is certified.

(K) For vehicles which are included in the light-duty truck NO_X averaging program, the family NO_X emission limit to which the vehicle is certified.

(3) *Heavy-duty engines.* (i) A permanent legible label shall be affixed to the engine in a position in which it will be readily visible after installation in the vehicle.

(ii) The label shall be attached to an engine part necessary for normal engine operation and not normally requiring replacement during engine life.

(iii) The label shall contain the following information lettered in the English language in block letters and numerals which shall be of a color that contrasts with the background of the label:

(A) The label heading: Important Engine Information;

(B) Full corporate name and trademark of manufacturer;

(C) Engine displacement (in cubic inches) and engine family and model designations;

(D) Date of engine manufacture (month and year). The manufacturer may, in lieu of including the date of manufacture on the engine label, maintain a record of the engine manufacture dates. The manufacturer shall provide the date of manufacture records to the Administrator upon request;

(E) Engine specifications and adjustments as recommended by the manufacturer. These specifications should indicate the proper transmission position during tuneup and what accessories (*e.g.,* air conditioner), if any, should be in operation;

(F) For Otto-cycle engines the label should include the idle speed, ignition timing, and the idle air-fuel mixture setting procedure and value (*e.g.,* idle CO, idle air-fuel ratio, idle speed drop), and valve lash;

(G) For diesel engines the label should include the advertised hp at rpm, fuel rate at advertised hp in mm^3/stroke, valve lash, initial injection timing, and idle speed;

(H) The prominent statement: ''This engine conforms to U.S. EPA regulations applicable to 19__ Model Year New Heavy-Duty Engines.''

(I) If the manufacturer is provided with an alternate useful-life period under the provisions of § 86.088–21(f), the prominent statement: ''This engine has been certified to meet U.S. EPA standards for a useful-life period of __ miles or __ hours of operation, whichever occurs first. This engine's actual life may vary depending on its service application.'' The manufacturer may alter this statement only to express the assigned alternate useful life in terms other than miles or hours (*e.g.,* years, or hours only);

(J) *For diesel engines.* The prominent statement: ''This engine has a primary intended service application as a ____-heavy-duty engine.'' (The primary intended service applications are light, medium, and heavy, as defined in § 86.085–2);

(K) *For Otto-cycle engines.* One of the following statements, as applicable:

(*1*) For engines certified to the emission standards of § 86.091–10(a)(1)(i) or § 86.091–10(a)(1)(iii), the statement: ''This engine is certified for use in all heavy-duty vehicles.''

(*2*) For gasoline-fueled engines certified under the provisions of § 86.091–10(a)(3)(i), the statement: ''This engine is certified for use in all heavy-duty vehicles under the special provision of 40 CFR 86.091–10(a)(3)(i).''

(*3*) For engines certified to the emission standards of § 86.091–10(a)(1)(ii) or § 86.091–10(a)(1)(iv), the statement: ''This engine is certified for use only in heavy-duty vehicles with a gross vehicle weight rating above 14,000 lbs.''

(L) For all heavy-duty engines which are included in the particulate averaging, trading, or banking programs, the particulate family emission limit to which the engine is certified.

(M) For all heavy-duty engines which are included in the NO_X averaging, trading, or banking programs, the NO_X family emission limit to which the engine is certified.

(N) For diesel engines which have been certified to comply with the urban bus particulate standard of 40 CFR 86.091–11(a)(1)(iv), the statement ''This engine is certified for use in an urban bus as defined at 40 CFR 86.091–2.'' Unless waived by the Administrator on the basis of impracticality, for diesel engines not certified to comply with the urban bus particulate standard, the statement ''This engine is not certified for use in an urban bus as defined at 40 CFR 86.091–2. Sales of this engine for use in an urban bus is a violation of Federal law under the Clean Air Act.''

(iv) The label may be made up of one or more pieces: *Provided,* That all pieces are permanently attached to the same engine or vehicle part as applicable.

(4)(i) *Gasoline-fueled and methanol-fueled heavy-duty vehicles.* A permanent, legible label shall be affixed in a readily visible position in the engine compartment. If such vehicles do not have an engine compartment, the label required in paragraphs (a)(4) and (g)(1) of this section shall be affixed in a readily visible position on the operator's enclosure or on the engine.

(ii) The label shall be affixed by the vehicle manufacturer who has been issued the certificate of conformity for such vehicle, in such a manner that it cannot be removed without destroying or defacing the label. The label shall not be affixed to any equipment which is easily detached from such vehicle.

(iii) The lable shall contain the following information lettered in the English language in block letters and numericals, which shall be of a color that contrasts with the background of the label:

(A) The label heading: Vehicle Emission Control Information;

(B) Full corporate name and trademark of manufacturer;

(C) Evaporative family identification;

(D) The maximum nominal fuel tank capacity (in gallons) for which the evaporative control system is certified; and

(E) One of the following, as appropriate:

(*1*) An unconditional statement of compliance with the appropriate model year U.S. Environmental Protection Agency regulations which apply to gasoline-fueled heavy-duty vehicles.

(*2*) An unconditional statement of compliance with the appropriate model year U.S. Environmental Protection Agency regulations which apply to methanol-fueled heavy-duty vehicles.

(b) The provisions of this section shall not prevent a manufacturer from also reciting on the label that such vehicle (or engine) conforms to any applicable state emission standards for new motor vehicles (or new motor vehicle engines) or any other information that such manufacturer deems necessary for, or useful to, the proper operation and satisfactory maintenance of the vehicle (or engine).

(c)(1) The manufacturer of any light-duty vehicle or light-duty truck subject to the emission standards (or family emission limits, as appropriate) of this subpart shall, in addition and subsequent to setting forth those statements on the label required by the Department of Transportation (DOT) pursuant to 49 CFR 567.4, set forth on the DOT label or on an additional label located in proximity to the DOT label and affixed as described in 40 CFR 567.4(b), the following information in the English language, lettered in block letters and numerals not less than three thirty-seconds of an inch high, of a color that contrasts with the background of the label:

(i) The Heading: ''Vehicle Emission Control Information.''

(ii)(A) *For light-duty vehicles,* the statement: ''This Vehicle Conforms to U.S. EPA Regulations Applicable to 19—Model Year New Motor Vehicles.''

(B) *For light-duty trucks.* (*1*) The statement: ''This vehicle conforms to U.S. EPA regulations applicable to 19—Model Year New Light-Duty Trucks.''

(*2*) If the manufacturer is provided an alternate useful-life period under the provisions of § 86.088–21(f), the prominent statement: ''This vehicle has been certified to meet U.S. EPA standards for a useful-life period of __ years or __ miles of operation, whichever occurs first. This vehicle's actual life may vary depending on its service application.'' The manufacturer may alter this statement only to express the assigned alternative useful life in terms other than years or miles (*e.g.,* hours, or miles only).

(iii) One of the following statements, as applicable, in letters and numerals not less than six thirty-seconds of an inch high and of a color that contrasts with the background of the label:

(A) For all vehicles certified as non-catalyst-equipped: ''NON-CATALYST'';

(B) For all vehicles certified as catalyst-equipped which are included in a manufacturer's catalyst control program for which approval has been given by the Administrator: ''CATALYST—APPROVED FOR IMPORT'';

(C) For all vehicles certified as catalyst-equipped which are not included in a manufacturer's catalyst control program for which prior approval has been given by the Administrator: ''CATALYST'';

(2) In lieu in of selecting either of the labeling options of paragraph (c)(1) of this section, the manufacturer may add the information required by paragraph (c)(1)(iii) of this section to the labeling required by paragraph (a) of this section. The required information will be set forth in the manner prescribed by paragraph (c)(1)(iii) of this section.

(d) Incomplete light-duty trucks or incomplete heavy-duty vehicles optionally certified as light-duty trucks shall have the following prominent statement printed on the label required by paragraph (a)(2) of this section in lieu of the statement required by paragraph (a)(2)(iii)(E) of this section: ''This vehicle conforms to U.S. EPA regulations applicable to 19__ Model Year New Light-Duty Trucks when completed at a maximum curb weight of __ pounds or at a maximum gross vehicle weight rating of __ pounds or with a maximum frontal area of __ square feet.''

(e) Incomplete heavy-duty vehicles having a gross vehicle weight rating of 8,500 pounds or less shall have one of the following statements printed on the label required by paragraph (a)(3) of this section in lieu of the statement required by paragraph (a)(3)(iii)(H) of this section: ''This engine conforms to U.S. EPA regulations applicable to 19__ Model Year New Heavy-Duty Engines when installed in a vehicle completed at a curb weight of more than 6,000 pounds or with a frontal area of greater than 45 square feet.''

(f) The manufacturer of any incomplete light-duty vehicle or light-duty truck shall notify the purchaser of such vehicle of any curb weight, frontal area, or gross vehicle weight rating limitations affecting the emission certificate applicable to that vehicle. This notification shall be transmitted in a manner consistent with National Highway Traffic Safety Administration safety notification requirements published in 49 CFR part 568.

(g)(1)(i) Incomplete gasoline-fueled heavy-duty vehicles shall have the following prominent statement printed on the label required in paragraph (a)(4) of this section: ''(Manufacturer's corporate name) has determined that this vehicle conforms to U.S. EPA regulations applicable to 19__ Model Year New Gasoline-Fueled Heavy-Duty Vehicles when completed with a nominal fuel tank capacity not to exceed ____ gallons. Persons wishing to add fuel tank capacity beyond the above maximum must submit a written statement to the Administrator that the hydrocarbon storage system has been upgraded according to the requirements of 40 CFR 86.091–35(g)(2).''

(ii) Incomplete methanol-fueled heavy-duty vehicles shall have the following prominent statement printed on the label required in paragraph (a)(4) of this section: ''(Manufacturer's corporate name) has determined that this vehicle conforms to U.S. EPA regulations applicable to 19__ Model Year New Methanol-Fueled Heavy-Duty Vehicles when completed with a nominal fuel tank capacity not to exceed ____ gallons. Persons wishing to add fuel tank capacity beyond the above maximum must submit a written statement to the Administrator that the hydrocarbon storage system has been upgraded according to the requirements of 40 CFR 86.091–35(g)(2).''

(2) Persons wishing to add fuel tank capacity beyond the maximum specified on the label required in paragraph (g)(1) of this section shall:

(i) Increase the amount of fuel tank vapor storage material according to the following function:

$$\mathrm{Cap_f} = \mathrm{Cap_i}\left(\frac{\text{T. Vol.}}{\text{Max. Vol.}}\right)$$

Where:

$\mathrm{Cap_f}$ = final amount of fuel tank vapor storage material, grams.

$\mathrm{Cap_i}$ = initial amount of fuel tank vapor storage material, grams.

T. Vol. = total fuel tank volume of completed vehicle, gallons.

Max. Vol. = maximum fuel tank volume as specified on the label required in paragraph (g)(1) of this section, gallons.

(ii) Use, if applicable, hosing for fuel vapor routing which is at least as impermeable to hydrocarbon vapors as that used by the primary manufacturer.

(iii) Use vapor storage material with the same adsorptive characteristics as that used by the primary manufacturer.

(iv) Connect, if applicable, any new hydrocarbon storage device to the existing hydrocarbon storage device in series such that the original hydrocarbon storage device is situated between the fuel tank and the new hydrocarbon storage device. The original hydrocarbon storage device shall be sealed such that vapors cannot reach the atmosphere. The elevation of the original hydrocarbon storage device

shall be equal to or lower than the new hydrocarbon storage device.

(v) Submit a written statement to the Administrator that paragraphs (g)(2)(i) through (g)(2)(iv) of this section have been complied with.

(3) If applicable, the Administrator will send a return letter verifying the receipt of the written statement required in paragraph (g)(2)(v) of this section.

(h)(1) Light-duty trucks and heavy-duty engines for which nonconformance penalties are to be paid in accordance with § 86.1113–87(b) shall have the following information printed on the label required in paragraph (a) of this section or on a separate permanent legible label in the English language and located in proximity to the label required in paragraph (a) of this section. The manufacturer shall begin labeling production engines or vehicles within 10 days after the completion of the PCA.

(i) The statement: ''The manufacturer of this engine/vehicle will pay a penalty to be allowed to introduce it into commerce at an emission level higher than the applicable emission standard. The compliance level (or new emission standard) for this engine/vehicle is _____.'' (The manufacturer shall insert the applicable pollutant and compliance level calculated in accordance with § 86.1112–87(a).)

(ii) [Reserved]

(2) If a manufacturer introduces an engine or vehicle into commerce prior to the compliance level determination of § 86.1112–87(a), it shall provide the engine or vehicle owner with a label as described above to be affixed in a location in proximity to the label required in paragraph (a) of this section within 30 days of the completion of the PCA.

(Secs. 202, 203, 206, 207, 208, 301a, Clean Air Act, as amended; 42 U.S.C. 7521, 7522, 7525, 7541, 7542, 7601a)

[50 FR 10690, Mar. 15, 1985, as amended at 54 FR 14498, Apr. 11, 1989; 55 FR 30626, July 26, 1990; 55 FR 46628, Nov. 5, 1990]

§ 86.092–1 General applicability.

(a) The provisions of this subpart apply to 1992 and later model year new Otto-cycle and diesel light-duty vehicles, 1992 and later model year new Otto-cycle and diesel light-duty trucks, and 1992 and later model year new Otto-cycle and diesel heavy-duty engines. The provisions of this subpart are optional for vehicles fueled with either natural gas or liquefied petroleum gas for the 1994 through 1996 model years. The provisions of this subpart also apply to aftermarket conversions of all model year Otto-cycle and diesel light-duty vehicles, Otto-cycle and diesel light-duty trucks, and Otto-cycle and diesel heavy-duty engines certified under the provisions of 40 CFR part 85, subpart F.

(b) *Optional applicability.* A manufacturer may request to certify any heavy-duty vehicle of 10,000 pounds Gross Vehicle Weight Rating or less in accordance with the light-duty truck provisions. Heavy-duty engine or vehicle provisions do not apply to such a vehicle.

(c) [Reserved]

(d) *Alternative Durability Program.* For 1992 and later model year light-duty vehicles and light-duty trucks, a manufacturer may elect to participate in the Alternative Durability Program. This optional program provides an alternative method of determining exhaust emission control system durability.

The general procedures and a description of the programs are contained in § 86.085–13 and specific provisions on test vehicles and compliance procedures are contained in § 86.092–24 and § 86.091–28 respectively.

(e) *Small volume manufacturers.* Special certification procedures are available for any manufacturer whose projected combined U.S. sales of light-duty vehicles, light-duty trucks, heavy-duty vehicles, and heavy-duty engines in its product line (including all vehicles and engines imported under the provisions of 40 CFR 85.1505 and 40 CFR 85.1509) are fewer than 10,000 units for the model year in which the manufacturer seeks certification. To certify its product line under these optional procedures, the small-volume manufacturer must first obtain the Administrator's approval. The manufacturer must meet the eligibility criteria specified in § 86.092–14(b) before the Administrator's approval will be granted.

The small-volume manufacturer's certification procedures are described in §86.092–14.

(f) *Optional procedures for determining exhaust opacity*. (1) The provisions of subpart I apply to tests which are performed by the Administrator, and optionally, by the manufacturer.

(2) Measurement procedures, other than that described in subpart I, may be used by the manufacturer provided the manufacturer satisfies the requirements of §86.091–23(f).

(3) When a manufacturer chooses to use an alternative measurement procedure it has the responsibility to determine whether the results obtained by the procedure will correlate with the results which would be obtained from the measurement procedure in subpart I. Consequently, the Administrator will not routinely approve or disapprove any alternative opacity measurement procedure or any associated correlation data which the manufacturer elects to use to satisfy the data requirements for subpart I.

(4) If a confirmatory test(s) is performed and the results indicate there is a systematic problem suggesting that the data generated under an optional alternative measurement procedure do not adequately correlate with subpart I data, EPA may require that all certificates of conformity not already issued be based on data from subpart I procedures.

[55 FR 7187, Feb. 28, 1990, as amended at 59 FR 48494, Sept. 21, 1994]

§86.092–2 Definitions.

The definitions of §86.091–2 remain effective. The definitions listed in this section apply beginning with the 1992 model year.

(a) *Proven emission control systems* are emission control components or systems (and fuel metering systems) that have completed full durability testing evaluation over a vehicle's useful life in some other certified engine family, or have completed bench or road testing demonstrated to be equal or more severe than certification mileage accumulation requirements. Alternatively, proven components or systems are those that are determined by EPA to be of comparable functional quality and manufactured using comparable materials and production techniques as components or systems which have been durability demonstrated in some other certified engine family. In addition, the components or systems must be employed in an operating environment (e.g., temperature, exhaust flow, etc.,) similar to that experienced by the original or comparable components or systems in the original certified engine family.

(b) *Unproven emission control systems* are emission control components or systems (and fuel metering systems) that do not qualify as proven emission control systems.

(c) *Similar systems* are engine, fuel metering and emission control system combinations which use the same fuel (e.g., gasoline, diesel, etc.), combustion cycle (i.e., two or four stroke), general type of fuel system (i.e., carburetor or fuel injection), catalyst system (e.g., none, oxidization, three-way plus oxidization, three-way only, etc.), fuel control system (i.e., feedback or non-feedback), secondary air system (i.e., equipped or not equipped) and EGR (i.e., equipped or not equipped).

(d) *Conveniently available* service facility and spare parts for small-volume manufacturers means that the vehicle manufacturer has a qualified service facility at or near the authorized point of sale or delivery of its vehicles and maintains an inventory of all emission-related spare parts or has made arrangements for the part manufacturers to supply the parts by expedited shipment (e.g., utilizing overnight express delivery service, UPS, etc.).

[55 FR 7187, Feb. 28, 1990]

§86.092–14 Small-volume manufacturers certification procedures.

(a) The small-volume manufacturers certification procedures described in paragraphs (b) and (c) of this section are optional. Small-volume manufacturers may use these optional procedures to demonstrate compliance with the general standards and specific emission requirements contained in this subpart.

(b)(1) The optional small-volume manufacturers certification procedures apply to light-duty vehicles, light-duty trucks, heavy-duty vehicles, and

heavy-duty engines produced by manufacturers with U.S. sales, including all vehicles and engines imported under the provisions of 40 CFR 85.1505 and 40 CFR 85.1509 (for the model year in which certification is sought) of fewer than 10,000 units (Light-Duty Vehicles, Light-Duty Trucks, Heavy-Duty Vehicles and Heavy-Duty Engines combined).

(2) For the purpose of determining the applicability of paragraph (b)(1) of this section, the sales the Administrator shall use shall be the aggregate of the projected or actual sales of those vehicles and/or engines in any of the groupings identified below in this subparagraph.

(i) Vehicles and/or engines produced by two or more firms, one of which is 10 percent or greater part owned by another;

(ii) Vehicles and/or engines produced by any two or more firms if a third party has equity ownership of 10 percent or more in each of the firms;

(iii) Vehicles and/or engines produced by two or more firms having a common corporate officer(s) who is(are) responsible for the overall direction of the companies;

(iv) Vehicles and/or engines imported or distributed by all firms where the vehicles and/or engines are manufactured by the same entity and the importer or distributer is an authorized agent of the entity.

(3) If the aggregated sales, as determined in paragraph (b)(2) of this section are less than 301 units, the manufacturers in the aggregated relationship may certify under the provisions in this section that apply to manufacturers with sales of less than 301 units.

(4) If the aggregated sales, as determined in paragraph (b)(2) of this section are greater than 300 but fewer than 10,000 units, the manufacturers in the aggregated relationship may certify under the provisions in this section that apply to manufacturers with sales from and including 301 through 9,999 motor vehicles and motor vehicles engines per year.

(5) If the aggregated sales, as determined in paragraph (b)(2) of this section are equal to or greater than 10,000 units, then the manufacturers involved in the aggregated relationship will be allowed to certify a number of units under the small-volume engine family certification procedures (40 CFR 86.092–24(e)) in accordance with the criteria identified below in this subparagraph.

(i) If a manufacturer purchases less than 50 percent of another manufacturer, each manufacturer retains its right to certify 9,999 units using the small-volume engine family certification procedures.

(ii) If a manufacturer purchases 50 percent or more of another manufacturer, the manufacturer with the over 50 percent interest must share, with the manufacturer it purchased, its 9,999 units under the small-volume engine family certification procedures.

(iii) In a joint venture arrangement (50/50 ownership) between two manufacturers, each manufacturer retains its eligibility for 9,999 units under the small-volume engine family certification procedures, but the joint venture must draw its maximum 9,999 units from the units allocated to its parent manufacturers.

(c) Small-volume manufacturers shall demonstrate compliance with the applicable sections of this subpart. The appropriate model year of the following applicable sections shall be determined in accordance with § 86.084–4:

(1) Sections 86.092–1, 86.092–2, 86.090–3, 86.084–4, 86.090–5, 86.078–6, 86.078–7, and 86.090–8 through 86.090–11 of this subpart are applicable.

(2) Section 86.080–12 of this subpart is not applicable.

(3) Section 86.085–13, 86.092–14, 86.084–15, and 86.085–20 of this subpart are applicable.

(4) Small-volume manufacturers shall include in their records all of the information that EPA requires in §86.090–21 of this subpart. This information will be considered part of the manufacturer's application for certification. However, the manufacturer is not required to submit the information to the Administrator unless the Administrator requests it.

(5) Section 86.085–22 of this subpart is applicable except as noted below.

(i) Small-volume light-duty vehicle and light-duty truck manufacturers may satisfy the requirements of paragraph (e) of § 86.085–22 by including a statement of compliance on adjustable

parameters in the application for certification. In the statement of compliance the manufacturer shall state that the limits, stops, seals, or other means used to inhibit adjustment have been designed to accomplish their intended purpose based on good engineering practice and past experience. If the vehicle parameter is adjustable the vehicle must meet emission standards with the parameter set any place within the adjustable range (Reference § 86.090–21 of this subpart).

(6) Section 86.090–23 of this subpart is applicable.

(7) Section 86.092–24 of this subpart is applicable except as noted below.

(i) Small-volume manufacturers may satisfy the requirements of paragraph (b) and (c) of § 86.092–24 of this subpart by:

(A) *Emission-data*—Selecting one emission-data test vehicle (engine) per engine family by the worst-case emissions criteria as follows:

(*1*) *Light-duty vehicles and light-duty trucks.* The manufacturer shall select the vehicle with the heaviest equivalent test weight (including options) within the engine family. Then within that vehicle the manufacturer shall select, in the order listed, the highest road load power, largest displacement, the transmission with the highest numerical final gear ratio (including overdrive), the highest numerical axle ratio offered in the engine family, and the maximum fuel flow calibration.

(*2*) *Heavy-duty Otto-cycle engines.* The manufacturer shall select one emission-data engine first based on the largest displacement within the engine family. Then within the largest displacement the manufacturer shall select, in the order listed, highest fuel flow at the speed of maximum rated torque, the engine with the most advanced spark timing, no EGR or lowest EGR flow, and no air pump or lowest actual flow air pump.

(*3*) *Heavy-duty diesel engines.* The manufacturer shall select one emission-data engine based on the highest fuel feed per stroke, primarily at the speed of maximum rated torque and secondarily at rated speed.

(B) Testing light-duty vehicles or light-duty truck emission-data vehicles at any service accumulation distance of at least 2,000 miles (3,219 kilometers) or, catalyst equipped heavy-duty emission-data engines at any service accumulation time of at least 62 hours, or non-catalyst equipped heavy-duty engine emission-data engines at any service accumulation time determined by the manufacturer to result in stabilized emissions. The emission performance of the emission-data vehicle or engine must be stabilized prior to emission testing.

(C) *Durability data*—Satisfying the durability-data requirements by complying with the applicable procedures below:

(*1*) Manufacturers with aggregated sales of less than 301 motor vehicles and motor vehicle engines per year may use assigned deterioration factors that the Administrator determines and prescribes. The factors will be the Administrator's estimate, periodically updated and published in an advisory letter or advisory circular, of the 70th percentile deterioration factors calculated using the industrywide data base of previously completed durability-data vehicles or engines used for certification. However, the manufacturer may, at its option, accumulate miles (hours) on a durability-data vehicle (engine) and complete emission tests for the purpose of establishing its own deterioration factors.

(*2*) Manufacturers with aggregated sales from and including 301 through 9,999 motor vehicles and motor vehicle engines per year certifying light-duty vehicle exhaust emissions from vehicles equipped with proven emission control systems shall use assigned deterioration factors that the manufacturer determines based on its good engineering judgment. However, the manufacturer may not use deterioration factors less than either the average or 70th percentile of all of that manufacturer's deterioration factor data, whichever is less. These minimum deterioration factors shall be calculated according to procedures in paragraph (c)(7)(i)(C)(*2*)(*i*), of this section. If the manufacturer does not have at least two data points to calculate these manufacturer specific average deterioration factors, then the deterioration factors shall be no less than the EPA supplied industrywide deterioration

factors. However, the manufacturer may, at its option, accumulate miles on a durability-data vehicle and complete emission tests for the purpose of establishing its own deterioration factors.

(*i*) The manufacturer's minimum deterioration factors shall be calculated using the deterioration factors from all engine families, within the same vehicle/engine-fuel usage category (e.g., gasoline-fueled light-duty vehicle, etc.) previously certified to the same emission standards. The manufacturer shall use only deterioration factors engine families previously certified by the manufacturer and the deterioration factors shall not be included in the calculation more than once. The deterioration factors for each pollutant shall be calculated separately. The manufacturer may, at its option, limit the deterioration factors used in the calculation of the manufacturer's minimum deterioration factors to those from all similar systems to the system being certified if sufficient data (i.e., from at least two certified systems) exists. All data eligible to be grouped as similar system data shall be used in calculating similar system deterioration factors. Any deterioration factors used in calculating similar system deterioration factors shall not be included in calculating the manufacturer's minimum deterioration factors used to certify any of the manufacturer's remaining vehicle systems.

(*3*) Manufacturers with aggregated sales from 301 through 9,999 motor vehicles and motor vehicle engines and certifying light-duty vehicle exhaust emissions from vehicles equipped with unproven emission control systems shall use deterioration factors that the manufacturer determines from official certification durability data generated by vehicles from engine families representing a minimum of 25 percent of the manufacturer's sales equipped with unproven emission control systems. The sales projections are to be based on total sales projected for each engine/system combination. The durability-data vehicle (engine) mileage accumulation and emission tests are to be conducted according § 86.092–26 of this subpart. The manufacturer must develop deterioration factors by generating durability data in accordance with § 86.092–26 of this subpart on a minimum of 25 percent of the manufacturer's projected sales (by engine/system combination) that is equipped with unproven emission control systems. The manufacturer must complete the 25 percent durability requirement before the remainder of the manufacturer's sales equipped with unproven emission control systems is certified using manufacturer-determined assigned deterioration factors. Alternatively, any of these manufacturers may, at their option, accumulate miles on durability-data vehicles and complete emission tests for the purpose of establishing their own deterioration factors on the remaining sales.

(*4*) For light-duty vehicle, light-duty truck, and heavy-duty vehicle evaporative emissions and light-duty truck, and heavy-duty engine exhaust emissions, deterioration factors shall be determined in accordance with § 86.092–24 of this subpart.

(ii) Paragraphs (d) and (e) of § 86.092–24 of this subpart are not applicable.

(8) Section 86.090–25 of this subpart is applicable to maintenance performed on durability-data light-duty vehicles, light-duty trucks, heavy-duty vehicles, and heavy-duty engines when the manufacturer completes durability-data vehicles or engines; section 86.087–38 of this subpart is applicable to the recommended maintenance the manufacturer includes in the maintenance instructions furnished the purchasers of new motor vehicles and new motor vehicle engines under § 86.087–38 of this subpart.

(9)(i) Section 86.092–26 of this subpart is applicable if the manufacturer completes durability-data vehicles or engines.

(ii) Section 86.085–27 of this subpart is applicable.

(10) Sections 86.090–28 and 86.090–29 of this subpart are applicable.

(11)(i) Section 86.090–30 of this subpart is applicable, except for paragraph (a)(2) and (b) of that section. In the place of these paragraphs, small-volume manufacturer shall comply with paragraphs (c)(11)(ii) through (v) of this section, as shown below.

(ii) Small-volume manufacturers shall submit an application for certification containing the following:

(A) The names, addresses, and telephone numbers of the persons the manufacturer authorizes to communicate with us.

(B) A brief description of the vehicles (or engines) covered by the certificate (the manufacturers' sales data book or advertising, including specifications, may satisfy this requirement for most manufacturers). The description shall include, as a minimum, the following items as applicable:

(*1*) Engine evaporative family names and vehicle (or engine) configurations.

(*2*) Vehicle carlines or engine models to be listed on the certificate of conformity.

(*3*) The test weight and horsepower setting for each vehicle or engine configuration.

(*4*) Projected sales.

(*5*) Combustion cycle.

(*6*) Cooling mechanism.

(*7*) Number of cylinders.

(*8*) Displacement.

(*9*) Fuel system type.

(*10*) Number of catalytic converters, type, volume, composition, surface area, and total precious metal loading.

(*11*) Method of air aspiration.

(*12*) Thermal reactor characteristics.

(*13*) Suppliers' and/or manufacturers' name and model number of any emission related items of the above, if purchased from a supplier who uses the items in its own certified vehicles(s) or engine(s).

(*14*) A list of emission component part numbers.

(*15*) Drawings, calibration curves, and descriptions of emission related components, including those components regulated under paragraph (e) of § 86.085–22 of this subpart, and schematics of hoses and other devices connecting these components.

(*16*) Vehicle adjustments or modifications necessary for light-duty trucks to assure that they conform to high-altitude standards.

(*17*) A description of the light-duty vehicles and light-duty trucks which are exempted from the high-altitude emission standards.

(*18*) Proof that the manufacturer has obtained or entered an agreement to purchase, when applicable, the insurance policy, required by § 85.1510(b). The manufacturer may submit a copy of the insurance policy or purchase agreement as proof that the manufacturer has obtained or entered an agreement to purchase the insurance policy.

(C) The results of all emission tests the manufacturer performs to demonstrate compliance with the applicable standards.

(D)(*1*) The following statement signed by the authorized representative of the manufacturer: ''The vehicles (or engines) described herein have been tested in accordance with (list of the applicable subparts A, B, D, I, M, N, or P) of part 86, title 40, United States Code of Federal Regulations, and on the basis of those tests are in conformance with that subpart. All of the data and records required by that subpart are on file and are available for inspection by the EPA Administrator. We project the total U.S. sales of vehicles (engines) subject to this subpart (including all vehicles and engines imported under the provisions of 40 CFR 85.1505 and 40 CFR 85.1509 to be fewer than 10,000 units.''

(*2*) A statement as required by and contained in paragraph (c)(5) of this section signed by the authorized representative of the manufacturer.

(*3*) A statement that the vehicles or engines described in the manufacturer's application for certification are not equipped with auxiliary emission control devices which can be classified as a defeat device as defined in § 86.092–2 of this subpart.

(*4*) A statement of compliance with section 206(a)(3) of the Clean Air Act.

(*5*) A statement that, based on the manufacturer's engineering evaluation and/or emission testing, the light-duty vehicles comply with emission standards at high altitude unless exempt under paragraph (h) of § 86.090–8 of this subpart.

(*6*) A statement that, based on the manufacturer's engineering evaluation and/or emission testing, the light-duty trucks sold for principle use at designated high-altitude locations comply with the high-altitude emission requirements and that all other light-duty trucks are at least capable of being modified to meet high-altitude

standards unless exempt under paragraph (g)(2) of § 86.090–9 of this subpart.

(*7*) A statement affirming that the manufacturer will provide a list of emission and emission-related service parts, including part number designations and sources of parts, to the vehicle purchaser for all emission and emission-related parts which might affect vehicle emission performance throughout the useful life of the vehicle. Secondly, it must state that qualified service facilities and emission-related repair parts will be conveniently available to serve its vehicles. In addition, if service facilities are not available at the point of sale or distribution, the manufacturer must indicate that the vehicle purchaser will be provided information identifying the closest authorized service facility to the point of sale, if in the United States, or the closest authorized service facility to the point of distribution to the ultimate purchaser if the vehicle was purchased outside of the United States by the ultimate purchaser. Such information should also be made available to the Administrator upon request.

(E) Manufacturers utilizing deterioration factors determined by the manufacturer based on its good engineering judgment (re: paragraph (c)(7)(i)(C)(*2*) of this section) shall provide a description of the method(s) used by the manufacturer to determine the deterioration factors.

(iii) If the manufacturer meets requirements of this subpart, the Administrator will issue a certificate of conformity for the vehicles or engines described in the application for certification.

(iv) The certificate will be issued for such a period not to exceed one model year as the Administrator may determine and upon such terms as he may deem necessary to assure that any vehicle or engine covered by the certificate will meet the requirements of the Act and of this subpart.

(v)(A) If, after a review of the statements and descriptions submitted by the manufacturer, the Administrator determines that the manufacturer has not met the applicable requirements, the Administrator shall notify the manufacturer in writing of his intention to deny certification, setting forth the basis for his determination. The manufacturer may request a hearing on the Administrator's determination.

(B) If the manufacturer does not request a hearing or present the required information the Administrator will deny certification.

(12) Sections 86.079–31 and 86.079–32 of this subpart are not applicable.

(13) Under § 86.079–33 of this subpart, small-volume manufacturers are covered by the following.

(i) Small-volume manufacturers may make production changes (running changes) without receiving the Administrator's prior approval. The manufacturer shall assure (by conducting emission tests as it deems necessary) that the affected vehicles (engines) remain in compliance with the requirements of this part.

(ii) The manufacturer shall notify the Administrator within seven days after implementing any production related change (running change) that would affect vehicle emissions. This notification shall include any changes to the information required under paragraph (c)(11)(ii) of this section. The manufacturer shall also amend as necessary its records required under paragraph (c)(4) of this section to confirm with the production design change.

(14) Section 86.082–34 of this subpart is not applicable.

(15) Sections 86.092–35, 86.079–36, 86.082–37, 86.087–38 and 86.084–39 of this subpart are applicable.

[55 FR 7187, Feb. 28, 1990]

§ 86.092–15 NO_X and particulate averaging, trading, and banking for heavy-duty engines.

(a)(1) Heavy-duty engines eligible for the NO_X and particulate averaging, trading, and banking programs are described in the applicable emission standards sections in this subpart. Participation in these programs is voluntary.

(2)(i) Engine families with FELs exceeding the applicable standard shall obtain emission credits in a mass amount sufficient to address the shortfall. Credits may be obtained from averaging, trading, or banking, within the averaging set restrictions described in this section.

(ii) Engine families with FELs below the applicable standard will have emission credits available to average, trade, bank or a combination thereof. Credits may not be used to offset emissions that exceed an FEL. Credits may not be used to remedy an in-use nonconformity determined by a Selective Enforcement Audit or by recall testing. However, credits may be used to allow subsequent production of engines for the family in question if the manufacturer elects to recertify to a higher FEL.

(iii) Credits scheduled to expire in the earliest model year shall be used, prior to using other available credits, to offset emissions of engine families with FELS exceeding the applicable standard.

(b) Participation in the NO_X and/or particulate averaging, trading, and banking programs shall be done as follows. (1) During certification, the manufacturer shall:

(i) Declare its intent to include specific engine families in the averaging, trading and/or banking programs. Separate declarations are required for each program and for each pollutant (i.e., NO_X and particulate).

(ii) Declare an FEL for each engine family participating in one or more of these three programs.

(A) The FEL must be to the same level of significant digits as the emission standard (one-tenth of a gram per brake horsepower for NO_X emissions and one-hundredth of a gram per brake horsepower-hour for particulate emissions).

(B) In no case may the FEL exceed the upper limit prescribed in the section concerning the applicable heavy-duty engine NO_X and particulate emission standards.

(iii) Calculate the projected emission credits (+/) based on quarterly production projections for each participating family and for each pollutant (NO_X and particulate), using the equation in paragraph (c) of this section and the applicable factors for the specific engine family.

(iv)(A) Determine and state the source of the needed credits according to quarterly projected production for engine families requiring credits for certification.

(B) State where the quarterly projected credits will be applied for engine families generating credits.

(C) Credits may be obtained from or applied to only engine families within the same averaging set as described in paragraphs (d) and (e) of this section. Credits available for averaging, trading, or banking as defined in § 86.090–2, may be applied to a given engine famil(y) (ies), or reserved as defined in § 86.091–2.

(2) Based on this information each manufacturer's certification application must demonstrate:

(i) That at the end of model year production, each engine family has a net emissions credit balance of zero or more using the methodology in paragraph (c) of this section with any credits obtained from averaging, trading or banking.

(ii) The source of the credits to be used to comply with the emission standard if the FEL exceeds the standard, or where credits will be applied if the FEL is less than the emission standard. In cases where credits are being obtained, each engine family involved must state specifically the source (manufacturer/engine family) of the credits being used. In cases where credits are being generated/supplied, each engine family involved must state specifically the designated use (manufacturer/engine family or reserved) of the credits involved. All such reports shall include all credits involved in averaging, trading or banking.

(3) During the model year manufacturers must:

(i) Monitor projected versus actual production to be certain that compliance with the emission standards is achieved at the end of the model year.

(ii) Provide the end of-model year reports required under § 86.091–23.

(iii) Maintain the quarterly records required under § 86.091–7(c)(8).

(4) Projected credits based on information supplied in the certification application may be used to obtain a certificate of conformity. However, any such credits may be revoked based on review of end-of-model year reports, follow-up audits, and any other verification steps deemed appropriate by the Administrator.

(5) Compliance under averaging, banking, and trading will be determined at the end of the model year. Engine families without an adequate amount of actual NO_X and/or particulate emission credits will violate the conditions of the certificate of conformity. The certificates of conformity may be voided ab initio for those engine families.

(6) If EPA or the manufacturer determines that a reporting error occurred on an end-of-year report previously submitted to EPA under this section, the manufacturer's credits and credit calculations will be recalculated. Erroneous positive credits will be void. Erroneous negative credit balances may be adjusted by EPA.

(i) If EPA review of a manufacturer's end-of-year report indicates an inadvertent credit shortfall, the manufacturer will be permitted to purchase the necessary credits to bring the credit balance for that engine family to zero, at the ratio of 1.2 credits purchased for every credit needed to bring the balance to zero. If sufficient credits are not available to bring the credit balance for the engine family in question to zero, EPA may void the certificate for that engine family ab initio.

(ii) If within 180 days of receipt of the manufacturer's end-of-year report, EPA review determines a reporting error in the manufacturer's favor (i.e., resulting in a positive credit balance) or if the manufacturer discovers such an error within 180 days of EPA receipt of the end-of-year report, the credits will be restored for use by the manufacturer. For the 1992 model year, corrections to the end-of-year reports may be submitted until May 9, 1994.

(c)(1) For each participating engine family, NO_X and particulate emission credits (positive or negative) are to be calculated according to one of the following equations and rounded, in accordance with ASTM E29–67, to the nearest one-tenth of a Megagram (Mg). Consistent units are to be used throughout the equation.

For determining credit need for all engine families and credit availability for engine families generating credits for averaging programs only:

$$\text{Emission credits} = (\text{StdFEL}) \times (\text{CF}) \times (\text{UL}) \times (\text{Production}) \times (106)$$

For determining credit availability for engine families generating credits for trading or banking programs:

$$\text{Emission credits} = (\text{StdFEL}) \times (\text{CF}) \times (\text{UL}) \times (\text{Production}) \times (106) \times (0.8)$$

Where:

Std=the current and applicable heavy-duty engine NO_X or particulate emission standard in grams per brake horsepower hour or grams per Megajoule.

FEL=the NO_X or particulate family emission limit for the engine family in grams per brake horsepower-hour or grams per Megajoule.

CF=a transient cycle conversion factor in BHP-hr/mi or MJ/mi, as given in paragraph (c)(2) of this section.

UL=the useful life, or alternative life as described in paragraph (f) of § 86.090–21, for the given engine family in miles.

Production=the number of engines produced for U.S. sales within the given engine family during the model year. Quarterly production projections are used for initial certification. Actual production is used for end-of-year compliance determination.

0.8=a one-time discount applied to all credits to be banked or traded within the model year generated. Banked credits traded in a subsequent model year will not be subject to an additional discount. Banked credits used in a subsequent model year's averaging program will not have the discount restored.

(2) The transient cycle conversion factor is the total (integrated) cycle brake horsepower-hour or Megajoules, divided by the equivalent mileage of the applicable transient cycle. For Otto-cycle heavy-duty engines, the equivalent mileage is 6.3 miles. For diesel heavy-duty engines, the equivalent mileage is 6.5 miles. When more than one configuration is chosen by EPA to be tested in the certification of an engine family (as described in § 86.085–24), the conversion factor used is to be based upon the configuration generating the highest conversion factor when determining credit need and the lowest conversion factor when determining credit availability for banking, trading or averaging.

(d) Averaging sets for NO_X emission credits: The averaging and trading of NO_X emission credits will only be allowed between heavy-duty engine families in the same averaging set and in the same regional category. Engines

produced for sale in California constitute a separate regional category than engines produced for sale in the other 49 states. Banking and trading are not applicable to engines sold in California. The averaging sets for the averaging and trading of NO_X emission credits for heavy-duty engines are defined as follows:

(1) For Otto-cycle heavy-duty engines:

(i) Otto-cycle heavy-duty engines constitute an averaging set. Averaging and trading among all Otto-cycle heavy-duty engine families is allowed. There are no subclass restrictions.

(ii) Gasoline-fueled heavy-duty vehicles certified under the provisions of § 86.085–1(b) may not average or trade credits with gasoline-fueled heavy-duty Otto-cycle engines, but may average or trade credits with light-duty trucks.

(2) For diesel cycle heavy-duty engines:

(i) Each of the three primary intended service classes for heavy-duty diesel engines, as defined in § 86.090–2, constitute an averaging set. Averaging and trading among all diesel cycle engine families within the same primary service class is allowed.

(ii) Urban buses are treated as members of the primary intended service class where they would otherwise fall.

(e) Averaging sets for particulate emission credits. The averaging and trading of particulate emission credits will only be allowed between diesel cycle heavy-duty engine families in the same averaging set and in the same regional category. Engines produced for sale in California constitute a separate regional category than engines produced for sale in the other 49 states. Banking and trading are not applicable to engines sold in California. The averaging sets for the averaging and trading of particulate emission credits for diesel cycle heavy-duty engines are defined as follows:

(1) Engines intended for use in urban buses constitute a separate averaging set from all other heavy-duty engines. Averaging and trading among all diesel cycle bus engine families is allowed.

(2) For heavy-duty engines, exclusive of urban bus engines, each of the three primary intended service classes for heavy-duty diesel cycle engines, as defined in § 86.090–2, constitute an averaging set. Averaging and trading between diesel cycle engine families within the same primary service class is allowed.

(3) Otto-cycle engines may not participate in particulate averaging, trading, or banking.

(f) Banking of NO_X and particulate emission credits:

(1) *Credit deposits.* (i) Under this phase of the banking program, emission credits may be banked from engine families produced during the three model years prior to the effective model year of the new HDE NO_X or particulate emission standard. Credits may not be banked from engine families made during any other model years.

(ii) Manufacturers may bank credits only after the end of the model year and after EPA has reviewed their end-of-year report. During the model year and before submittal of the end-of-year report, credits originally designated in the certification process for banking will be considered reserved and may be redesignated for trading or averaging.

(2) *Credit withdrawals.* (i) After being generated, banked/reserved credits shall be available for use three model years prior to, through three model years immediately after the effective date of the new HDE NO_X or particulate emission standard, as applicable. However, credits not used within the period specified above shall be forfeited.

(ii) Manufacturers withdrawing banked emission credits shall indicate so during certification and in their credit reports, as described in § 86.091–23.

(3) *Use of banked emission credits.* The use of banked credits shall be within the averaging set and other restrictions described in paragraphs (d) and (e) of this section, and only for the following purposes:

(i) Banked credits may be used in averaging, trading, or in any combination thereof, during the certification period. Credits declared for banking from the previous model year but unreviewed by EPA may also be used. However, they may be revoked at a later time following EPA review of the end-of-year report or any subsequent audit actions.

(ii) Banked credits may not be used for NO_X or particulate averaging and trading to offset emissions that exceed an FEL. Banked credits may not be used to remedy an in-use nonconformity determined by a Selective Enforcement Audit or by recall testing. However, banked credits may be used for subsequent production of the engine family if the manufacturer elects to recertify to a higher FEL.

(g)(1) For purposes of this paragraph (g), assume NO_X and particulate nonconformance penalties (NCPs) will be available for the 1991 and later model year HDEs.

(2) Engine families paying an NCP for noncompliance of any emission standard may not:

(i) Participate in the averaging program,

(ii) Generate emission credits for any pollutant under banking and trading, and

(iii) Use emission credits for any pollutant from banking and trading.

(3) If a manufacturer has any engine family to which application of NCPs and averaging, banking, and trading credits is desired, that family must be separated into two distinct families. One family, whose FEL equals the standard, must use NCPs only, while the other, whose FEL does not equal the standard, must use emission credits only.

(4) If a manufacturer has any engine family in a given averaging set which is using NO_X and/or particulate NCPs, none of that manufacturer's engine families in that averaging set may generate credits for banking and trading.

(h) In the event of a negative credit balance in a trading situation, both the buyer and the seller would be liable.

(i) Certification fuel used for credit generation must be of a type that is both available in use and expected to be used by the engine purchaser. Therefore, upon request by the Administrator, the engine manufacturer must provide information acceptable to the Administrator that the designated fuel is readily available commercially and would be used in customer service.

[59 FR 14106, Mar. 25, 1994]

§ 86.092–23 Required data.

(a) The manufacturer shall perform the tests required by the applicable test procedures, and submit to the Administrator the following information: *Provided, however,* That if requested by the manufacturer, the Administrator may waive any requirement of this section for testing of vehicle (or engine) for which emission data are available or will be made available under the provisions of § 86.091–29.

(b)(1)(i) Exhaust emission durability data on such light-duty vehicles tested in accordance with applicable test procedures and in such numbers as specified, which will show the performance of the systems installed on or incorporated in the vehicle for extended mileage, as well as a record of all pertinent maintenance performed on the test vehicles.

(ii) Exhaust emission deterioration factors for light-duty trucks and heavy-duty engines, and all test data that are derived from the testing described under § 86.091–21(b)(4)(iii)(A), as well as a record of all pertinent maintenance. Such testing shall be designed and conducted in accordance with good engineering practice to assure that the engines covered by a certificate issued under § 86.091–30 will meet the emission standards (or family emission limits, as appropriate) in § 86.091–9, § 86.091–10, or § 86.091–11 as appropriate, in actual use for the useful life of the engine.

(2) For light-duty vehicles and light-duty trucks, evaporative emission deterioration factors for each evaporative emission family-evaporative emission control system combination and all test data that are derived from testing described under § 86.091–21(b)(4)(i) designed and conducted in accordance with good engineering practice to assure that the vehicles covered by a certificate issued under § 86.091–30 will meet the evaporative emission standards in § 86.091–8 or § 86.091–9, as appropriate, for the useful life of the vehicle.

(3) For heavy-duty vehicles equipped with gasoline-fueled or methanol-fueled engines, evaporative emission deterioration factors for each evaporative emission family-evaporative emission control system combination identified in accordance with § 86.091–21(b)(4)(ii). Furthermore, a statement

that the test procedure(s) used to derive the deterioration factors includes, but need not be limited to, a consideration of the ambient effects of ozone and temperature fluctuations, and the service accumulation effects of vibration, time, and vapor saturation and purge cycling. The deterioration factor test procedure shall be designed and conducted in accordance with good engineering practice to assure that the vehicles covered by a certificate issued under § 86.091–30 will meet the evaporative emission standards in § 86.091–10 and § 86.091–11 in actual use for the useful life of the engine. Furthermore, a statement that a description of the test procedure, as well as all data, analyses and evaluations, is available to the Administrator upon request.

(4)(i) For heavy-duty vehicles with a Gross Vehicle Weight Rating of up to 26,000 lbs and equipped with gasoline-fueled or methanol-fueled engines, a written statement to the Administrator certifying that the manufacturer's vehicles meet the standards of § 86.091–10 or § 86.091–11 (as applicable) as determined by the provisions of § 86.091–28. Furthermore, a written statement to the Administrator that all data, analyses, test procedures, evaluations, and other documents, on which the above statement is based, are available to the Administrator upon request.

(ii) For heavy-duty vehicles with a Gross Vehicle Weight Rating of greater than 26,000 lbs and equipped with gasoline-fueled or methanol-fueled engines, a written statement to the Administrator certifying that the manufacturer's evaporative emission control systems are designed, using good engineering practice, to meet the standards of § 86.091–10 or § 86.091–11 (as applicable) as determined by the provisions of § 86.091–28. Furthermore, a written statement to the Administrator that all data, analyses, test procedures, evaluations, and other documents, on which the above statement is based, are available to the Administrator upon request.

(c) *Emission data.* (1) Emission data, including in the case of methanol fuel, methanol, formaldehyde and total hydrocarbon equivalent on such vehicles tested in accordance with applicable test procedures and in such numbers as specified. These data shall include zero-mile data, if generated and emission data generated for certification as required under § 86.090–26(a)(3)(i) or § 86.090–26(a)(3)(ii). In lieu of providing emission data on idle CO emissions, smoke emissions or particulate emissions from methanol-fueled diesel certification vehicles the Administrator may, on request of the manufacturer, allow the manufacturer to demonstrate (on the basis of previous emission tests, development tests, or other information) that the engine will conform with the applicable emission standards of § 86.090–8 or § 86.090–9.

(2) *Certification engines.* Emission data on such engines tested in accordance with applicable emission test procedures of this subpart and in such numbers as specified. These data shall include zero-hour data, if generated, and emission data generated for certification as required under § 86.090–26(c)(4). In lieu of providing emission data on idle CO emissions or particulate emissions from methanol-fueled diesel certification engines, or on CO emissions from petroleum-fueled or methanol-fueled diesel certification engines the Administrator may, on request of the manufacturer, allow the manufacturer to demonstrate (on the basis of previous emission tests, development tests, or other information) that the engine will conform with the applicable emission standards of § 86.091–11.

(d) A statement that the vehicles (or engines) for which certification is requested conform to the requirements in § 86.084–5(b), and that the descriptions of tests performed to ascertain compliance with the general standards in § 86.084–5(b), and the data derived from such tests, are available to the Administrator upon request.

(e)(1) A statement that the test vehicles (or test engines) with respect to which data are submitted to demonstrate compliance with the applicable standards (or family emission limits, as appropriate) of this subpart are in all material respects as described in the manufacturer's application for certification, have been tested in accordance with the applicable test procedures utilizing the fuels and equipment

described in the application for certification and that on the basis of such tests the vehicles (or engines) conform to the requirements of this part. If such statements cannot be made with respect to any vehicle (or engine) tested, the vehicle (or engine) shall be identified, and all pertinent data relating thereto shall be supplied to the Administrator. If, on the basis of the data supplied and any additional data as required by the Administrator, the Administrator determines that the test vehicles (or test engine) was not as described in the application for certification or was not tested in accordance with the applicable test procedures utilizing the fuels and equipment as described in the application for certification, the Administrator may make the determination that the vehicle (or engine) does not meet the applicable standards (or family emission limits, as appropriate). The provisions of § 86.091–30(b) shall then be followed.

(2) For evaporative emission durability, or light-duty truck or heavy-duty engine exhaust emission durability, a statement of compliance with paragraph (b)(1)(ii), (b)(2), or (b)(3) of this section, as applicable.

(f) Additionally, manufacturers participating in the particulate averaging program for diesel light-duty vehicles and diesel light-duty trucks shall submit:

(1) In the application for certification, a statement that the vehicles for which certification is requested will not, to the best of the manufacturer's belief, when included in the manufacturer's production-weighted average emission level, cause the applicable particulate standard(s) to be exceeded.

(2) No longer than 90 days after the end of a given model year of production of engine families included in one of the diesel particulate averaging programs, the number of vehicles produced in each engine family at each certified particulate FEL, along with the resulting production-weighted average particulate emission level.

(g) Additionally, manufacturers participating in the NO_X averaging program for light-duty trucks shall submit:

(1) In the application for certification, a statement that the vehicles for which certification is required will not, to the best of the manufacturer's belief, when included in the manufacturer's production-weighted average emission level, cause the applicable NO_X standard(s) to be exceeded.

(2) No longer than 90 days after the end of a given model year of production of engine families included in the NO_X averaging program, the number of vehicles produced in each engine family at each certified NO_X emission level.

(h) Additionally, manufacturers participating in any of the NO_X and/or particulate averaging, trading, or banking programs for heavy-duty engines shall submit for each participating family:

(1) In the application for certification:

(i) A statement that the engines for which certification is requested will not, to the best of the manufacturer's belief, when included in any of the averaging, trading, or banking programs cause the applicable NO_X or particulate standard(s) to be exceeded.

(ii) The type (NO_X or particulate) and the projected number of credits generated/needed for this family, the applicable averaging set, the projected U.S. (49-state) production volumes, by quarter, NCPs in use on a similar family and the values required to calculate credits as given in § 86.091–15. Manufacturers shall also submit how and where credit surpluses are to be dispersed and how and through what means credit deficits are to be met, as explained in § 86.091–15. The application must project that each engine family will be in compliance with the applicable NO_X and/or particulate emission standards based on the engine mass emissions, and credits from averaging, trading and banking.

(2) End-of-year reports for each engine family participating in any of the averaging, trading, or banking programs.

(i) These reports shall be submitted within 90 days of the end of the model year to: Director, Manufacturers Operations Division (EN–6405J), U.S. Environmental Protection Agency, 401 M Street SW., Washington, DC 20460.

(ii) These reports shall indicate the engine family, the averaging set, the actual U.S. (49-state) production volume, the values required to calculate

credits as given in §86.091–15, the resulting type (NO_X or particulate) and number of credits generated/required, and the NCPs in use on a similar NCP family. Manufacturers shall also submit how and where credit surpluses were dispersed (or are to be banked) and how and through what means credit deficits were met. Copies of contracts related to credit trading must also be included or supplied by the broker if applicable. The report shall also include a calculation of credit balances to show that net mass emissions balances are within those allowed by the emission standards (equal to or greater than a zero credit balance). The credit discount factor described in §86.091–15 must be included as required.

(iii) The 49-state production counts for end-of-year reports shall be based on the location of the first point of retail sale (e.g., customer, dealer, secondary manufacturer) by the manufacturer.

(iv) Errors discovered by EPA or the manufacturer in the end-of-year report, including changes in the 49 state production counts, may be corrected up to 180 days subsequent to submission of the end-of-year report. Errors discovered by EPA after 180 days shall be corrected if credits are reduced. Errors in the manufacturer's favor will not be corrected if discovered after the 180 day correction period allowed.

(i) Failure by a manufacturer participating in the averaging, trading, or banking programs to submit any quarterly or end-of-year report (as applicable) in the specified time for all vehicles and engines that are part of an averaging set is a violation of section 203(a)(1) of the Clean Air Act for each such vehicle and engine.

(j) Failure by a manufacturer generating credits for deposit only in either the HDE NO_X or particulate banking programs to submit their end-of-year reports in the applicable specified time period (i.e., 90 days after the end of the model year) shall result in the credits not being available for use until such reports are received and reviewed by EPA. Use of projected credits pending EPA review will not be permitted in these circumstances.

(k) Engine families certified using NCPs are not required to meet the requirements outlined above.

[59 FR 14108, Mar. 25, 1994]

§86.092–24 Test vehicles and engines.

(a)(1) The vehicles or engines covered by an application for certification will be divided into groupings of engines which are expected to have similar emission characteristics throughout their useful life. Each group of engines with similar emission characteristics shall be defined as a separate engine family.

(2) To be classed in the same engine family, engines must be identical in all the following respects:

(i) The cylinder bore center-to-center dimensions.

(ii)–(iii) [Reserved]

(iv) The cylinder block configuration (air cooled or water cooled; L–6, 90° V–8, etc.).

(v) The location of the intake and exhaust valves (or ports).

(vi) The method of air aspiration.

(vii) The combustion cycle.

(viii) Catalytic converter characteristics.

(ix) Thermal reactor characteristics.

(x) Type of air inlet cooler (e.g., intercoolers and after-coolers) for diesel heavy-duty engines.

(3)(i) Engines identical in all the respects listed in paragraph (a)(2) of this section may be further divided into different engine families if the Administrator determines that they may be expected to have different emission characteristics. This determination will be based upon a consideration of the following features of each engine:

(A) The bore and stroke.

(B) The surface-to-volume ratio of the nominally dimensioned cylinder at the top dead center positions.

(C) The intake manifold induction port size and configuration.

(D) The exhaust manifold port size and configuration.

(E) The intake and exhaust valve sizes.

(F) The fuel system.

(G) The camshaft timing and ignition or injection timing characteristics.

(ii) Light-duty trucks and heavy-duty engines produced in different model years and distinguishable in the

respects listed in paragraph (a)(2) of this section shall be treated as belonging to a single engine family if the Administrator requires it, after determining that the engines may be expected to have similar emission deterioration characteristics.

(4) Where engines are of a type which cannot be divided into engine families based upon the criteria listed in paragraphs (a)(2) and (a)(3) of this section, the Administrator will establish families for those engines based upon those features most related to their emission characteristics. Engines that are eligible to be included in the same engine family based on the criteria in paragraphs (a)(2) and (a)(3)(i) of this section may be further divided into different engine families if the manufacturer determines that they may be expected to have different emission characteristics. This determination will be based upon a consideration of the following features of each engine:

(i) The dimension from the center line of the crankshaft to the center line of the camshaft.

(ii) The dimension from the center line of the crankshaft to the top of the cylinder block head face.

(iii) The size of the intake and exhaust valves (or ports).

(5) The gasoline-fueled and methanol-fueled light-duty vehicles and light-duty trucks covered by an application for certification will be divided into groupings which are expected to have similar evaporative emission characteristics throughout their useful life. Each group of vehicles with similar evaporative emission characteristics shall be defined as a separate evaporative emission family.

(6) For gasoline-fueled or methanol-fueled light-duty vehicles and light-duty trucks to be classed in the same evaporative emission family, vehicles must be similar with respect to:

(i) Type of vapor storage device (e.g., canister, air cleaner, crankcase).

(ii) Basic canister design.

(iii) Fuel system.

(7) Where vehicles are of a type which cannot be divided into evaporative emission families based on the criteria listed above, the Administrator will establish families for those vehicles based upon the features most related to their evaporative emission characteristics.

(8)(i) If the manufacturer elects to participate in the Alternative Durability Program, the engine families covered by an application for certification shall be grouped based upon similar engine design and emission control system characteristics. Each of these groups shall constitute a separate engine family group.

(ii) To be classed in the same engine family group, engine families must contain engines identical in all of the following respects:

(A) The combustion cycle.

(B) The cylinder block configuration (air-cooled or water-cooled; L–6, V–8, rotary, etc.).

(C) Displacement (engines of different displacement within 50 cubic inches or 15 percent of the largest displacement and contained within a multi-displacement engine family will be included in the same engine family group).

(D) Catalytic converter usage and basic type (non-catalyst, oxidation catalyst only, three-way catalyst equipped).

(9) Engine families identical in all respects listed in paragraph (a)(8) of this section may be further divided into different engine family groups if the Administrator determines that they are expected to have significantly different exhaust emission control system deterioration characteristics.

(10) A manufacturer may request the Administrator to include in an engine family group, engine families in addition to those grouped under the provisions of paragraph (a)(8) of this section. This request must be accompanied by information the manufacturer believes supports the inclusion of these additional engine families.

(11) A manufacturer may combine into a single engine family group those light-duty vehicle and light-duty truck engine families which otherwise meet the requirements of paragraphs (a)(8) through (a)(10) of this section.

(12) The vehicles covered by an application for certification equipped with gasoline-fueled and methanol-fueled heavy-duty engines will be divided into groupings of vehicles on the basis of physical features which are expected to

affect evaporative emissions. Each group of vehicles with similar features shall be defined as a separate evaporative emission family.

(13) For gasoline-fueled or methanol-fueled heavy-duty vehicles to be classified in the same evaporative emission family, vehicles must be identical with respect to:

(i) Method of fuel/air metering (i.e., carburetion versus fuel injection).

(ii) Carburetor bowl fuel volume, within a 10 cc range.

(14) For vehicles equipped with gasoline-fueled and methanol-fueled heavy-duty engines to be classified in the same evaporative emission control system, vehicles must be identical with respect to:

(i) Method of vapor storage.

(ii) Method of carburetor sealing.

(iii) Method of air cleaner sealing.

(iv) Vapor storage working capacity, within a 20g range.

(v) Number of storage devices.

(vi) Method of purging stored vapors.

(vii) Method of venting the carburetor during both engine off and engine operation.

(viii) Liquid fuel hose material.

(ix) Vapor storage material.

(15) Where vehicles equipped with gasoline-fueled or methanol-fueled heavy-duty engines are types which cannot be divided into evaporative emission family-control system combinations based on the criteria listed above, the Administrator will establish evaporative emission family-control system combinations for those vehicles based on features most related to their evaporative emission characteristics.

(16) No 1992 or later model year heavy-duty engine which is to be used to generate emission credits for 1992 and later banking, trading and averaging programs may also utilize nonconformance penalties (NCPs). Use of an NCP thus becomes an engine family criterion.

(i) Use of either a NO_X or a particulate matter NCP by an engine family precludes that family from generating either NO_X or particulate matter emission credits.

(ii) If a manufacturer desires to use both banked credits and NCPs on an engine family, two separate engine families must be established. One engine family must consist of engines certified for only credit use following the procedure specified in this subpart. The other engine family must be certified for only NCP use following the procedure as specified in 40 CFR part 86, subpart L.

(b) *Emission data*—(1) *Emission-data vehicles.* Paragraph (b)(1) of this section applies to light-duty vehicle and light-duty truck emission-data vehicles.

(i) Vehicles will be chosen to be operated and tested for emission data based upon engine family groupings. Within each engine family, one test vehicle will be selected based on the following criteria: The Administrator shall select the vehicle with the heaviest equivalent test weight (including options) within the family. Then within that vehicle the Administrator shall select, in the order listed, the highest road-load power, largest displacement, the transmission with the highest numerical final gear ratio (including overdrive), the highest numerical axle ratio offered in that engine family, and the maximum fuel flow calibration.

(ii) The Administrator shall select one additional test vehicle from within each engine family. The vehicle selected shall be the vehicle expected to exhibit the highest emissions of those vehicles remaining in the engine family. If all vehicles within the engine family are similar the Administrator may waive the requirements of this paragraph.

(iii) Within an engine family and exhaust emission control system, the manufacturer may alter any emission-data vehicle (or other vehicles such as including current or previous model year emission-data vehicles, fuel economy data vehicles, and development vehicles provided they meet emission-data vehicles' protocol) to represent more than one selection under paragraph (b)(1) (i), (ii), (iv), or (vii) of this section.

(iv) If the vehicles selected in accordance with paragraphs (b)(1) (i) and (ii) of this section do not represent each engine-system combination, then one vehicle of each engine-system combination not represented will be selected by the Administrator. The vehicle selected shall be the vehicle expected to exhibit the highest emissions of those

vehicles remaining in the engine family.

(v) For high-altitude exhaust emission compliance for each engine family, the manufacturer shall follow one of the following procedures:

(A) The manufacturer will select for testing under high-altitude conditions the vehicle expected to exhibit the highest emissions from the nonexempt vehicles selected in accordance with paragraphs (b)(1) (ii), (iii), and (iv) of this section or,

(B) In lieu of testing vehicles according to paragraph (b)(1)(v)(A) of this section, a manufacturer may provide a statement in its application for certification that, based on the manufacturer's engineering evaluation of such high-altitude emission testing as the manufacturer deems appropriate,

(*1*) That all light-duty vehicles not exempt under § 86.090–8(h) comply with the emission standards at high altitude; and

(*2*) That light-duty trucks sold for principal use at designated high-altitude locations comply with the high-altitude emission requirements and that all light-duty trucks sold at low altitude, which are not exempt under § 86.091–9(g)(2), are capable of being modified to meet high-altitude standards.

(vi) If 90 percent or more of the engine family sales will be in California, a manufacturer may substitute emission-data vehicles selected by the California Air Resources Board criteria for the selections specified in paragraphs (b)(1) (i), (ii), and (iv) of this section.

(vii)(A) Vehicles of each evaporative emission family will be divided into evaporative emission control systems.

(B) The Administrator will select the vehicle expected to exhibit the highest evaporative emissions, from within each evaporative family to be certified, from among the vehicles represented by the exhaust emission-data selections for the engine family, unless evaporative testing has already been completed on the vehicle expected to exhibit the highest evaporative emissions for the evaporative family as part of another engine family's testing.

(C) If the vehicles selected in accordance with paragraph (b)(1)(vii)(B) of this section do not represent each evaporative emission control system then the Administrator will select the highest expected evaporative emission vehicle from within the unrepresented evaporative system.

(viii) For high-altitude evaporative emission compliance for each evaporative emission family, the manufacturer shall follow one of the following procedures:

(A) The manufacturer will select for testing under high-altitude conditions the one nonexempt vehicle previously selected under paragraphs (b)(1)(vii) (B) or (C) of this section which is expected to have the highest level of evaporative emissions when operated at high altitude or

(B) In lieu of testing vehicles according to paragraph (b)(1)(viii)(A) of this section, a manufacturer may provide a statement in its application for certification that based on the manufacturer's engineering evaluation of such high-altitude emission testing as the manufacturer deems appropriate,

(*1*) That all light-duty vehicles not exempt under § 86.090–8(h) comply with the emission standards at high altitude, and

(*2*) That light-duty trucks sold for principal use at designated high-altitude locations comply with the high-altitude emission requirements and that all light-duty trucks sold at low-altitude, which are not exempt under § 86.091–9(g)(2), are capable of being modified to meet high-altitude standards.

(ix) Vehicles selected under paragraph (b)(1)(v)(A) of this section may be used to satisfy the requirements of (b)(1)(viii)(A) of this section.

(x) *Light-duty trucks only:* (A) The manufacturer may reconfigure any of the low-altitude emission-data vehicles to represent the vehicle configuration required to be tested at high altitude.

(B) The manufacturer is not required to test the reconfigured vehicle at low altitude.

(2) *Otto-cycle heavy-duty emission-data engines.* Paragraph (b)(2) of this section applies to Otto-cycle heavy-duty engines.

(i)–(ii) [Reserved]

(iii) The Administrator shall select a maximum of two engines within each

engine family based upon features indicating that they may have the highest emission levels of the engines in the engine family as follows:

(A) The Administrator shall select one emission-data engine first based on the largest displacement within the engine family. Then within the largest displacement the Administrator shall select, in the order listed, highest fuel flow at the speed of maximum rated torque, the engine with the most advanced spark timing, no EGR or lowest EGR flow, and no air pump or lowest actual flow air pump.

(B) The Administrator shall select one additional engine, from within each engine family. The engine selected shall be the engine expected to exhibit the highest emissions of those engines remaining in the engine family. If all engines within the engine family are similar the Administrator may waive the requirements of this paragraph.

(iv) If the engines selected in accordance with paragraph (b)(2) (ii) and (iii) of this section do not represent each engine displacement-exhaust emission control system combination, then one engine of each engine displacement-exhaust emission control system combination not represented shall be selected by the Administrator.

(v) Within an engine family/displacement/control system combination, the manufacturer may alter any emission-data engine (or other engine including current or previous model year emission-data engines and development engines provided they meet the emission-data engines' protocol) to represent more than one selection under paragraph (b)(2)(iii) of this section.

(3) *Diesel heavy-duty emission-data engines.* Paragraph (b)(3) of this section applies to diesel heavy-duty emission-data vehicles.

(i) Engines will be chosen to be run for emission data based upon engine family groupings. Within each engine family, the requirements of this paragraph must be met.

(ii) Engines of each engine family will be divided into groups based upon their exhaust emission control systems. One engine of each system combination shall be run for smoke emission data and gaseous emission data. Either the complete gaseous emission test or the complete smoke test may be conducted first. Within each combination, the engine that features the highest fuel feed per stroke, primarily at the speed of maximum rated torque and secondarily at rated speed, will usually be selected. If there are military engines with higher fuel rates than other engines in the same engine system combinations, then one military engine shall also be selected. The engine with the highest fuel feed per stroke will usually be selected.

(iii) The Administrator may select a maximum of one additional engine within each engine-system combination based upon features indicating that it may have the highest emission levels of the engines of that combination. In selecting this engine, the Administrator will consider such features as the injection system, fuel system, compression ratio, rated speed, rated horsepower, peak torque speed, and peak torque.

(iv) Within an engine family control system combination, the manufacturer may alter any emission-data engine (or other engine including current or previous model year emission-data engines and development engines provided they meet the emission-data engines' protocol) to represent more than one selection under paragraph (b)(3)(ii) and (iii) of this section.

(c) *Durability data*—(1) *Light-duty vehicle durability-data vehicles.* Paragraph (c)(1) of this section applies to light-duty vehicle durability-data vehicles.

(i) A durability-data vehicle will be selected by the Administrator to represent each engine-system combination. The vehicle selected shall be of the engine displacement with the largest projected sales volume of vehicles with that control-system combination in that engine family and will be designated by the Administration as to transmission type, fuel system, inertia weight class, and test weight.

(ii) A manufacturer may elect to operate and test additional vehicles to represent any engine-system combination. The additional vehicles must be of the same engine displacement,

transmission type, fuel system and inertia weight class as the vehicle selected for that engine-system combination in accordance with the provisions of paragraph (c)(1)(i) of this section. Notice of an intent to operate and test additional vehicles shall be given to the Administrator no later than 30 days following notification of the test fleet selection.

(2) *Light-duty trucks.* Paragraph (c)(2) of this section applies to vehicles, engines, subsystems, or components used to establish exhaust emission deterioration factors for light-duty trucks.

(i) The manufacturer shall select the vehicles, engines, subsystems, or components to be used to determine exhaust emission deterioration factors for each engine-family control system combination. Whether vehicles, engines, subsystems, or components are used, they shall be selected so that their emissions deterioration characteristics may be expected to represent those of in-use vehicles, based on good engineering judgment.

(ii) [Reserved]

(3) *Heavy-duty engines.* Paragraph (c)(3) of this section applies to engines, subsystems, or components used to establish exhaust emission deterioration factors for heavy-duty engines.

(i) The manufacturer shall select the engines, subsystems, or components to be used to determine exhaust emission deterioration factors for each engine-family control system combination. Whether engines, subsystems, or components are used, they shall be selected so that their emissions deterioration characteristics may be expected to represent those of in-use engines, based on good engineering judgment.

(ii) [Reserved]

(d) For purposes of testing under § 86.092–26 (a)(9) or (b)(11), the Administrator may require additional emission-data vehicles (or emission-data engines) and durability-data vehicles (light-duty vehicles only) identical in all material respects to vehicles (or engines) selected in accordance with paragraphs (b) and (c) of this section, *Provided* That the number of vehicles (or engines) selected shall not increase the size of either the emission-data fleet or the durability-data fleet by more than 20 percent or one vehicle (or engine), whichever is greater.

(e)(1) [Reserved]

(2) Any manufacturer may request to certify engine families with combined total sales of fewer than 10,000 light-duty vehicles, light-duty trucks, heavy-duty vehicles, and heavy-duty engines utilizing the procedures contained in § 86.092–14 of this subpart for emission-data vehicle selection and determination of deterioration factors. The deterioration factors shall be applied only to entire engine families.

(f) In lieu of testing an emission-data or durability-data vehicle (or engine) selected under paragraph (b) or (c) of this section, and submitting data therefore, a manufacturer may, with the prior written approval of the Administrator, submit exhaust emission data and/or fuel evaporative emission data, as applicable on a similar vehicle (or engine) for which certification has previously been obtained or for which all applicable data required under § 86.091–23 has previously been submitted.

(g)(1) This paragraph applies to light-duty vehicles and light-duty trucks, but does not apply to the production vehicles selected under paragraph (h) of this section.

(2)(i) Where it is expected that more than 33 percent of a carline, within an engine-system combination, may be equipped with an item (whether that item is standard equipment or an option), the full estimated weight of that item shall be included in the curb weight computation of each vehicle available with that item in that carline, within that engine-system combination.

(ii) Where it is expected that 33 percent or less of the carline, within an engine-system combination, will be equipped with an item (whether that item is standard equipment or an option), no weight for that item will be added in computing the curb weight for any vehicle in that carline, within that engine-system combination, unless that item is standard equipment on the vehicle.

(iii) In the case of mutually exclusive options, only the weight of the heavier option will be added in computing the curb weight.

(iv) Optional equipment weighing less than three pounds per item need not be considered.

(3)(i) Where it is expected that more than 33 percent of a carline, within an engine-system combination, will be equipped with an item (whether that item is standard equipment or an option) that can reasonably be expected to influence emissions, then such items shall actually be installed (unless excluded under paragraph (g)(3)(ii) of this section) on all emission-data and durability-data vehicles of that carline, within that engine-system combination, on which the items are intended to be offered in production. Items that can reasonably be expected to influence emissions are: air conditioning, power steering, power brakes, and other items determined by the Administrator.

(ii) If the manufacturer determines by test data or engineering evaluation that the actual installation of the optional equipment required by paragraph (g)(3)(i) of this section does not affect the emissions or fuel economy values, the optional equipment need not be installed on the test vehicle.

(iii) The weight of the options shall be included in the design curb weight and also be represented in the weight of the test vehicles.

(iv) The engineering evaluation, including any test data, used to support the deletion of optional equipment from test vehicles, shall be maintained by the manufacturer and shall be made available to the Administrator upon request.

(4) Where it is expected that 33 percent or less of a carline within an engine-system combination will be equipped with an item (whether that item is standard equipment or an option) that can reasonably be expected to influence emissions, that item shall not be installed on any emission-data vehicle or durability-data vehicle of that carline, within that engine-system combination, unless that item is standard equipment on that vehicle or specifically required by the Administrator.

(h) *Alternative Durability Program durability-data vehicles.* This section applies to light-duty vehicle and light-duty truck durability-data vehicles selected under the Alternative Durability Program described in § 86.085–13.

(1) To update the durability data to be used to determine a deterioration factor for each engine family group, the Administrator will select durability-data vehicles from the manufacturer's production line. Production vehicles will be selected from each model year's production for those vehicles certified using the Alternative Durability Program procedures.

(i) The Administrator shall select the production durability-data vehicle designs from the designs that the manufacturer offers for sale. For each model year and for each engine family group, the Administrator may select production durability-data vehicle designs of equal number to the number of engine families within the engine family group, up to a maximum of three vehicles.

(ii) The production durability-data vehicles representing the designs selected in paragraph (h)(1)(i) of this section will be randomly selected from the manufacturer's production. The Administrator will make these random selections unless the manufacturer (with prior approval of the Administrator) elects to make the random selections.

(iii) The manufacturer may select additional production durability-data vehicle designs from within the engine family group. The production durability-data vehicles representing these designs shall be randomly selected from the manufacturer's production in accordance with paragraph (h)(1)(ii) of this section.

(iv) For each production durability-data vehicle selected under paragraph (h)(1) of this section, the manufacturer shall provide to the Administrator (before the vehicle is tested or begins service accumulation) the vehicle identification number. Before the vehicle begins service accumulation the manufacturer shall also provide the Administrator with a description of the durability-data vehicle as specified by the Administrator.

(v) In lieu of testing a production durability-data vehicle selected under paragraph (h)(1) of this section, and

submitting data therefrom, a manufacturer may, with the prior written approval of the Administrator, submit exhaust emission data from a production vehicle of the same configuration for which all applicable data has previously been submitted.

(2) If, within an existing engine family group, a manufacturer requests to certify vehicles of a new design, engine family, emission control system, or with any other durability-related design difference, the Administrator will determine if the existing engine family group deterioration factor is appropriate for the new design. If the Administrator cannot make this determination or deems the deterioration factor not appropriate, the Administrator shall select preproduction durability-data vehicles under the provisions of paragraph (c) of this section. If vehicles are then certified using the new design, the Administrator may select production vehicles with the new design under the provisions of paragraph (h)(1) of this section.

(3) If a manufacturer requests to certify vehicles of a new design that the Administrator determines are a new engine family group, the Administrator shall select preproduction durability-data vehicles under the provisions of paragraph (c) of this section. If vehicles are then certified using the new design, the Administrator may select production vehicles of that design under the provisions of paragraph (h)(1) of this section.

[55 FR 7190, Feb. 28, 1990, as amended at 55 FR 30626, July 26, 1990]

§ 86.092–26 Mileage and service accumulation; emission measurements.

(a)(1) Paragraph (a) of this section applies to light-duty vehicles.

(2) The procedure for mileage accumulation will be the Durability Driving Schedule as specified in appendix IV to this part. A modified procedure may also be used if approved in advance by the Administrator. Except with the advance approval of the Administrator, all vehicles will accumulate mileage at a measured curb weight which is within 100 pounds of the estimated curb weight. If the loaded vehicle weight is within 100 pounds of being included in the next higher inertia weight class as specified in § 86.129, the manufacturer may elect to conduct the respect emission tests at higher loaded vehicle weight.

(3) *Emission-data vehicles.* Unless otherwise provided for in § 86.091–23(a), emission-data vehicles shall be operated and tested as follows:

(i) *Otto-cycle.* (A) The manufacturer shall determine, for each engine family, the mileage at which the engine-system combination is stabilized for emission-data testing. The manufacturer shall maintain, and provide to the Administrator if requested, a record of the rationale used in making this determination. The manufacturer may elect to accumulate 4,000 miles on each test vehicle within an engine family without making a determination. The manufacturer must accumulate a minimum of 2,000 miles (3,219 kilometers) on each test vehicle within an engine family. All test vehicle mileage must be accurately determined, recorded, and reported to the Administrator. Any vehicle used to represent emission-data vehicle selections under § 86.092–24(b)(1) shall be equipped with an engine and emission control system that has accumulated the mileage the manufacturer chose to accumulate on the test vehicle. Fuel economy data generated from certification vehicles selected in accordance with § 86.092–24(b)(1) with engine-system combinations that have accumulated more than 10,000 kilometers (6,200 miles) shall be factored in accordance with § 600.006–87(c). Complete exhaust and evaporative (if required) emission tests shall be conducted for each emission-data vehicle selection under § 86.092–24(b)(1). The Administrator may determine under § 86.092–24(f) that no testing is required.

(B) Emission tests for emission-data vehicle(s) selected for testing under § 86.092–24(b)(1)(v) or (viii) shall be conducted at the mileage (2,000 mile minimum) at which the engine-system combination is stabilized for emission testing under high-altitude conditions.

(C) Exhaust and evaporative emissions tests for emission-data vehicle(s) selected for testing under § 86.092–24(b)(1) (i), (ii), (iii), (iv), or (vii)(B) shall be conducted at the mileage (2,000 mile minimum) at which the engine-

system combination is stabilized for emission testing under low-altitude conditions.

(D) For each engine family, the manufacturer will either select one vehicle previously selected under §86.092–24(b)(1) (i) through (iv) to be tested under high-altitude conditions or provide a statement in accordance with §86.092–24(b)(1)(v). Vehicles shall meet emission standards under both low- and high-altitude conditions without manual adjustments or modifications. In addition, any emission control device used to conform with the emission standards under high-altitude conditions shall initially actuate (automatically) no higher than 4,000 feet above sea level.

(4)(i) *Durability data vehicles.* (A) Unless otherwise provided for in §86.091–23(a), each durability-data vehicle shall be driven, with all emission control systems installed and operating, for 50,000 miles or such lesser distance as the Administrator may agree to as meeting the objective of this procedure.

(B) Complete exhaust emission tests shall be made at test point mileage intervals that the manufacturer determines.

(C) At a minimum, two complete exhaust emission tests shall be made. The first test shall be made at a distance not greater than 6,250 miles. The last shall be made at 50,000 miles.

(D) The mileage interval between test points must be of equal length except for the interval between zero miles and the first test, and any interval before or after testing conducted in conjunction with vehicle maintenance as specified in §86.090–25(g)(2).

(ii) The manufacturer may, at its option, alter the durability-data vehicle at the selected test point to represent emission-data vehicle(s) within the same engine-system combination and perform emission tests on the altered vehicle. Upon completion of emission testing, the manufacturer may return the test vehicle to the durability-data vehicle configuration and continue mileage accumulation.

(5)(i) All tests required by this subpart on emission-data vehicles shall be conducted at a mileage equal to or greater than the mileage the manufacturer determines under paragraph (a)(3) of this section.

(ii) All tests required by this subpart on durability-data vehicles shall be conducted within 250 miles of each of the test points.

(6)(i)(A) The manufacturer may conduct multiple tests at any test point at which the data are intended to be used in the deterioration factor. At each test point where multiple tests are conducted, the test results from all valid tests shall be averaged to determine the data point to be used in the deterioration factor calculation, except under paragraph (a)(6)(i)(B) of this section. The test results from emission tests performed before maintenance affecting emissions shall not be averaged with test results after the maintenance.

(B) The manufacturer is not required to average multiple tests if the manufacturer conducts no more than three tests at each test point and if the number of tests at each test point is equal. All test points must be treated the same for all exhaust pollutants.

(ii) The results of all emission testing shall be supplied to the Administrator. The manufacturer shall furnish to the Administrator explanation for voiding any test. The Administrator will determine if voiding the test was appropriate based upon the explanation given by the manufacturer for the voided test. Tests between test points may be conducted as required by the Administrator. Data from all tests (including voided tests) may be submitted weekly to the Administrator, but shall be air posted or delivered to the Administrator within 7 days after completion of the test. In addition, all test data shall be compiled and provided to the Administrator in accordance with §86.091–23. Where the Administrator conducts a test on a durability-data vehicle at a prescribed test point, the results of that test will be used in the calculation of the deterioration factor.

(iii) The results of all emission tests shall be rounded, using the ''Rounding Off Method'' specified in ASTM E 29–67, to the number of places to the right of the decimal point indicated by expressing the applicable emission standard of this subpart to one additional significant figure.

(7) Whenever a manufacturer intends to operate and test a vehicle which may be used for emission or durability data, the manufacturer shall retain in its records all information concerning all emissions tests and maintenance, including vehicle alterations to represent other vehicle selections. For emission-data vehicles, this information shall be submitted, including the vehicle description and specification information required by the Administrator, to the Administrator following the emission-data test. For durability-data vehicles, this information shall be submitted following the 5,000-mile test.

(8) Once a manufacturer submits the information required in paragraphs (a)(7) of this section for a durability-data vehicle, the manufacturer shall continue to run the vehicle to 50,000 miles, and the data from the vehicle will be used in the calculations under § 86.091–28. Discontinuation of a durability-data vehicle shall be allowed only with the consent of the Administrator.

(9)(i) The Administrator may elect to operate and test any test vehicle during all or any part of the mileage accumulation and testing procedure. In such cases, the manufacturer shall provide the vehicle(s) to the Administrator with all information necessary to conduct this testing.

(ii) The test procedures in §§ 86.106 through 86.145 will be followed by the Administrator. The Administrator will test the vehicles at each test point. Maintenance may be performed by the manufacturer under such conditions as the Administrator may prescribe.

(iii) The data developed by the Administrator for the engine-system combination shall be combined with any applicable data supplied by the manufacturer on other vehicles of that combination to determine the applicable deterioration factors for the combination. In the case of a significant discrepancy between data developed by the Administrator and that submitted by the manufacturer, the Administrator's data shall be used in the determination of deterioration factors.

(10) Emission testing of any type with respect to any certification vehicle other than that specified in this part is not allowed except as such testing may be specifically authorized by the Administrator.

(11) This section does not apply to testing conducted to meet the requirements of § 86.091–23(b)(2).

(b)(1) Paragraph (b) of this section applies to light-duty trucks.

(2) There are three types of mileage or service accumulation applicable to light-duty trucks:

(i) Mileage or service accumulation on vehicles, engines, subsystems, or components selected by the manufacturer under § 86.092–24(c)(2)(i). The manufacturer determines the form and extent of this mileage or service accumulation, consistent with good engineering practice, and describes it in the application for certification.

(ii) Mileage accumulation of the duration selected by the manufacturer on emission-data vehicles selected under § 86.092–24(b)(1). The procedure for mileage accumulation will be the Durability Driving Schedule as specified in appendix IV to this part. A modified procedure may also be used if approved in advance by the Administrator. Except with the advance approval of the Administrator, all vehicles will accumulate mileage at a measured curb weight which is within 100 pounds of the estimated curb weight. If the loaded vehicle weight is within 100 pounds of being included in the next higher inertia weight class as specified in § 86.129, the manufacturer may elect to conduct the respective emission tests at the test weight corresponding to the higher loaded vehicle weight.

(iii) Service or mileage accumulation which may be part of the test procedures used by the manufacturer to establish evaporative emission deterioration factors.

(3) Exhaust emission deterioration factors will be determined on the basis of the mileage or service accumulation described in paragraph (b)(2)(i) of this section and related testing, according to the manufacturer's procedures.

(4) Each emission-data vehicle shall be operated and tested as follows:

(i) *Otto-cycle.* (A) The manufacturer shall determine, for each engine family, the mileage at which the engine-system combination is stabilized for emission-data testing. The manufacturer shall maintain, and provide to

the Administrator if requested, a record of the rationale used in making this determination. The manufacturer may elect to accumulate 4,000 miles on each test vehicle within an engine family without making a determination. The manufacturer must accumulate a minimum of 2,000 miles (3,219 kilometers) on each test vehicle within an engine family. All test vehicle mileage must be accurately determined, recorded, and reported to the Administrator. Any vehicle used to represent emission-data vehicle selections under §86.092–24(b)(1) shall be equipped with an engine and emission control system that has accumulated the mileage the manufacturer chose to accumulate on the test vehicle. Fuel economy data generated from certification vehicles selected in accordance with §86.092–24(b)(1) with engine-system combinations that have accumulated more than 10,000 kilometers (6,200 miles) shall be factored in accordance with §600.006–87(c). Complete exhaust emission tests shall be conducted for each emission-data vehicle selection under §86.092–24(b)(1). The Administrator may determine under §86.092–24(f) that no testing is required.

(B) Emission tests for emission-data vehicle(s) selected for testing under §86.092–24 (b)(1)(v) or (b)(1)(viii) shall be conducted at the mileage (2,000 mile minimum) at which the engine-system combination is stabilized for emission testing or at 6,436 kilometers (4,000 miles) under high-altitude conditions.

(C) Exhaust and evaporative emission tests for emission-data vehicle(s) selected for testing under §86.092–24(b)(1)(ii), (iii), (iv)(A), or (vii)(B) shall be conducted at the mileage (2,000 mile minimum) at which the engine-system combination is stabilized for emission testing or at 6,436 kilometer (4,000 mile) test point under low-altitude conditions.

(D) If the manufacturer recommends adjustments or modifications in order to conform to emission standards at high altitude, such adjustments or modifications shall be made to the test vehicle selected under §86.092–24(b)(1)(v) and (viii) (in accordance with the instructions to be provided to the ultimate purchaser) before being tested under high-altitude conditions.

(ii) *Diesel*. (A) The manufacturer shall determine, for each engine family, the mileage at which the engine-system combination is stabilized for emission-data testing. The manufacturer shall maintain, and provide to the Administrator if requested, a record of the rationale used in making this determination. The manufacturer may elect to accumulate 4,000 miles on each test vehicle within an engine family without making a determination. The manufacturer must accumulate a minimum of 2,000 miles (3,219 kilometers) on each test vehicle within an engine family. All test vehicle mileage must be accurately determined, recorded, and reported to the Administrator. Any vehicle used to represent emission-data vehicle selections under §86.092–24(b)(1) shall be equipped with an engine and emission control system that has accumulated the mileage the manufacturer chose to accumulate on the test vehicle. Fuel economy data generated from certification vehicles selected in accordance with §86.092–24(b)(1) with engine-system combinations that have accumulated more than 10,000 kilometers (6,200 miles) shall be factored in accordance with §600.006–87(c). Complete exhaust emission tests shall be conducted for each emission-data vehicle selection under §86.092–24(b)(1). The administrator may determine under §86.092–24(f) that no testing is required.

(B) Emission tests for emission-data vehicle(s) selected for testing under §86.092–24 (b)(1)(v) shall be conducted at the mileage (2,000 mile minimum) at which the engine-system combination is stabilized for emission testing or at the 6,436 kilometer (4,000 mile) test point under high-altitude conditions.

(C) Exhaust and evaporative emission tests for emission-data vehicle(s) selected for testing under §86.092–24 (b)(1)(ii), (iii), and (iv) shall be conducted at the mileage (2,000 mile minimum) at which the engine-system combination is stabilized for emission testing or at the 6,436 kilometer (4,000 mile) test point under low-altitude conditions.

(D) If the manufacturer recommends adjustments or modifications in order to conform to emission standards at high altitude, such adjustments or modifications shall be made to the test vehicle selected under §86.092–24(b)(1)

(v) and (viii) (in accordance with the instructions to be provided to the ultimate purchaser) before being tested under high-altitude conditions.

(iii) [Reserved]

(iv) All tests required by this subpart on emission-data vehicles shall be conducted at a mileage equal to or greater than the mileage the manufacturer determines under paragraph (b)(4) of this section.

(c)(1) Paragraph (c) of this section applies to heavy-duty engines.

(2) There are two types of service accumulation applicable to heavy-duty engines:

(i) Service accumulation on engines, subsystems, or components selected by the manufacturer under § 86.092–24(c)(3)(i). The manufacturer determines the form and extent of this service accumulation, consistent with good engineering practice, and describes it in the application for certification.

(ii) Dynamometer service accumulation on emission-data engines selected under § 86.092–24 (b)(2) or (b)(3). The manufacturer determines the engine operating schedule to be used for dynamometer service accumulation, consistent with good engineering practice. A single engine operating schedule shall be used for all engines in an engine family-control system combination. Operating schedules may be different for different combinations.

(3) Exhaust emission deterioration factors will be determined on the basis of the service accumulation described in paragraph (b)(2)(i) of this section and related testing, according to the manufacturer's procedures.

(4) The manufacturer shall determine, for each engine family, the number of hours at which the engine system combination is stabilized (no less than 62 hours for catalyst equipped) for emission-data testing. The manufacturer shall maintain, and provide to the Administrator if requested a record of the rationale used in making this determination. The manufacturer may elect to accumulate 125 hours on each test engine within an engine family without making a determination. Any engine used to represent emission-data engine selections under § 86.092–24(b)(2) shall be equipped with an engine system combination that has accumulated at least the number of hours determined under this paragraph. Complete exhaust emission tests shall be conducted for each emission-data engine selection under § 86.092–24(b)(2). Evaporative emission controls need not be connected provided normal operating conditions are maintained in the engine induction system. The Administrator may determine under § 86.092–24(f) that no testing is required.

(d)(1) Paragraph (d) of this section applies to both light-duty trucks and heavy-duty engines.

(2)(i) The results of all emission testing shall be supplied to the Administrator. The manufacturer shall furnish to the Administrator explanation for voiding any test. The Administrator will determine if voiding the test was appropriate based upon the explanation given by the manufacturer for the voided test. Tests between test points may be conducted as required by the Administrator. Data from all tests (including voided tests) may be submitted weekly to the Administrator, but shall be air posted or delivered to the Administrator within 7 days after completion of the test. In addition, all test data shall be compiled and provided to the Administrator in accordance with § 86.092–23. Where the Administrator conducts a test on a durability-data vehicle at a prescribed test point, the results of that test will be used in the calculation of the deterioration factor.

(ii) The results of all emission tests shall be recorded and reported to the Administrator. These test results shall be rounded, in accordance with ASTM E 29–67, to the number of decimal places contained in the applicable emission standard expressed to one additional significant figure.

(3) Whenever a manufacturer intends to operate and test a vehicle (or engine) which may be used for emission data, the manufacturer shall retain in its records all information concerning all emissions tests and maintenance, including vehicle (or engine) alterations to represent other vehicle (or engine) selections. This information shall be submitted, including the vehicle (or engine) description and specification information required by the Administrator, to the Administrator following the emission-data test.

(4)–(5) [Reserved]

(6) Emission testing of any type with respect to any certification vehicle or engine other than that specified in this subpart is not allowed except as such testing may be specifically authorized by the Administrator.

[55 FR 7194, Feb. 28, 1990]

§86.092–35 Labeling.

(a) The manufacturer of any motor vehicle (or motor vehicle engine) subject to the applicable emission standards (and family emission limits, as appropriate) of this subpart, shall, at the time of manufacture, affix a permanent legible label, of the type and in the manner described below, containing the information hereinafter provided, to all production models of such vehicles (or engines) available for sale to the public and covered by a certificate of conformity under §86.091–30(a).

(1) *Light-duty vehicles.* (i) A permanent, legible label shall be affixed in a readily visible position in the engine compartment.

(ii) The label shall be affixed by the vehicle manufacturer who has been issued the certificate of conformity for such vehicle, in such manner that it cannot be removed without destroying or defacing the label. The label shall not be affixed to any equipment which is easily detached from such vehicle.

(iii) The label shall contain the following information lettered in the English language in block letters and numerals, which shall be of a color that contrasts with the background of the label:

(A) The label heading: Vehicle Emission Control Information;

(B) Full corporate name and trademark of manufacturer;

(C) Engine displacement (in cubic inches or liters), engine family identification and evaporative family identification;

(D) Engine tune-up specifications and adjustments, as recommended by the manufacutrer in accordance with the applicable emission standards (or family emission limits, as applicable), including but not limited to idle speeds(s), ignition timing, the idle air-fuel mixture setting procedure and value (e.g., idle CO, idle air-fuel ratio, idle speed drop), high idle speed, initial injection timing and valve lash (as applicable), as well as other parameters deemed necessary by the manufacturer. These specifications should indicate the proper transmission position during tuneup and what accessories (e.g., air conditioner), if any, should be in operation;

(E) An unconditional statement of compliance with the appropriate model year U.S. Environmental Protection Agency regulations which apply to light-duty vehicles;

(F) For vehicles which are part of the diesel particulate averaging program, the family particulate emission limit to which the vehicle is certified;

(G) For vehicles that have been exempted from compliance with the emission standards at high altitude, as specified in §86.090–8(h):

(*1*) A highlighted statement (e.g., underscored or boldface letters) that the vehicle is certified to applicable emission standards at low altitude only;

(*2*) A statement that the vehicle's unsatisfactory performance under high-altitude conditions makes it unsuitable for principal use at high altitude, and

(*3*) A statement that the emission performance warranty provisions of 40 CFR part 85, subpart V do not apply when the vehicle is tested at high altitude; and

(H) For vehicles that have been exempted from compliance with the emission standards at low altitude, as specified in §86.090–8(i):

(*1*) A highlighted statement (e.g., underscore or boldface letters) that the vehicle is certified to applicable emission standards at high altitude only; and

(*2*) A statement that the emission performance warranty provisions of 40 CFR part 85, subpart V do not apply when the vehicle is tested at low altitude.

(I) The vacuum hose routing diagram applicable to the vehicles if the vehicles are equipped with vacuum actuated emission and emission-related components. The manufacturer may, at its option, use a separate label for the vacuum hose routing diagram provided that the vacuum hose diagram is placed in a visible and accessible position as provided in this section.

(J) Vehicles granted final admission under § 85.1505 must comply with the labeling requirements contained in § 85.1510.

(2) *Light-duty truck and heavy-duty vehicles optionally certified in accordance with the light-duty truck provisions.* (i) A legible, permanent label shall be affixed in a readily visible position in the engine compartment.

(ii) The label shall be affixed by the vehicle manufacturer who has been issued the certificate of conformity for such vehicle, in such a manner that it cannot be removed without destroying or defacing the label. The label shall not be affixed to any equipment which is easily detached from such vehicle.

(iii) The label shall contain the following information lettered in the English language in block letters and numerals, which shall be of a color that contrasts with the background of the label.

(A) The label heading: Important Vehicle Information;

(B) Full corporate name and trademark of manufacturer;

(C) Engine displacement (in cubic inches or liters) and engine family identification;

(D) Engine tune-up specifications and adjustments, as recommended by the manufacturer in accordance with the applicable emission standards (or family emission limits, as appropriate), including but not limited to idle speed(s), ignition timing, the idle air-fuel mixture setting procedure and value (e.g., idle CO, idle air-fuel ratio, idle speed drop), high idle speed, initial injection timing, and valve lash (as applicable), as well as other parameters deemed necessary by the manufacturer. These specifications should indicate the proper transmission position during tuneup and what accessories (e.g., air conditioner), if any, should be in operation. If adjustments or modifications to the vehicle are necessary to insure compliance with emission standards (or family emission limits, as appropriate) at either high or low altitude, the manufacturer shall either include the instructions for such adjustments on the label, or indicate on the label where instructions for such adjustments may be found. The label shall indicate whether the engine tune-up or adjustment specifications are applicable to high altitude, low altitude, or both;

(E)(*1*) *Light-duty trucks.* One of the prominent statements, as applicable:

(*i*) Labels for light-duty trucks certified to the oxides of nitrogen standard of 1.12 grams per vehicle mile shall include the following statement: ''This vehicle conforms to U.S. EPA regulations applicable to 19___ Model Year New Light-Duty Trucks.''

(*ii*) Labels for light-duty trucks certified to the oxides of nitrogen standard of 1.7 grams per vehicle mile shall include the following statement: ''This vehicle conforms to U.S. EPA regulations applicable to 19___ Model Year New Light-Duty Trucks with a curb weight greater than 3,450 pounds.''

(*2*) *Heavy-duty vehicles optionally certified in accordance with the light-duty truck provisions.* ''This heavy-duty vehicle conforms to the U.S. EPA regulations applicable to 19___ Model Year Light-Duty Trucks under the special provision of 40 CFR 86.092–1(b).''

(F) If the manufacturer is provided an alternate useful life period under the provisions of § 86.091–21(f), the prominent statement: ''This vehicle has been certified to meet U.S. EPA standards for a useful-life period of _____ years or _____ miles of operation, whichever occurs first. This vehicle's actual life may vary depending on its service application.'' The manufacturer may alter this statement only to express the assigned alternate useful life in terms other than years or miles (e.g., hours, or miles only).

(G) A statement, if applicable, that the adjustments or modifications indicated on the lable are necessary to ensure emission control compliance at the altitude specified.

(H) A statement, if applicable, that the high-altitude vehicle was designated or modified for principal use at high altitude. This statement must be affixed by the manufacturer at the time of assembly or by any dealer who performs the high-altitude modification or adjustment prior to sale to an ultimate purchaser.

(I) For vehicles that have been exempted from compliance with the high-altitude emission standards, as specified in § 86.091–9(g)(2).

(*1*) A highlighted statement (e.g., underscored or boldface letters) that the vehicle is certified to applicable emission standards at low altitude only.

(*2*) A statement that the vehicle's unsatisfactory performance under high-altitude conditions makes it unsuitable for principal use at high altitude, and

(*3*) A statement that the emission performance warranty provisions of 40 CFR part 85, subpart V do not apply when the vehicle is tested at high altitude:

(J) For vehicles which are included in the diesel particulate averaging program, the family particulate emission limit to which the vehicle is certified.

(K) For vehicles which are included in the light-duty truck NO_X averaging program, the family NO_X emissions limit to which the vehicle is certified.

(L) The vacuum hose routing diagram applicable to the vehicles if the vehicles are equipped with vacuum actuated emission and emission-related components. The manufacturer may, at its option, use a separate label for the vacuum hose routing diagram provided that the vacuum hose diagram is placed in a visible and accessible position as provided by this section.

(M) Vehicles granted final admission under § 85.1505 must comply with the labeling requirements contained in § 85.1510.

(3) *Heavy-duty engines.* (i) A permanent legible label shall be affixed to the engine in a position in which it will be readily visible after installation in the vehicle.

(ii) The label shall be attached to an engine part necessary for normal engine operation and not normally requiring replacement during engine life.

(iii) The label shall contain the following information lettered in the English language in block letters and numerals which shall be of a color that contrasts with the background of the label:

(A) The label heading: Important Engine Information.

(B) Full corporate name and trademark of manufacturer;

(C) Engine displacement (in cubic inches or liters) and engine family and model designations;

(D) Date of engine manufacture (month and year). The manufacturer may, in lieu of including the date of manufacture on the engine label, maintain a record of the engine manufacture dates. The manufacturer shall provide the date of manufacture records to the Administrator upon request.

(E) Engine specifications and adjustments as recommended by the manufacturer. These specifications should indicate the proper transmission position during tune-up and what accessories (e.g., air conditioner), if any, should be in operation;

(F) For Otto-cycle engines the label should include the idle speed, ignition timing, and the idle air-fuel mixture setting procedure and value (e.g., idle CO, idle air-fuel ratio, idle speed drop), and valve lash;

(G) For diesel engines the label should include the advertised hp at rpm, fuel rate at advertised hp in mm^3/stroke, valve lash, initial injection timing, and idle speed;

(H) The prominent statement: ''This engine conforms to U.S. EPA regulations applicable to 19___ Model Year New Heavy-Duty Engines.''

(I) If the manufacturer is provided with an alternate useful life period under the provisions of § 86.901–21(f), the prominent statement: ''This engine has been certified to meet U.S. EPA standards for a useful-life period of _____ miles or _____ hours of operation, whichever occurs first. This engine's actual life may vary depending on its service application.'' The manufacturer may alter this statement only to express the assigned alternate useful life in terms other than miles or hours (e.g., years, or hours only).

(J) *For diesel engines.* The prominent statement: ''This engine has a primary intended service application as a _____ heavy-duty engine.'' (The primary intended service applications are light, medium, and heavy, as defined in § 86.902–2.)

(K) *For Otto-cycle engines.* One of the following statements, as applicable:

(*1*) For engines certified to the emission standards under § 86.091–10 (a)(1) (i) or (iii), the statement: ''This engine is certified for use in all heavy-duty vehicles.''

(*2*) for gasoline-fueled engines certified under the provisions of § 86.091–10(a)(3)(i), the statement: ''This engine

is certified for use in all heavy-duty vehicles under the special provision of 40 CFR § 86.091–10(a)(3)(i).''

(*3*) For engines certified to the emission standards under § 86.091–10 (a)(1)(ii) or (iv), the statement: ''This engine is certified for use only in heavy-duty vehicles with a gross vehicle weight rating above 14,000 lbs.''

(L) For all heavy-duty engines which are included in diesel heavy-duty particulate trading, banking or averaging programs, the particulate family emission limit to which the engine is certified.

(M) For all heavy-duty engines which are included in NO_X trading, banking or averaging programs, the NO_X family emission limit to which the engine is certified.

(N) Engines granted final admission under § 85.1505 must comply with the labeling requirements contained in § 85.1510.

(iv) The label may be made up of one or more pieces: *Provided,* That all pieces are permanently attached to the same engine or vehicle part as applicable.

(4)(i) *Gasoline-fueled and methanol-fueled heavy-duty vehicles.* A permanent, legible label shall be affixed in a readily visible position in the engine compartment. If such vehicles do not have an engine compartment, the label required in paragraphs (a)(4) and (g)(1) of this section shall be affixed in a readily visible position on the operator's enclosure or on the engine.

(ii) The label shall be affixed by the vehicle manufacturer who has been issued the certificate of conformity for such vehicle, in such a manner that it cannot be removed without destroying or defacing the label. The label shall not be affixed to any equipment which is easily detached from such vehicle.

(iii) The label shall contain the following information lettered in the English language in block letters and numerals, which shall be of a color that contrasts with the background of the label:

(A) The label heading: Vehicle Emission Control Information;

(B) Full corporate name and trademark of manufacturer;

(C) Evaporative family identification;

(D) The maximum nominal fuel tank capacity (in gallons) for which the evaporative control system is certified; and,

(E) One of the following, as appropriate:

(*1*) An unconditional statement of compliance with the appropriate model year U.S. Environmental Protection Agency regulations which apply to gasoline-fueled heavy-duty vehicles.

(*2*) An unconditional statement of compliance with the appropriate model year U.S. Environmental Protection Agency regulations which apply to methanol-fueled heavy-duty vehicles.

(F) Vehicles granted final admission under § 85.1505 must comply with the labeling requirements contained in § 85.1510.

(b) The provisions of this section shall not prevent a manufacturer from also reciting on the label that such vehicle (or engine) conforms to any applicable state emission standards for new motor vehicles (or new motor vehicle engines) or any other information that such manufacturer deems necessary for, or useful to, the proper operation and satisfactory maintenance of the vehicle (or engine).

(c)(1) The manufacturer of any light-duty vehicle or light-duty truck subject to the emission standards (or family emission limits, as appropriate) of this subpart shall, in addition and subsequent to setting forth those statements on the label required by the Department of Transportation (DOT) pursuant to 49 CFR 567.4, set forth on the DOT label or an additional label located in proximity to the DOT label and affixed as described in 40 CFR 567.4(b), the following information in the English language, lettered in block letters and numerals not less than three thirty-seconds of an inch high, of a color that contrasts with the background of the label:

(i) The heading: ''Vehicle Emission Control Information.''

(ii)(A) *For light-duty vehicles,* The statement: ''This Vehicle Conforms to U.S. EPA Regulations Applicable to 19____ Model Year New Motor Vehicles.''

(B) *For light-duty trucks,* (*1*) The statement: ''This vehicle conforms to U.S. EPA regulations applicable to

19___ Model Year New Light-Duty Trucks.''

(*2*) If the manufacturer is provided an alternate useful life period under the provisions of § 86.091–21(f), the prominent statement: ''This vehicle has been certified to meet U.S. EPA standards for a useful-life period of ___ years or ___ miles of operation, whichever occurs first. This vehicle's actual life may vary depending on its service application.'' The manufacturer may alter this statement only to express the assigned alternate useful life in terms other than years or miles (e.g., hours, or miles only)

(iii) One of the following statements, as applicable, in letters and numerals not less than six thirty-seconds of an inch high and of a color that contrasts with the background of the label:

(A) For all vehicles certified as non-catalyst-equipped: ''NON-CATALYST''

(B) For all vehicles certified as catalyst-equipped which are included in a manufacturer's catalyst control program for which approval has been given by the Administrator: ''CATALYST—APPROVED FOR IMPORT''

(C) For all vehicles certified as catalyst-equipped which are not included in a manufacturer's catalyst control program for which prior approval has been given by the Administrator: ''CATALYST''

(2) In lieu of selecting either of the labeling options of paragraph (c)(1) of this section, the manufacturer may add the information required by paragraph (c)(1)(iii) of this section to the label required by paragraph (a) of this section. The required information will be set forth in the manner prescribed by paragraph (c)(1)(iii) of this section.

(d) Incomplete light-duty trucks or incomplete heavy-duty vehicles optionally certified in accordance with the light-duty truck provisions shall have one of the following prominent statements, as applicable, printed on the label required by paragraph (a)(2) of this section in lieu of the statement required by paragraph (a)(2)(iii)(E) of this section.

(1) *Light-duty trucks.* (i) Labels for light-duty trucks certified to the oxides of nitrogen standard of 1.2 grams per vehicle mile shall include the following statement: ''This vehicle conforms to U.S. EPA regulations applicable to 19___ Model Year New Light-Duty Trucks when it does not exceed ___ pounds in curb weight, ___ pounds in gross vehicle weight rating, and ___ square feet in frontal area.''

(ii) Labels for light-duty trucks certified to the oxides of nitrogen standards of 1.7 grams per vehicle mile shall include the following statement: ''This vehicle conforms to U.S. EPA regulations applicable to 19___ Model Year New Light-Duty Trucks when it is between 3,450 pounds and _____ pounds in curb weight and it does not exceed _____ pounds in gross vehicle weight rating nor _____ square feet in frontal area.''

(2) *Heavy-duty vehicles optionally certified in accordance with the light-duty truck provisions.* ''This heavy-duty vehicle conforms to the U.S. EPA regulations applicable to 19___ Model Year Light-Duty Trucks under the special provision of 40 CFR 86.085–1(b) when it does not exceed _____ pounds in curb weight, _____ pounds in gross vehicle weight rating, and _____ square feet in frontal area.''

(e) Incomplete heavy-duty vehicles having a gross vehicle weight rating of 8,500 pounds or less shall have one of the following statements printed on the label required by paragraph (a)(3) of this section in lieu of the statement required by paragraph (a)(3)(iii)(H) of this section: ''This engine conforms to U.S. EPA regulations applicable to 19___ Model Year Heavy-Duty Engines when installed in a vehicle completed at a curb weight of more than 6,000 pounds or with a frontal area of greater than 45 square feet.''

(f) The manufacturer of any incomplete light-duty vehicle or light-duty truck shall notify the purchaser of such vehicle of any curb weight, frontal area, or gross vehicle weight rating limitations affecting the emission certificate applicable to that vehicle. This notification shall be transmitted in a manner consistent with National Highway Traffic Safety Administration safety notification requirements published in 49 CFR part 568.

(g)(1)(i) Incomplete gasoline-fueled heavy-duty vehicles shall have the following prominent statement printed on the label required in paragraph (a)(4) of

this section: ''(Manufacturer's corporate name) has determined that this vehicle conforms to U.S. EPA regulations applicable to 19___ Model Year New Gasoline-Fueled Heavy-Duty Vehicles when completed with a nominal fuel tank capacity not to exceed _____ gallons. Persons wishing to add fuel tank capacity beyond the above maximum must submit a written statement to the Administrator that the hydrocarbon storage system has been upgraded according to the requirements of 40 CFR 86.092–35(g)(2).''

(ii) Incomplete methanol-fueled heavy-duty vehicles shall have the following prominent statement printed on the label required in paragraph (a)(4) of this section: ''(Manufacturer's corporate name) has determined that this vehicle conforms to U.S. EPA regulations applicable to 19___ Model Year New Methanol-Fueled Heavy-Duty Vehicles when completed with a nominal fuel tank capacity not to exceed _____ gallons. Persons wishing to add fuel tank capacity beyond the above maximum must submit a written statement to the Administrator that the hydrocarbon storage system has been upgraded according to the requirements of 40 CFR 86.091–35(g)(2).''

(2) Persons wishing to add fuel tank capacity beyond the maximum specified on the label required in paragraph (g)(1) of this section shall:

(i) Increase the amount of fuel tank vapor storage material according to the following function:

$$\mathrm{Cap_f} = \mathrm{Cap_i}\left(\frac{\text{T. Vol.}}{\text{Max. Vol.}}\right)$$

Where:

$\mathrm{Cap_f}$ = final amount of fuel tank vapor storage material, grams.

$\mathrm{Cap_i}$ = initial amount of fuel tank vapor storage material, grams.

T. Vol. = total fuel tank volume of completed vehicle, gallons.

Max. Vol. = maximum fuel tank volume as specified on the label required in paragraph (g)(1) of this section, gallons.

(ii) Use, if applicable, hosing for fuel vapor routing which is at least as impermeable to hydrocarbon vapors as that used by the primary manufacturer.

(iii) Use vapor storage material with the same absorptive characteristics as that used by the primary manufacturer.

(iv) Connect, if applicable, any new hydrocarbon storage device to the existing hydrocarbon storage device in series such that the original hydrocarbon storage device is situated between the fuel tank and the new hydrocarbon storage device. The original hydrocarbon storage device shall be sealed such that vapors cannot reach the atmosphere. The elevation of the original hydrocarbon storage device shall be equal to or lower than the new hydrocarbon storage device.

(v) Submit a written statement to the Administrator that paragraphs (g)(2)(i) through (g)(2)(iv) of this section have been complied with.

(3) If applicable, the Administrator will send a return letter verifying the receipt of the written statement required in paragraph (g)(2)(v) of this section.

(h)(1) Light-duty trucks and heavy-duty vehicles and engines for which nonconformance penalties are to be paid in accordance with § 86.1113–87(b) shall have the following information printed on the label required in paragraph (a) of this section. The manufacturer shall begin labeling production engines or vehicles within 10 days after the completion of the PCA.

(i) The statement: ''The manufacturer of this engine/vehicle will pay a nonconformance penalty to be allowed to introduce it into commerce at an emission level higher than the applicable emission standard. The compliance level (or new emission standard) for this engine/vehicle is _____.'' (The manufacturer shall insert the applicable pollutant and compliance level calculated in accordance with § 86.1112–87(a).)

(2) If a manufacturer introduces an engine or vehicle into commerce prior to the compliance level determination of § 86.1112–87(a), it shall provide the engine or vehicle owner with a label as described above to be affixed in a location in proximity to the label required in paragraph (a) of this section within 30 days of the completion of the PCA.

[55 FR 7197, Feb. 28, 1990, as amended at 55 FR 30627, July 26, 1990]

§86.093–2 Definitions.

The definitions of §86.092–2 continue to apply. The definitions listed in this section apply beginning with the 1993 model year.

Bus means a heavy heavy-duty diesel-powered passenger-carrying vehicle with a load capacity of fifteen or more passengers that is centrally fueled, and all urban buses. This definition only applies in the context of §§86.093–11 and 86.093–35.

Centrally fueled bus means a bus that is refueled at least 75 percent of the time at one refueling facility that is owned, operated, or controlled by the bus operator.

Urban bus means a passenger-carrying vehicle powered by a heavy heavy-duty diesel engine, or of a type normally powered by a heavy heavy-duty diesel engine, with a load capacity of fifteen or more passengers and intended primarily for intracity operation, *i.e.*, within the confines of a city or greater metropolitan area. Urban bus operation is characterized by short rides and frequent stops. To facilitate this type of operation, more than one set of quick-operating entrance and exit doors would normally be installed. Since fares are usually paid in cash or tokens, rather than purchased in advance in the form of tickets, urban buses would normally have equipment installed for collection of fares. Urban buses are also typically characterized by the absence of equipment and facilities for long distance travel, *e.g.*, rest rooms, large luggage compartments, and facilities for stowing carry-on luggage. The useful life for urban buses is the same as the useful life for other heavy heavy-duty diesel engines.

[58 FR 15795, Mar. 24, 1993]

§86.093–11 Emission standards for 1993 and later model year diesel heavy-duty engines.

(a)(1) Exhaust emissions from new 1993 and later model year diesel heavy-duty engines shall not exceed the following:

(i)(A) *Hydrocarbons (for petroleum-fueled diesel engines).* 1.3 grams per brake horsepower-hour (0.48 gram per megajoule), as measured under transient operating conditions.

(B) *Total Hydrocarbon Equivalent (for methanol-fueled diesel engines).* 1.3 grams per brake horsepower-hour (0.48 gram per megajoule), as measured under transient operating conditions.

(ii) *Carbon monoxide.* (A) 15.5 grams per brake horsepower-hour (5.77 grams per megajoule), as measured under transient operating conditions.

(B) 0.50 percent of exhaust gas flow at curb idle (methanol-fueled diesel only).

(iii) *Oxides of nitrogen.* (A) 5.0 grams per brake horsepower-hour (1.9 grams per megajoule), as measured under transient operating conditions.

(B) A manufacturer may elect to include any or all of its diesel heavy-duty engine families in any or all of the NO_X averaging, trading, or banking programs for heavy-duty engines, within the restrictions described in §86.091–15. If the manufacturer elects to include engine families in any of the programs, the NO_X FELs may not exceed 6.0 grams per brake horsepower-hour (2.2 grams per megajoule). This ceiling value applies whether credits for the family are derived from averaging, trading or banking programs.

(iv) *Particulate.* (A) For diesel engines to be used in buses, 0.10 grams per brake horsepower-hour (0.037 gram per megajoule), as measured under transient operating conditions.

(B) For all other diesel engines only, 0.25 grams per brake horsepower-hour (0.093 gram per megajoule), as measured under transient operating conditions.

(C) A manufacturer may elect to include any or all of its diesel heavy-duty engine families in any or all of the particulate averaging, trading, or banking programs for heavy-duty engines, within the restrictions described in §86.094.15. If the manufacturer elects to include engine families in any of these programs, the particulate FEL may not exceed:

(*1*) 0.25 gram per brake horsepower-hour (0.093 gram per megajoule) for diesel engines intended for use in urban buses.

(*2*) 0.60 gram per brake horsepower-hour (0.22 gram per megajoule) for diesel engines *not* intended for use in urban buses.

(*3*) The ceiling values in paragraphs (a)(1)(iv)(C) (*1*) and (*2*) of this section

apply whether credits for the family are derived from averaging, trading or banking programs.

(2) The standards set forth in paragraph (a)(1) of this section refer to the exhaust emitted over operating schedules as set forth in paragraph (f)(2) of appendix I of this part, and measured and calculated in accordance with the procedures set forth in subpart N of this part, except as noted in § 86.091–23(c)(2) (i) and (ii).

(b)(1) The opacity of smoke emission from new 1993 and later model year diesel heavy-duty engines shall not exceed:

(i) 20 percent during the engine acceleration mode.

(ii) 15 percent during the engine lugging mode.

(iii) 50 percent during the peaks in either mode.

(2) The standards set forth in paragraph (b)(1) of this section refer to exhaust smoke emissions generated under the conditions set forth in subpart I of this part and measured and calculated in accordance with those procedures.

(3) *Evaporative emissions* (total of non-oxygenated hydrocarbons plus methanol) for 1993 and later model year heavy-duty vehicles equipped with methanol-fueled diesel engines shall not exceed:

(i) For vehicles with Gross Vehicle Weight Rating of up to 14,000 lbs., 3.0 grams per test.

(ii) For vehicles with a Gross Vehicle Weight Rating of greater than 14,000 lbs., 4.0 grams per test.

(4)(i) For vehicles with a Gross Vehicle Weight Rating of up to 26,000 lbs., the standards set forth in paragraph (b)(3) of this section refer to a composite sample of evaporative emission collected under the conditions set forth in subpart M of this part and measured in accordance with those procedures.

(ii) For vehicles with a Gross Vehicle Weight Rating of greater than 26,000 lbs., the standard set forth in paragraph (b)(3)(ii) of this section refers to the manufacturers' engineering design evaluation using good engineering practice (a statement of which is required in § 86.091–23(b)(4)(ii)).

(c) No crankcase emissions shall be discharged into the ambient atmosphere from any new 1993 or later model year methanol-fueled diesel, or any naturally-aspirated diesel heavy-duty engine. For petroleum fueled engines only, this provision does not apply to engines using turbocharters, pumps, blowers or superchargers for air induction.

(d) Every manufacturer of new motor vehicle engines subject to the standard prescribed in this section shall, prior to taking any of the actions specified in section 203(a)(1) of the Act, test or cause to be tested motor vehicle engines in accordance with applicable procedures in subpart I or N of this part to ascertain that such test engines meet the requirements of paragraphs (a), (b), and (c) and (d) of this section.

[56 FR 64711, Dec. 12, 1991, as amended at 58 FR 15795, Mar. 24, 1993]

§ 86.093–35 Labeling.

(a) The manufacturer of any motor vehicle (or motor vehicle engine) subject to the applicable emission standards (and family emission limits, as appropriate) of this subpart, shall, at the time of manufacture, affix a permanent legible label, of the type and in the manner described in this section, containing the information hereinafter provided, to all production models of such vehicles (or engines) available for sale to the public and covered by a certificate of conformity under § 86.091–30(a). Where blanks appear in this section, manufacturers are required to fill in the appropriate information in the blanks.

(1) *Light-duty vehicles.* (i) A permanent, legible label shall be affixed in a readily visible position in the engine compartment.

(ii) The label shall be affixed by the vehicle manufacturer who has been issued the certificate of conformity for such vehicle, in such manner that it cannot be removed without destroying or defacing the label. The label shall not be affixed to any equipment which is easily detached from such vehicle.

(iii) The label shall contain the following information lettered in the English language in block letters and numerals, which shall be of a color that contrasts with the background of the label:

(A) The label heading: Vehicle Emission Control Information;

(B) Full corporate name and trademark of manufacturer;

(C) Engine displacement (in cubic inches or liters), engine family identification and evaporative family identification;

(D) Engine tune-up specifications and adjustments, as recommended by the manufacturer in accordance with the applicable emission standards (or family emission limits, as applicable), including but not limited to idle speed(s), ignition timing, the idle air-fuel mixture setting procedures and value (e.g., idle CO, idle air-fuel ratio, idle speed drop), high idle speed, initial injection timing and valve lash (as applicable), as well as other parameters deemed necessary by the manufacturer. These specifications should indicate the proper transmission position during tuneup and what accessories (e.g., air conditioner), if any, should be in operation;

(E) An unconditional statement of compliance with the appropriate model year U.S. Environmental Protection Agency regulations which apply to light-duty vehicles;

(F) For vehicles which are part of the diesel particulate averaging program, the family particulate emission limit to which the vehicle is certified;

(G) For vehicles that have been exempted from compliance with the emission standards at high altitude, as specified in § 86.090–8(h):

(*1*) A highlighted statement (e.g., underscored or boldface letters) that the vehicle is certified to applicable emission standards at low altitude only;

(*2*) A statement that the vehicle's unsatisfactory performance under high-altitude conditions makes it unsuitable for principal use at high altitude; and

(*3*) A statement that the emission performance warranty provisions of 40 CFR part 85, subpart V do not apply when the vehicle is tested at high altitude;

(H) For vehicles that have been exempted from compliance with the emission standards at low altitude, as specified in § 86.090–8(i):

(*1*) A highlighted statement (e.g., underscored or boldface letters) that the vehicle is certified to applicable emission standards at high altitude only; and

(*2*) A statement that the emission performance warranty provisions of 40 CFR part 85, subpart V do not apply when the vehicle is tested at low altitude;

(I) The vacuum hose routing diagram applicable to the vehicles if the vehicles are equipped with vacuum actuated emission and emission-related components. The manufacturer may, at its option, use a separate label for the vacuum hose routing diagram provided that the vacuum hose diagram is placed in a visible and accessible position as provided in this section; and

(J) Vehicles granted final admission under § 85.1505 must comply with the labeling requirements contained in § 85.1510.

(2) *Light-duty truck and heavy-duty vehicles optionally certified in accordance with the light-duty truck provisions.* (i) A legible, permanent label shall be affixed in a readily visible position in the engine compartment.

(ii) The label shall be affixed by the vehicle manufacturer who has been issued the certificate of conformity for such vehicle, in such a manner that it cannot be removed without destroying or defacing the label. The label shall not be affixed to any equipment which is easily detached from such vehicle.

(iii) The label shall contain the following information lettered in the English language in block letters and numerals, which shall be of a color that contrasts with the background of the label.

(A) The label heading: Important Vehicle Information;

(B) Full corporate name and trademark of manufacturer;

(C) Engine displacement (in cubic inches or liters) and engine family identification;

(D) Engine tune-up specifications and adjustments, as recommended by the manufacturer in accordance with the applicable emission standards (or family emission limits, as appropriate), including but not limited to idle speed(s), ignition timing, the idle air-fuel mixture setting procedure and value (e.g., idle CO, idle air-fuel ratio, idle speed drop), high idle speed, initial injection timing, and valve lash (as applicable),

as well as other parameters deemed necessary by the manufacturer. These specifications should indicate the proper transmission position during tuneup and what accessories (e.g., air conditioner), if any, should be in operation. If adjustments or modifications to the vehicle are necessary to insure compliance with emission standards (or family emission limits, as appropriate) at either high or low altitude, the manufacturer shall either include the instructions for such adjustments on the label, or indicate on the label where instructions for such adjustments may be found. The label shall indicate whether the engine tune-up or adjustment specifications are applicable to high altitude, low altitude, or both;

(E)(*1*) *Light-duty trucks.* One of the prominent statements, as applicable:

(*i*) Labels for light-duty trucks certified to the oxides of nitrogen standard of 1.12 grams per vehicle mile shall include the following statement: ''This vehicle conforms to U.S. EPA regulations applicable to 19___ Model Year New Light-Duty Trucks.''

(*ii*) Labels for light-duty trucks certified to the oxides of nitrogen standard of 1.7 grams per vehicle mile shall include the following statement: ''This vehicle conforms to U.S. EPA regulations applicable to 19___ Model Year New Light-Duty Trucks with a curb weight greater than 3,450 pounds.''

(*2*) Heavy-duty vehicles optionally certified in accordance with the light-duty truck provisions. ''This heavy-duty vehicle conforms to U.S. EPA regulations applicable to 19___ Model Year New Light-Duty Trucks under the special provision of 40 CFR 86.092–1(b).'';

(F) If the manufacturer is provided an alternate useful life period under the provisions of § 86.091–21(f), the prominent statement: ''This vehicle has been certified to meet U.S. EPA standards for a useful-life period of ___ years or _____ miles of operation, whichever occurs first. This vehicle's actual life may vary depending on its service application.'' The manufacturer may alter this statement only to express the assigned alternate useful life in terms other than years or miles (e.g., hours, or miles only);

(G) A statement, if applicable, that the adjustments or modifications indicated on the label are necessary to ensure emission control compliance at the altitude specified;

(H) A statement, if applicable, that the high-altitude vehicle was designated or modified for principal use at high altitude. This statement must be affixed by the manufacturer at the time of assembly or by any dealer who performs the high-altitude modification or adjustment prior to sale to an ultimate purchaser;

(I) For vehicles that have been exempted from compliance with the high-altitude emission standards, as specified in § 86.091–9(g)(2).

(*1*) A highlighted statement (e.g., underscored or boldface letters) that the vehicle is certified to applicable emission standards at low altitude only;

(*2*) A statement that the vehicle's unsatisfactory performance under high-altitude conditions makes it unsuitable for principal use at high altitude; and

(*3*) A statement that the emission performance warranty provisions of 40 CFR part 85, subpart V do not apply when the vehicle is tested at high altitude;

(J) For vehicles which are included in the diesel particulate averaging program, the family particulate emission limit to which the vehicle is certified;

(K) For vehicles which are included in the light-duty truck NO_X averaging program, the family NO_X emissions limit to which the vehicle is certified;

(L) The vacuum hose routing diagram applicable to the vehicles if the vehicles are equipped with vacuum actuated emission and emission-related components. The manufacturer may, at its option, use a separate label for the vacuum hose routing diagram provided that the vacuum hose diagram is placed in a visible and accessible position as provided by this section;

(M) Vehicles granted final admission under § 85.1505 of this chapter must comply with the labeling requirements contained in § 85.1510 of this chapter.

(3) *Heavy-duty engines.* (i) A permanent legible label shall be affixed to the engine in a position in which it will be readily visible after installation in the vehicle.

(ii) The label shall be attached to an engine part necessary for normal engine operation and not normally requiring replacement during engine life.

(iii) The label shall contain the following information lettered in the English language in block letters and numerals which shall be of a color that contrasts with the background of the label:

(A) The label heading: Important Engine Information;

(B) Full corporate name and trademark of manufacturer;

(C) Engine displacement (in cubic inches or liters) and engine family and model designations;

(D) Date of engine manufacture (month and year). The manufacturer may, in lieu of including the date of manufacture on the engine label, maintain a record of the engine manufacture dates. The manufacturer shall provide the date of manufacture records to the Administrator upon request;

(E) Engine specifications and adjustments as recommended by the manufacturer. These specifications should indicate the proper transmission position during tune-up and what accessories (e.g., air conditioner), if any, should be in operation;

(F) For Otto-cycle engines the label should include the idle speed, ignition timing, and the idle air-fuel mixture setting procedure and value (e.g., idle CO, idle air-fuel ratio, idle speed drop), and value lash;

(G) For diesel engines the label should include the advertised hp at rpm, fuel rate at advertised hp in mm^3/stroke, valve lash, initial injection timing, and idle speed;

(H) The prominent statement: ''This engine conforms to U.S. EPA regulations applicable to 19— Model Year New Heavy-Duty Engines.'';

(I) If the manufacturer is provided with an alternate useful life period under the provisions of § 86.901–21(f), the prominent statement: ''This engine has been certified to meet U.S. EPA standards for a useful-life period of _____ miles or _____ hours of operation, whichever occurs first. This engine's actual life may vary depending on its service application.'' The manufacturer may alter this statement only to express the assigned alternate useful life in terms other than miles or hours (e.g., years, or hours only);

(J) For diesel engines. The prominent statement: ''This engine has a primary intended service application as a _____ heavy-duty engine.'' (The primary intended service applications are light, medium, and heavy, as defined in § 86.902–2.);

(K) For Otto-cycle engines. One of the following statements, as applicable:

(*1*) For engines certified to the emission standards under § 86.09–-10(a)(1) (i) or (iii), the statement: ''This engine is certified for use in all heavy-duty vehicles.'';

(*2*) For gasoline-fueled engines certified under the provisions of § 86.091–10(a)(3)(i), the statement: ''This engine is certified for use in all heavy-duty vehicles under the special provision of 40 CFR 86.091–10(a)(3)(i).'';

(*3*) For engines certified to the emission standards under § 86.091–10(a)(1) (ii) or (iv), the statement: ''This engine is certified for use only in heavy-duty vehicles with a gross vehicle weight rating above 14,000 lbs.'';

(L) For all heavy-duty engines which are included in diesel heavy-duty particulate trading, banking or averaging programs, the particulate family emission limit to which the engine is certified;

(M) For all heavy-duty engines which are included in NO_X trading, banking or averaging programs, the NO_X family emission limit to which the engine is certified;

(N) Engines granted final admission under § 85.1505 must comply with the labeling requirements contained in § 85.1510; and

(O) For diesel engines which have been certified to comply with the particulate standard of 40 CFR 86.093–11(a)(1)(iv)(A), the statement ''This engine is certified for use in a bus as defined at 40 CFR 86.093–2.'' Unless waived by the Administrator on the basis of impracticality, for diesel engines not certified to comply with the particulate standard 40 CFR 86.093–11(a)(1)(iv)(A), the statement ''This engine is not certified for use in a bus as defined at 40 CFR 86.093–2. Sales of this engine for use in a bus is a violation of Federal law under the Clean Air Act.''

(iv) The label may be made up of one or more pieces: Provided, That all pieces are permanently attached to the same engine or vehicle part as applicable.

(4) *Gasoline-fueled and methanol-fueled heavy-duty vehicles.* (i) A permanent, legible label shall be affixed in a readily visible position in the engine compartment. If such vehicles do not have an engine compartment, the label required in paragraphs (a)(4) and (g)(1) of this section shall be affixed in a readily visible position on the operator's enclosure or on the engine.

(ii) The label shall be affixed by the vehicle manufacturer who has been issued the certificate of conformity for such vehicle, in such a manner that it cannot be removed without destroying or defacing the label. The label shall not be affixed to any equipment which is easily detached from such vehicle.

(iii) The label shall contain the following information lettered in the English language in block letters and numerals, which shall be of a color that contrasts with the background of the label:

(A) The label heading: Vehicle Emission Control Information;

(B) Full corporate name and trademark of manufacturer;

(C) Evaporative family identification;

(D) The maximum nominal fuel tank capacity (in gallons) for which the evaporative control system is certified; and

(E) One of the following, as appropriate:

(*1*) An unconditional statement of compliance with the appropriate model year U.S. Environmental Protection Agency regulations (40 CFR part 86) which apply to gasoline-fueled heavy-duty vehicles;

(*2*) An unconditional statement of compliance with the appropriate model year U.S. Environmental Protection Agency regulations (40 CFR part 86) which apply to methanol-fueled heavy-duty vehicles;

(F) Vehicles granted final admission under § 85.1505 of this chapter must comply with the labeling requirements contained in § 85.1510 of this chapter.

(b) The provisions of this section shall not prevent a manufacturer from also reciting on the label that such vehicle (or engine) conforms to any applicable state emission standards for new motor vehicles (or new motor vehicle engines) or any other information that such manufacturer deems necessary for, or useful to, the proper operation and satisfactory maintenance of the vehicle (or engine).

(c)(1) The manufacturer of any light-duty vehicle or light-duty truck subject to the emission standards (or family emission limits, as appropriate) of this subpart shall, in addition and subsequent to setting forth those statements on the label required by the Department of Transportation (DOT) pursuant to 49 CFR 567.4, set forth on the DOT label or an additional label located in proximity to the DOT label and affixed as described in 40 CFR 567.4(b), the following information in the English language, lettered in block letters and numerals not less than three thirty-seconds of an inch high, of a color that contrasts with the background of the label:

(i) The heading: ''Vehicle Emission Control Information.''

(ii)(A) For light-duty vehicles, The statement: ''This Vehicle Conforms to U.S. EPA Regulations Applicable to 19___ Model Year New Motor Vehicles.''

(B) For light-duty trucks:

(*1*) The statement: ''This vehicle conforms to U.S. EPA regulations applicable to 19___ Model Year New Light-Duty Trucks.''

(*2*) If the manufacturer is provided an alternate useful life period under the provisions of § 86.091–21(f), the prominent statement: ''This vehicle has been certified to meet U.S. EPA standards for a useful-life period of ___ years or _____ miles of operation, whichever occurs first. This vehicle's actual life may vary depending on its service application.'' The manufacturer may alter this statement only to express the assigned alternate useful life in terms other than years or miles (e.g., hours, or miles only).

(iii) One of the following statements, as applicable, in letters and numerals not less than six thirty-seconds of an inch high and of a color that contrasts with the background of the label:

(A) For all vehicles certified as non-catalyst-equipped: ''Non-Catalyst''.

(B) For all vehicles certified as catalyst-equipped which are included in a manufacturer's catalyst control program for which approval has been given by the Administrator: ''Catalyst—Approved for Import''.

(C) For all vehicles certified as catalyst-equipped which are not included in a manufacturer's catalyst control program for which prior approval has been given by the Administrator: ''Catalyst''.

(2) In lieu of selecting either of the labeling options of paragraph (c)(1) of this section, the manufacturer may add the information required by paragraph (c)(1)(iii) of this section to the label required by paragraph (a) of this section. The required information will be set forth in the manner prescribed by paragraph (c)(1)(iii) of this section.

(d) Incomplete light-duty trucks or incomplete heavy-duty vehicles optionally certified in accordance with the light-duty truck provisions shall have one of the following prominent statements, as applicable, printed on the label required by paragraph (a)(2) of this section in lieu of the statement required by paragraph (a)(2)(iii)(E) of this section.

(1) Light-duty trucks. (i) Labels for light-duty trucks certified to the oxides of nitrogen standard of 1.2 grams per vehicle mile shall include the following statement: ''This vehicle conforms to U.S. EPA regulations applicable to 19___ Model Year New Light-Duty Trucks when it does not exceed ___ pounds in curb weight, ___ pounds in gross vehicle weight rating, and ___ square feet in frontal area.''

(ii) Labels for light-duty trucks certified to the oxides of nitrogen standards of 1.7 grams per vehicle mile shall include the following statement: ''This vehicle conforms to U.S. EPA regulations applicable to 19___ Model Year New Light-Duty Trucks when it is between 3,450 pounds and ___ pounds in curb weight and it does not exceed ___ pounds in gross vehicle weight rating nor ___ square feet in frontal area.''

(2) Heavy-duty vehicles optionally certified in accordance with the light-duty truck provisions. ''This heavy-duty vehicle conforms to the U.S. EPA regulations applicable to 19___ Model Year Light-Duty Trucks under the special provision of 40 CFR 86.085–1(b) when it does not exceed ___ pounds in curb weight, ___ pounds in gross vehicle weight rating, and ___ square feet in frontal area.''

(e) Incomplete heavy-duty vehicles having a gross vehicle weight rating of 8,500 pounds or less shall have one of the following statements printed on the label required by paragraph (a)(3) of this section in lieu of the statement required by paragraph (a)(3)(iii)(H) of this section: ''This engine conforms to U.S. EPA regulations applicable to 19___ Model Year Heavy-Duty Engines when installed in a vehicle completed at a curb weight of more than 6,000 pounds or with a frontal area of greater than 45 square feet.''

(f) The manufacturer of any incomplete light-duty vehicle or light-duty truck shall notify the purchaser of such vehicle of any curb weight, frontal area, or gross vehicle weight rating limitations affecting the emission certificate applicable to that vehicle. This notification shall be transmitted in a manner consistent with National Highway Traffic Safety Administration safety notification requirements published in 49 CFR part 568.

(g)(1)(i) Incomplete gasoline-fueled heavy-duty vehicles shall have the following prominent statement printed on the label required in paragraph (a)(4) of this section: ''(Manufacturer's corporate name) has determined that this vehicle conforms to U.S. EPA regulations applicable to 19___ Model Year New Gasoline-Fueled Heavy-Duty Vehicles when completed with a nominal fuel tank capacity not to exceed _____ gallons. Persons wishing to add fuel tank capacity beyond the above maximum must submit a written statement to the Administrator that the hydrocarbon storage system has been upgraded according to the requirements of 40 CFR 86.092–35(g)(2).''

(ii) Incomplete methanol-fueled heavy-duty vehicles shall have the following prominent statement printed on the label required in paragraph (a)(4) of this section: ''(Manufacturer's corporate name) has determined that this vehicle conforms to U.S. EPA regulations applicable to 19___ Model Year

New Methanol-Fueled Heavy-Duty Vehicles when completed with a nominal fuel tank capacity not to exceed _____ gallons. Persons wishing to add fuel tank capacity beyond the above maximum must submit a written statement to the Administrator that the hydrocarbon storage system has been upgraded according to the requirements of 40 CFR 86.091–35(g)(2).''

(2) Persons wishing to add fuel tank capacity beyond the maximum specified on the label required in paragraph (g)(1) of this section shall:

(i) Increase the amount of fuel tank vapor storage material according to the following function:

$$\mathrm{Cap_f} = \mathrm{Cap_i}\left(\frac{\text{T. Vol.}}{\text{Max. Vol.}}\right)$$

Where:

Capf=final amount of fuel tank vapor storage material, grams.

Capi=initial amount of fuel tank vapor storage material, grams.

T. Vol.=total fuel tank volume of completed vehicle, gallons.

Max. Vol.=maximum fuel tank volume as specified on the label required in paragraph (g)(1) of this section, gallons.

(ii) Use, if applicable, hosing for fuel vapor routing which is at least as impermeable to hydrocarbon vapors as that used by the primary manufacturer.

(iii) Use vapor storage material with the same absorptive characteristics as that used by the primary manufacturer.

(iv) Connect, if applicable, any new hydrocarbon storage device to the existing hydrocarbon storage device in series such that the original hydrocarbon storage device is situated between the fuel tank and the new hydrocarbon storage device. The original hydrocarbon storage device shall be sealed such that vapors cannot reach the atmosphere. The elevation of the original hydrocarbon storage device shall be equal to or lower than the new hydrocarbon storage device.

(v) Submit a written statement to the Administrator that paragraphs (g)(2)(i) through (g)(2)(iv) of this section have been complied with.

(3) If applicable, the Administrator will send a return letter verifying the receipt of the written statement required in paragraph (g)(2)(v) of this section.

(h)(1) Light-duty trucks and heavy-duty vehicles and engines for which nonconformance penalties are to be paid in accordance with § 86.1113–87(b) shall have the following information printed on the label required in paragraph (a) of this section. The manufacturer shall begin labeling production engines or vehicles within 10 days after the completion of the PCA.

(i) The statement: ''The manufacturer of this engine/vehicle will pay a nonconformance penalty to be allowed to introduce it into commerce at an emission level higher than the applicable emission standard. The compliance level (or new emission standard) for this engine/vehicle is _____.'' (The manufacturer shall insert the applicable pollutant and compliance level calculated in accordance with § 86.1112–87(a).)

(ii) [Reserved]

(2) If a manufacturer introduces an engine or vehicle into commerce prior to the compliance level determination of § 86.1112–87(a), it shall provide the engine or vehicle owner with a label as described in paragraph (h) of this section to be affixed in a location in proximity to the label required in paragraph (a) of this section within 30 days of the completion of the PCA.

[58 FR 15795, Mar. 24, 1993]

§ 86.094–1 General applicability.

(a) The provisions of this subpart generally apply to 1994 and later model year new Otto-cycle and diesel-cycle light-duty vehicles, 1994 and later model year new Otto-cycle and diesel-cycle light-duty trucks, and 1994 and later model year new Otto-cycle and diesel-cycle heavy-duty engines. In cases where a provision applies only to a certain vehicle group based on its model year, vehicle class, motor fuel, engine type, or other distinguishing characteristics, the limited applicability is cited in the appropriate section or paragraph.

(b) *Optional applicability.* A manufacturer may request to certify any heavy-duty vehicle of 10,000 pounds Gross Vehicle Weight Rating or less in accordance with the light-duty truck

provisions. Heavy-duty engine or vehicle provisions do not apply to such a vehicle.

(c)–(d) [Reserved]

(e) *Small volume manufacturers.* Special certification procedures are available for any manufacturer whose projected combined U.S. sales of light-duty vehicles, light-duty trucks, heavy-duty vehicles, and heavy-duty engines in its product line (including all vehicles and engines imported under the provisions of §§ 85.1505 and 85.1509 of this chapter are fewer than 10,000 units for the model year in which the manufacturer seeks certification. To certify its product line under these optional procedures, the small-volume manufacturer must first obtain the Administrator's approval. The manufacturer must meet the eligibility criteria specified in § 86.092–14(b) before the Administrator's approval will be granted. The small-volume manufacturer's certification procedures are described in § 86.092–14.

(f) *Optional procedures for determining exhaust opacity.* (1) The provisions of subpart I of this part apply to tests which are performed by the Administrator, and optionally, by the manufacturer.

(2) Measurement procedures, other than that described in subpart I of this part, may be used by the manufacturer provided the manufacturer satisfies the requirements of § 86.091–23(f).

(3) When a manufacturer chooses to use an alternative measurement procedure it has the responsibility to determine whether the results obtained by the procedure will correlate with the results which would be obtained from the measurement procedure in subpart I of this part. Consequently, the Administrator will not routinely approve or disapprove any alternative opacity measurement procedure or any associated correlation data which the manufacturer elects to use to satisfy the data requirements for subpart I of this part.

(4) If a confirmatory test(s) is performed and the results indicate there is a systematic problem suggesting that the data generated under an optional alternative measurement procedure do not adequately correlate with data obtained in accordance with the procedures described in subpart I of this part, EPA may require that all certificates of conformity not already issued be based on data obtained from procedures described in subpart I of this part.

[58 FR 4002, Jan. 12, 1993]

§ 86.094–2 Definitions.

The definitions of § 86.093–2 remain effective. The definitions listed in this section are effective beginning with the 1994 model year.

Adjusted Loaded Vehicle Weight means the numerical average of vehicle curb weight and GVWR.

Bi-directional control means the capability of a diagnostic tool to send messages on the data bus that temporarily overrides the module's control over a sensor or actuator and gives control to the diagnostic tool operator. Bi-directional controls do not create permanent changes to engine or component calibrations.

Data stream information means information (i.e., messages and parameters) originated within the vehicle by a module or intelligent sensors (i.e., a sensor that contains and is controlled by its own module) and transmitted between a network of modules and/or intelligent sensors connected in parallel with either one or two communication wires. The information is broadcast over the communication wires for use by other modules (e.g., chassis, transmission, etc.) to conduct normal vehicle operation or for use by diagnostic tools. Data stream information does not include engine calibration related information.

Defeat device means an auxilary emission control device (AECD) that reduces the effectiveness of the emission control system under conditions which may reasonably be expected to be encountered in normal vehicle operation and use, unless:

(1) Such conditions are substantially included in the Federal emission test procedure;

(2) The need for the AECD is justified in terms of protecting the vehicle against damage or accident; or

(3) The AECD does not go beyond the requirements of engine starting.

Durability useful life means the highest useful life mileage out of the set of

all useful life mileages that apply to a given vehicle. The durability useful life determines the duration of service accumulation on a durability data vehicle. The determination of durability useful life shall reflect any alternative useful life mileages approved by the Administrator under § 86.094–21(f). The determination of durability useful life shall exclude any standard and related useful life mileage for which the manufacturer has obtained a waiver of emission data submission requirements under § 86.094–23(c)

Element of design means any control system (i.e., computer software, electronic control system, emission control system, computer logic), and/or control system calibrations, and/or the results of systems interaction, and/or hardware items on a motor vehicle or motor vehicle engine.

Engine warm-up cycle means sufficient vehicle operation such that the coolant temperature has risen by at least 40 °F from engine starting and reaches a minimum temperature of 160 °F.

Enhanced service and repair information means information which is specific for an original equipment manufacturer's brand of tools and equipment.

Equivalent test weight means the weight, within an inertia weight class, which is used in the dynamometer testing of a vehicle and which is based on its loaded vehicle weight or adjusted loaded vehicle weight in accordance with the provisions of subparts A and B of this part.

Gaseous fuel means natural gas or liquefied petroleum gas.

Generic service and repair information means information which is not specific for an original equipment manufacturer's brand of tools and equipment.

Heavy light-duty truck means any light-duty truck rated greater than 6000 lbs GVWR.

Indirect information means any information that is not specifically contained in the service literature, but is contained in items such as tools or equipment provided to franchised dealers (or others).

Intermediary means any individual or entity, other than an original equipment manufacturer, which provides service or equipment to automotive technicians.

Intermediate Temperature Cold Testing means testing done pursuant to the driving cycle and testing conditions contained in 40 CFR part 86, subpart C, at temperatures between 25 °F (−4 °C) and 68 °F (20 °C).

Light-duty truck 1 means any light light-duty truck up through 3750 lbs loaded vehicle weight.

Light-duty truck 2 means any light light-duty truck greater than 3750 lbs loaded vehicle weight.

Light-duty truck 3 means any heavy light-duty truck up through 5750 lbs adjusted loaded vehicle weight.

Light-duty truck 4 means any heavy light-duty truck greater than 5750 lbs adjusted loaded vehicle weight.

Light light-duty truck means any light-duty truck rated up through 6000 lbs GVWR.

Liquefied petroleum gas means a liquid hydrocarbon fuel that is stored under pressure and is composed primarily of species that are gases at atmospheric conditions (temperature = 25 °C and pressure = 1 atm), excluding natural gas.

Multi-fuel means capable of operating on two or more different fuel types, either separately or simultaneously.

Natural gas means a fuel whose primary constituent is methane.

Non-Methane Hydrocarbon Equivalent means the sum of the carbon mass emissions of non-oxygenated non-methane hydrocarbons, methanol, formaldehyde, or other organic compounds that are separately measured, expressed as gasoline-fueled vehicle hydrocarbons. In the case of exhaust emissions, the hydrogen-to-carbon ratio of the equivalent hydrocarbon is 1.85:1. In the case of diurnal and hot soak emissions, the hydrogen-to-carbon ratios of the equivalent hydrocarbons are 2.33:1 and 2.2:1, respectively.

Petroleum fuel means liquid fuels normally derived from crude oil, excluding liquefied petroleum gas. Gasoline and diesel fuel are petroleum fuels.

Test weight basis means the basis on which equivalent test weight is determined in accordance with § 86.129–94 of subpart B of this part.

Useful life means:

(a) For light-duty vehicles, and for model year 1994 and later light light-duty trucks not subject to the Tier 0 standards of paragraph (a) of § 86.094–9, intermediate useful life and/or full useful life. Intermediate useful life is a period of use of 5 years or 50,000 miles, whichever occurs first. Full useful life is a period of use of 10 years or 100,000 miles, whichever occurs first, except as otherwise noted in § 86.094–9.

(b) For light light-duty trucks subject to the Tier 0 standards of paragraph (a) of § 86.094–9, and for heavy light-duty truck engine families, intermediate and/or full useful life. Intermediate useful life is a period of use of 5 years or 50,000 miles, whichever occurs first. Full useful life is a period of use of 11 years or 120,000 miles, whichever occurs first.

(c) For an Otto-cycle heavy-duty engine family, a period of use of 8 years or 110,000 miles, whichever first occurs.

(d) For a diesel heavy-duty engine family:

(1) For light heavy-duty diesel engines, period of use of 8 years or 110,000 miles, whichever first occurs.

(2) For medium heavy-duty diesel engines, a period of use of 8 years or 185,000 miles, whichever first occurs.

(3) For heavy-duty diesel engines, a period of use of 8 years or 290,000 miles, whichever first occurs, except as provided in paragraph (d)(4) of this definition.

(4) for heavy heavy-duty diesel engines used in urban buses, for the particulate standard, a period of use of 10 years or 290,000 miles, whichever first occurs.

(e) As an option for both light-duty trucks under certain conditions and heavy-duty engine families, an alternative useful life period assigned by the Administrator under the provisions of paragraph (f) of § 86.094–21.

(f) The useful-life period for purposes of the emissions defect warranty and emissions performance warranty shall be a period of 5 years/50,000 miles, whichever first occurs, for light-duty trucks, Otto-cycle heavy-duty engines and light heavy-duty diesel engines. For all other heavy-duty diesel engines the aforementioned period is 5 years/100,000 miles, whichever first occurs. However, in no case may this period be less than the manufacturer's basic mechanical warranty period for the engine family.

[56 FR 25739, June 5, 1991, as amended at 57 FR 31897, July 17, 1992; 58 FR 4002, Jan. 12, 1993; 58 FR 9485, Feb. 19, 1993; 58 FR 15799, Mar. 24, 1993; 59 FR 48494, Sept. 21, 1994; 60 FR 34335, June 30, 1995; 60 FR 40496, Aug. 9, 1995]

§ 86.094–3 Abbreviations.

(a) The abbreviations in § 86.090–3 remain effective. The abbreviations in this section apply beginning with the 1994 model year.

(b) The abbreviations in this section apply to this subpart, and also to subparts B, E, F, H, M, N and P of this part, and have the following meanings:

ALVW—Adjusted Loaded Vehicle Weight
LPG—Liquefied Petroleum Gas
NMHC—Nonmethane Hydrocarbons
NMHCE—Non-Methane Hydrocarbon Equivalent
PM—Particulate Matter
THC—Total Hydrocarbons

[56 FR 25740, June 5, 1991, as amended at 58 FR 33208, June 16, 1993; 59 FR 48494, Sept. 21, 1994; 60 FR 34335, June 30, 1995]

§ 86.094–7 Maintenance of records; submittal of information; right of entry.

Section 86.094–7 includes text that specifies requirements that differ from § 86.091–7. Where a paragraph in § 86.091–7 is identical and applicable to § 86.094–7, this may be indicated by specifying the corresponding paragraph and the statement ''[Reserved]. For guidance see § 86.091–7.'' Where a corresponding paragraph of § 86.091–7 is not applicable, this is indicated by the statement ''[Reserved].''

(a) Introductory text through (a)(2) [Reserved]. For guidance see § 86.091–7.

(a)(3) All records, other than routine emission test records, required to be maintained under this subpart shall be retained by the manufacturer for a period of eight (8) years after issuance of all certificates of conformity to which they relate. Routine emission test records shall be retained by the manufacturer for a period of one (1) year after issuance of all certificates of conformity to which they relate. Records may be retained as hard copy or reduced to microfilm, punch cards, etc.,

depending on the record retention procedures of the manufacturer, provided, that in every case all the information contained in the hard copy shall be retained.

(b) Through (c)(2) [Reserved]. For guidance see § 86.091–7.

(c)(3) The manufacturer (or contractor for the manufacturer, if applicable) shall retain all records required to be maintained under this section for a period of eight (8) years from the due date for the end-of-model year averaging, trading, and banking reports. Records may be retained as hard copy or reduced to microfilm, ADP files, etc., depending on the manufacturer's record retention procedure, provided that in every case all the information contained in the hard copy is retained.

(c)(4) Through (d)(1)(v) [Reserved]. For guidance see § 86.091–7.

(d)(1)(vi) Any facility where any record or other document relating to the information specified in paragraph (h) of this section is located.

(2) Upon admission to any facility referred to in paragraph (d)(1) of this section, any EPA Enforcement Officer or any EPA authorized representative shall be allowed:

(i) To inspect and monitor any part or aspect of such procedures, activities, and testing facilities, including, but not limited to, monitoring vehicle (or engine) preconditioning, emissions tests and mileage (or service) accumulation, maintenance, and vehicle soak and storage procedures (or engine storage procedures), and to verify correlation or calibration of test equipment;

(ii) To inspect and make copies of any such records, designs, or other documents, including those records specified in § 86.091–7(c); and

(iii) To inspect and make copies of any such records, designs or other documents including those records specified in paragraph (h) of this section; and

(iv) To inspect and/or photograph any part or aspect of any such certification vehicle (or certification engine) and any components to be used in the construction thereof.

(d)(3)–(g) [Reserved]. For guidance see § 86.091–7.

(h)(1) The manufacturer (or contractor for the manufacturer, if applicable) of any model year 1994 through 1997 light-duty vehicle or light light-duty truck or model year 1994 through 1998 heavy light-duty truck that is certified shall establish, maintain, and retain the following adequately organized and indexed records for each such vehicle:

(i) EPA engine family;

(ii) Vehicle identification number;

(iii) Model year and production date;

(iv) Shipment date;

(v) Purchaser; and

(vi) Purchase contract.

(2) In addition, the manufacturer (or contractor for the manufacturer, if applicable) of each certified engine family shall establish, maintain, and retain adequately organized records of the actual U.S. sales volume for the model year for each engine family. The manufacturer may petition the Administrator to allow actual volume produced for U.S. sale to be used in lieu of actual U.S. sales. Such petition shall be submitted within 30 days of the end of the model year to the Manufacturer Operations Division. For the petition to be granted, the manufacturer must establish to the satisfaction of the Administrator that actual production volume is functionally equivalent to actual sales volume.

(3) The manufacturer (or contractor for the manufacturer, if applicable) shall retain all records required to be maintained under this section for a period of eight (8) years from the due date for the applicable end-of-model year report. Records may be retained as hard copy or reduced to microfilm, ADP film, etc., depending on the manufacturer's record retention procedure, provided that in every case all the information contained in the hard copy is retained.

(4) Nothing in this section limits the Administrator's discretion in requiring the manufacturer to retain additional records or submit information not specifically required by this section.

(5) Pursuant to a request made by the Administrator, the manufacturer shall submit to him the information that is required to be retained.

(6) *Voiding a certificate.* (i) EPA may void ab initio a certificate for a vehicle certified to Tier 0 certification standards for which the manufacturer fails to retain the records required in this

section or to provide such information to the Administrator upon request.

(ii) EPA may void ab initio a certificate for a 1994 or 1995 model year light-duty vehicle or light-duty truck that is not certified in compliance with the cold temperature CO standard for which the manufacturer fails to retain the records required in this section or to provide such information to the Administrator upon request.

(iii) Any voiding ab initio of a certificate under § 86.094–7(c) and paragraph (h) of this section will be made only after the manufacturer concerned has been offered an opportunity for a hearing conducted in accordance with § 86.614 for light-duty vehicles or under § 86.1014 for light-duty trucks and heavy-duty engines.

(i) Any voiding ab initio of a certificate under § 86.091–7 (c) and paragraph (h) of this section will be made only after the manufacturer concerned has been offered an opportunity for a hearing conducted in accordance with § 86.614 for light-duty vehicles or under § 86.1014 for light-duty trucks and heavy-duty engines.

[56 FR 25740, June 5, 1991, as amended at 57 FR 31897, July 17, 1992]

§ 86.094–8 Emission standards for 1994 and later model year light-duty vehicles.

Section 86.094–8 includes text that specifies requirements that differ from § 86.090–8. Where a paragraph in § 86.090–8 is identical and applicable to § 86.094–8, this may be indicated by specifying the corresponding paragraph and the statement ''[Reserved]. For guidance see § 86.090–8.'' Where a corresponding paragraph of § 86.090–8 is not applicable, this is indicated by the statement ''[Reserved].''

(a)(1) *Standards.* (i) Exhaust emissions from 1994 and later model year vehicles (optional for 1994 through 1996 model year gaseous-fueled vehicles) shall meet all standards in tables A94–2, A94–3, A94–5 and A94–6 in the rows designated with the applicable fuel type, according to the implementation schedule in tables A94–1 and A94–4, as follows:

(A)(*1*)(*i*) A minimum of the percentage shown in table A94–1 of a manufacturer's sales of the applicable model year's light-duty vehicles shall not exceed the applicable Tier 1 standards in table A94–2 and shall not exceed the applicable Tier 1 standards in table A94–3. The remaining vehicles shall not exceed the applicable Tier 0 standards in table A94–2.

(*ii*) Optionally, a minimum of the percentage shown in table A94–1 of a manufacturer's combined sales of the applicable model year's light-duty vehicles and light light-duty trucks shall not exceed the applicable Tier 1 standards. Under this option, the light-duty vehicles shall not exceed the applicable Tier 1 standards in table A94–2 and shall not exceed the applicable Tier 1 standards in table A94–3. Further, the light light-duty trucks shall not exceed the applicable Tier 1 standards in table A94–8 of § 86.094–9 and shall not exceed the applicable Tier 1 standards of table A94–9 of § 86.094–9. The remaining percentage of the manufacturer's combined sales of the applicable model year's light-duty vehicles and light light-duty trucks shall not exceed the corresponding Tier 0 standards.

(*2*) A minimum of the percentage shown in table A94–4 of a manufacturer's sales of the applicable model year's light-duty vehicles shall not exceed the applicable Tier 1 standards in table A94–5 and shall not exceed the applicable Tier 1 standards in table A94–6. The remaining vehicles shall not exceed the applicable Tier 0 standards in table A94–5.

TABLE A94–1—IMPLEMENTATION SCHEDULE FOR LIGHT-DUTY VEHICLES FOR HCS, CO AND NO_X

Model year	Tier 1 percentage
1994	40
1995	80
After 1995	100

TABLE A94–2—INTERMEDIATE USEFUL LIFE STANDARDS (G/MI) FOR LIGHT-DUTY VEHICLES FOR HCS, CO AND NO_X

Fuel	Standards	THC	NMHC	THCE	NMHCE	CO	NO_X
Gasoline	Tier 0	0.41	...	...	...	3.4	1.0
Gasoline	Tier 1	0.41	0.25	...	...	3.4	0.4
Diesel	Tier 0	0.41	...	...	...	3.4	1.0
Diesel	Tier 1	0.41	0.25	...	...	3.4	1.0
Methanol	Tier 0	...	...	0.41	...	3.4	1.0
Methanol	Tier 1	...	...	0.41	0.25	3.4	0.4
Natural Gas	Tier 0	...	0.34	...	...	3.4	1.0
Natural Gas	Tier 1	...	0.25	...	...	3.4	0.4
LPG	Tier 0	0.41	...	...	...	3.4	1.0
LPG	Tier 1	0.41	0.25	...	...	3.4	0.4

TABLE A94–3—FULL USEFUL LIFE STANDARDS (G/MI) FOR LIGHT-DUTY VEHICLES FOR HCS, CO AND NO_X

Fuel	Standards	THC	NMHC	THCE	NMHCE	CO	NO_X
Gasoline	Tier 0	...	...	...	...	...	...
Gasoline	Tier 1	...	0.31	...	...	4.2	0.6
Diesel	Tier 0	...	...	...	...	...	...
Diesel	Tier 1	...	0.31	...	...	4.2	1.25
Methanol	Tier 0	...	...	...	...	...	...
Methanol	Tier 1	...	...	...	0.31	4.2	0.6
Natural Gas	Tier 0	...	...	...	...	...	...
Natural Gas	Tier 1	...	0.31	...	...	4.2	0.6
LPG	Tier 0	...	...	...	...	...	...
LPG	Tier 1	...	0.31	...	...	4.2	0.6

TABLE A94–4—IMPLEMENTATION SCHEDULE FOR LIGHT-DUTY VEHICLES FOR PM

Model year	Tier 1 percentage
1994	40
1995	80
After 1995	100

TABLE A94–5—INTERMEDIATE USEFUL LIFE STANDARDS (G/MI) FOR LIGHT-DUTY VEHICLES FOR PM

Fuel	Standards	PM
Gasoline	Tier 0	...
Gasoline	Tier 1	0.08
Diesel	Tier 0	0.20
Diesel	Tier 1	0.08
Methanol	Tier 0	[1] 0.20
Methanol	Tier 1	0.08
Natural Gas	Tier 0	[1] 0.20
Natural Gas	Tier 1	0.08
LPG	Tier 0	[1] 0.20
LPG	Tier 1	0.08

[1] Applicable only to diesel-cycle vehicles.

TABLE A94–6—FULL USEFUL LIFE STANDARDS (G/MI) FOR LIGHT-DUTY VEHICLES FOR PM

Fuel	Standards	PM
Gasoline	Tier 0	...
Gasoline	Tier 1	0.10
Diesel	Tier 0	...
Diesel	Tier 1	0.10
Methanol	Tier 0	...
Methanol	Tier 1	0.10
Natural Gas	Tier 0	...
Natural Gas	Tier 1	0.10
LPG	Tier 0	...
LPG	Tier 1	0.10

(B)(*1*)(*i*) Sales percentages for the purposes of determining compliance with paragraph (a)(1)(i)(A) of this section shall be based on total actual U.S. sales of light-duty vehicles of the applicable model year by a manufacturer to a dealer, distributor, fleet operator, broker, or any other entity which comprises the point of first sale. If the option of paragraph (a)(1)(i)(A)(*1*)(*ii*) of this section is taken, such sales percentages shall be based on the total actual combined U.S. sales of light-duty vehicles and light light-duty trucks of the applicable model year by a manufacturer to a dealer, distributor, fleet operator, broker, or any other entity which comprises the point of first sale.

(*ii*) The manufacturer may petition the Administrator to allow actual volume produced for U.S. sale to be used in lieu of actual U.S. sales for purposes of determining compliance with the implementation schedule sales percentages of tables A94–1 and A94–4 of this section. Such petition shall be submitted within 30 days of the end of the model year to the Manufacturers Operations Division. For the petition to be granted, the manufacturer must establish to the satisfaction of the Administrator that actual production volume is functionally equivalent to actual sales volume.

(*iii*) The manufacturer may count toward the sales percentages light-duty vehicles of the applicable model year that meet certain standards for that same model year contained in Title 13, California Code of Regulations, Section 1960.1, and the incorporated ''California Exhaust Emission Standards and Test Procedures for 1988 and Subsequent Model Passenger Cars, Light-Duty Trucks, and Medium-Duty Vehicles.'' (Copies may be obtained from Barclays Law Publishers, P.O. Box 3066, San Francisco, CA 94080.) The relevant standards from that source are those that are designated as phase-in standards for selected pollutants and were first applied in the 1993 model year, as well as those for all remaining pollutants that require compliance at the one hundred percent level. If this option is taken, all light-duty vehicles sold in jurisdictions adopting such standards shall be counted toward the total upon which the sales percentage is based. If this option is not taken, light-duty vehicles sold in such jurisdictions are to be excluded from counting toward either the total upon which the sales percentage is based or the sales percentage itself.

(*iv*) Small volume manufacturers, as defined in § 86.092–14 (b)(1) and (2), are exempt from the implementation schedules of tables A94–1 and A94–4 of this section for model years 1994 and 1995. For small volume manufacturers, Tier 0 standards of tables A94–2 and A94–5 continue to apply until model year 1996 when one hundred percent compliance with the Tier 1 standards of tables A94–2, A94–3, A94–5, and A94–6 is required. This exemption does not apply to small volume engine families as defined in § 86.092–14 (b)(5).

(*2*)(*i*) Where the required implementation schedule sales percentages for in-use purposes, as prescribed in subpart H of this part, are the same in a given model year as the required implementation schedule sales percentages for certification purposes, as prescribed in this section, the same engine families must comprise the respective percentages.

(*ii*) Where the required implementation schedule sales percentages for in-use purposes differ from implementation schedule sales percentages for certification purposes in a particular model year, the manufacturer must designate, at the time of Application for Certification, which families will meet each applicable in-use phase-in percentage.

(*3*) The manufacturer must state at the time of Application for Certification, based on projected U.S. sales or projected production for U.S. sale, which families will be used to attain the required implementation schedule sales percentages for certification purposes.

(*4*) A manufacturer can not use one set of engine families to meet its intermediate useful life standards and another to meet its full useful life standards. The same families which are used to meet the intermediate useful life standards will be required without deviation to meet the corresponding full useful life standards.

(ii) A manufacturer may elect to include all or some of its diesel-cycle

light-duty vehicle engine families subject to the Tier 0 standards in the appropriate particulate averaging program (petroleum or methanol), provided that vehicles produced for sale in California or in designated high-altitude areas may be averaged only within each of these areas. Averaging is not permitted between fuel types. If the manufacturer elects to average light-duty vehicles and light-duty trucks together in the appropriate particulate averaging program, its composite particulate standard applies to the combined set of light-duty vehicles and light-duty trucks included in the average and is calculated as defined in § 86.090–2.

(2) The standards set forth in paragraph (a)(1)(i) of this section refer to the exhaust emitted over a driving schedule as set forth in subpart B of this part and measured and calculated in accordance with those procedures. The test weight basis for light-duty vehicles, for the purposes of determining equivalent test weight as prescribed in § 86.129–94, shall be loaded vehicle weight.

(b) Fuel evaporative emissions from 1994 and later model year light-duty vehicles shall not exceed (compliance with these standards is optional for 1994 model year methanol-fueled engines):

(1) *Hydrocarbons (for gasoline-fueled vehicles).* 2.0 grams per test.

(2) *Total Hydrocarbon Equivalent (for methanol-fueled vehicles).* 2.0 grams carbon per test.

(3) The standards set forth in paragraphs (b) (1) and (2) of this section refers to a composite sample of the fuel evaporative emissions collected under the conditions set forth in subpart B of this part and measured in accordance with those procedures.

(c) No crankcase emissions shall be discharged into the ambient atmosphere from any 1994 and later model year Otto-cycle, or methanol-or gaseous-fueled diesel light-duty vehicle. This requirement is optional for 1994 through 1996 model year gaseous-fueled light-duty vehicles.

(d)–(f) [Reserved]. For guidance see § 86.090–8.

(g) Any 1994 and later model year light-duty vehicle that a manufacturer wishes to certify for sale shall meet the emission standards under both low- and high-altitude conditions as specified in § 86.082–2, except as provided in paragraphs (h) and (i) of this section. Vehicles shall meet emission standards under both low- and high-altitude conditions without manual adjustments or modifications. Any emission control device used to meet emission standards under high-altitude conditions shall initially actuate (automatically) no higher than 4,000 feet above sea level.

(h) The manufacturer may exempt 1994 and later model year vehicles from compliance at high altitude with the emission standards set forth in paragraphs (a) and (b) of this section if the vehicles are not intended for sale at high altitude and if the requirements of paragraphs (h) (1) and (2) of this section are met.

(1) A vehicle configuration shall only be considered eligible for exemption under paragraph (h) of this section if the requirements of either paragraph (h)(1) (i), (ii), (iii), or (iv) of this section are met.

(i) Its design parameters (displacement-to-weight ratio (D/W) and engine speed-to-vehicle-speed ratio (N/V)) fall within the exempted range for that manufacturer for that year. The exempted range is determined according to the following procedure:

(A) The manufacturer shall graphically display the D/W and N/V data of all vehicle configurations it will offer for the model year in question. The axis of the abscissa shall be D/W (where (D) is the engine displacement expressed in cubic centimeters and (W) is the equivalent vehicle test weight expressed in pounds), and the axis of the ordinate shall be N/V (where (N) is the crankshaft speed expressed in revolutions per minute and (V) is the vehicle speed expressed in miles per hour). At the manufacturer's option, either the 1:1 transmission gear ratio or the lowest numerical gear ratio available in the transmission will be used to determine N/V. The gear selection must be the same for all N/V data points on the manufacturer's graph. For each transmission/axle ratio combination, only the lowest N/V value shall be used in the graphical display.

(B) The product line is then defined by the equation, $N/V = C(D/W)^{-0.9}$, where the constant, C, is determined by the requirement that all the vehicle data points either fall on the line or lie to the upper right of the line as displayed on the graphs.

(C) The exemption line is then defined by the equation, $N/V = C(0.84\ D/W)^{-0.9}$, where the constant, C, is the same as that found in paragraph (h)(1)(i)(B) of this section.

(D) The exempted range includes all values of N/V and D/W which simultaneously fall to the lower left of the exemption line as drawn on the graph.

(ii) Its design parameters fall within the alternate exempted range for that manufacturer that year. The alternate exempted range is determined by substituting rated horsepower (hp) for displacement (D) in the exemption procedure described in paragraph (h)(1)(i) of this section and by using the product line $N/V = C(hp/W)^{-0.9}$.

(A) Rated horsepower shall be determined by using the Society of Automotive Engineers Test Procedure J 1349, June 1990, Engine Power Test Code—Spark Ignition and Compression Ignition—Net Power Rating. This incorporation by reference was approved by the Director of the Federal Register in accordance with 5 U.S.C. 552(a) and 1 CFR part 51. Copies may be obtained from SAE International, 400 Commonwealth Drive, Warrendale, PA, 15096–0001. Copies may be inspected at U.S. EPA, OAR, 401 M Street, SW., Washington, DC, 20460, or at the Office of the Federal Register, 800 North Capitol Street, NW., suite 700, Washington, DC. Any of the horsepower determinants within that test procedure may be used, as long as it is used consistently throughout the manufacturer's product line in any model year.

(B) No exemptions will be allowed under paragraph (h)(1)(ii) of this section to any manufacturer that has exempted vehicle configurations as set forth in paragraph (h)(1)(i) of this section.

(iii) Its acceleration time (the time it takes a vehicle to accelerate from 0 miles per hour to a speed not less than 40 miles per hour and not greater than 50 miles per hour) under high-altitude conditions is greater than the largest acceleration time under low-altitude conditions for that manufacturer for that year. The procedure to be followed in making this determination is:

(A) The manufacturer shall list the vehicle configuration and acceleration time under low-altitude conditions of that vehicle configuration which has the highest acceleration time under low-altitude conditions of all the vehicle configurations it will offer for the model year in question. The manufacturer shall also submit a description of the methodology used to make this determination.

(B) The manufacturer shall then list the vehicle configurations and acceleration times under high-altitude conditions of all those vehicle configurations which have higher acceleration times under high-altitude conditions than the highest acceleration time at low altitude identified in paragraph (h)(1)(iii)(A) of this section.

(iv) In lieu of performing the test procedure of paragraphs (h)(1)(iii) (A) and (B) of this section, its acceleration time can be estimated based on the manufacturer's engineering evaluation, in accordance with good engineering practice, to meet the exemption criteria of paragraph (h)(1)(iii) of this section.

(2) A vehicle shall only be considered eligible for exemption under this paragraph (h) if at least one configuration of its model type (and transmission configuration in the case of vehicles equipped with manual transmissions, excluding differences due to the presence of overdrive) is certified to meet emission standards under high-altitude conditions as specified in paragraphs (a) through (c) and (g) of this section. The Certificate of Conformity (the Certificate) covering any exempted configuration(s) will also apply to the corresponding non-exempt configuration(s) required under this paragraph (h)(2). As a condition to the exemption, any suspension, revocation, voiding, or withdrawal of the Certificate as it applies to a non-exempt configuration for any reason will result in a suspension of the Certificate as it applies to the corresponding exempted configuration(s) of that model type, unless there is at least one other corresponding non-exempt configuration of the same

model type still covered by the Certificate. The suspension of the Certificate as it applies to the exempted configuration(s) will be terminated when any one of the following occurs:

(i) Another corresponding non-exempt configuration(s) receive(s) coverage under the Certificate; or

(ii) Suspension of the Certificate as it applies to the corresponding non-exempt configuration(s) is terminated; or

(iii) The Agency's action(s), with respect to suspension, revocation, voiding, or withdrawal of the Certificate as it applies to the corresponding non-exempt configuration(s), is reversed.

(3) The sale of a vehicle for principal use at a designated high-altitude location that has been exempted as set forth in paragraph (h) of this section will be considered a violation of section 203(a)(1) of the Clean Air Act.

(i)(1) The manufacturers may exempt 1994 and later model year vehicles from compliance at low altitude with the emission standards set forth in paragraph (a) of this section and § 86.090–8 (b) if the vehicles:

(i) Are not intended for sale at low altitude; and

(ii) Are equipped with a unique, high-altitude axle ratio (rear-wheel drive vehicles) or a unique, high-altitude drivetrain (front-wheel drive vehicles) with a higher N/V ratio than other configurations of that model type which are certified in compliance with the emission standards of paragraph (a) of this section and § 86.090–8 (b) under low-altitude conditions.

(2) The sale of a vehicle for principal use at low altitude that has been exempted as set forth in paragraph (i)(1) of this section will be considered a violation of section 203(a)(1) of the Clean Air Act.

(j) Any exempted light-duty vehicle that a manufacturer wishes to certify for sale under the provisions of § 86.090–8 (h) or paragraph (i) of this section is subject to the provisions of subpart Q of this part.

(k) *Cold Temperature Carbon Monoxide (CO) Standards.* (1) For gasoline-fueled light-duty vehicles, a minimum of the percentage shown in table A94–16 of a manufacturer's sales of the applicable model year's light-duty vehicles shall not exceed the applicable cold temperature CO standard of 10.0 grams per mile for an intermediate useful life of 50,000 miles, as measured and calculated under the provisions set forth in subpart C of this part. This standard applies under both low and high altitude conditions. At the manufacturer's option, the manufacturer may combine the sales of gasoline-fueled light-duty vehicles and gasoline-fueled light-duty trucks in determining compliance with the required 1994 and 1995 model year phase-in percentages as included in table A94–16.

(2)(i) Sales percentages for the purposes of determining compliance with paragraph (k)(1) of this section shall be based on total actual and, at the manufacturer's option, combined U.S. sales of light-duty vehicles, light light-duty trucks, and heavy light-duty trucks of the applicable model year by a manufacturer to a dealer, distributor, fleet operator, broker, or any other entity which comprises the point of first sale.

(ii) The manufacturer may petition the Administrator to allow actual volume produced for U.S. sales to be used in lieu of actual U.S. sales for purposes of determining compliance with the implementation schedule sales percentages of table A94–16. Such petition shall be submitted within 30 days of the end of the model year the Manufacturers Operations Division. For the petition to be granted, the manufacturer must establish to the satisfaction of the Administrator that actual production volume is functionally equivalent to actual sales volume.

(iii) The manufacturer may count towards the sales percentages those light-duty vehicles, light light-duty trucks, and heavy light-duty trucks of the applicable model year sold in the state of California or in jurisdictions which have adopted the California emission standards under section 177 of the Clean Air Act if those light-duty vehicles, light light-duty trucks, and heavy light-duty trucks certified have been to meet the federally mandated cold CO standards. If this option is taken, all light-duty vehicles, light light-duty trucks, and heavy light-duty trucks sold in California and such jurisdictions shall be counted toward the total upon which the sales percentage is based. If this option is not taken,

light-duty vehicles, light light-duty trucks, and heavy light-duty trucks sold in California or such jurisdictions are to be excluded from counting toward either the total upon which the sales percentage is based or the sales percentage itself.

(iv) Small volume manufacturers, as defined in § 86.092–14(b) (1) and (2), are exempt from the implementation schedules of table A94–16 for model years 1994 and 1995. This exemption does not apply to small volume engine families as defined in § 86.092–14(b)(5).

(v) The manufacturer must state at the time of applying for the Certificate, based on projected U.S. sales or projected production for U.S. sale, which engine families will be used to attain the required implementation schedule sales percentages.

[56 FR 25740, June 5, 1991, as amended at 57 FR 31898, July 17, 1992; 59 FR 48494, Sept. 21, 1994; 62 FR 47120, Sept. 5, 1997]

§ 86.094–9 Emission standards for 1994 and later model year light-duty trucks.

(a)(1) *Standards*—(i) *Light light-duty trucks.* Exhaust emission from 1994 and later model year light light-duty trucks shall meet all standards in Tables A94–8, A94–9, A94–11 and A94–12 in the rows designated with the applicable fuel type and loaded vehicle weight, according to the implementation schedule in Tables A94–7 and A94–10 as follows (optional for 1994 through 1996 model year gaseous-fueled light light-duty trucks):

(A)(*1*)(*i*) A minimum of the percentage shown in table A94–7 of a manufacturer's sales of the applicable model year's light light-duty trucks shall not exceed the applicable Tier 1 standards in table A94–8 and shall not exceed the applicable Tier 1 standards in table A94–9. The remaining vehicles shall not exceed the applicable Tier 0 standards in table A94–9.

(*ii*) Optionally, a minimum of the percentage shown in table A94–7 of a manufacturer's combined sales of the applicable model year's light-duty vehicles and light light-duty trucks shall not exceed the applicable Tier 1 standards. Under this option, the light-duty vehicles shall not exceed the applicable Tier 1 standards in table A94–2 of § 86.094–8 and shall not exceed the applicable Tier 1 standards in table A94–3 of § 86.094–8. Further, the light light-duty trucks shall not exceed the applicable Tier 1 standards in table A94–8 and shall not exceed the applicable Tier 1 standards of table A94–9. The remaining percentage of the manufacturer's combined sales of the applicable model year's light-duty vehicles and light light-duty trucks shall not exceed the corresponding Tier 0 standards.

(*2*) A minimum of the percentage shown in table A94–10 of a manufacturer's sales of the applicable model year's light light-duty trucks shall not exceed the applicable Tier 1 standards in table A94–11 and shall not exceed the applicable Tier 1 standards in table A94–12. The remaining vehicles shall not exceed the applicable Tier 0 standards in table A94–12.

TABLE A94–7—IMPLEMENTATION SCHEDULE FOR LIGHT LIGHT-DUTY TRUCKS FOR HCS, CO, AND NO_X

Model year	Tier 1 percentage
1994	40
1995	80
After 1995	100

TABLE A94–8—INTERMEDIATE USEFUL LIFE STANDARDS (G/MI) FOR LIGHT LIGHT-DUTY TRUCKS FOR HCS, CO AND NO_X

Fuel	LVW (lbs)	Standards	THC	NMHC	THCE	NMHCE	CO	NO_X
Gasoline	0–3750	Tier 0						
Gasoline	0–3750	Tier 1		0.25			3.4	0.4
Gasoline	3751–5750	Tier 0						
Gasoline	3751–5750	Tier 1		0.32			4.4	0.7
Diesel	0–3750	Tier 0						
Diesel	0–3750	Tier 1		0.25			3.4	1.0

TABLE A94–8—INTERMEDIATE USEFUL LIFE STANDARDS (G/MI) FOR LIGHT LIGHT-DUTY TRUCKS FOR HCS, CO AND NO_X—Continued

Fuel	LVW (lbs)	Standards	THC	NMHC	THCE	NMHCE	CO	NO_X
Diesel	3751–5750	Tier 0	...	...	...	...	...	...
Diesel	3751–5750	Tier 1	...	0.32	...	...	4.4	...
Methanol	0–3750	Tier 0	...	...	...	...	...	...
Methanol	0–3750	Tier 1	...	...	...	0.25	3.4	0.4
Methanol	3751–5750	Tier 0	...	...	...	...	...	...
Methanol	3751–5750	Tier 1	...	...	...	0.32	4.4	0.7
Natural Gas	0–3750	Tier 0	...	...	...	...	...	...
Natural Gas	0–3750	Tier 1	...	0.25	...	...	3.4	0.4
Natural Gas	3751–5750	Tier 0	...	...	...	...	...	...
Natural Gas	3751–5750	Tier 1	...	0.32	...	...	4.4	0.7
LPG	0–3750	Tier 0	...	...	...	...	...	...
LPG	0–3750	Tier 1	...	0.25	...	...	3.4	0.4
LPG	3751–5750	Tier 0	...	...	...	...	...	...
LPG	3751–5750	Tier 1	...	0.32	...	...	4.4	0.7

TABLE A94–9—FULL USEFUL LIFE STANDARDS (G/MI) FOR LIGHT LIGHT-DUTY TRUCKS FOR HCS, CO AND NO_X

Fuel	LVW (lbs)	Standards	THC[1]	NMHC	THCE[1]	NMHCE	CO	NO_X
Gasoline	0–3750	Tier 0	0.80	...	...	...	10	1.2
Gasoline	0–3750	Tier 1	0.80	0.31	...	...	4.2	0.6
Gasoline	3751–5750	Tier 0	0.80	...	...	...	10	1.7
Gasoline	3751–5750	Tier 1	0.80	0.40	...	...	5.5	0.97
Diesel	0–3750	Tier 0	0.80	...	...	...	10	1.2
Diesel	0–3750	Tier 1	0.80	0.31	...	...	4.2	1.25
Diesel	3751–5750	Tier 0	0.80	...	...	...	10	1.7
Diesel	3751–5750	Tier 1	0.80	0.40	...	...	5.5	0.97
Methanol	0–3750	Tier 0	...	...	0.80	...	10	1.2
Methanol	0–3750	Tier 1	...	...	0.80	0.31	4.2	0.6
Methanol	3751–5750	Tier 0	...	...	0.80	...	10	1.7
Methanol	3751–5750	Tier 1	...	...	0.80	0.40	5.5	0.97
Natural Gas	0–3750	Tier 0	...	0.67	...	...	10	1.2
Natural Gas	0–3750	Tier 1	...	0.31	...	...	4.2	0.6
Natural Gas	3751–5750	Tier 0	...	0.67	...	...	10	1.7
Natural Gas	3751–5750	Tier 1	...	0.40	...	...	5.5	0.97
LPG	0–3750	Tier 0	0.80	...	...	...	10	1.2
LPG	0–3750	Tier 1	0.80	0.31	...	...	4.2	0.6
LPG	3751–5750	Tier 0	0.80	...	...	...	10	1.7
LPG	3751–5750	Tier 1	0.80	0.40	...	...	5.5	0.97

[1] Full useful life is 11 years or 120,000 miles, whichever occurs first.

TABLE A94–10—IMPLEMENTATION SCHEDULE FOR LIGHT LIGHT-DUTY TRUCKS FOR PM

Model year	Tier 1 Percentage
1994	0
1995	40
1996	80
After 1996	100

TABLE A94–11—INTERMEDIATE USEFUL LIFE STANDARDS (G/MI) FOR LIGHT LIGHT-DUTY TRUCKS FOR PM

Fuel	LVW (lbs)	Standards	PM
Gasoline	0–3750	Tier 0	...
Gasoline	0–3750	Tier 1	0.08
Gasoline	3751–5750	Tier 0	...
Gasoline	3751–5750	Tier 1	0.08
Diesel	0–3750	Tier 0	...
Diesel	0–3750	Tier 1	0.08
Diesel	3751–5750	Tier 0	...
Diesel	3751–5750	Tier 1	0.08
Methanol	0–3750	Tier 0	...
Methanol	0–3750	Tier 1	0.08
Methanol	3751–5750	Tier 0	...

TABLE A94–11—INTERMEDIATE USEFUL LIFE STANDARDS (G/MI) FOR LIGHT LIGHT-DUTY TRUCKS FOR PM—Continued

Fuel	LVW (lbs)	Standards	PM
Methanol	3751–5750	Tier 1	0.08
Natural Gas	0–3750	Tier 0	.....
Natural Gas	0–3750	Tier 1	0.08
Natural Gas	3751–5750	Tier 0	.....
Natural Gas	3751–5750	Tier 1	0.08
LPG	0–3750	Tier 0	.....
LPG	0–3750	Tier 1	0.08
LPG	3751–5750	Tier 0	.....
LPG	3751–5750	Tier 1	0.08

TABLE A94–12—FULL USEFUL LIFE STANDARDS (G/MI) FOR LIGHT LIGHT-DUTY TRUCKS FOR PM

Fuel	LVW (lbs)	Standards	PM
Gasoline	0–3750	Tier 0	.....
Gasoline	0–3750	Tier 1	0.10
Gasoline	3751–5750	Tier 0	.....
Gasoline	3751–5750	Tier 1	0.10
Diesel	0–3750	Tier 0	0.26
Diesel	0–3750	Tier 1	0.10
Diesel	3751–5750	Tier 0	0.13
Diesel	3751–5750	Tier 1	0.10
Methanol	0–3750	Tier 0	[1] 0.26
Methanol	0–3750	Tier 1	0.10
Methanol	3751–5750	Tier 0	[1] 0.13
Methanol	3751–5750	Tier 1	0.10
Natural Gas	0–3750	Tier 0	[1] 0.26
Natural Gas	0–3750	Tier 1	0.10
Natural Gas	3751–5750	Tier 0	[1] 0.13
Natural Gas	3751–5750	Tier 1	0.10
LPG	0–3750	Tier 0	[1] 0.26
LPG	0–3750	Tier 1	0.10
LPG	3751–5750	Tier 0	[1] 0.13
LPG	3751–5750	Tier 1	0.10

[1] Applicable only to diesel-cycle vehicles.

(B)(*1*)(*i*) Sales percentages for the purposes of determining compliance with paragraph (a)(1)(i)(A) of this section shall be based on total actual U.S. sales of light light-duty trucks of the applicable model year by a manufacturer to a dealer, distributor, fleet operator, broker, or any other entity which comprises the point of first sale. If the option of paragraph (a)(1)(i)(A)(*1*)(*ii*) of this section is taken, such sales percentages shall be based on the total actual combined U.S. sales of light-duty vehicles and light light-duty trucks of the applicable model year by a manufacturer to a dealer, distributor, fleet operator, broker, or any other entity which comprises the point of first sale.

(*ii*) The manufacturer may petition the Administrator to allow actual volume produced for U.S. sales to be used in lieu of actual U.S. sales for purposes of determining compliance with the implementation schedule sales percentages of tables A94–7 and A94–10 of this section. Such petition shall be submitted within 30 days of the end of the model year to the Manufacturers Operations Division. For the petition to be granted, the manufacturer must establish to the satisfaction of the Administrator that actual production volume is functionally equivalent to actual sales volume.

(*iii*) The manufacturer may count toward the sales percentages light light-duty trucks of the applicable model year that meet certain standards for that same model year contained in Title 13, ''California Code of Regulations, Section 1960.1, and the incorporated California Exhaust Emission Standards and Test Procedures for 1988 and Subsequent Model Passenger Cars, Light-Duty Trucks, and Medium-Duty Vehicles.'' (Copies may be obtained from Barclays Law Publishers, P.O.

Box 3066, San Francisco, CA 94080.) The relevant standards from that source are those that are designated as phase-in standards for selected pollutants and were first applied in the 1993 model year, as well as those for all remaining pollutants that require compliance at the one hundred percent level. If this option is taken, all light light-duty trucks sold in jurisdictions adopting such standards shall be counted toward the total upon which the sales percentage is based. If this option is not taken, light light-duty trucks sold in such jurisdictions are to be excluded from counting toward either the total upon which the sales percentage is based or the sales percentage itself.

(*iv*) Small volume manufacturers, as defined in § 86.092–14(b) (1) and (2), are exempt from the implementation schedules of table A94–7 of this section for model years 1994 and 1995 and from the implementation schedules of table A94–10 of this section for model years 1995 and 1996. For small volume manufacturers, the Tier 0 standards of table A94–9 continue to apply until model year 1996, and the Tier 0 standards of table A94–12 continue to apply until model year 1997, when one hundred percent compliance with the Tier 1 standards of tables A94–8, A94–9, A94–11, and A94–12 is required. This exemption does not apply to small volume engine families as defined in § 86.092–14(b)(5).

(*2*)(*i*)Where the required implementation schedule sales percentages for in-use purposes, as prescribed in subpart H of this part, are the same in a given model year as the required implementation schedule sales percentages for certification purposes, as prescribed in this section, the same engine families must comprise the respective percentages.

(*ii*) Where the required implementation schedule sales percentages for in-use purposes differ from implementation schedule sales percentages for certification purposes in a particular model year, the manufacturer must designate, at the time of Application for Certification, which families will meet each applicable in-use phase-in percentage.

(*3*) The manufacturer must state at the time of Application for Certification, based on projected U.S. sales or projected production for U.S. sale, which families will be used to attain the required implementation schedule sales percentages for certification purposes.

(*4*) A manufacturer can not use one set of engine families to meet its intermediate useful life standards and another to meet its full useful life standards. The same families which are used to meet the intermediate useful life standards will be required without deviation to meet the corresponding full useful life standards.

(ii) *Heavy light-duty trucks.* Exhaust emissions from 1994 and later model year heavy light-duty trucks shall meet all standards in Tables A94–14 and A94–15 in the rows designated with the applicable fuel type and loaded vehicle weight or adjusted loaded vehicle weight, as applicable, according to the implementation schedule in Table A94–13, as follows (optional for 1994 through 1996 model year gaseous-fueled heavy light-duty trucks):

(A) A minimum of the percentage shown in table A94–13 of a manufacturer's sales of the applicable model year's heavy light-duty trucks shall not exceed the applicable Tier 1 standards in table A94–14 and shall not exceed the applicable Tier 1 standards in table A94–15. The remaining vehicles shall not exceed the applicable Tier 0 standards in table A94–15.

TABLE A94–13—IMPLEMENTATION SCHEDULE FOR HEAVY LIGHT-DUTY TRUCKS FOR HCS, CO, NO_X AND PM

Model year	Tier 1 percentage
1994	0
1995	0
1996	50
after 1996	100

TABLE A94–14—INTERMEDIATE USEFUL LIFE STANDARDS (G/MI) FOR HEAVY LIGHT-DUTY TRUCKS FOR HCS, CO, NO_X AND PM

Fuel	ALVW (lbs)	Standards	THC	NMHC	THCE	NMHCE	CO	NO_X	PM
Gasoline	3751–5750	Tier 0							
Gasoline	3751–5750	Tier 1		0.32			4.4	0.7	
Gasoline	> 5750	Tier 0							
Gasoline	> 5750	Tier 1		0.39			5.0	1.1	
Diesel	3751–5750	Tier 0							
Diesel	3751–5750	Tier 1		0.32			4.4		
Diesel	> 5750	Tier 0							
Diesel	> 5750	Tier 1		0.39			5.0		
Methanol	3751–5750	Tier 0							
Methanol	3751–5750	Tier 1				0.32	4.4	0.7	
Methanol	> 5750	Tier 0							
Methanol	> 5750	Tier 1				0.39	5.0	1.1	
Natural Gas	3751–5750	Tier 0							
Natural Gas	3751–5750	Tier 1		0.32			4.4	0.7	
Natural Gas	> 5750	Tier 0							
Natural Gas	> 5750	Tier 1		0.39			5.0	1.1	
LPG	3751–5750	Tier 0							
LPG	3751–5750	Tier 1		0.32			4.4	0.7	
LPG	> 5750	Tier 0							
LPG	> 5750	Tier 1		0.39			5.0	1.1	

TABLE A94–15—FULL USEFUL LIFE STANDARDS (G/MI) FOR HEAVY LIGHT-DUTY TRUCKS FOR HCS, CO, NO_X AND PM

Fuel	LVW (lbs)	ALVW (lbs)	Standards	THC	NMHC	THCE	NMHCE	CO	NO_X	PM
Gasoline	0–3750		Tier 0	0.80				10	1.2	
Gasoline	>3750		Tier 0	0.80				10	1.7	
Gasoline		3751–5750	Tier 1	0.80	0.46			6.4	0.98	0.10
Gasoline		>5750	Tier 1	0.80	0.56			7.3	1.53	0.12
Diesel	0–3750		Tier 0	0.80				10	1.20	0.26
Diesel	>3750		Tier 0	0.80				10	1.7	0.13
Diesel		3751–5750	Tier 1	0.80	0.46			6.4	0.98	0.10
Diesel		>5750	Tier 1	0.80	0.56			7.3	1.53	0.12
Methanol	0–3750		Tier 0			0.80		10	1.2	[1] 0.26
Methanol	>3750		Tier 0			0.80		10	1.7	[1] 0.13
Methanol		3751–5750	Tier 1			0.80	0.46	6.4	0.98	0.10
Methanol		>5750	Tier 1			0.80	0.56	7.3	1.53	0.12
Natural Gas	0–3750		Tier 0		0.67			10	1.2	[1] 0.26
Natural Gas	>3750		Tier 0		0.67			10	1.7	[1] 0.13
Natural Gas		3751–5750	Tier 1		0.46			6.4	0.98	0.10
Natural Gas		>5750	Tier 1		0.56			7.3	1.53	0.12
LPG	0–3750		Tier 0	0.80				10	1.2	[1] 0.26
LPG	>3750		Tier 0	0.80				10	1.7	[1] 0.13
LPG		3751–5750	Tier 1	0.80	0.46			6.4	0.98	0.10
LPG		>5750	Tier 1	0.80	0.56			7.3	1.53	0.12

[1] Applicable only to diesel-cycle vehicles.

(B)(*1*)(*i*) Sales percentages for the purposes of determining compliance with paragraph (a)(1)(ii)(A) of this section shall be based on total actual U.S. sales of heavy light-duty trucks of the applicable model year by a manufacturer to a dealer, distributor, fleet operator, broker, or any other entity which comprises the point of first sale.

(*ii*) The manufacturer may petition the Administrator to allow actual volume produced for U.S. sale to be used in lieu of actual U.S. sales for purposes of determining compliance with the implementation schedule sales percentages of table A94–13 of this section. Such petition shall be submitted within 30 days of the end of the model year to the Manufacturers Operations Division. For the petition to be granted, the manufacturer must establish to the satisfaction of the Administrator that actual production volume is functionally equivalent to actual sales volume.

(*iii*) The manufacturer may count toward the sales percentages heavy light-

duty trucks of the applicable model year that meet certain standards for that same model year contained in Title 13, California Code of Regulations, Section 1960.1, and the incorporated ''California Exhaust Emission Standards and Test Procedures for 1988 and Subsequent Model Passenger Cars, Light-Duty Trucks, and Medium-Duty Vehicles.'' The relevant standards from that source are those that are designated as phase-in standards for selected pollutants and were first applied in the 1995 model year, as well as those for all remaining pollutants that require compliance at the one hundred percent level. If this option is taken, all heavy light-duty trucks sold in jurisdictions adopting such standards shall be counted toward the total upon which the sales percentage is based. If this option is not taken, heavy light-duty trucks sold in such jurisdictions are to be excluded from counting toward either the total upon which the sales percentage is based or the sales percentage itself.

(*iv*) Small volume manufacturers, as defined in § 86.092–14(b) (1) and (2), are exempt from the implementation schedule of table A94–13 of this section for model year 1996. For small volume manufacturers, the Tier 0 standards of table A94–15 continue to apply until model year 1997, when one hundred percent compliance with the Tier 1 standards of tables A94–14 and A94–15 is required. This exemption does not apply to small volume engine families as defined in § 86.092–14(b)(5).

(*2*)(*i*) Where the required implementation schedule sales percentages for in-use purposes, as prescribed in subpart H of this part, are the same in a given model year as the required implementation schedule sales percentages for certification purposes, as prescribed in this section, the same engine families must comprise the respective percentages.

(*ii*) Where the required implementation schedule sales percentages for in-use purposes differ from implementation schedule sales percentages for certification purposes in a particular model year, the manufacturer must designate, at the time of Application for Certification, which families will meet each applicable in-use phase-in percentage.

(*3*) The manufacturer must state at the time of Application for Certification, based on projected U.S. sales or projected production for U.S. sale, which families will be used to attain the required implementation schedule sales percentages for certification purposes.

(*4*) A manufacturer cannot use one set of engine families to meet its intermediate useful life standards and another to meet its full useful life standards. The same families which are used to meet the intermediate useful life standards will be required without deviation to meet the corresponding full useful life standards.

(iii) Exhaust emissions of carbon monoxide from 1994 and later model year light-duty trucks shall not exceed 0.50 percent of exhaust gas flow at curb idle at a useful life of 11 years or 120,000 miles, whichever first occurs (for Otto-cycle, and methanol-and gaseous-fueled diesel light-duty trucks only—optional for 1994 through 1996 model year gaseous-fueled light-duty trucks).

(iv)(A) A manufacturer may elect to include all or some of its light-duty truck engine families subject to the Tier 0 standards in the NO_X averaging program, provided that it does not elect to pay an NCP for noncompliance with any emission standard applicable to that light-duty truck family. Trucks produced for sale in California or in designated high-altitude areas may be averaged only within each of those areas. Petroleum-fueled and methanol-fueled engine families may not be averaged together. Otto-cycle and diesel engines families also may not be averaged together. If the manufacturer elects to participate in the NO_X averaging program, individual family NO_X emission limits may not exceed 2.3 grams per mile. If the manufacturer elects to average together NO_X emissions of light-duty trucks subject to different standards based on GVWR and loaded vehicle weight, its composite NO_X standard applies to the combined fleets of light-duty trucks of all weight categories included in the average, and is calculated as defined in § 86.088–2.

(B) A manufacturer may elect to include any diesel light-duty truck engine families subject to the Tier 0 standards in the appropriate particulate averaging program (petroleum or methanol), provided that it does not elect to pay an NCP for noncompliance with any emission standard applicable to that light-duty truck family. Trucks produced for sale in California or in designated high-altitude areas may be averaged only within each of those areas, and light-duty trucks greater than 3,750 lbs loaded vehicle weight may be averaged only with other light-duty trucks greater than 3,750 lbs loaded vehicle weight. Averaging is not permitted between fuel types. If the manufacturer elects to average both light-duty trucks 3,750 lbs loaded vehicle weight or less and light-duty vehicles together in the appropriate particulate averaging program, its composite particulate standard applies to the combined set of light-duty vehicles and light-duty trucks included in the average and is calculated as defined in § 86.088–2.

(2) The standards set forth in paragraphs (a)(1)(i) and (a)(1)(ii) of this section refer to the exhaust emitted over a driving schedule as set forth in subpart B of this part and measured and calculated in accordance with those procedures. The test weight basis for light light-duty trucks, and for heavy light-duty trucks certified to the Tier 0 standards of this section, for the purposes of determining equivalent test weight as prescribed in § 86.129–94, shall be loaded vehicle weight. The test weight basis for heavy light-duty trucks certified to the Tier 1 standards of this section, for the purposes of determining equivalent test weight as prescribed in § 86.129–94, shall be adjusted loaded vehicle weight. The standard set forth in paragraph (a)(1)(iii) of this section refers to the exhaust emitted at curb idle and measured and calculated in accordance with the procedures set forth in subpart P of this part.

(b) Fuel evaporative emissions from 1994 and later model year light-duty trucks shall not exceed:

(1) *Hydrocarbons (for gasoline-fueled light-duty trucks).* 2.0 grams per test.

(2) *Total Hydrocarbon Equivalent (for methanol-fueled light-duty trucks).* 2.0 grams per test.

(3) The standards set forth in paragraphs (b) (1) and (2) of this section refer to a composite sample of the fuel evaporative emissions collected under the conditions set forth in subpart B of this part and measured in accordance with those procedures.

(c) No crankcase emissions shall be discharged into the ambient atmosphere from any 1994 and later model year light-duty truck. This requirement is optional for 1994 through 1996 model year gaseous-fueled light-duty trucks.

(d) The CO, NO_X, and particulate standards set forth in paragraphs (d)(1)(ii)(A), (d)(1)(iii), and (d)(1)(iv) of this section, respectively, are applicable only to model year 1994 light-duty trucks certified to the Tier 0 standards of paragraphs (a)(1)(i) and (a)(1)(ii) of this section. The HC, THCE, and idle CO standards set forth in paragraphs (d)(1)(i)(A), (d)(1)(i)(B) and (d)(1)(ii)(B) of this section, respectively, are applicable only to model year 1994 light-duty trucks.

(1) Model year 1994 light-duty trucks sold for principal use at a designated high-altitude location shall be capable of meeting the following exhaust emission standards when tested under high-altitude conditions:

(i)(A) *Hydrocarbons (for Otto-cycle and diesel light-duty trucks when fueled with petroleum fuel and/or liquefied petroleum gas).* 1.0 grams per vehicle mile (0.62 grams per vehicle kilometer).

(B) *Total Hydrocarbon Equivalent (for methanol-fueled Otto-cycle and diesel light-duty trucks).* 1.0 gram per vehicle mile (0.62 gram per vehicle kilometer).

(C) *Nonmethane hydrocarbons (for Otto-cycle and diesel light-duty trucks when fueled with natural gas).* 0.83 gram per vehicle mile (0.52 gram per vehicle kilometer).

(ii) *Carbon Monoxide.* (A) 14 grams per vehicle mile (8.7 grams per vehicle kilometer).

(B) 0.50 percent of exhaust gas flow at curb idle (for Otto-cycle and methanol-fueled diesel light-duty trucks only).

(iii) *Oxides of Nitrogen.* (A) For light-duty trucks up to and including 3,750 lbs. loaded vehicle weight, 1.2 grams

per vehicle mile (0.75 grams per vehicle kilometer).

(B) For light-duty trucks 3,751 lbs. and greater loaded vehicle weight, 1.7 grams per vehicle mile (1.1 grams per vehicle kilometer).

(iv) *Particulate (for diesel light-duty trucks only).* (A) For light-duty trucks up to and including 3,750 lbs. loaded vehicle weight, 0.26 gram per vehicle mile (0.16 gram per vehicle kilometer).

(B) For light-duty trucks 3,751 lbs. and greater loaded vehicle weight, 0.13 gram per vehicle mile (0.08 gram per vehicle kilometer).

(2) The standards set forth in paragraphs (d)(1)(i), (d)(1)(ii)(A), (d)(1)(iii), and (d)(1)(iv) of this section refer to the exhaust emitted over a driving schedule as set forth in subpart B of this part and measured and calculated in accordance with those procedures. The standard set forth in paragraph (d)(1)(ii)(B) of this section refers to the exhaust emitted at curb idle and measured and calculated in accordance with the procedures set forth in subpart P of this part.

(e) Fuel evaporative emissions from 1994 model year light-duty trucks sold for principal use at a designated high-altitude location, when tested under high-altitude conditions, shall not exceed:

(1) *Hydrocarbons (for gasoline-fueled light-duty trucks).* 2.6 grams per test.

(2) *Total Hydrocarbon Equivalent (for methanol-fueled light-duty trucks).* 2.6 grams per test.

(3) The standards set forth in paragraphs (e) (1) and (2) of this section refer to a composite sample of the fuel evaporative emissions collected under the conditions set forth in subpart B of this part and measured in accordance with those procedures.

(f) No crankcase emissions shall be discharged into the ambient atmosphere from any 1994 model year light-duty trucks sold for principal use at a designated high-altitude location.

(g)(1) Any model year 1994 light-duty truck that a manufacturer wishes to certify for sale at low altitude must be capable of meeting high-altitude emission standards (specified in paragraphs (d) through (f) of this section). The manufacturer may specify vehicle adjustments or modifications to allow the vehicle to meet high-altitude standards but these adjustments or modifications may not alter the vehicle's basic engine, inertia weight class, transmission configuration, and axle ratio.

(i) A manufacturer may certify unique configurations to meet the high-altitude standards but is not required to certify these vehicle configurations to meet the low-altitude standards.

(ii) Any adjustments or modifications that are recommended to be performed on vehicles to satisfy the requirements of paragraph (g)(1) of this section:

(A) Shall be capable of being effectively performed by commercial repair facilities, and

(B) Must be included in the manufacturer's application for certification.

(2) Any model year 1995 and later light-duty truck and optionally model year 1994 light-duty truck that a manufacturer wishes to certify for sale shall meet the emission standards of paragraphs (a) through (c) of this section under both low- and high-altitude conditions as specified in § 86.082–2, except as provided in paragraphs (h) and (i) of this section. Vehicles shall meet emission standards under both low- and high-altitude conditions without manual adjustments or modifications. Any emission control device used to meet emission standards under high-altitude conditions shall initially actuate (automatically) no higher than 4,000 feet above sea level.

(h) The manufacturer may exempt 1994 and later model year light-duty trucks from compliance at high altitude with the emission standards set forth in paragraphs (a) and (b) of this section, and may exempt 1994 model year light-duty trucks from compliance with the high-altitude emission standards set forth in paragraphs (d) and (e) of this section, if the vehicles are not intended for sale at high altitude and if the requirements of paragraphs (h)(1) and (2) of this section are met.

(1) A vehicle configuration shall only be considered eligible for exemption under paragraph (h) of this section if the requirements of any of paragraphs (h)(1) (i), (ii), (iii), or (iv) of this section are met.

(i) Its design parameters (displacement-to-weight ratio (D/W) and engine speed-to-vehicle-speed ratio (N/V)) fall within the exempted range for that manufacturer for that year. The exempted range is determined according to the following procedure:

(A) The manufacturer shall graphically display the D/W and N/V data of all vehicle configurations it will offer for the model year in question. The axis of the abscissa shall be D/W (where (D) is the engine displacement expressed in cubic centimeters and (W) is the gross vehicle weight (GVW) expressed in pounds), and the axis of the ordinate shall be N/V (where (N) is the crankshaft speed expressed in revolutions per minute and (V) is the vehicle speed expressed in miles per hour). At the manufacturer's option, either the 1:1 transmission gear ratio or the lowest numerical gear ratio available in the transmission will be used to determine N/V. The gear selection must be the same for all N/V data points on the manufacturer's graph. For each transmission/axle ratio combination, only the lowest N/V value shall be used in the graphical display.

(B) The product line is then defined by the equation, $N/V = C(D/W)^{-0.9}$ where the constant, C, is determined by the requirement that all the vehicle data points either fall on the line or lie to the upper right of the line as displayed on the graphs.

(C) The exemption line is then defined by the equation, $N/V = C(0.84\ D/W)^{-0.9}$ where the constant, C, is the same as that found in paragraph (h)(1)(i)(B) of this section.

(D) The exempted range includes all values of N/V and D/W which simultaneously fall to the lower left of the exemption line as drawn on the graph.

(ii) Its design parameters fall within the alternate exempted range for that manufacturer that year. The alternate exempted range is determined by substituting rated horsepower (hp) for displacement (D) in the exemption procedure described in paragraph (h)(1)(i) of this section and by using the product line $N/V = C(hp/W)^{-0.9}$.

(A) Rated horsepower shall be determined by using the Society of Automotive Engineers Test Procedure J 1349 (copies may be obtained from SAE, 400 Commonwealth Dr., Warrendale, PA 15096), or any subsequent version of that test procedure. Any of the horsepower determinants within that test procedure may be used, as long as it is used consistently throughout the manufacturer's product line in any model year.

(B) No exemptions will be allowed under paragraph (h)(1)(ii) of this section to any manufacturer that has exempted vehicle configurations as set forth in paragraph (h)(1)(i) of this section.

(iii) Its acceleration time (the time it takes a vehicle to accelerate from 0 to a speed not less than 40 miles per hour and not greater than 50 miles per hour) under high-altitude conditions is greater than the largest acceleration time under low-altitude conditions for that manufacturer for that year. The procedure to be followed in making this determination is:

(A) The manufacturer shall list the vehicle configuration and acceleration time under low-altitude conditions of that vehicle configuration which has the highest acceleration time under low-altitude conditions of all the vehicle configurations it will offer for the model year in question. The manufacturer shall also submit a description of the methodology used to make this determination.

(B) The manufacturer shall then list the vehicle configurations and acceleration times under high-altitude conditions of all those vehicle configurations which have higher acceleration times under high-altitude conditions than the highest acceleration time at low altitude identified in paragraph (h)(1)(iii)(A) of this section.

(iv) In lieu of performing the test procedure of paragraph (h)(1)(iii) of this section, its acceleration time can be estimated based on the manufacturer's engineering evaluation, in accordance with good engineering practice, to meet the exemption criteria of paragraph (h)(1)(iii) of this section.

(2) A vehicle shall only be considered eligible for exemption under this paragraph if at least one configuration of its model type (and transmission configuration in the case of vehicles equipped with manual transmissions,

excluding differences due to the presence of overdrive) is certified to meet emission standards under high-altitude conditions as specified in paragraphs (a) through (g) of this section. The Certificate of Conformity (the Certificate) covering any exempted configuration(s) will also apply to the corresponding non-exempt configuration(s) required under this subparagraph. As a condition to the exemption, any suspension, revocation, voiding, or withdrawal of the Certificate as it applies to a non-exempt configuration for any reason will result in a suspension of the Certificate as it applies to the corresponding exempted configuration(s) of that model type, unless there is at least one other corresponding non-exempt configuration of the same model type still covered by the Certificate. The suspension of the Certificate as it applies to the exempted configuration(s) will be terminated when any one of the following occurs:

(i) Another corresponding non-exempt configuration(s) receive(s) coverage under the Certificate; or

(ii) Suspension of the Certificate as it applies to the corresponding non-exempt configuration(s) is terminated; or

(iii) The Agency's action(s), with respect to suspension, revocation, voiding or withdrawal of the Certificate as it applies to the corresponding non-exempt configuration(s), is reversed.

(3) The sale of a vehicle for principal use at a designated high-altitude location that has been exempted as set forth in paragraph (h)(1) of this section will be considered a violation of section 203(a)(1) of the Clean Air Act.

(i)(1) The manufacturers may exempt 1994 and later model year light-duty trucks from compliance at low altitude with the emission standards set forth in paragraphs (a) and (b) of this section if the vehicles:

(i) Are not intended for sale at low altitude; and

(ii) Are equipped with a unique, high-altitude axle ratio (rear-wheel drive vehicles) or a unique, high-altitude drivetrain (front-wheel drive vehicles) with a higher N/V ratio than other configurations of that model type which are certified in compliance with the emission standards of paragraphs (a) and (b) of this section under low-altitude conditions.

(2) The sale of a vehicle for principal use at low altitude that has been exempted as set forth in paragraph (i)(1) of this section will be considered a violation of section 203(a)(1) of the Clean Air Act.

(j) Any light-duty truck that a manufacturer wishes to certify for sale under the provisions of paragraphs (h) or (i) of this section is subject to the provisions of subpart Q of this part.

(k) *Cold Temperature Carbon Monoxide (CO) Standards*—(1) *Light light-duty trucks.* Exhaust emissions from 1994 and later model year gasoline-fueled light light-duty trucks with a loaded vehicle weight of 3,750 lbs or less shall meet a cold temperature CO standard of 10.0 grams per mile and gasoline-fueled light light-duty trucks with a loaded vehicle weight of greater than 3,750 lbs shall meet a cold temperature CO standard of 12.5 grams per mile, both for an intermediate useful life of 50,000 miles and according to the implementation schedule in table A94–16. This standard applies under both high and low altitude conditions. At the manufacturer's option, the manufacturer may combine the sales of gasoline-fueled light-duty vehicles, light-duty trucks, and heavy light-duty trucks in determining compliance with the required 1994 and 1995 model year phase-in percentages as included in table A94–16.

TABLE A94–16—IMPLEMENTATION SCHEDULE FOR COMBINED SALES OF LIGHT-DUTY VEHICLES AND LIGHT-DUTY TRUCKS FOR COLD CO

Model year	Sales percentage
1994	40
1995	80
After 1995	100

(2) *Heavy light-duty trucks.* Exhaust emissions from 1994 and later model year gasoline-fueled heavy light-duty trucks shall meet a cold temperature CO standard of 12.5 grams per mile for an intermediate useful life of 50,000 miles and according to the implementation schedule in table A94–16. This standard applies under both low and high altitude conditions. At the manufacturer's option, the manufacturer

may combine the sales of gasoline-fueled light-duty vehicles, light light-duty trucks, and heavy light-duty trucks in determining compliance with the required 1994 and 1995 model year phase-in percentages as included in table A94–16.

(3)(i) Sales percentages for the purposes of determining compliance with paragraphs (k)(1) and (k)(2) of this section shall be based on total actual and, at the manufacturer's option, combined U.S. sales of light-duty vehicles, light light-duty trucks, and heavy light-duty trucks of the applicable model year by a manufacturer to a dealer, distributor, fleet operator, broker, or any other entity which comprises the point of first sale.

(ii) The manufacturer may petition the Administrator to allow actual volume produced for U.S. sales to be used in lieu of actual U.S. sales for purposes of determining compliance with the implementation schedule sales percentages of table A94–16. Such petition shall be submitted within 30 days of the end of the model year to the Manufacturers Operations Division. For the petition to be granted, the manufacturer must establish to the satisfaction of the Administrator that actual production volume is functionally equivalent to actual sales volume. Approval of the use of production data will be presumed unless otherwise notified by the Agency within 30 days of submittal of the petition.

(iii) The manufacturer may count towards the sales percentages those light-duty vehicles, light light-duty trucks, and heavy light-duty trucks of the applicable model year sold in the state of California or in jurisdictions which have adopted the California emission standards under section 177 of the Clean Air Act if those light-duty vehicles, light light-duty trucks, and heavy light-duty trucks have been certified to meet the federally mandated cold CO standards. If this option is taken, all light-duty vehicles, light light-duty trucks and heavy light-duty trucks sold in California and such jurisdictions shall be counted toward the total upon which the sales percentage is based. If this option is not taken, light-duty vehicles, light light-duty trucks, and heavy light-duty trucks sold in California or such jurisdictions are to be excluded from counting toward either the total upon which the sales percentage is based or the sales percentage itself.

(iv) Small volume manufacturers, as defined in §86.092–14(b) (1) and (2), are exempt from the implementation schedules of table A94–16 for model years 1994 and 1995. This exemption does not apply to small volume engine families as defined in §86.092–14(b)(5).

(v) The manufacturer must state at the time of applying for the Certificate, based on projected U.S. sales or projected production for U.S. sale, which engine families will be used to attain the required implementation schedule sales percentages.

[56 FR 25742, June 5, 1991, as amended at 57 FR 31899, July 17, 1992; 59 FR 48495, Sept. 21, 1994; 60 FR 34335, June 30, 1995; 62 FR 47120, Sept. 5, 1997]

§86.094–11 Emission standards for 1994 and later model year diesel heavy-duty engines and vehicles.

(a)(1) Exhaust emissions from new 1994 and later model year diesel heavy-duty engines shall not exceed the following (optional for 1994 through 1996 model year new natural gas- and liquefied petroleum gas-fueled heavy-duty engines):

(i)(A) *Hydrocarbons (for diesel engines fueled with either petroleum-fuel or liquefied petroleum gas).* 1.3 grams per brake horsepower-hour (0.48 gram per megajoule), as measured under transient operating conditions.

(B) *Total Hydrocarbon Equivalent (for methanol-fueled diesel engines).* 1.3 grams per brake horsepower-hour (0.48 gram per megajoule), as measured under transient operating conditions.

(C) *Nonmethane hydrocarbons (for natural gas-fueled diesel engines).* 1.2 grams per brake horsepower-hour (0.45 gram per megajoule), as measured under transient operating conditions.

(ii) *Carbon monoxide.* (A) 15.5 grams per brake horsepower-hour (5.77 grams per megajoule), as measured under transient operating conditions.

(B) 0.50 percent of exhaust gas flow at curb idle (methanol-, natural gas- and liquefied petroleum gas-fueled diesel only).

(iii) *Oxides of nitrogen*. (A) 5.0 grams per brake horsepower-hour (1.9 grams per megajoule), as measured under transient operating conditions.

(B) A manufacturer may elect to include any or all of its diesel heavy-duty engine families in any or all of the NO_X averaging, trading, or banking programs for heavy-duty engines, within the restrictions described in § 86.094–15. If the manufacturer elects to include engine families in any of these programs, the NO_X FELs may not exceed 6.0 grams per brake horsepower-hour (2.2 grams per megajoule). This ceiling value applies whether credits for the family are derived from averaging, trading or banking programs.

(iv) *Particulate*. (A) For diesel engines to be used in urban buses, 0.07 gram per brake horsepower-hour (0.026 gram per megajoule), as measured under transient operating conditions.

(B) For all other diesel engines only, 0.10 gram per brake horsepower-hour (0.037 gram per megajoule), as measured under transient operating conditions.

(C) A manufacturer may elect to include any or all of its diesel heavy-duty engine families in any or all of the particulate averaging, trading, or banking programs for heavy-duty engines, within the restrictions described in § 86.094–15. If the manufacturer elects to include engine families in any of these programs, the particulate FEL may not exceed:

(*1*) For engine families intended for use in urban buses, 0.25 gram per brake horsepower-hour (0.093 gram per megajoule).

(*2*) For engine families *not* intended for use in urban buses, 0.60 gram per brake horsepower-hour (0.22 gram per megajoule).

(*3*) The ceiling values in paragraphs (a)(1)(iv)(C) (*1*) and (*2*) of this section apply whether credits for the family are derived from averaging, trading, or banking programs.

(b)(1) The opacity of smoke from new 1994 and later model year diesel heavy-duty engines shall not exceed (optional for 1994 through 1996 model year gaseous-fueled diesel heavy-duty engines):

(i) 20 percent during the engine acceleration mode.

(ii) 15 percent during the engine lugging mode.

(iii) 50 percent during the peaks in either mode.

(2) The standards set forth in paragraph (b)(1) of this section refer to exhaust smoke emissions generated under the conditions set forth in subpart I of this part and measured and calculated in accordance with those procedures.

(3) *Evaporative emissions* (total of non-oxygenated hydrocarbons plus methanol) from 1994 and later model year heavy-duty vehicles equipped with methanol-fueled diesel engines shall not exceed:

(i) For vehicles with a Gross Vehicle Weight Rating of up to 14,000 lbs, 3.0 grams per test.

(ii) For vehicles with a Gross Vehicle Weight Rating of greater than 14,000 lbs, 4.0 grams per test.

(4)(i) For vehicles with a Gross Vehicle Weight Rating of up to 26,000 lbs, the standards set forth in paragraph (b)(3) of this section refer to a composite sample of evaporative emissions collected under the conditions set forth in subpart M and measured in accordance with those procedures.

(ii) For vehicles with a Gross Vehicle Weight Rating of greater than 26,000 lbs, the standard set forth in paragraph (b)(3)(ii) of this section refers to the manufacturers, engineering design evaluation using good engineering practice (a statement of which is required in § 86.091–23(b)(4)(ii)).

(c) No crankcase emissions shall be discharged into the ambient atmosphere from any new 1994 or later model year methanol-fueled diesel, or any naturally-aspirated diesel heavy-duty engine (optional for 1994 through 1996 model year natural gas- and liquefied petroleum gas-fueled engines). For petroleum-, natural gas- and liquefied petroleum gas-fueled engines only; this provision does not apply to engines using turbochargers, pumps, blowers, or superchargers for air induction.

(d) Every manufacturer of new motor vehicle engines subject to the standards prescribed in this section shall, prior to taking any of the actions specified in section 203(a)(1) of the Act, test or cause to be tested motor vehicle engines in accordance with applicable

procedures in subpart I or N of this part to ascertain that such test engines meet the requirements of paragraphs (a), (b), and (c) and (d) of this section.

(Secs. 202, 203, 206, 207, 208, 301a, Clean Air Act, as amended; 42 U.S.C. 7521, 7522, 7525, 7541, 7542, 7601a)

[50 FR 10654, Mar. 15, 1985, as amended at 54 FR 14466, Apr. 11, 1989; 57 FR 19538, May 7, 1992; 58 FR 15799, Mar. 24, 1993; 59 FR 48497, Sept. 21, 1994; 62 FR 47120, Sept. 5, 1997]

§86.094–13 Light-duty exhaust durability programs.

(a)(1) This section describes the various durability programs available to manufacturers for determining exhaust deterioration factors (DFs) for the certification of 1994 and beyond model year light-duty vehicles and light-duty trucks. While this section describes many of the important elements of these durability programs, it is not intended as an exhaustive list of all requirements applicable either to these programs or to the certification process.

(2) The durability programs consist of various elements, such as a statement of applicability, a service accumulation method, vehicle/component selection methods, durability data vehicle compliance requirements, in-use verification requirements, optional elements, data reporting requirements, and additional requirements. Cross references to other sections in this subpart are indicated where appropriate.

(b) The following table summarizes the durability programs available to all manufacturers of light-duty vehicles and light-duty trucks. The Tier 1 and Tier 0 standards cited in the table are those specified in §86.094–8 (for light-duty vehicles) and §86.094–9 (for light-duty trucks). The durability programs described in this section are separate and distinct alternatives, such that determination of an exhaust deterioration factor under one program does not require compliance with the requirements of a different durability program.

Class	Standards	Durability program name	Optional elements
Light-duty Vehicles	Tier 1	Standard AMA	Carryover. Extrapolation. Substitute AMA.
		Production AMA	Carryover. Extrapolation. Substitute AMA.
		Alternative Service Accumulation	Carryover.
	Tier 0	Standard AMA	Carryover. Substitute AMA.
		Production AMA	Carryover. Substitute AMA.
		Alternative Service Accumulation	Carryover.
Light-duty Trucks	Tier 1 & Tier 0	Standard Self-Approval	Carryover.
		Alternative Service Accumulation	Carryover.

(c) *Standard AMA durability program*—(1) *Applicability*. The standard AMA durability program is applicable to light-duty vehicles in model years 1994 and beyond.

(2) *Service accumulation method*. The method shall be mileage accumulation performed on whole durability data vehicles, using the Durability Driving Schedule (commonly referred to as the AMA schedule) specified in appendix IV to this part. The provisions of §86.094–26(a), which include vehicle weight requirements, the duration of mileage accumulation, and the specification of emission tests to be performed during the mileage accumulation, shall apply. Scheduled and unscheduled maintenance may be performed on the vehicle in accordance with the provisions of §86.094–25.

(3) *Vehicle/component selection method*. Durability data vehicles shall be selected by the Administrator as required in §86.090–22(a) and in accordance with the provisions of §86.094–24(c)(1). Typically, the Administrator selects one durability data vehicle to represent each engine-system combination. The selection of durability data vehicles is also governed by §86.091–7(a)(2)(i)(A), which generally requires

that vehicles used for certification must be representative of production vehicles.

(4) *Durability data vehicle compliance requirements.* Durability data vehicle compliance requirements for the Standard AMA Durability Program are contained in § 86.094–28(a). These include the method of calculating deterioration factors, line crossing criteria, and related requirements.

(5) *In-use verification.* Manufacturer testing of in-use vehicles subsequent to certification is not a requirement of the Standard AMA Durability Program.

(6) *Optional elements*—(i) *Extrapolation.* Manufacturers selecting the Standard AMA Durability Program may petition the Administrator for the use of extrapolated mileage accumulation data according to the provisions of § 86.094–26(a)(4) for use in certifying light-duty vehicles to the Tier 1 standards of § 86.094–8. If use of extrapolated data is approved, deterioration factors are determined by the method of linear extrapolation described in § 86.094–28(a)(4)(i).

(ii) *Substitute AMA.* Manufacturers selecting the Standard AMA Durability Program may petition the Administrator under § 86.094–26(a)(2)(ii) to substitute a different whole-vehicle mileage accumulation schedule for the Durability Driving Schedule (standard AMA) specified in appendix IV to this part.

(iii) *Carryover and carryacross.* Manufacturers selecting the Standard AMA Durability Program may petition. the Administrator for the use of carryover or carryacross mileage accumulation data according to the provisions of § 86.094–24(f). If use of carryover or carryacross data is approved, deterioration factors are determined by the method of linear extrapolation described in § 86.094–28(a)(4)(i).

(7) *Data reporting requirements.* Data reporting requirements for the Standard AMA Durability Program are contained in §§ 86.094–21, 86.094–23(b)(1)(i), and 86.094–26 (a)(6)(ii) and (a)(7).

(d) *Production AMA durability program*—(1) *Applicability.* The production AMA durability program is applicable to light-duty vehicles in model years 1994 and beyond.

(2) *Service accumulation method.* The method shall be mileage accumulation performed on whole durability data vehicles, using the Durability Driving Schedule (commonly referred to as the AMA schedule) specified in appendix IV to this part. The provisions of § 86.094–26(a), which include vehicle weight requirements, the duration of mileage accumulation, and the specification of emission tests to be performed during the mileage accumulation, shall apply. Scheduled and unscheduled maintenance may be performed on the vehicle in accordance with the provisions of § 86.094–25.

(3) *Vehicle/component selection method.* Durability data vehicles shall be selected by the Administrator as required in § 86.090–22(a) and in accordance with the provisions of § 86.094–24(h). Typically, the Administrator selects several random production durability data vehicles, up to a maximum of three vehicles per engine family group.

(4) *Durability data vehicle compliance requirements.* Durability data vehicle compliance requirements for the Production AMA Durability Program are contained in § 86.094–28(a)(7). These include the method of calculating deterioration factors, line crossing criteria, and related requirements.

(5) *In-use verification.* The Production AMA Durability Program includes no requirement for manufacturer testing of in-use vehicles subsequent to certification.

(6) *Optional elements*—(i) *Extrapolation.* Manufacturers selecting the Production AMA Durability Program may petition the Administrator for the use of extrapolated mileage accumulation data according to the provisions of § 86.094–26(a)(4) for use in certifying light-duty vehicles to the Tier I standards of § 86.094–8. If use of extrapolated data is approved, deterioration factors are determined by the method of linear extrapolation described in § 86.094–28(a)(7)(ii)(B).

(ii) *Substitute AMA.* Manufacturers selecting the Production AMA Durability Program may petition the Administrator under § 86.094–26(a)(2)(ii) to substitute a different whole-vehicle mileage accumulation schedule for the Durability Driving Schedule (standard

AMA) specified in appendix IV to this part.

(iii) *Carryover and carryacross.* Manufacturers selecting the Production AMA Durability Program may petition the Administrator for the use of carryover or carryacross mileage accumulation data according to the provisions of § 86.094–24(h)(1)(v). If use of carryover or carryacross data is approved, deterioration factors are determined by the method of linear extrapolation described in § 86.094–28(a)(7)(ii)(B).

(7) Data reporting requirements for the Production AMA Durability Program are contained in §§ 86.094–21, 86.094–23(b)(1)(i), and 86.094–26 (a)(6)(ii) and (a)(7).

(8) *Additional requirements.* (i) For engine families subject to the procedures of the Production AMA Durability Program, the manufacturer shall submit deterioration factors to the Administrator for approval to use them for certification. The Administrator shall approve the use of deterioration factors that:

(A) The manufacturer attests are representative of the durability performance of its vehicles in actual field use when maintained according to the manufacturer's maintenance instructions (as limited under § 86.094–25(a)); and

(B) Are equal to or greater than the deterioration factors that EPA determines under paragraph (d)(8)(ii) of this section.

(ii) EPA shall determine minimum deterioration factors for engine families subject to the Production AMA Durability Program. This determination shall be based on a procedure of grouping engine families (see § 86.094–24(a)) in order to use historical certification data to determine deterioration factors for each engine family group. The historical data shall be updated yearly through the testing of production durability data vehicles. Test vehicle requirements under these procedures are contained in § 86.094–24 (h) and compliance requirements are contained in § 86.094–28(a)(7).

(iii) *Request procedures.* (A) A manufacturer wishing to participate in the Production AMA Durability Program must submit to the Administrator, for each model year, a written request describing the engine families that the manufacturer elects to be included in the program.

(B) The Administrator may declare ineligible any engine family for which the Administrator determines there is unreasonable risk in determining a deterioration factor using the methods of the Production AMA Durability Program. Furthermore, the Administrator may limit the number of engine families within the manufacturer's product line that are eligible for the Production AMA Durability Program.

(C) Upon approval of the manufacturer's request to participate, the Administrator and the manufacturer may enter into a written agreement prescribing the terms and conditions of the program. This agreement shall be equitable as compared to agreements entered into with other manufacturers. The agreement shall specify:

(*1*) The engine families to be included in the program and the engine family groups that have been established by the provisions of § 86.094–24(a) (8) and (9);

(*2*) The procedures for the selection of production durability data vehicles specified under the provisions of § 86.094–24(h); and

(*3*) The procedures for the determination of minimum exhaust emission deterioration factors for each engine family group.

(iv) *Withdrawal from Production AMA Durability Program.* (A) Subject to the conditions of paragraphs (d)(8)(iv) (B) through (F) of this section, a manufacturer may, at any time, withdraw all of its product line or separate engine family groups from this program. Only entire engine family groups may be withdrawn.

(B) Once any engine family in an engine family group is certified using deterioration factors determined in the Production AMA Durability Program, the manufacturer shall operate and test the production durability data vehicles specified in § 86.094–24(h) in accordance with the procedures of this part.

(C) The Administrator shall notify the manufacturer if a nonconformity of a category of vehicles within the engine family group is indicated by the production durability data. For the

purpose of this paragraph, a nonconformity is determined to exist if:

(*1*) Any emission data vehicle within an engine family of the model year most recently certified under the production AMA Durability Program is projected to exceed an emission standard by applying deterioration factors generated by a production durability data vehicle within the same engine family; or

(*2*) Any of the most recent model year's production durability data vehicle configurations tested under paragraph (d)(8)(iv)(B) of this section line crosses as defined in § 86.094–28(a)(7)(ii)(C). For the purpose of this paragraph, data from identical vehicles will be averaged as under § 86.094–28(a)(4)(i) (A) and (B)

(D) If the Administrator notifies a manufacturer of such a nonconformity, the manufacturer shall submit, by a date specified by the Administrator, a plan to remedy the nonconformity which is acceptable to the Director, Office of Mobile Sources. For the purpose of this paragraph, the term ''remedy the nonconformity'' will have the same meaning as it does when it appears in section 207(c)(1) of the Clean Air Act (42 U.S.C. 7541(c)(1)).

(E) The manufacturer shall comply with the terms of the remedial plan approved by the Director, Office of Mobile Sources.

(F) If a manufacturer does not comply with the requirements of paragraph (d)(8)(iv) (B), (D), or (E) of this section, the Administrator may deem the certificate of conformity for the affected engine families void *ab initio.*

(e) *Alternative Service Accumulation Durability Program*—(1) *Applicability*. The Alternative Service Accumulation Durability Program is applicable to light-duty vehicles and light-duty trucks in model years 1994 and beyond.

(2) *Service accumulation method*. (i) The manufacturer shall propose a service accumulation method for the Alternative Service Accumulation Durability Program, for advance approval by the Administrator. The method shall be consistent with good engineering practice and be designed to accurately predict the deterioration of the vehicle's emissions in actual use over its full useful life.

(ii) Manufacturers may propose service accumulation methods based upon whole-vehicle mileage accumulation, bench aging of individual components or systems, or a combination of the two approaches. Bench procedures should simulate the aging of components or systems over the applicable durability useful life as defined in § 86.094–2 and should simulate cycles and environments found in actual use. For this purpose, manufacturers may remove the emission-related components, in whole or in part, from the durability vehicle itself and deteriorate them independently. Vehicle testing for the purpose of determining deterioration factors may include the testing of durability vehicles that incorporate such bench-aged components.

(iii) Service accumulation shall be according to the method approved in advance by the Administrator.

(3) *Vehicle/component selection method*. The manufacturer shall propose a vehicle/component selection method for the Alternative Service Accumulation Durability Program for advance approval by the Administrator. The vehicle/component selection shall be according to the method approved in advance by the Administrator. The selection of durability data vehicles and components is also governed by § 86.091–7(a)(2)(i)(A), which generally requires that vehicles and components used for certification must be representative of production vehicles and components.

(4) *Durability data vehicle compliance requirements.* The manufacturer shall propose procedures for the calculation of deterioration factors and for the determination of vehicle compliance for advance approval by the Administrator. The Administrator may approve the use of such procedures if the manufacturer demonstrates that the resulting deterioration factors are likely to be representative of the in-use performance of the vehicles. The calculation of deterioration factors and the determination of vehicle compliance shall be according to the procedures approved in advance by the Administrator.

(5) *In-use verification*. Manufacturers selecting the Alternative Service Accumulation Durability Program shall agree to perform an in-use verification

program, which shall include testing on in-use vehicles certified under the program in the years subsequent to certification. The purpose of the in-use verification program is to confirm the adequacy of the manufacturer-designed components of the Alternative Service Accumulation Durability program. The manufacturer shall propose sample sizes, recruitment procedures, testing procedures, optional provisions for the cessation of testing in the event the in-use testing confirms the adequacy of elements of the Alternative Service Accumulation Durability Program, and remedies in the event the in-use testing fails to confirm the adequacy of elements of the Alternative Service Accumulation Durability program. These and other elements of in-use verification are subject to advance approval by the Administrator.

(6) *Optional element: Carryover and carryacross.* Manufacturers selecting the Alternative Service Accumulation Durability Program may petition the Administrator for the conditional use of carryover or carryacross mileage accumulation data according to the provisions of § 86.094–24(f). If use of carryover or carryacross data is approved, deterioration factors are determined by the method described in paragraph (e)(4) of this section.

(7) *Data reporting requirements.* (i) Data reporting requirements for the Alternative Service Accumulation Durability Program are contained in §§ 86.094–21, 86.094–23(b)(1)(i), and 86.094–26(a)(6)(ii) and (a)(7).

(ii) In addition to the reporting of deterioration factors determined under paragraph (e)(4) of this section, the manufacturer shall provide reliability data that shows to the Administrator's satisfaction that all emission-related components are designed to operate properly for the durability useful life of the vehicles in actual use (or such shorter intervals as permitted in section § 86.094–25).

(8) *Additional requirements.* (i) The manufacturer shall consolidate the approved versions for each of the required elements of the Alternative Service Accumulation Durability Program into a written agreement that documents the details of the program and the manufacturer's responsibilities. The manufacturer shall submit this agreement for approval by the Administrator as part of the application for certification.

(ii) The manufacturer may amend the written agreement entered into pursuant to paragraph (e)(8)(i) of this section so long as the manufacturer demonstrates to the satisfaction of the Administrator that the proposed amendments to the agreement improve upon the in-use verification portion of the existing agreement. Such amendment to the Alternative Service Accumulation Durability Program agreement is subject to the prior approval of the Administrator.

(iii) The certification requirements described in § 86.094–30(a)(14) are applicable.

(f) *Standard Self-Approval Durability Program*—(1) *Applicability.* The Standard Self-Approval Durability Program is applicable to light-duty trucks in the 1994 and beyond model years.

(2) *Service accumulation method.* The manufacturer shall determine the form and extent of service accumulation used in the Standard Self-Approval Durability Program, according to the provisions of § 86.094–26(b)(2). The method shall be consistent with good engineering practice and be designed to evaluate the mechanisms that are expected to cause deterioration of the vehicle's emissions over its full useful life.

(3) *Vehicle/component selection method.* The manufacturer shall determine the vehicle/component selection method for use in the Standard Self-Approval Durability Program according to the provisions of § 86.094–24(c)(2). Manufacturers shall select the vehicles, engines, subsystems, or components for each engine-system so that their emissions deterioration characteristics may be expected to represent those of in-use vehicles, based on good engineering judgment. The selection of durability data vehicles or components is also governed by § 86.091–7(a)(2)(A), which generally requires that vehicles and components used for certification must be representative of production vehicles and components.

(4) *Durability data vehicle compliance requirements.* Durability data vehicle compliance requirements for the

Standard Self-approval Durability Program are contained in § 86.094–28(b). These include the method of calculating deterioration factors and related requirements.

(5) *In-use verification.* The Standard Self-Approval Durability Program includes no requirement for manufacturer testing of in-use vehicles subsequent to certification.

(6) *Data reporting requirements.* Data reporting requirements for the Standard Self-Approval Durability Program are contained in §§ 86.094–21, 86.094–23(b)(1)(ii), and 86.094–26(d).

(7) *Additional requirement.* The Administrator does not approve the test procedures for establishing exhaust emission deterioration factors. The manufacturer shall submit these procedures and determinations as required in § 86.094–21(b)(5)(i)(A).

(g) *Assigned deterioration factor durability program*—(1) *Applicability*—(i) *Small volume manufacturers.* The Assigned Deterioration Factor Durability Program is applicable to light-duty vehicles and light-duty trucks certified under the small volume manufacturer provisions of §§ 86.094–1(e) and 86.094–14(b).

(ii) *Small volume engine families.* The Assigned Deterioration Factor Durability Program is available to light-duty vehicles and light-duty trucks certified under the small volume engine family provisions of § 86.094–24(e)(2).

(2) *Determination of deterioration factors.* No service accumulation method or vehicle/component selection method is required. Deterioration factors are proposed by the manufacturer or assigned by the Administrator based on the provisions of § 86.094–14(c)(7)(i)(C).

(3) *In-use verification.* The Assigned Deterioration Factor Durability Program includes no requirement for manufacturer testing of in-use vehicles subsequent to certification.

(4) *Data reporting requirements.* Data reporting requirements for the Assigned Deterioration Factor Durability Program are contained in § 86.094–14 (c)(4), (c)(6), and (c)(11)(ii).

[58 FR 4002, Jan. 12, 1993, as amended at 59 FR 36369, July 18, 1994; 62 FR 11082, Mar. 11, 1997; 62 FR 44875, Aug. 22, 1997]

§ 86.094–14 Small-volume manufacturers certification procedures.

(a)(1) The small-volume manufacturers certification procedures described in paragraphs (b) and (c) of this section are optional. Small-volume manufacturers may use these optional procedures to demonstrate compliance with the general standards and specific emission requirements contained in this subpart.

(2) To satisfy the durability data requirements of the small-volume manufacturers certification procedures, manufacturers of vehicles (or engines) as described in paragraph (b) of this section may use assigned deterioration factors that the Administrator determines by methods described in paragraph (c)(7)(i)(C) of this section. However, if no deterioration factor data (either the manufacturer's or industry-wide deterioration factor data) are available from previously completed durability data vehicles or engines used for certification, manufacturers of vehicles (or engines) as described in paragraph (b) of this section or with new technology not previously certified may use assigned deterioration factors that the Administrator determines by alternative methods, based on good engineering judgement. The factors that the Administrator determines by alternative methods will be published in an advisory letter or advisory circular.

(b)(1) The optional small-volume manufacturers certification procedures apply to light-duty vehicles, light-duty trucks, heavy-duty vehicles, and heavy-duty engines produced by manufacturers with U.S. sales, including all vehicles and engines imported under the provisions of §§ 85.1505 and 85.1509 of this chapter (for the model year in which certification is sought) of fewer than 10,000 units (Light-Duty Vehicles, Light-Duty Trucks, Heavy-Duty Vehicles and Heavy-Duty Engines combined).

(2) For the purpose of determining the applicability of paragraph (b)(1) of this section, the sales the Administrator shall use shall be the aggregate of the projected or actual sales of those vehicles and/or engines in any of these groupings:

(i) Vehicles and/or engines produced by two or more firms, one of which is 10 percent or greater part owned by another;

(ii) Vehicles and/or engines produced by any two or more firms if a third party has equity ownership of 10 percent or more in each of the firms;

(iii) Vehicles and/or engines produced by two or more firms having a common corporate officer(s) who is (are) responsible for the overall direction of the companies;

(iv) Vehicles and/or engines imported or distributed by all firms where the vehicles and/or engines are manufactured by the same entity and the importer or distributor is an authorized agent of the entity.

(3) If the aggregated sales, as determined in paragraph (b)(2) of this section are less than 301 units, the manufacturers in the aggregated relationship may certify under the provisions in this section that apply to manufacturers with sales of less than 301 units.

(4) If the aggregated sales, as determined in paragraph (b)(2) of this section are greater than 300 but fewer than 10,000 units, the manufacturers in the aggregated relationship may certify under the provisions in this section that apply to manufacturers with sales from and including 301 through 9,999 motor vehicles and motor vehicles engines per year.

(5) If the aggregated sales, as determined in paragraph (b)(2) of this section are equal to or greater than 10,000 units, then the manufacturers involved in the aggregated relationship will be allowed to certify a number of units under the small-volume engine family certification procedures (reference §86.094–24(e)) in accordance with the criteria identified in paragraphs (b)(5)(i) through (iii) of this section.

(i) If a manufacturer purchases less than 50 percent of another manufacturer, each manufacturer retains its right to certify 9,999 units using the small-volume engine family certification procedures.

(ii) If a manufacturer purchases 50 percent or more of another manufacturer, the manufacturer with the over 50 percent interest must share, with the manufacturer it purchased, its 9,999 units under the small-volume engine family certification procedures.

(iii) In a joint venture arrangement (50/50 ownership) between two manufacturers, each manufacturer retains its eligibility for 9,999 units under the small-volume engine family certification procedures, but the joint venture must draw its maximum 9,999 units from the units allocated to its parent manufacturers.

(c) Small-volume manufacturers shall demonstrate compliance with the applicable sections of this subpart. The appropriate model year of the applicable sections detailed in paragraphs (c)(1) through (15) of this section shall be determined in accordance with §86.084–4.

(1) Sections 86.094–1, 86.094–2, 86.094–3, 86.084–4, 86.090–5, 86.078–6, 86.094–7, 86.094–8, 86.094–9, and 86.094–11 are applicable.

(2) Section 86.080–12 is not applicable.

(3) Sections 86.094–13, 86.094–14, 86.084–15, and 86.085–20 are applicable.

(4) Small-volume manufacturers shall include in their records all of the information that EPA requires in §86.094–21. This information will be considered part of the manufacturer's application for certification. However, the manufacturer is not required to submit the information to the Administrator unless the Administrator requests it.

(5) Section 86.094–22 is applicable except as noted in paragraph (c)(5)(i) of this section.

(i) Small-volume light-duty vehicle and light-duty truck manufacturers may satisfy the requirements of §86.094–22(e) by including a statement of compliance on adjustable parameters in the application for certification. In the statement of compliance the manufacturer shall state that the limits, stops, seals, or other means used to inhibit adjustment have been designed to accomplish their intended purpose based on good engineering practice and past experience. If the vehicle parameter is adjustable the vehicle must meet emission standards with the parameter set any place within the adjustable range (reference §86.094–21).

(ii) [Reserved]

(6) Section 86.094–23 is applicable.

(7) Section 86.094–24 is applicable except as noted in paragraphs (c)(7) (i) through (ii) of this section.

(i) Small-volume manufacturers may satisfy the requirements of § 86.094–24 (b) and (c) in accordance with paragraphs (c)(7)(i) (A) through (C) of this section.

(A) *Emission data.* Selecting one emission data test vehicle (engine) per engine family by the worst-case emissions criteria in accordance with paragraph (c)(7)(i)(A) (*1*), (*2*), or (*3*) of this section.

(*1*) *Light-duty vehicles and light-duty trucks.* The manufacturer shall select the vehicle with the heaviest equivalent test weight (including options) within the engine family. Then within that vehicle the manufacturer shall select, in the order listed, the highest road load power, largest displacement, the transmission with the highest numerical final gear ratio (including overdrive), the highest numerical axle ratio offered in the engine family, and the maximum fuel flow calibration.

(*2*) *Heavy-duty Otto-cycle engines.* The manufacturer shall select one emission data engine first based on the largest displacement within the engine family. Then within the largest displacement the manufacturer shall select, in the order listed, highest fuel flow at the speed of maximum rated torque, the engine with the most advanced spark timing, no EGR or lowest EGR flow, and no air pump or lowest actual flow air pump.

(*3*) *Heavy-duty diesel engines.* The manufacturer shall select one emission data engine based on the highest fuel feed per stroke, primarily at the speed of maximum rated torque and secondarily at rated speed.

(B) Testing light-duty vehicles or light-duty truck emission data vehicles at any service accumulation distance of at least 2,000 miles (3,219 kilometers) or, catalyst equipped heavy-duty emission data engines at any service accumulation time of at least 62 hours, or non-catalyst equipped heavy-duty engine emission data engines at any service accumulation time determined by the manufacturer to result in stabilized emissions. The emission performance of the emission data vehicle or engine must be stabilized prior to emission testing.

(C) *Durability data.* Satisfying the durability data requirements by complying with the applicable procedures described in paragraphs (c)(7)(i)(C) (*1*) through (*4*) of this section.

(*1*) Manufacturers with aggregated sales of less than 301 motor vehicles and motor vehicle engines per year may use assigned deterioration factors that the Administrator determines and prescribes. The factors will be the Administrator's estimate, periodically updated and published in an advisory letter or advisory circular, of the 70th percentile deterioration factors calculated using the industry-wide data base of previously completed durability data vehicles or engines used for certification. However, the manufacturer may, at its option, accumulate miles (hours) on a durability data vehicle (engine) and complete emission tests for the purpose of establishing its own deterioration factors.

(*2*)(*i*) Manufacturers with aggregated sales from and including 301 through 9,999 motor vehicles and motor vehicle engines per year certifying light-duty vehicle exhaust emissions from vehicles equipped with proven emission control systems shall use assigned deterioration factors that the manufacturer determines based on its good engineering judgment. However, the manufacturer may not use deterioration factors less than either the average or 70th percentile of all of that manufacturer's deterioration factor data, whichever is less. These minimum deterioration factors shall be calculated according to procedures in paragraph (c)(7)(i)(C)(*2*)(*ii*), of this section. If the manufacturer does not have at least two data points to calculate these manufacturer specific average deterioration factors, then the deterioration factors shall be no less than the EPA supplied industry-wide deterioration factors. However, the manufacturer may, at its option, accumulate miles on a durability data vehicle and complete emission tests for the purpose of establishing its own deterioration factors.

(*ii*) The manufacturer's minimum deterioration factors shall be calculated using the deterioration factors from all

engine families, within the same vehicle/engine-fuel usage category (e.g., gasoline-fueled light-duty vehicle, etc.) previously certified to the same emission standards. The manufacturer shall use only deterioration factors from engine families previously certified by the manufacturer and the deterioration factors shall not be included in the calculation more than once. The deterioration factors for each pollutant shall be calculated separately. The manufacturer may, at its option, limit the deterioration factors used in the calculation of the manufacturer's minimum deterioration factors to those from all similar systems to the system being certified if sufficient data (i.e., from at least two certified systems) exists. All data eligible to be grouped as similar system data shall be used in calculating similar system deterioration factors. Any deterioration factors used in calculating similar system deterioration factors shall not be included in calculating the manufacturer's minimum deterioration factors used to certify any of the manufacturer's remaining vehicle systems.

(*3*) Manufacturers with aggregated sales from 301 through 9,999 motor vehicles and motor vehicle engines and certifying light-duty vehicle exhaust emissions from vehicles equipped with unproven emission control systems shall use deterioration factors that the manufacturer determines from official certification durability data generated by vehicles from engine families representing a minimum of 25 percent of the manufacturer's sales equipped with unproven emission control systems. The sales projections are to be based on total sales projected for each engine/system combination. The durability programs applicable to such manufacturers for this purpose shall be the Standard AMA, the Production AMA and the Alternative Service Accumulation Durability Programs of § 86.094–13. The durability data vehicle (engine) mileage accumulation and emission tests are to be conducted in accordance with § 86.094–13. The manufacturer must develop deterioration factors by generating durability data in accordance with § 86.094–13 on a minimum of 25 percent of the manufacturer's projected sales (by engine/system combination) that is equipped with unproven emission control systems. The manufacturer must complete the 25 percent durability requirement before the remainder of the manufacturer's sales equipped with unproven emission control systems is certified using manufacturer-determined assigned deterioration factors. Alternatively, any of these manufacturers may, at their option, accumulate miles on durability data vehicles and complete emission tests for the purpose of establishing their own deterioration factors on the remaining sales.

(*4*) For light-duty vehicle, light-duty truck, and heavy-duty vehicle evaporative emissions and for light-duty truck, and heavy-duty engine exhaust emissions, deterioration factors shall be determined in accordance with § 86.094–24.

(ii) Section 86.094–24(d) and (e) are not applicable.

(8) Section 86.094–25 is applicable to maintenance performed on durability data light-duty vehicles, light-duty trucks, heavy-duty vehicles, and heavy-duty engines when the manufacturer completes durability data vehicles or engines; § 86.087–38 is applicable to the recommended maintenance the manufacturer includes in the maintenance instructions furnished the purchasers of new motor vehicles and new motor vehicle engines under § 86.087–38.

(9)(i) Section 86.094–26 is applicable if the manufacturer completes durability data vehicles or engines.

(ii) Section 86.090–27 is applicable.

(10) Sections 86.094–28 and 86.091–29 are applicable.

(11)(i) Section 86.094–30 is applicable, except for § 86.094–30 (a)(2) and (b). In the place of § 86.094–30 (a)(2) and (b), small-volume manufacturers shall comply with paragraphs (c)(11) (ii) through (v) of this section.

(ii) Small-volume manufacturers shall submit an application for certification containing the elements contained in paragraphs (c)(11)(ii) (A) through (E) of this section.

(A) The names, addresses, and telephone numbers of the persons the manufacturer authorizes to communicate with us.

(B) A brief description of the vehicles (or engines) covered by the certificate

(the manufacturers' sales data book or advertising, including specifications, may satisfy this requirement for most manufacturers). The description shall include, as a minimum, the items listed in paragraphs (c)(11)(ii)(B) (*1*) through (*18*) of this section as applicable.

(*1*) Engine evaporative family names and vehicle (or engine) configurations.

(*2*) Vehicle carlines or engine models to be listed on the certificate of conformity.

(*3*) The test weight and horsepower setting for each vehicle or engine configuration.

(*4*) Projected sales.

(*5*) Combustion cycle.

(*6*) Cooling mechanism.

(*7*) Number of cylinders.

(*8*) Displacement.

(*9*) Fuel system type.

(*10*) Number of catalytic converters, type, volume, composition, surface area, and total precious metal loading.

(*11*) Method of air aspiration.

(*12*) Thermal reactor characteristics.

(*13*) Suppliers' and/or manufacturers' name and model number of any emission related items of the above, if purchased from a supplier who uses the items in its own certified vehicles(s) or engine(s).

(*14*) A list of emission component part numbers.

(*15*) Drawings, calibration curves, and descriptions of emission related components, including those components regulated under § 86.085–22(e), and schematics of hoses and other devices connecting these components.

(*16*) Vehicle adjustments or modifications necessary for light-duty trucks to assure that they conform to high-altitude standards.

(*17*) A description of the light-duty vehicles and light-duty trucks which are exempted from the high-altitude emission standards.

(*18*) Proof that the manufacturer has obtained or entered an agreement to purchase, when applicable, the insurance policy, required by § 85.1510(b) of this chapter. The manufacturer may submit a copy of the insurance policy or purchase agreement as proof that the manufacturer has obtained or entered an agreement to purchase the insurance policy.

(C) The results of all emission tests the manufacturer performs to demonstrate compliance with the applicable standards.

(D)(*1*) The following statement signed by the authorized representative of the manufacturer: ''The vehicles (or engines) described herein have been tested in accordance with (list of the applicable subparts A, B, D, I, M, N, or P) of part 86, title 40, Code of Federal Regulations, and on the basis of those tests are in conformance with that subpart. All of the data and records required by that subpart are on file and are available for inspection by the EPA Administrator. We project the total U.S. sales of vehicles (engines) subject to this subpart (including all vehicles and engines imported under the provisions of §§ 85.1505 and 85.1509 of this chapter to be fewer than 10,000 units.''

(*2*) A statement as required by and contained in paragraph (c)(5) of this section signed by the authorized representative of the manufacturer.

(*3*) A statement that the vehicles or engines described in the manufacturer's application for certification are not equipped with auxiliary emission control devices which can be classified as a defeat device as defined in § 86.094–2.

(*4*) A statement of compliance with section 206(a)(3) of the Clean Air Act (42 U.S.C. 7525(a)(3)).

(*5*) A statement that, based on the manufacturer's engineering evaluation and/or emission testing, the light-duty vehicles comply with emission standards at high altitude unless exempt under § 86.094–8(h).

(*6*) A statement that, based on the manufacturer's engineering evaluation and/or emission testing, the light-duty trucks sold for principle use at designated high-altitude locations comply with the high-altitude emission requirements and that all other light-duty trucks are at least capable of being modified to meet high-altitude standards unless exempt under § 86.094–9(g)(2).

(*7*) A statement affirming that the manufacturer will provide a list of emission and emission-related service parts, including part number designations and sources of parts, to the vehicle purchaser for all emission and

emission-related parts which might affect vehicle emission performance throughout the useful life of the vehicle. Secondly, it must state that qualified service facilities and emission-related repair parts will be conveniently available to serve its vehicles. In addition, if service facilities are not available at the point of sale or distribution, the manufacturer must indicate that the vehicle purchaser will be provided information identifying the closest authorized service facility to the point of sale, if in the United States, or the closest authorized service facility to the point of distribution to the ultimate purchaser if the vehicle was purchased outside of the United States by the ultimate purchaser. Such information should also be made available to the Administrator upon request.

(E) Manufacturers utilizing deterioration factors determined by the manufacturer based on its good engineering judgment (reference paragraph (c)(7)(i)(C)(*2*) of this section) shall provide a description of the method(s) used by the manufacturer to determine the deterioration factors.

(iii) If the manufacturer meets the requirements of this subpart, the Administrator will issue a certificate of conformity for the vehicles or engines described in the application for certification.

(iv) The certificate will be issued for such a period not to exceed one model year as the Administrator may determine and upon such terms as he may deem necessary to assure that any vehicle or engine covered by the certificate will meet the requirements of the Act and of this subpart.

(v)(A) If, after a review of the statements and descriptions submitted by the manufacturer, the Administrator determines that the manufacturer has not met the applicable requirements, the Administrator shall notify the manufacturer in writing of his intention to deny certification, setting forth the basis for his determination. The manufacturer may request a hearing on the Administrator's determination.

(B) If the manufacturer does not request a hearing or present the required information, the Administrator will deny certification.

(12) Sections 86.079–31 and 86.079–32 are not applicable.

(13) Under § 86.079–33, small-volume manufacturers are covered by paragraphs (c)(13) (i) and (ii) of this section.

(i) Small-volume manufacturers may make production changes (running changes) without receiving the Administrator's prior approval. The manufacturer shall assure (by conducting emission tests as it deems necessary) that the affected vehicles (engines) remain in compliance with the requirements of this part.

(ii) The manufacturer shall notify the Administrator within seven days after implementing any production related change (running change) that would affect vehicle emissions. This notification shall include any changes to the information required under paragraph (c)(11)(ii) of this section. The manufacturer shall also amend as necessary its records required under paragraph (c)(4) of this section to confirm with the production design change.

(14) Section 86.082–34 is not applicable.

(15) Sections 86.094–35, 86.079–36, 86.085–37, 86.087–38 and 86.079–39 are applicable.

[58 FR 4006, Jan. 12, 1993, as amended at 61 FR 127, Jan. 3, 1996]

§ 86.094–15 NO_X and particulate averaging, trading, and banking for heavy-duty engines.

(a)(1) Heavy-duty engines eligible for NO_X and particulate averaging, trading and banking programs are described in the applicable emission standards sections in this subpart. All heavy-duty engine families which include any engines labeled for use in clean-fuel vehicles as specified in 40 CFR part 88 are not eligible for these programs. Participation in these programs is voluntary.

(2)(i) Engine families with FELs exceeding the applicable standard shall obtain emission credits in a mass amount sufficient to address the shortfall. Credits may be obtained from averaging, trading, or banking, within the averaging set restrictions described in this section.

(ii) Engine families with FELs below the applicable standard will have emission credits available to average, trade,

bank or a combination thereof. Credits may not be used for averaging or trading to offset emissions that exceed an FEL. Credits may not be used to remedy an in-use nonconformity determined by a Selective Enforcement Audit or by recall testing. However, credits may be used to allow subsequent production of engines for the family in question if the manufacturer elects to recertify to a higher FEL.

(iii) Credits scheduled to expire in the earliest model year shall be used, prior to using other available credits, to offset emissions of engine families with FELs exceeding the applicable standard.

(b) Participation in the NO_X and/or particulate averaging, trading, and banking programs shall be done as follows.

(1) During certification, the manufacturer shall:

(i) Declare its intent to include specific engine families in the averaging, trading and/or banking programs. Separate declarations are required for each program and for each pollutant (*i.e.*, NO_X and particulate).

(ii) Declare an FEL for each engine family participating in one or more of these three programs.

(A) The FEL must be to the same level of significant digits as the emission standard (one-tenth of a gram per brake horsepower for NO_X emissions and one-hundredth of a gram per brake horsepower-hour for particulate emissions).

(B) In no case may the FEL exceed the upper limit prescribed in the section concerning the applicable heavy-duty engine NO_X and particulate emission standards.

(iii) Calculate the projected emission credits (+/−) based on quarterly production projections for each participating family and for each pollutant (NO_X and particulate), using the applicable equation in paragraph (c) of this section and the applicable factors for the specific engine family.

(iv)(A) Determine and state the source of the needed credits according to quarterly projected production for engine families requiring credits for certification.

(B) State where the quarterly projected credits will be applied for engine families generating credits.

(C) Credits may be obtained from or applied to only engine families within the same averaging set as described in paragraphs (d) and (e) of this section. Credits available for averaging, trading, or banking as defined in § 86.090–2, may be applied exclusively to a given engine family, or reserved as defined in § 86.091–2.

(2) Based on this information each manufacturer's certification application must demonstrate:

(i) That at the end of model year production, each engine family has a net emissions credit balance of zero or more using the methodology in paragraph (c) of this section with any credits obtained from averaging, trading or banking.

(ii) The source of the credits to be used to comply with the emission standard if the FEL exceeds the standard, or where credits will be applied if the FEL is less than the emission standard. In cases where credits are being obtained, each engine family involved must state specifically the source (manufacturer/engine family) of the credits being used. In cases where credits are being generated/supplied, each engine family involved must state specifically the designated use (manufacturer/engine family or reserved) of the credits involved. All such reports shall include all credits involved in averaging, trading or banking.

(3) During the model year manufacturers must:

(i) Monitor projected versus actual production to be certain that compliance with the emission standards is achieved at the end of the model year.

(ii) Provide the end-of-model year reports required under § 86.091–23.

(iii) For manufacturers participating in emission credit trading, maintain the quarterly records required under § 86.091–7(c)(8).

(4) Projected credits based on information supplied in the certification application may be used to obtain a certificate of conformity. However, any such credits may be revoked based on review of end-of-model year reports,

follow-up audits, and any other compliance measures deemed appropriate by the Administrator.

(5) Compliance under averaging, banking, and trading will be determined at the end of the model year. Engine families without an adequate amount of NO_X and/or particulate emission credits will violate the conditions of the certificate of conformity. The certificates of conformity may be voided *ab initio* for engine families exceeding the emission standard.

(6) If EPA or the manufacturer determines that a reporting error occurred on an end-of-year report previously submitted to EPA under this section, the manufacturer's credits and credit calculations will be recalculated. Erroneous positive credits will be void. Erroneous negative balances may be adjusted by EPA for retroactive use.

(i) If EPA review of a manufacturer's end-of-year report indicates a credit shortfall, the manufacturer will be permitted to purchase the necessary credits to bring the credit balance for that engine family to zero, at the ratio of 1.2 credits purchased for every credit needed to bring the balance to zero. If sufficient credits are not available to bring the credit balance for the engine family in question to zero, EPA may void the certificate for that engine family *ab initio.*

(ii) If within 180 days of receipt of the manufacturer's end-of-year report, EPA review determines a reporting error in the manufacturer's favor (i.e. resulting in a positive credit balance) or if the manufacturer discovers such an error within 180 days of EPA receipt of the end-of-year report, the credits will be restored for use by the manufacturer.

(c)(1) For each participating engine family, NO_X and particulate emission credits (positive or negative) are to be calculated according to one of the following equations and rounded, in accordance with ASTM E29–67, to the nearest one-tenth of a Megagram (Mg). Consistent units are to be used throughout the equation.

For determining credit need for all engine families and credit availability for engine families generating credits for averaging programs only:

$$\text{Emission credits} = (\text{Std FEL}) \times (\text{CF}) \times (\text{UL}) \times (\text{Production}) \times (10^{-6})$$

For determining credit availability for engine families generating credits for trading or banking programs:

$$\text{Emission credits} = (\text{Std FEL}) \times (\text{CF}) \times (\text{UL}) \times (\text{Production}) \times (10^{-6}) \times (0.8)$$

Where:

Std = the current and applicable heavy-duty engine NO_X or particulate emission standard in grams per brake horsepower hour or grams per Megajoule.

FEL = the NO_X or particulate family emission limit for the engine family in grams per brake horsepower-hour or grams per Megajoule.

CF = a transient cycle conversion factor in BHP-hr/mi or MJ/mi, as given in paragraph (c)(2) of this section.

UL = the useful life, or alternative life as described in paragraph (f) of § 86.090–21, for the given engine family in miles.

Production = the number of engines produced for U.S. sales within the given engine family during the model year. Quarterly production projections are used for initial certification. Actual production is used for end-of-year compliance determination.

0.8 = a one-time discount applied to all credits to be banked or traded within the model year generated. Banked credits traded in a subsequent model year will not be subject to an additional discount. Banked credits used in a subsequent model year's averaging program will not have the discount restored.

(2) The transient cycle conversion factor is the total (integrated) cycle brake horsepower- hour or Megajoules, divided by the equivalent mileage of the applicable transient cycle. For Otto-cycle-heavy duty engines, the equivalent mileage is 6.3 miles. For diesel heavy-duty engines, the equivalent mileage is 6.5 miles. When more than one configuration is chosen by EPA to be tested in the certification of an engine family (as described in § 86.085–24), the conversion factor used is to be based upon the configuration generating the highest conversion factor when determining credit need for a family and the lowest conversion factor when determining credit availability from a family for banking, trading and averaging.

(d) *Averaging sets for NO_x emission credits:* The averaging and trading of

NO_X emission credits will only be allowed between heavy-duty engine families in the same averaging set and in the same regional category. Engines produced for sale in California constitute a separate regional category than engines produced for sale in the other 49 states. Banking and trading are not applicable to engines sold in California. The averaging sets for the averaging and trading of NO_X emission credits for heavy-duty engines are defined as follows:

(1) For Otto-cycle heavy-duty engines:

(i) Otto-cycle heavy-duty engines constitute an averaging set. Averaging and trading among all Otto-cycle heavy-duty engine families is allowed. There are no subclass restrictions.

(ii) Gasoline-fueled heavy-duty vehicles certified under the provisions of § 86.085–1 (b) may not average or trade credits with gasoline fueled heavy-duty Otto-cycle engines, but may average or trade credits with light-duty trucks.

(2) For diesel cycle heavy-duty engines:

(i) Each of the three primary intended service classes for heavy-duty diesel engines, as defined in § 86.090–2, constitute an averaging set. Averaging and trading among all diesel-cycle engine families within the same primary service class is allowed.

(ii) Urban buses are treated as members of the primary intended service class where they otherwise would fall.

(e) *Averaging sets for particulate emission credits.* The averaging and trading of particulate emission credits will only be allowed between diesel cycle heavy-duty engine families in the same averaging set and in the same regional category. Engines produced for sale in California constitute a separate regional category than engines produced for sale in the other 49 states. Banking and trading are not applicable to engines sold in California. The averaging sets for the averaging and trading of particulate emission credits for diesel cycle heavy-duty engines are defined as follows:

(1) Engines intended for use in urban buses constitute a separate averaging set from all other heavy-duty engines. Averaging and trading between diesel cycle bus engine families is allowed.

(2) For heavy-duty engines, exclusive of urban bus engines, each of the three primary intended service classes for heavy-duty diesel cycle engines, as defined in § 86.090–2, constitute an averaging set. Averaging and trading between diesel-cycle engine families within the same primary service class is allowed.

(3) Otto cycle engines may not participate in particulate averaging, trading, or banking.

(f) Banking of NO_X and particulate emission credits:

(1) *Credit deposits.* (i) NO_X and particulate emission credits may be banked from engine families produced in any model year.

(ii) Manufacturers may bank credits only after the end of the model year and after actual credits have been reported to EPA in the end-of-year report. During the model year and before submittal of the end-of-year report, credits originally designated in the certification process for banking will be considered reserved and may be redesignated for trading or averaging.

(2) *Credit withdrawals.* (i) After being generated, banked credits shall be available for use within three model years following the model year in which they were generated. Credits not used within the period specified above shall be forfeited.

(ii) Manufacturers withdrawing banked emission credits shall indicate so during certification and in their credit reports, as described in § 86.091–23.

(3) *Use of banked emission credits.* The use of banked credits shall be within the averaging set and other restrictions described in paragraphs (d) and (e) of this section, and only for the following purposes:

(i) Banked credits may be used in averaging, or in trading, or in any combination thereof, during the certification period. Credits declared for banking from the previous model year but not reported to EPA may also be used. However, if EPA finds that the reported credits can not be proven, they will be revoked and unavailable for use.

(ii) Banked credits may not be used for NO_X or particulate averaging and trading to offset emissions that exceed an FEL. Banked credits may not be

used to remedy an in-use nonconformity determined by a Selective Enforcement Audit or by recall testing. However, banked credits may be used for subsequent production of the engine family if the manufacturer elects to recertify to a higher FEL.

(g)(1) The following paragraphs assume NO_X and particulate nonconformance penalties (NCPs) will be available for the 1991 and later model year HDEs.

(2) Engine families using NO_X and/or particulate NCPs but not involved in averaging:

(i) May not generate either NO_X or particulate credits for banking and trading.

(ii) May not use either NO_X or particulate credits from banking and trading.

(3) If a manufacturer has any engine family to which application of NCPs and banking and trading credits is desired, that family must be separated into two distinct families. One family, whose FEL equals the standard, must use NCPs only while the other, whose FEL does not equal the standard, must use credits only.

(4) If a manufacturer has any engine family in a given averaging set which is using NO_X and/or particulate NCPs, none of that manufacturer's engine families in that averaging set may generate credits for banking and trading.

(h) In the event of a negative credit balance in a trading situation, both the buyer and the seller would be liable.

(i) Certification fuel used for credit generation must be of a type that is both available in use and expected to be used by the engine purchaser. Therefore, upon request by the Administrator, the engine manufacturer must provide information acceptable to the Administrator that the designated fuel is readily available commercially and would be used in customer service.

[55 FR 30627, July 26, 1990, as amended at 59 FR 14110, Mar. 25, 1994; 59 FR 50073, Sept. 30, 1994]

§86.094–16 Prohibition of defeat devices.

(a) No new gasoline-fueled light-duty vehicle or light-duty truck shall be equipped with a defeat device.

(b) The Administrator may test or require testing on any vehicle at a designated location, using driving cycles and conditions which may reasonably be expected to be encountered in normal operation and use, for the purposes of investigating a potential defeat device.

(c) For cold temperature CO emission control, the Administrator will use a guideline to determine the appropriateness of the CO emission control at ambient temperatures between 25 °F (−4 °C) and 68 °F (20 °C). The guideline for CO emission congruity across the intermediate temperature range is the linear interpolation between the CO standard applicable at 25 °F (−4 °C) and the CO standard applicable at 68 °F (20 °C). For vehicles that exceed this CO emissions guideline upon intermediate temperature cold testing:

(1) If the CO emission level is greater than the 20 °F (−7 °C) emission standard, the vehicle will automatically be considered to be equipped with a defeat device without further investigation.

(2) If the CO emission level does not exceed the 20 °F emission standard, the Administrator may investigate the vehicle design for the presence of a defeat device under paragraph (d) of this section.

(d) For vehicle designs designated by the Administrator to be investigated for possible defeat devices:

(1) The manufacturer must show to the satisfaction of the Administrator that the vehicle design does not incorporate strategies that unnecessarily reduce emission control effectiveness exhibited during the Federal emissions test procedure when the vehicle is operated under conditions which may reasonably be expected to be encountered in normal operation and use.

(2) Information Submissions Required:

(i) The manufacturer will provide an explanation containing detailed information (including information which the Administrator may request to be submitted) regarding test programs, engineering evaluations, design specifications, calibrations, on-board computer algorithms, and design strategies incorporated for operation both during and outside of the Federal emission test procedure.

(ii) For purposes of investigations of possible cold temperature CO defeat devices under this paragraph (d), the

manufacturer shall provide an explanation which must show, to the satisfaction of the Administrator, that CO emissions are reasonably controlled in reference to the linear guideline, across the intermediate temperature range.

[57 FR 31900, July 17, 1992]

§ 86.094–17 Emission control diagnostic system for 1994 and later light-duty vehicles and light-duty trucks.

(a) All light-duty vehicles and light-duty trucks shall be equipped with an emission control diagnostic system capable of identifying, for each vehicle's useful life, the following types of deterioration or malfunction which could cause emission increases greater than or exceeding the following threshold levels as measured and calculated in accordance with test procedures set forth in subpart B of this part. Paragraphs (a)(2) and (a)(3) of this section do not apply to diesel cycle light-duty vehicles or light-duty trucks. Paragraphs (a)(1) through (a)(4) of this section do not apply to natural gas-fueled light-duty vehicles and light-duty trucks until the 1998 model year.

(1) Catalyst deterioration before it results in both an exhaust emission exceedance of 0.6 g/mi HC and an exhaust emission increase of 0.4 g/mi HC.

(2) Engine misfire before it results in an exhaust emission increase of greater than 0.4 g/mi HC, 3.4 g/mi CO, or 1.0 g/mi NO_X.

(3) Oxygen sensor deterioration before it results in an exhaust emission increase of greater than 0.2 g/mi HC, 1.7 g/mi CO, or 0.5 g/mi NO_X.

(4) Any other deterioration or malfunction within the powertrain which occurs in actual use and which results in an exhaust emission increase of greater than 0.2 g/mi HC, 1.7 g/mi CO, or 0.5 g/mi NO_X, or any vapor leak which results in an evaporative emissions increase of greater than 30.0 g/test measured over the first 24 hours of the diurnal portion of the revised evaporative emissions test procedure, in accordance with test procedures set forth in subpart B of this part, for vehicles certified to that test procedure.

(b)(1) The electronic evaporative emission purge control, if equipped, and all emission-related powertrain components connected to a computer shall, at a minimum, be monitored for circuit continuity. In lieu of monitoring circuit continuity, a functional system check may be performed provided the manufacturer can demonstrate that the functional check is equivalent or superior to the circuit continuity monitor. All components required by these regulations to be monitored shall be evaluated periodically, but no less frequently than once per Urban Dynamometer Driving Schedule as defined in appendix I, paragraph (a), of this part, or similar trip.

(2) For non-diesel cycle light-duty vehicles and light-duty trucks, the emission control diagnostic system shall at a minimum, monitor catalytic converters and oxygen sensors and shall detect misfiring cylinders.

(3) Oxygen sensor deterioration or malfunction which renders that sensor incapable of performing its function as part of the OBD system shall be identified on vehicles so equipped.

(c) The emission control diagnostic system shall incorporate a malfunction indicator light (MIL) readily visible to the vehicle operator. When illuminated, it shall display ''Check Engine,'' ''Service Engine Soon,'' or a similar phrase approved by the Administrator. A vehicle shall not be equipped with more than one general purpose malfunction indicator light for emission-related problems; separate specific purpose warning lights (e.g. brake system, fasten seat belt, oil pressure, etc.) are permitted. The use of red for the OBD-related malfunction indicator light is prohibited.

(d) The MIL shall illuminate and remain illuminated when any of the conditions specified in paragraphs (a) and (b) of this section are met, or whenever the engine control enters a default or secondary mode of operation. The MIL shall blink under any period of operation during which engine misfire is occurring at a level likely to cause catalyst damage as determined by the manufacturer. The MIL shall also illuminate when the vehicle's ignition is in the ''key-on'' position before engine starting or cranking and extinguish after engine starting if no malfunction has previously been detected. If a fuel

system or engine misfire malfunction has previously been detected, the MIL may be extinguished if the malfunction does not reoccur during three subsequent sequential trips during which engine speed is within 375 rpm, engine load is within 10 percent, and the engine's warm-up status is the same as that under which the malfunction was first detected, and no new malfunctions have been detected. If any malfunction other than a fuel system or engine misfire malfunction has been detected, the MIL may be extinguished if the malfunction does not reoccur during three subsequent sequential trips during which the monitoring system responsible for illuminating the MIL functions without detecting the malfunction, and no new malfunctions have been detected.

(e)(1) The emission control diagnostic system shall record code(s) indicating the status of the emission control system. Absent the presence of any fault codes, separate status codes shall be used to identify correctly functioning emission control systems and those emission control systems which need further vehicle operation to be fully evaluated. Fault codes shall be stored for deterioration or malfunction causing MIL illumination; the fault code shall identify the type of malfunction.

(2) For a single misfiring cylinder, the fault code(s) shall identify the cylinder, unless the manufacturer submits data and/or an engineering evaluation which adequately demonstrate that the misfiring cylinder cannot be reliably identified under certain operating conditions; multiple misfiring cylinders need not be uniquely identified if a distinct multiple misfire fault code is stored.

(3) A fault code shall be stored when the emission control system reverts to a default or secondary mode of operation.

(4) The diagnostic system may erase a fault code if the same fault is not reregistered in at least 40 engine warm-up cycles, and the malfunction indicator light (see paragraph (d) of this section) is not illuminated for that fault code.

(f) *Available Diagnostic Signals.* (1) Upon determination of the first malfunction of any component or system, ''freeze frame'' engine conditions present at the time shall be stored in computer memory. Should a subsequent fuel system or misfire malfunction occur, any previously stored freeze frame conditions shall be replaced by the fuel system or misfire conditions (whichever occurs first). Stored engine conditions shall include, but are not limited to: Engine speed, open or closed loop operation, fuel system commands, coolant temperature, calculated load value, fuel pressure, vehicle speed, air flow rate, and intake manifold pressure if the information needed to determine these conditions is available to the computer. For freeze frame storage, the manufacturer shall include the most appropriate set of conditions to facilitate effective repairs. If the fault code causing the conditions to be stored is erased in accordance with paragraph (c) of this section, the stored engine conditions may also be erased.

(2) The following signals in addition to the required freeze frame information shall be made available on demand through the serial port on the standardized data link connector, if the information is available to the on-board computer or can be determined using information available to the on-board computer: Diagnostic trouble codes, engine coolant temperature, fuel control system status (closed loop, open loop, other), fuel trim, ignition timing advance, intake air temperature, manifold air pressure, air flow rate, engine RPM, throttle position sensor output value, secondary air status (upstream, downstream, or atmosphere), calculated load value, vehicle speed, and fuel pressure. The signals shall be provided in standard units based on SAE specifications incorporated by reference in paragraph (h) of this section. Actual signals shall be clearly identified separately from default value or limp home signals. In addition, the capability to perform bi-directional diagnostic control based on SAE specifications shall be made available on demand through the serial port on the standardized data link connector per SAE specifications as referenced in paragraph (h) of this section.

(3) For all emission control components and systems for which specific

on-board evaluation tests are conducted (catalyst, oxygen sensor, etc.), the results of the most recent test performed by the vehicle, and the limits to which the system is compared shall be available through the data link per SAE J1979 specifications as referenced in paragraph (h) of this section beginning no later than the 1997 model year. The Administrator may allow a pass/fail indication for the most recent test results for those monitored components and systems for which such an indication is more appropriate (e.g., misfire detection, fuel system monitoring, etc.).

(4) The OBD requirements to which the vehicle is certified (i.e., California OBD II or Federal OBD), and the major emission control systems monitored by the OBD system consistent with paragraph (h)(3) of this section, shall be available through the serial data port on the standardized data link connector per SAE specifications as referenced in paragraph (h) of this section.

(g) The emission control diagnostic system is not required to evaluate components during malfunction conditions if such evaluation would result in a risk to safety or component failure.

(h) The emission control diagnostic system shall provide for standardized access and conform with the following Society of Automotive Engineers (SAE) standards. The following SAE documents are incorporated by reference. This incorporation by reference was approved by the Director of the Federal Register in accordance with 5 U.S.C. 552(a) and 1 CFR part 51. Copies of the SAE documents may be obtained from the Society of Automotive Engineers, Inc., 400 Commonwealth Drive, Warrendale, PA 15096–0001. Copies may be inspected at Docket No. A–90–35 at EPA's Air docket (LE–131), room 1500 M, 1st Floor, Waterside Mall, 401 M Street, SW., Washington, DC, or at the Office of the Federal Register, 800 North Capitol Street, NW., suite 700, Washington, DC.

(1) SAE J1850 ''Class B Data Communication Network Interface,'' (AUG91) shall be used as the on-board to off-board communications protocol. All emission related messages sent to the scan tool over a J1850 data link shall use the Cyclic Redundancy Check and the three byte header, and shall not use inter-byte separation or checksums.

(2) Basic diagnostic data (as specified in § 86.094–17(f)) shall be provided in the format and units in SAE J1979 ''E/E Diagnostic Test Modes,'' (DEC91). Basic bi-directional diagnostic capability shall be available and be consistent with SAE J1979 messages.

(3) Fault codes shall be consistent with SAE J2012 ''Recommended Format and Messages for Diagnostic Trouble Code Definitions,'' (MAR92) Part C.

(4) The connection interface between the OBD system and test equipment and diagnostic tools shall meet the functional requirements of SAE J1962 ''Diagnostic Connector,'' (JUN92).

(5) Limitation of Access—Any limitation of access to the diagnostic system shall be consistent with § 86.094–18. Access to vehicle calibration data, vehicle odometer, and keyless entry codes can be limited under the provisions of § 86.094.

(i) Upon application by the manufacturer, the Administrator may either waive the requirements of this section for specific components of any class or category of light-duty vehicles or light-duty trucks for model years 1994 or 1995 (or both), or through the 1999 model year, the Administrator may accept an OBD system as compliant even though specific requirements are not fully met. Such waivers or compliances without meeting specific requirements will be granted only if compliance would be infeasible or unreasonable considering such factors as, but not limited to, technical feasibility, lead time and production cycles including phase-in or phase-out of engines or vehicle designs and programmed upgrades of computers, and if any unmet requirements are not carried over from the previous model year except where unreasonable hardware modifications would be necessary to correct the noncompliance, and the manufacturer has demonstrated an acceptable level of effort toward compliance as determined by the Administrator. For alternate fueled vehicles (i.e. natural gas, liquefied petroleum gas, or methanol), beginning with the model year for which alternate fuel emission standards are

applicable and extending through the 1999 model year, manufacturers may request the Administrator to waive specific monitoring requirements of this section for which monitoring may not be reliable with respect to the use of the alternate fuel. At a minimum, all vehicles covered by this section, including those receiving a waiver as described in this paragraph, shall be equipped with an OBD system meeting either the California OBD I requirements, or some acceptable portion of the California OBD II or federal OBD requirements as specified in this section, except that for the 1994 and 1995 model years EPA may grant a waiver to a system less than OBD I giving consideration to such factors as manufacturer projections of very low sales volume for an engine family (e.g., 5000 or less), scheduled phase-out of significant engine technology with the 1994 or 1995 model years for that engine family, and whether or not the engine, or any similar engine within the manufacturer's product line, has ever been equipped with an OBD I or similar OBD system.

(j) Demonstration of compliance with California OBD II requirements (Title 13 California Code section 1968.1)as modified pursuant to California Mail Out #95–34 (September 26, 1995), shall satisfy the requirements of this section through the 1998 model year except that compliance with Title 13 California Code section 1968.1(d), pertaining to tampering protection, is not required to satisfy the requirements of this section.

[58 FR 9485, Feb. 19, 1993, as amended at 59 FR 48497, Sept. 21, 1994; 59 FR 15247, Mar. 23, 1995; 60 FR 37945, July 25, 1995; 60 FR 39266, Aug. 2, 1995; 61 FR 45903, Aug. 30, 1996; 63 FR 7719, Feb. 17, 1998]

§86.094–21 Application for certification.

(a) A separate application for a certificate of conformity shall be made for each set of standards (or family emission limits, as appropriate) and each class of new motor vehicles or new motor vehicle engines. Such application shall be made to the Administrator by the manufacturer and shall be updated and corrected by amendment.

(b) The application shall be in writing, signed by an authorized representative of the manufacturer, and shall include the following:

(1)(i) Identification and description of the vehicles (or engines) covered by the application and a description of their engine (vehicles only), emission control system, and fuel system components. This description will include:

(A) A detailed description of each Auxiliary Emission Control Device (AECD) to be installed in or on any vehicle (or engine) covered by the application;

(B) A detailed justification of each AECD (described in (b)(1)(i)(A) of this section) which results in a reduction in effectiveness of the emission control system. Such a justification may be disapproved by consideration of currently available technology, whereupon the application for certification may be disapproved under §86.094–22(b) for the incorporation of a defeat device;

(C) The manufacturer must submit a Statement of Compliance in the application for certification which attests to the fact that they have assured themselves that the engine family is designed to be within the intermediate temperature cold testing defeat device guidance as described in §86.094–16.

(*1*) This Statement of Compliance will be supported by a brief description of the vehicle's technological method of controlling CO emissions at intermediate temperatures.

(*2*) The manufacturer will determine a method (e.g., a test program, an engineering evaluation) which is adequate to support their Statement of Compliance. The manufacturer will support this Statement with a brief summary of the chosen method. Further details must be made available upon the Administrator's request.

(ii)(A) The manufacturer shall provide to the Administrator in the application for certification:

(*1*) A list of those parameters which are physically capable of being adjusted (including those adjustable parameters for which access is difficult) and that, if adjusted to settings other than the manufacturer's recommended setting, may affect emissions;

(*2*) A specification of the manufacturer's intended physically adjustable

range of each such parameter, and the production tolerances of the limits or stops used to establish the physically adjustable range;

(*3*) A description of the limits or stops used to establish the manufacturer's intended physically adjustable range of each adjustable parameter, or any other means used to inhibit adjustment;

(*4*) The nominal or recommended setting, and the associated production tolerances, for each such parameter.

(B) The manufacturer may provide, in the application for certification, information relating to why certain parameters are not expected to be adjusted in actual use and to why the physical limits or stops used to establish the physically adjustable range of each parameter, or any other means used to inhibit adjustment, are effective in preventing adjustment of parameters on in-use vehicles to settings outside the manufacturer's intended physically adjustable ranges. This may include results of any tests to determine the difficulty of gaining access to an adjustment or exceeding a limit as intended or recommended by the manufacturer.

(C) The Administrator may require to be provided detailed drawings and descriptions of the various emission related components, and/or hardware samples of such components, for the purpose of making his determination of which vehicle or engine parameter will be subject to adjustment for new certification and Selective Enforcement Audit testing and of the physically adjustable range for each such vehicle or engine parameter.

(2) Projected U.S. sales data sufficient to enable the Administrator to select a test fleet representative of the vehicles (or engines) for which certification is requested, and, for model year 1994 through 1995 light-duty vehicles and light light-duty trucks and model year 1996 heavy light-duty trucks, data sufficient to determine projected compliance with the Tier 1 standards implementation schedules of §§ 86.094–8 and 86.094–9. The data shall also include the altitude of intended sale for model year 1994 light-duty trucks certified to the Tier 0 standards of § 86.094–9. Volume projected to be produced for U.S. sale may be used in lieu of projected U.S. sales.

(3) A description of the test equipment and fuel proposed to be used.

(4)(i) For light-duty vehicles and light-duty trucks, a description of the test procedures to be used to establish the evaporative emission deterioration factors required to be determined and supplied in § 86.094–23(b)(2).

(ii) For heavy-duty vehicles equipped with gasoline-fueled or methanol-fueled engines, the Administrator does not assume that each evaporative emission family-evaporative emission control system combination will deteriorate in a unique manner during the useful life of the vehicle. The manufacturer shall therefore identify those evaporative emission deterioration factors which shall be applied to the various evaporative emission family-evaporative emission control system combinations which are expected to exhibit similar deterioration characteristics during the useful life of the vehicle.

(5)(i)(A) A description of the test procedures to be used to establish the durability data or the exhaust emission deterioration factors required to be determined and supplied in § 86.094–23(b)(1).

(B) For each light-duty truck engine family provided an optional useful life period under the provisions of paragraph (f) of this section, and for each heavy-duty engine family, a statement of the useful life.

(C) For engine families provided an alternative useful-life period under paragraph (f) of this section, a statement of that alternative period and a brief synopsis of the justification.

(ii) For heavy-duty diesel engine families, a statement of the primary intended service class (light, medium, or heavy) and an explanation as to why that service class was selected. Each diesel engine family shall be certified under one primary intended service class only. After reviewing the guidance in § 86.090–2, the class shall be determined on the basis of which class best represents the majority of the sales of that engine family.

(iii)(A) For each light-duty vehicle engine family, each light-duty truck

engine family, and each heavy-duty engine family, a statement of recommended maintenance and procedures necessary to assure that the vehicles (or engines) covered by a certificate of conformity in operation conform to the regulations, and a description of the program for training of personnel for such maintenance, and the equipment required.

(B) A description of vehicle adjustments or modifications necessary, if any, to assure that light-duty vehicles and light-duty trucks covered by a certificate of conformity conform to the regulations while being operated at any altitude locations, and a statement of the altitude at which the adjustments or modifications apply.

(iv) At the option of the manufacturer, the proposed composition of the emission data test fleet or (where applicable) the durability data test fleet.

(6) *Participation in averaging programs*—(i) *Particulate averaging.* (A) If the manufacturer elects to participate in the particulate averaging program for diesel light-duty vehicles and/or diesel light-duty trucks or the particulate averaging program for heavy-duty diesel engines, the application must list the family particulate emission limit and the projected U.S. production volume of the family for the model year.

(B) The manufacturer shall choose the level of the family particulate emission limits, accurate to hundredth of a gram per mile or hundredth of a gram per brake horsepowerhour for heavy-duty engines.

(C) The manufacturer may at any time during production elect to change the level of any family particulate emission limit(s) by submitting the new limit(s) to the Administrator and by demonstrating compliance with the limit(s) as described in §§ 86.090–2 and 86.094–28(b)(5)(i).

(ii) *NO_x averaging.* (A) If the manufacturer elects to participate in the NO_X averaging program for light-duty trucks or the NO_X averaging program for heavy-duty engines, the application must list the family NO_X emission limit and the projected U.S. production volume of the family for the model year.

(B) The manufacturer shall choose the level of the family NO_X emission limits, accurate to one-tenth of a gram per mile or to one-tenth of a gram per brake horsepower-hour for heavy-duty engines.

(C) The manufacturer may at any time during production elect to change the level of any family NO_X emission limit(s) by submitting the new limits to the Administrator and by demonstrating compliance with the limit(s) as described in §§ 86.088–2 and 86.094–28(b)(5)(ii).

(7)(i) For Otto-cycle heavy-duty engines, the application must state whether the engine family is being certified for use in all vehicles regardless of their Gross Vehicle Weight Rating (see § 86.091–10 (a)(1)(i) and (a)(3)(i)), or only for use in vehicles with a Gross Vehicle Weight Rating greater than 14,000 pounds.

(ii) If the engine family is being certified for use in all vehicles and is being certified to the emission standards applicable to Otto-cycle engines for use only in vehicles with a Gross Vehicle Weight Rating over 14,000 pounds under the provisions of § 86.091–10(a)(3), then the application must also attest that the engine family, together with all other engine families being certified under the provisions of § 86.091–10(a)(3), represent no more than 5 percent of model year sales of the manufacturer of all Otto-cycle heavy-duty engines for use in vehicles with Gross Vehicle Weight Ratings of up to 14,000 pounds.

(8) For each light-duty vehicle or light-duty truck engine family, the exhaust emission standards (or family emission limits, if applicable) to which the engine family is to be certified, and the corresponding exhaust emission standards (or family emission limits, if applicable) which the engine family must meet in-use.

(c) Complete copies of the application and of any amendments thereto, and all notifications under §§ 86.079–32, 86.079–33, and 86.082–34 shall be submitted in such multiple copies as the Administrator may require.

(d) Incomplete light-duty trucks shall have a maximum completed curb weight and maximum completed frontal area specified by the manufacturer.

(e) For vehicles equipped with gasoline-fueled or methanol-fueled heavy-duty engines, the manufacturer shall specify a maximum nominal fuel tank capacity for each evaporative emission family-evaporative emission control system combination.

(f) Light-duty truck and heavy-duty engine manufacturers who believe that the useful life periods of § 86.094–2 are significantly unrepresentative for one or more engine families (either too long or too short), may petition the Administrator to provide an alternative useful-life period. This petition must include the full rationale behind the request together with any supporting data and other evidence. Based on this or other information the Administrator may assign an alternative useful-life period. Any petition should be submitted in a timely manner, to allow adequate time for a thorough evaluation. For model year 1994 and later light-duty trucks not subject to the Tier 0 standards of § 86.094–9, alternative useful life periods will be granted only for THC, THCE, and idle CO requirements.

(g) The manufacturer shall identify those families which will not comply with cold temperature carbon monoxide standards.

(h) For each engine family incorporating an emission control diagnostic system, the manufacturer shall submit the following information:

(1) Detailed written information fully describing the functional operation characteristics of the diagnostic system.

(2) The general method of detecting malfunctions for each emission-related powertrain component.

(i) The manufacturer shall describe provisions taken to prevent tampering with emission control computer instructions.

(j) For methanol-fueled vehicles, the manufacturer shall specify:

(1) Whether the vehicle is a flexible fuel vehicle or a dedicated vehicle (manufacturers must obtain advance approval from the Administrator to classify methanol-fueled vehicles that can use gasoline as dedicated vehicles); and

(2) The fuel(s) (*i.e.*, the percent methanol) for which the vehicle was designed.

[58 FR 4009, Jan. 12, 1993, as amended at 58 FR 9487, Feb. 19, 1993, 60 FR 34335, June 30, 1995]

§ 86.094–22 Approval of application for certification; test fleet selections; determinations of parameters subject to adjustment for certification and Selective Enforcement Audit, adequacy of limits, and physically adjustable ranges.

(a) After a review of the application for certification and any other information which the Administrator may require, the Administrator may approve the application and select a test fleet in accordance with § 86.094–24.

(b) *Disapproval of application.* (1) The Administrator may disapprove in whole or in part an application for certification for reasons including incompleteness, inaccuracy, inappropriate proposed mileage (or service) accumulation procedures, test equipment, or fuel; or incorporation of defeat devices in vehicles (or on engines) described by the application.

(2) The issuance of a certificate of conformity does not exempt the covered vehicles from further evaluation or testing for defeat device purposes as described in § 86.094–16.

(c) Where any part of an application is rejected, the Administrator shall notify the manufacturer in writing and set forth the reasons for such rejection. Within 30 days following receipt of such notification, the manufacturer may request a hearing on the Administrator's determination. The request shall be in writing, signed by an authorized representative of the manufacturer and shall include a statement specifying the manufacturer's objections to the Administrator's determinations, and data in support of such objections. If, after the review of the request and supporting data, the Administrator finds that the request raises a substantial factual issue, he shall provide the manufacturer a hearing in accordance with § 86.078–6 with respect to such issue.

(d) *Approval of test procedures.* (1) The Administrator does not approve the test procedures for establishing the

evaporative emission deterioration factors for light-duty vehicles and light-duty trucks. The manufacturer shall submit the procedures as required in § 86.094–21(b)(4)(i) prior to the Administrator's selection of the test fleet under § 86.094–24(b)(1), and if such procedures will involve testing of durability data vehicles selected by the Administrator or elected by the manufacturer under § 86.094–24(c)(1), prior to initiation of such testing.

(2) *Light-duty trucks using the Standard Self-Approval durability Program and heavy-duty engines only.* The Administrator does not approve the test procedures for establishing exhaust emission deterioration factors for light-duty trucks using the Standard Self-Approval Durability Program described in § 86.094–13(f) nor for heavy-duty engines. The manufacturer shall submit these procedures and determinations as required in § 86.094–21(b)(5)(i) prior to determining the deterioration factors.

(3) Heavy-duty vehicles equipped with gasoline-fueled or methanol-fueled engines only. The Administrator does not approve the test procedures for establishing the evaporative emission deterioration factors. The test procedure will conform to the requirements in § 86.094–23(b)(3).

(e) *Parameter adjustment requirements.* When the Administrator selects emission data vehicles for the test fleet, he will at the same time determine those vehicle or engine parameters which will be subject to adjustment for certification, Selective Enforcement Audit and Production Compliance Audit testing, the adequacy of the limits, stops, seals, or other means used to inhibit adjustment, and the resulting physically adjustable ranges for each such parameter and will then notify the manufacturer of his determinations.

(1) *Determining parameters subject to adjustment.* (i) Except as noted in paragraph (e)(1)(iv) of this section, the Administrator may determine to be subject to adjustment the idle fuel-air mixture parameter on Otto-cycle vehicles (or engines) (carbureted or fuel-injected); the choke valve action parameter(s) on carbureted, Otto-cycle vehicles (or engines); or any parameter on any vehicle (or engine) (Otto-cycle or diesel) which is physically capable of being adjusted, may significantly affect emissions, and was not present on the manufacturer's vehicles (or engines) in the previous model year in the same form and function.

(ii) The Administrator may, in addition, determine to be subject to adjustment any other parameters on any vehicle or engine which is physically capable of being adjusted and which may significantly affect emissions. However, the Administrator may do so only if he has previously notified the manufacturer that he might do so and has found, at the time he gave this notice, that the intervening period would be adequate to permit the development and application of the requisite technology, giving appropriate consideration to the cost of compliance within such period. In no event will this notification be given later than September 1 of the calendar year two years prior to the model year.

(iii) In determining the parameters subject to adjustment, the Administrator will consider the likelihood that, for each of the parameters listed in paragraphs (e)(1) (i) and (ii) of this section, settings other than the manufacturer's recommended setting will occur on in-use vehicles (or engines). In determining likelihood, the Administrator may consider such factors as, but not limited to, information contained in the preliminary application, surveillance information from similar in-use vehicles (or engines), the difficulty and cost of gaining access to an adjustment, damage to the vehicle (or engine) if an attempt is made to gain such access and the need to replace parts following such attempt, and the effect of settings other than the manufacturer's recommended setting on vehicle (or engine) performance characteristics including emission characteristics.

(iv) Manual chokes of heavy-duty engines only will not be considered a parameter subject to adjustment under the parameter adjustment requirements.

(2)(i) The Administrator shall determine a parameter to be adequately inaccessible or sealed if:

(A) In the case of an idle mixture screw, the screw is recessed within the

carburetor casting and sealed with lead, thermosetting plastic, or an inverted elliptical spacer or sheared off after adjustment at the factory, and the inaccessibility is such that the screw cannot be accessed and/or adjusted with simple tools in one-half hour or for $20 (1978 dollars) or less;

(B) In the case of a choke bimetal spring, the plate covering the bimetal spring is riveted or welded in place, or held in place with nonreversible screws;

(C) In the case of a parameter which may be adjusted by elongating or bending adjustable members (e.g., the choke vacuum break), the elongation of the adjustable member is limited by design or, in the case of a bendable member, the member is constructed of a material which when bent would return to its original shape after the force is removed (plastic or spring steel materials);

(D) In the case of any parameter, the manufacturer demonstrates that adjusting the parameter to settings other than the manufacturer's recommended setting takes more than one-half hour or costs more than $20 (1978 dollars).

(ii) The Administrator shall determine a physical limit or stop to be an adequate restraint on adjustability if:

(A) In the case of a threaded adjustment, the threads are terminated, pinned, or crimped so as to prevent additional travel without breakage or need for repairs which take more than one-half hour or cost more than $20 (1978 dollars);

(B) The adjustment is ineffective at the end of the limits of travel regardless of additional forces or torques applied to the adjustment;

(C) The manufacturer demonstrates that travel or rotation limits cannot be exceeded with the use of simple and inexpensive tools (screwdriver, pliers, open-end or box wrenches, etc.) without incurring significant and costly damage to the vehicle (or engine) or control system or without taking more than one-half hour or costing more than $20 (1978 dollars).

(iii) If manufacturer service manuals or bulletins describe routine procedures for gaining access to a parameter or for removing or exceeding a physical limit, stop, seal or other means used to inhibit adjustment, or if surveillance data indicate that gaining access, removing, or exceeding is likely, paragraphs (e)(2)(i) and (ii) of this section shall not apply for that parameter.

(iv) In determining the adequacy of a physical limit, stop, seal, or other means used to inhibit adjustment of a parameter not covered by paragraph (e)(2)(i) or (ii) of this section, the Administrator will consider the likelihood that it will be circumvented, removed, or exceeded on in-use vehicles. In determining likelihood, the Administrator may consider such factors as, but not limited to, information contained in the preliminary application; surveillance information from similar in-use vehicles (or engines); the difficulty and cost of circumventing, removing, or exceeding the limit, stop, seal, or other means; damage to the vehicle (or engine) if an attempt is made to circumvent, remove, or exceed it and the need to replace parts following such attempt; and the effect of settings beyond the limit, stop, seal, or other means on vehicle (or engine) performance characteristics other than emission characteristics.

(3) The Administrator shall determine two physically adjustable ranges for each parameter subject to adjustment:

(i)(A) In the case of a parameter determined to be adequately inaccessible or sealed, the Administrator may include within the physically adjustable range applicable to testing under this subpart (certification testing) all settings within the production tolerance associated with the nominal setting for that parameter, as specified by the manufacturer in the preliminary application for certification; or

(B) In the case of other parameters, the Administrator shall include within this range all settings within physical limits or stops determined to be adequate restraints on adjustability. The Administrator may also include the production tolerances on the location of these limits or stops when determining the physically adjustable range.

(ii)(A) In the case of a parameter determined to be adequately inaccessible or sealed, the Administrator shall include within the physically adjustable

range applicable to testing under subparts G or K (Selective Enforcement Audit and Production Compliance Audit) only the actual settings to which the parameter is adjusted during production; or

(B) In the case of other parameters, the Administrator shall include within this range all settings within physical limits or stops determined to be adequate restraints on adjustability, as they are actually located on the test vehicle (or engine).

(f) *Submittal of advance information.* (1) If the manufacturer submits the information specified in §86.094–21(b)(1)(ii) in advance of its full preliminary application for certification, the Administrator shall review the information and make the determinations required in paragraph (e) of this section within 90 days of the manufacturer's submittal.

(2) The 90-day decision period is exclusive of the elapsed time during which EPA may request additional information from manufacturers regarding an adjustable parameter and the receipt of the manufacturers' response(s).

(g) Within 30 days following receipt of notification of the Administrator's determinations made under paragraph (e) of this section, the manufacturer may request a hearing on the Administrator's determinations. The request shall be in writing, signed by an authorized representative of the manufacturer, and shall include a statement specifying the manufacturer's objections to the Administrator's determinations, and data in support of such objections. If, after review of the request and supporting data, the Administrator finds that the request raises a substantial factual issue, he shall provide the manufacturer a hearing in accordance with §86.078–6 with respect to such issue.

[48 FR 4010, Jan. 12, 1993]

§86.094–23 Required data.

(a) The manufacturer shall perform the tests required by the applicable test procedures and submit to the Administrator the information described in paragraphs (b) through (l) of this section, provided, however, that if requested by the manufacturer, the Administrator may waive any requirement of this section for testing of vehicle (or engine) for which emission data are available or will be made available under the provisions of §86.091–29.

(b) *Durability data.* (1)(i) The manufacturer shall submit exhaust emission durability data on such light-duty vehicles tested in accordance with applicable test procedures and in such numbers as specified, which will show the performance of the systems installed on or incorporated in the vehicle for extended mileage, as well as a record of all pertinent maintenance performed on the test vehicles.

(ii) The manufacturer shall submit exhaust emission deterioration factors for light-duty trucks and heavy-duty engines and all test data that are derived from the testing described under §86.094–21(b)(5)(i)(A), as well as a record of all pertinent maintenance. Such testing shall be designed and conducted in accordance with good engineering practice to assure that the engines covered by a certificate issued under §86.094–30 will meet each emission standard (or family emission limit, as appropriate) in §86.094–9, §86.091–10, or §86.094–11 as appropriate, in actual use for the useful life applicable to that standard.

(2) For light-duty vehicles and light-duty trucks, the manufacturer shall submit evaporative emission deterioration factors for each evaporative emission family-evaporative emission control system combination and all test data that are derived from testing described under §86.094–21(b)(4)(i) designed and conducted in accordance with good engineering practice to assure that the vehicles covered by a certificate issued under §86.094–30 will meet the evaporative emission standards in §86.094–8 or §86.094–9, as appropriate, for the useful life of the vehicle.

(3) For heavy-duty vehicles equipped with gasoline-fueled, natural gas-fueled, liquefied petroleum gas-fueled or methanol-fueled engines, evaporative emission deterioration factors for each evaporative emission family-evaporative emission control system combination identified in accordance with §86.091–21(b)(4)(ii). Furthermore, a statement that the test procedure(s) used to derive the deterioration factors includes, but need not be limited to, a

consideration of the ambient effects of ozone and temperature fluctuations and the service accumulation effects of vibration, time, vapor saturation and purge cycling. The deterioration factor test procedure shall be designed and conducted in accordance with good engineering practice to assure that the vehicles covered by a certificate issued under § 86.091–30 will meet the evaporative emission standards in § 86.091–10 and § 86.091–11 in actual use for the useful life of the engine. Furthermore, a statement that a description of the test procedure, as well as all data, analyses and evaluations, is available to the Administrator upon request.

(4)(i) For heavy-duty vehicles with a Gross Vehicle Weight Rating of up to 26,000 pounds and equipped with gasoline-fueled, natural gas-fueled, liquefied petroleum gas-fueled or methanol-fueled engines, a written statement to the Administrator certifying that the manufacturer's vehicles meet the standards of § 86.091–10 or § 86.091–11 (as applicable) as determined by the provisions of § 86.091–28. Furthermore, a written statement to the Administrator that all data, analyses, test procedures, evaluations and other documents, on which the above statement is based, are available to the Administrator upon request.

(ii) For heavy-duty vehicles with a Gross Vehicle Weight Rating of greater than 26,000 pounds and equipped with gasoline-fueled, natural gas-fueled, liquefied petroleum gas-fueled or methanol-fueled engines, a written statement to the Administrator certifying that the manufacturer's evaporative emission control systems are designed, using good engineering practice, to meet the standards of § 86.091–10 or § 86.091–11 (as applicable) as determined by the provisions of § 86.091–28. Furthermore, a written statement to the Administrator that all data, analyses, test procedures, evaluations and other documents, on which the above statement is based, are available to the Administrator upon request.

(c) *Emission data.* (1) Emission data, including in the case of methanol fuel, methanol, formaldehyde and total hydrocarbon equivalent, exhaust methane data in the case of vehicles meeting a non-methane hydrocarbon standard on such vehicles tested in accordance with applicable test procedures and in such numbers as specified. These data shall include zero-mile data, if generated, and emission data generated for certification as required under § 86.090–26(a)(3)(i) or § 86.090–26(a)(3)(ii). In lieu of providing emission data the Administrator may, on request of the manufacturer, allow the manufacturer to demonstrate (on the basis of previous emission tests, development tests or other information) that the engine will conform with certain applicable emission standards of § 86.094–8 or § 86.094–9. Standards eligible for such manufacturer requests are those for idle CO emissions, smoke emissions, or particulate emissions from methanol-fueled, natural gas-fueled and liquefied petroleum gas-fueled diesel-cycle certification vehicles, on evaporative emissions or refueling emissions from natural gas-fueled or liquefied petroleum gas-fueled vehicles (light-duty and heavy-duty), and those for particulate emissions from model year 1994 and later gasoline-fueled, methanol-fueled, natural gas-fueled or liquefied petroleum gas-fueled Otto-cycle certification vehicles that are not certified to the Tier 0 standards of § 86.094–9 (a)(1)(i), (a)(1)(ii), or § 86.094–8(a)(1)(i). Also eligible for such requests are standards for total hydrocarbon emissions from model year 1994 and later certification vehicles that are not certified to the Tier 0 standards of § 86.094–9 (a)(1)(i), (a)(1)(ii) or § 86.094–8(a)(1)(i). By separate request, including appropriate supporting test data, the manufacturer may request that the Administrator also waive the requirement to measure particulate emissions when conducting Selective Enforcement Audit testing of Otto-cycle vehicles, or the requirement to measure evaporative emissions when conducting Selective Enforcement Audit testing of natural gas or liquefied petroleum gas-fueled vehicles.

(2) *Certification engines.* (i) Emission data on such engines tested in accordance with applicable emission test procedures of this subpart and in such numbers as specified. These data shall include zero-hour data, if generated, and emission data generated for certification as required under § 86.090–

26(c)(4). In lieu of providing emission data on idle CO emissions, smoke emissions or particulate emissions from methanol-fueled, natural gas-fueled or liquefied petroleum gas-fueled diesel certification engines, or on CO emissions from petroleum-fueled, natural gas-fueled, liquefied petroleum gas-fueled, or methanol-fueled diesel certification engines the Administrator may, on request of the manufacturer, allow the manufacturer to demonstrate (on the basis of previous emission tests, development tests or other information) that the engine will conform with the applicable emission standards of § 86.091–11, or § 86.094–11.

(ii) For heavy-duty diesel engines, a manufacturer may submit hot-start data only, in accordance with subpart N of this part, when making application for certification. However, for conformity Selective Enforcement Audit and recall testing by the Agency, both the cold-start and hot-start test data, as specified in subpart N of this part, will be included in the official results.

(d) The manufacturer shall submit a statement that the vehicles (or engines) for which certification is requested conform to the requirements in § 86.084–5(b), and that the descriptions of tests performed to ascertain compliance with the general standards in § 86.084–5(b), and that the data derived from such tests are available to the Administrator upon request.

(e)(1) The manufacturer shall submit a statement that the test vehicles (or test engines) for which data are submitted to demonstrate compliance with the applicable standards (or family emission limits, as appropriate) of this subpart are in all material respects as described in the manufacturer's application for certification, that they have been tested in accordance with the applicable test procedures utilizing the fuels and equipment described in the application for certification, and that on the basis of such tests the vehicles (or engines) conform to the requirements of this part. If such statements cannot be made with respect to any vehicle (or engine) tested, the vehicle (or engine) shall be identified, and all pertinent data relating thereto shall be supplied to the Administrator. If, on the basis of the data supplied and any additional data as required by the Administrator, the Administrator determines that the test vehicles (or test engine) was not as described in the application for certification or was not tested in accordance with the applicable test procedures utilizing the fuels and equipment as described in the application for certification, the Administrator may make the determination that the vehicle (or engine) does not meet the applicable standards (or family emission limits, as appropriate). The provisions of § 86.094–30(b) shall then be followed.

(2) For evaporative emission durability, or light-duty truck or heavy-duty engine exhaust emission durability, the manufacturer shall submit a statement of compliance with paragraph (b)(1)(ii), (b)(2), or (b)(3) of this section, as applicable.

(f) Additionally, manufacturers participating in the particulate averaging program for diesel light-duty vehicles and diesel light-duty trucks shall submit:

(1) In the application for certification, a statement that the vehicles for which certification is requested will not, to the best of the manufacturer's belief, when included in the manufacturer's production-weighted average emission level, cause the applicable particulate standard(s) to be exceeded; and

(2) No longer than 90 days after the end of a given model year of production of engine families included in one of the diesel particulate averaging programs, the number of vehicles produced in each engine family at each certified particulate FEL, along with the resulting production-weighted average particulate emission level.

(g) Additionally, manufacturers participating in the NO_X averaging program for light-duty trucks shall submit:

(1) In the application for certification, a statement that the vehicles for which certification is required will not, to the best of the manufacturer's belief, when included in the manufacturer's production-weighted average emission level, cause the applicable NO_X standard(s) to be exceeded; and

(2) No longer than 90 days after the end of a given model year of production

of engine families included in the NO_X averaging program, the number of vehicles produced in each engine family at each certified NO_X emission level.

(h) Additionally, manufacturers participating in any of the NO_X and/or particulate averaging, trading, or banking programs for heavy-duty engines shall submit for each participating family the items listed in paragraphs (h)(1) through (3) of this section.

(1) *Application for certification.* (i) The application for certification will include a statement that the engines for which certification is requested will not, to the best of the manufacturer's belief, when included in any of the averaging, trading, or banking programs cause the applicable NO_X or particulate standard(s) to be exceeded.

(ii) The application for certification will also include the type (NO_X or particulate) and the projected number of credits generated/needed for this family, the applicable averaging set, the projected U.S. (49-state) production volumes, by quarter, NCPs in use on a similar family and the values required to calculate credits as given in § 86.094–15. Manufacturers shall also submit how and where credit surpluses are to be dispersed and how and through what means credit deficits are to be met, as explained in § 86.094–15. The application must project that each engine family will be in compliance with the applicable NO_X and/or particulate emission standards based on the engine mass emissions, and credits from averaging, trading and banking.

(2) [Reserved]

(3) *End-of-year report.* The manufacturer shall submit end-of-year reports for each engine family participating in any of the averaging, trading, or banking programs, as described in paragraphs (h)(3) (i) through (iv) of this section.

(i) These reports shall be submitted within 90 days of the end of the model year to: Director, Manufacturers Operations Division (EN–340F), U.S. Environmental Protection Agency, 401 M Street, SW., Washington, DC 20460.

(ii) These reports shall indicate the engine family, the averaging set, the actual U.S. (49-state) production volume, the values required to calculate credits as given in § 86.094–15, the resulting type (NO_X or particulate) and number of credits generated/required, and the NCPs in use on a similar NCP family. Manufacturers shall also submit how and where credit surpluses were dispersed (or are to be banked) and how and through what means credit deficits were met. Copies of contracts related to credit trading must also be included or supplied by the broker if applicable. The report shall also include a calculation of credit balances to show that net mass emissions balances are within those allowed by the emission standards (equal to or greater than a zero credit balance). The credit discount factor described in § 86.094–15 must be included as required.

(iii) The 49-state production counts for end-of-year reports shall be based on the location of the first point of retail sale (e.g., customer, dealer, secondary manufacturer) by the manufacturer.

(iv) Errors discovered by EPA or the manufacturer in the end-of-year report, including changes in the 49 state production counts, may be corrected up to 180 days subsequent to submission of the end-of-year report. Errors discovered by EPA after 180 days shall be corrected if credits are reduced. Errors in the manufacturer's favor will not be corrected if discovered after the 180 day correction period allowed.

(i) Failure by a manufacturer participating in the averaging, trading, or banking programs to submit any quarterly or end-of-year report (as applicable) in the specified time for all vehicles and engines that are part of an averaging set is a violation of section 203(a)(1) of the Clean Air Act (42 U.S.C. 7522(a)(1)) for each such vehicle and engine.

(j) Failure by a manufacturer generating credits for deposit only in either the HDE NO_X or particulate banking programs to submit their end-of-year reports in the applicable specified time period (i.e., 90 days after the end of the model year) shall result in the credits not being available for use until such reports are received and reviewed by EPA. Use of projected credits pending EPA review will not be permitted in these circumstances.

(k) Engine families certified using NCPs are not required to meet the requirements outlined in paragraphs (f) through (j) of this section.

(l) Additionally, manufacturers certifying vehicles shall submit for each model year 1994 through 1997 light-duty vehicle and light light-duty truck engine family and each model year 1996 through 1998 heavy light-duty truck engine family the information listed in paragraphs (l) (1) and (2) of this section.

(1) *Application for certification.* In the application for certification, the manufacturer shall submit the projected sales volume of engine families certifying to the respective standards, and the in-use standards that each engine family will meet. Volume projected to be produced for U.S. sale may be used in lieu of projected U.S. sales.

(2) *End-of-year reports for each engine family.* (i) These end-of-year reports shall be submitted within 90 days of the end of the model year to: Director, Manufacturers Operations Division (EN–340F), U.S. Environmental Protection Agency, 401 M Street, SW., Washington, DC 20460.

(ii) These reports shall indicate the model year, engine family, and the actual U.S. sales volume. The manufacturer may petition the Administrator to allow volume produced for U.S.. sale to be used in lieu of U.S. sales. Such petition shall be submitted within 30 days of the end of the model year to the Manufacturers Operations Division. For the petition to be granted, the manufacturer must establish to the satisfaction of the Administrator that production volume is functionally equivalent to sales volume.

(iii) The U.S. sales volume for end-of-year reports shall be based on the location of the point of sale to a dealer, distributor, fleet operator, broker, or any other entity which comprises the point of first sale.

(iv) Failure by a manufacturer to submit the end-of-year report within the specified time may result in certificate(s) for the engine family(ies) certified to Tier 0 certification standards being voided ab initio plus any applicable civil penalties for failure to submit the required information to the Agency.

(v) The information shall be organized in such a way as to allow the Administrator to determine compliance with the Tier l standards implementation schedules of §§86.094–8 and 86.094–9, and the Tier 1 and Tier 1_I implementation schedules of §§86.708–94 and 86.709–94.

[58 FR 4012, Jan. 12, 1993, as amended at 58 FR 33208, June 16, 1993; 58 FR 66294, Dec. 20, 1993; 59 FR 14110, Mar. 25, 1994; 59 FR 48498, Sept. 21, 1994]

§86.094–24 Test vehicles and engines.

(a) *General.* Paragraph (a) of this section applies to the grouping of vehicles or engines into families.

(1) The vehicles or engines covered by an application for certification will be divided into groupings of engines which are expected to have similar emission characteristics throughout their useful life. Each group of engines with similar emission characteristics shall be defined as a separate engine family.

(2) To be classed in the same engine family, engines must be identical in all the respects listed in paragraphs (a)(2)(i) through (x) of this section.

(i) The cylinder bore center-to-center dimensions.

(ii)–(iii) [Reserved]

(iv) The cylinder block configuration (air-cooled or water-cooled: L–6, 90 deg., V–8, etc.).

(v) The location of the intake and exhaust valves (or ports).

(vi) The method of air aspiration.

(vii) The combustion cycle.

(viii) Catalytic converter characteristics.

(ix) Thermal reactor characteristics.

(x) Type of air inlet cooler (e.g., intercoolers and after-coolers) for diesel heavy-duty engines.

(3)(i) Engines identical in all the respects listed in paragraph (a)(2) of this section may be further divided into different engine families if the Administrator determines that they may be expected to have different emission characteristics. This determination will be based upon a consideration of the features of each engine listed in paragraphs (a)(3)(i) (A) through (G) of this section.

(A) The bore and stroke.

(B) The surface-to-volume ratio of the nominally dimensioned cylinder at the top dead center positions.

(C) The intake manifold induction port sizes and configuration.

(D) The exhaust manifold port size and configuration.

(E) The intake and exhaust valve sizes.

(F) The fuel system.

(G) The camshaft timing and ignition or injection timing characteristics.

(ii) Light-duty trucks and heavy-duty engines produced in different model years and distinguishable in the respects listed in paragraph (a)(2) of this section shall be treated as belonging to a single engine family if the Administrator requires it, after determining that the engines may be expected to have similar emission deterioration characteristics.

(iii) Engines identical in all of the respects listed in paragraphs (a)(2) and (a)(3)(i) of this section may be further divided into different engine families if some of the engines are expected to be sold as clean-fuel vehicles under 40 CFR part 88, and if the manufacturer chooses to certify the engines to both the clean-fuel vehicle standards of 40 CFR part 88 and the general standards of this part 86. One engine family shall include engines that are intended for general use. For this engine family, only the provisions of this part 86 shall apply. The second engine family shall include all engines that are intended to be used in clean-fuel vehicles. For this engine family, the provisions of both this part 86 and 40 CFR part 88 shall apply. The manufacturer may submit one set of data to certify both engine families.

(4) Where engines are of a type which cannot be divided into engine families based upon the criteria listed in paragraphs (a)(2) and (a)(3) of this section, the Administrator will establish families for those engines based upon those features most related to their emission characteristics. Engines that are eligible to be included in the same engine family based on the criteria in paragraphs (a)(2) and (a)(3)(i) of this section may be further divided into different engine families if the manufacturer determines that they may be expected to have different emission characteristics, or if the manufacturer chooses to certify the engines to both the clean-fuel vehicle standards of 40 CFR part 88 and the general standards of this part 86 as described in paragraph (a)(3)(iii) of this section. The determination of the emission characteristics will be based upon a consideration of the following features of each engine:

(i) The dimension from the center line of the crankshaft to the center line of the camshaft.

(ii) The dimension from the center line of the crankshaft to the top of the cylinder block head face.

(iii) The size of the intake and exhaust valves (or ports).

(5) Light-duty vehicles and light-duty trucks covered by an application for certification will be divided into groupings (e.g., by fuel type) which are expected to have similar evaporative emission characteristics throughout their useful life. Each group of vehicles with similar evaporative emission characteristics shall be defined as a separate evaporative emission family.

(6) For light-duty vehicles and light-duty trucks to be classed in the same evaporative emission family, vehicles must be similar with respect to:

(i) Type of vapor storage device (e.g., canister, air cleaner, crankcase).

(ii) Basic canister design.

(iii) Fuel system.

(iv) Fuel type.

(7) Where vehicles are of a type which cannot be divided into evaporative emission families based on the criteria listed in paragraph (a)(2) of this section, the Administrator will establish families for those vehicles based upon the features most related to their evaporative emission characteristics.

(8)(i) If the manufacturer elects to participate in the Production AMA Durability Program, the engine families covered by an application for certification shall be grouped based upon similar engine design and emission control system characteristics. Each of these groups shall constitute a separate engine family group.

(ii) To be classed in the same engine family group, engine families must contain engines identical in all of the respects listed in paragraphs (a)(8)(ii)(A) through (D) of this section.

(A) The combustion cycle.

(B) The cylinder block configuration (air-cooled or water-cooled: L–6, V–8, rotary, etc.).

(C) Displacement (engines of different displacement within 50 cubic inches or 15 percent of the largest displacement and contained within a multidisplacement engine family will be included in the same engine family group).

(D) Catalytic converter usage and basic type (noncatalyst, oxidation catalyst only, three-way catalyst equipped).

(9) Engine families identical in all respects listed in paragraph (a)(8) of this section may be further divided into different engine family groups if the Administrator determines that they are expected to have significantly different exhaust emission control system deterioration characteristics.

(10) A manufacturer may request the Administrator to include in an engine family group engine families in addition to those grouped under the provisions of paragraph (a)(8) of this section. This request must be accompanied by information the manufacturer believes supports the inclusion of these additional engine families.

(11) A manufacturer may combine into a single engine family group those light-duty vehicle and light-duty truck engine families which otherwise meet the requirements of paragraphs (a) (8) through (10) of this section.

(12) Vehicles powered by heavy-duty engines covered by an application for certification and using fuels for which there is an applicable evaporative emission standard will be divided into groupings of vehicles on the basis of physical features, including fuel type, which are expected to affect evaporative emissions. Each group of vehicles with similar features shall be defined as a separate evaporative emission family.

(13) For vehicles equipped with heavy-duty engines using fuels for which there are applicable evaporative emission standards to be classed in the same evaporative emission family, vehicles must be identical with respect to:

(i) Method of fuel/air metering (i.e., carburetion versus fuel injection).

(ii) Carburetor bowl fuel volume, within a 10 cc range.

(iii) Fuel type.

(14) For vehicles equipped with heavy-duty engines using fuels for which there are applicable evaporative emission standards to be classed in the same evaporative emission control system family, vehicles must be identical with respect to:

(i) Method of vapor storage.

(ii) Method of carburetor sealing.

(iii) Method of air cleaner sealing.

(iv) Vapor storage working capacity, within a 20g range.

(v) Number of storage devices.

(vi) Method of purging stored vapors.

(vii) Method of venting the carburetor during both engine off and engine operation.

(viii) Liquid fuel hose material.

(ix) Vapor storage material.

(15) Where vehicles equipped with heavy-duty engines using fuels for which there are applicable evaporative emission standards and which cannot be divided into evaporative emission family-control system combinations based on the criteria listed above, the Administrator will establish evaporative emission family-control system combinations for those vehicles based on features most related to their evaporative emission characteristics.

(b) *Emission data*—(1) *Light-duty vehicles and light-duty trucks.* Paragraph (b)(1) of this section applies to light-duty vehicle and light-duty truck emission data vehicles.

(i) Vehicles will be chosen to be operated and tested for emission data based upon engine family groupings. Within each engine family, one test vehicle will be selected based on the criterion that the Administrator shall select the vehicle with the heaviest equivalent test weight (including options) within the family. If more than one vehicle meets this criterion, then within that vehicle grouping the Administrator shall select, in the order listed, the highest road-load power, largest displacement, the transmission with the highest numerical final gear ratio (including overdrive), the highest numerical axle ratio offered in that engine family, and the maximum fuel flow calibration

(ii) The Administrator shall select one additional test vehicle from within each engine family. The additional vehicle selected shall be the vehicle expected to exhibit the highest emissions of those vehicles remaining in the engine family. If all vehicles within the engine family are similar the Administrator may waive the requirements of this paragraph.

(iii) Within an engine family and exhaust emission control system, the manufacturer may alter any emission data vehicle (or other vehicles such as current or previous model year emission data vehicles, fuel economy data vehicles, and development vehicles provided they meet emission data vehicles' protocol) to represent more than one selection under paragraph (b)(1) (i), (ii), (iv), or (vii) of this section.

(iv) If the vehicles selected in accordance with paragraphs (b)(1) (i) and (ii) of this section do not represent each engine-system combination, then one vehicle of each engine-system combination not represented will be selected by the Administrator. The vehicle selected shall be the vehicle expected to exhibit the highest emissions of those vehicles remaining in the engine family.

(v) For high-altitude exhaust emission compliance for each engine family, the manufacturer shall follow one of the procedures described in paragraphs (b)(1)(v) (A) and (B) of this section.

(A) The manufacturer will select for testing under high-altitude conditions the vehicle expected to exhibit the highest emissions from the nonexempt vehicles selected in accordance with paragraphs (b)(1) (ii), (iii), and (iv) of this section; or

(B) In lieu of testing vehicles according to paragraph (b)(1)(v)(A) of this section, a manufacturer may provide a statement in its application for certification, based on the manufacturer's engineering evaluation of such high altitude emission testing as the manufacturer deems appropriate,

(*1*) That all light-duty vehicles not exempt under § 86.094–8(h) comply with the emission standards at high altitude; and

(*2*) That light-duty trucks sold for principal use at designated high-altitude locations comply with the high-altitude emission requirements and that all light-duty trucks sold at low altitude, which are not exempt under § 86.094–9(h), are capable of being modified to meet high-altitude standards.

(vi) If 90 percent or more of the engine family sales will be in California, a manufacturer may substitute emission data vehicles selected by the California Air Resources Board criteria for the selections specified in paragraphs (b)(1) (i), (ii), and (iv) of this section.

(vii) Vehicles will be chosen to be operated and tested for evaporative emission data based upon evaporative emission family groupings as defined in paragraphs (a) (12) through (15) of this section.

(A) Vehicles of each evaporative emission family will be divided into evaporative emission control systems.

(B) The Administrator will select the vehicle expected to exhibit the highest evaporative emissions from within each evaporative family to be certified. This vehicle is selected from among the vehicles represented by the exhaust emission data selections for the engine family, unless evaporative testing has already been completed for the vehicle expected to exhibit the highest evaporative emissions for the evaporative family as part of another engine family's testing.

(C) If the vehicles selected in accordance with paragraph (b)(1)(vii)(B) of this section do not represent each evaporative emission control system then the Administrator will select the highest expected evaporative emission vehicle from within the unrepresented evaporative system.

(viii) For high-altitude evaporative emission compliance for each evaporative emission family, the manufacturer shall follow one of the procedures described in paragraphs (b)(1)(viii) (A) and (B) of this section.

(A) The manufacturer will select for testing under high-altitude conditions the one nonexempt vehicle previously selected under paragraph (b)(1)(vii) (B) or (C) of this section which is expected to have the highest level of evaporative emissions when operated at high altitude; or

(B) In lieu of testing vehicles according to paragraph (b)(1)(viii)(A) of this

section, a manufacturer may provide a statement in its application for certification, based on the manufacturer's engineering evaluation of such high-altitude emission testing as the manufacturer deems appropriate,

(*1*) That all light-duty vehicles not exempt under § 86.094–8(h) comply with the emission standards at high altitude; and

(*2*) That light-duty trucks sold for principal use at designated high-altitude locations comply with the high-altitude emission requirements and that all light-duty trucks sold at low-altitude, which are not exempt under § 86.094–9(h), are capable of being modified to meet high-altitude standards.

(ix) Vehicles selected for high altitude exhaust emission testing under paragraph (b)(1)(v)(A) of this section may be used to satisfy the evaporative emission testing requirements of paragraph (b)(1) (viii) (A) of this section.

(x) *Light-duty trucks only.* (A) The manufacturer may reconfigure any of the low-altitude emission data vehicles to represent the vehicle configuration required to be tested at high altitude.

(B) The manufacturer is not required to test the reconfigured vehicle at low altitude.

(xi) For cold temperature CO exhaust emission compliance for each engine family, the Administrator will select for testing the vehicle expected to emit the highest emissions from the vehicles selected in accordance with paragraphs (b)(1) (i), (ii), (iii), and (iv) of this section. This vehicle shall be tested by the manufacturer in accordance with the test procedures in subpart C of this part or with alternative procedures requested by the manufacturer and approved in advance by the Administrator.

(2) *Otto-cycle heavy-duty emission data engines.* Paragraph (b)(2) of this section applies to Otto-cycle heavy-duty engines.

(i)–(ii) [Reserved]

(iii) The Administrator shall select a maximum of two engines within each engine family based upon features indicating that they may have the highest emission levels of the engines in the engine family in accordance with the criteria described in paragraphs (b)(2)(iii) (A) and (B) of this section.

(A) The Administrator shall select one emission data engine first based on the largest displacement within the engine family. Then from those within the largest displacement the Administrator shall select, in the order listed, highest fuel flow at the speed of maximum rated torque, the engine with the most advanced spark timing, no EGR or lowest EGR flow, and no air pump or lowest actual flow air pump.

(B) The Administrator shall select one additional engine, from within each engine family. The engine selected shall be the engine expected to exhibit the highest emissions of those engines remaining in the engine family. If all engines within the engine family are similar the Administrator may waive the requirements of this paragraph.

(iv) If the engines selected in accordance with paragraphs (b)(2) (ii) and (iii) of this section do not represent each engine displacement-exhaust emission control system combination, then one engine of each engine displacement-exhaust emission control system combination not represented shall be selected by the Administrator.

(v) Within an engine family/displacement/control system combination, the manufacturer may alter any emission data engine (or other engine including current or previous model year emission data engines and development engines provided they meet the emission data engines' protocol) to represent more than one selection under paragraph (b)(2)(iii) of this section.

(3) *Diesel heavy-duty emission data engines.* Paragraph (b)(3) of this section applies to diesel heavy-duty emission data vehicles.

(i) Engines will be chosen to be run for emission data based upon engine family groupings. Within each engine family, the requirements of paragraphs (b)(3) (i) through (iv) of this section must be met.

(ii) Engines of each engine family will be divided into groups based upon their exhaust emission control systems. One engine of each engine system combination shall be run for smoke emission data (diesel engines only) and gaseous emission data. Either the complete gaseous emission test or the complete smoke test may be conducted

first. Within each combination, the engine that features the highest fuel feed per stroke, primarily at the speed of maximum rated torque and secondarily at rated speed, will usually be selected. If there are military engines with higher fuel rates than other engines in the same engine system combinations, then one military engine shall also be selected. The engine with the highest fuel feed per stroke will usually be selected.

(iii) The Administrator may select a maximum of one additional engine within each engine-system combination based upon features indicating that it may have the highest emission levels of the engines of that combination. In selecting this engine, the Administrator will consider such features as the injection system, fuel system, compression ratio, rated speed, rated horsepower, peak torque speed, and peak torque.

(iv) Within an engine family control system combination, the manufacturer may alter any emission data engine (or other engine including current or previous model year emission data engines and development engines provided they meet the emission data engines' protocol) to represent more than one selection under paragraphs (b)(3) (ii) and (iii) of this section.

(c) *Durability data*—(1) *Light-duty vehicle durability data vehicles.* Paragraph (c)(1) of this section applies to light-duty vehicle durability data vehicles.

(i) A durability data vehicle will be selected by the Administrator to represent each engine-system combination. The vehicle selected shall be of the engine displacement with the largest projected sales volume of vehicles with that control-system combination in that engine family and will be designated by the Administrator as to transmission type, fuel system, inertia weight class, and test weight.

(ii) A manufacturer may elect to operate and test additional vehicles to represent any engine-system combination. The additional vehicles must be of the same engine displacement, transmission type, fuel system and inertia weight class as the vehicle selected for that engine-system combination in accordance with the provisions of paragraph (c)(1)(i) of this section. Notice of an intent to operate and test additional vehicles shall be given to the Administrator no later than 30 days following notification of the test fleet selection.

(2) *Light-duty trucks.* Paragraph (c)(2) of this section applies to vehicles, engines, subsystems, or components used to establish exhaust emission deterioration factors for light-duty trucks.

(i) The manufacturer shall select the vehicles, engines, subsystems, or components to be used to determine exhaust emission deterioration factors for each engine-family control system combination. Whether vehicles, engines, subsystems, or components are used, they shall be selected so that their emissions deterioration characteristics may be expected to represent those of in-use vehicles, based on good engineering judgment.

(ii) [Reserved]

(3) *Heavy-duty engines.* Paragraph (c)(3) of this section applies to engines, subsystems, or components used to establish exhaust emission deterioration factors for heavy-duty engines.

(i) The manufacturer shall select the engines, subsystems, or components to be used to determine exhaust emission deterioration factors for each engine-family control system combination. Whether engines, subsystems, or components are used, they shall be selected so that their emissions deterioration characteristics may be expected to represent those of in-use engines, based on good engineering judgment.

(ii) [Reserved]

(d) For purposes of testing under § 86.094–26(a)(9) or (b)(11), the Administrator may require additional emission data vehicles (or emission data engines) and durability data vehicles (light-duty vehicles only) identical in all material respects to vehicles (or engines) selected in accordance with paragraphs (b) and (c) of this section, provided that the number of vehicles (or engines) selected shall not increase the size of either the emission data fleet or the durability data fleet by more than 20 percent or one vehicle (or engine), whichever is greater.

(e)(1) [Reserved]

(2) Any manufacturer may request to certify engine families with combined total sales of fewer than 10,000 light-

duty vehicles, light-duty trucks, heavy-duty vehicles, and heavy-duty engines utilizing the procedures contained in §86.094–14 for emission data vehicle selection and determination of deterioration factors. The deterioration factors shall be applied only to entire engine families.

(f) *Carryover and carryacross of durability and emission data.* In lieu of testing an emission data or durability data vehicle (or engine) selected under paragraph (b) or (c) of this section, and submitting data therefore, a manufacturer may, with the prior written approval of the Administrator, submit exhaust emission data and/or evaporative emission data, as applicable on a similar vehicle (or engine) for which certification has previously been obtained or for which all applicable data required under §86.094–23 has previously been submitted.

(g)(1) Paragraph (g) of this section applies to light-duty vehicles and light-duty trucks, but does not apply to the production vehicles selected under paragraph (h) of this section.

(2)(i) Where it is expected that more than 33 percent of a carline, within an engine-system combination, shall be equipped with an item (whether that item is standard equipment or an option), the full estimated weight of that item shall be included in the curb weight computation for each vehicle available with that item in that carline, within that engine-system combination.

(ii) Where it is expected that 33 percent or less of the carline, within an engine-system combination, will be equipped with an item (whether that item is standard equipment or an option), no weight for that item will be added in computing the curb weight for any vehicle in that carline, within that engine-system combination, unless that item is standard equipment on the vehicle.

(iii) In the case of mutually exclusive options, only the weight of the heavier option will be added in computing the curb weight.

(iv) Optional equipment weighing less than three pounds per item need not be considered.

(3)(i) Where it is expected that more than 33 percent of a carline, within an engine-system combination, will be equipped with an item (whether that item is standard equipment or an option) that can reasonably be expected to influence emissions, then such items shall actually be installed (unless excluded under paragraph (g)(3)(ii) of this section) on all emission data and durability data vehicles of that carline, within that engine-system combination, on which the items are intended to be offered in production. Items that can reasonably be expected to influence emissions are: air conditioning, power steering, power brakes, and other items determined by the Administrator.

(ii) If the manufacturer determines by test data or engineering evaluation that the actual installation of the optional equipment required by paragraph (g)(3)(i) of this section does not affect the emissions or fuel economy values, the optional equipment need not be installed on the test vehicle.

(iii) The weight of the options shall be included in the design curb weight and also be represented in the weight of the test vehicles.

(iv) The engineering evaluation, including any test data, used to support the deletion of optional equipment from test vehicles, shall be maintained by the manufacturer and shall be made available to the Administrator upon request.

(4) Where it is expected that 33 percent or less of a carline, within an engine-system combination, will be equipped with an item (whether that item is standard equipment or an option) that can reasonably be expected to influence emissions, that item shall not be installed on any emission data vehicle or durability data vehicle of that carline, within that engine-system combination, unless that item is standard equipment on that vehicle or specifically required by the Administrator.

(h) *Production AMA Durability Program durability data vehicles.* Paragraph (h) of this section applies to light-duty vehicle durability data vehicles selected under the Production AMA Durability Program described in §86.094–13.

(1) In order to update the durability data to be used to determine a deterioration factor for each engine family group, the Administrator will select durability data vehicles from the manufacturer's production line. Production vehicles will be selected from each model year's production for those vehicles certified using the Production AMA Durability Program procedures.

(i) The Administrator shall select the production durability data vehicle designs from the designs that the manufacturer offers for sale. For each model year and for each engine family group, the Administrator may select production durability data vehicle designs of equal number to the number of engine families within the engine family group, up to a maximum of three vehicles.

(ii) The production durability data vehicles representing the designs selected in paragraph (h)(1)(i) of this section will be randomly selected from the manufacturer's production. The Administrator will make these random selections unless the manufacturer (with prior approval of the Administrator) elects to make the random selections.

(iii) The manufacturer may select additional production durability data vehicle designs from within the engine family group. The production durability data vehicles representing these designs shall be randomly selected from the manufacturer's production in accordance with paragraph (h)(1)(ii) of this section.

(iv) For each production on durability data vehicle selected under paragraph (h)(1) of this section, the manufacturer shall provide to the Administrator (before the vehicle is tested or begins service accumulation) the vehicle identification number. Before the vehicle begins service accumulation the manufacturer shall also provide the Administrator with a description of the durability data vehicle as specified by the Administrator.

(v) In lieu of testing a production durability data vehicle selected under paragraph (h)(1) of this section, and submitting data therefrom, a manufacturer may, with the prior written approval of the Administrator, submit exhaust emission data from a production vehicle of the same configuration for which all applicable data has previously been submitted.

(2) If, within an existing engine family group, a manufacturer requests to certify vehicles of a new design, engine family, emission control system, or with any other durability-related design difference, the Administrator will determine if the existing engine family group deterioration factor is appropriate for the new design. If the Administrator cannot make this determination or deems the deterioration factor not appropriate, the Administrator shall select preproduction durability data vehicles under the provisions of paragraph (c) of this section. If vehicles are then certified using the new design, the Administrator may select production vehicles with the new design under the provisions of paragraph (h)(1) of this section.

(3) If a manufacturer requests to certify vehicles of a new design that the Administrator determines are a new engine family group, the Administrator shall select preproduction durability data vehicles under the provisions of paragraph (c) of this section. If vehicles are then certified using the new design, the Administrator may select production vehicles of that design under the provisions of paragraph (h)(1) of this section.

[58 FR 4014, Jan. 12, 1993, as amended at 59 FR 48498, Sept. 21, 1994; 59 FR 50073, Sept. 30, 1994]

§ 86.094–25 Maintenance.

(a)(1) *Applicability*. This section applies to light-duty vehicles, light-duty trucks, and heavy-duty engines.

(2) Maintenance performed on vehicles, engines, subsystems, or components used to determine exhaust or evaporative emission deterioration factors is classified as either emission-related or non-emission-related and each of these can be classified as either scheduled or unscheduled. Further, some emission-related maintenance is also classified as critical emission-related maintenance.

(b) This section specifies emission-related scheduled maintenance for purposes of obtaining durability data and for inclusion in maintenance instructions furnished to purchasers of new

motor vehicles and new motor vehicles engines under §86.087–38.

(1) All emission-related scheduled maintenance for purposes of obtaining durability data must occur at the same mileage intervals (or equivalent intervals if engines, subsystems, or components are used) that will be specified in the manufacturer's maintenance instructions furnished to the ultimate purchaser of the motor vehicle or engine under §86.094–35. This maintenance schedule may be updated as necessary throughout the testing of the vehicle/engine, provided that no maintenance operation is deleted from the maintenance schedule after the operation has been performed on the test vehicle or engine.

(2) Any emission-related maintenance which is performed on vehicles, engines, subsystems, or components must be technologically necessary to assure in-use compliance with the emission standards. The manufacturer must submit data which demonstrate to the Administrator that all of the emission-related scheduled maintenance which is to be performed is technologically necessary. Scheduled maintenance must be approved by the Administrator prior to being performed or being included in the maintenance instructions provided to purchasers under §86.087–38. The Administrator has determined that emission-related maintenance at shorter intervals than those outlined in paragraphs (b) (3) and (4) of this section is not technologically necessary to ensure in-use compliance. However, the Administrator may determine that maintenance even more restrictive (e.g., longer intervals) than that listed in paragraphs (b) (3) and (4) of this section is also not technologically necessary.

(3) For Otto-cycle light-duty vehicles, light-duty trucks and heavy duty engines, emission-related maintenance in addition to, or at shorter intervals than, that listed in paragraphs (b)(3) (i) through (vii) of this section will not be accepted as technologically necessary, except as provided in paragraph (b)(7) of this section.

(i)(A) The cleaning or replacement of light-duty vehicle or light-duty truck spark plugs shall occur at 30,000 miles of use and at 30,000-mile intervals thereafter.

(B) The cleaning or replacement of Otto-cycle heavy duty engine spark plugs shall occur at 25,000 miles (or 750 hours) of use and at 25,000-mile (or 750-hour) intervals thereafter, for engines certified for use with unleaded fuel only.

(ii) For light-duty vehicles and light-duty trucks, the adjustment, cleaning, repair, or replacement of the items listed in paragraphs (b)(3)(ii) (A) through (D) of this section shall occur at 50,000 miles of use and at 50,000-mile intervals thereafter.

(A) Positive crankcase ventilation valve.

(B) Emission-related hoses and tubes.

(C) Ignition wires.

(D) Idle mixture.

(iii) For heavy-duty engines, the adjustment, cleaning, repair, or replacement of the items listed in paragraphs (b)(3)(iii) (A) through (D) of this section shall occur at 50,000 miles (or 1,500 hours) of use and at 50,000-mile (or 1,500-hour) intervals thereafter.

(A) Positive crankcase ventilation valve.

(B) Emission-related hoses and tubes.

(C) Ignition wires.

(D) Idle mixture.

(iv) For light-duty vehicles, light-duty trucks and heavy-duty engines, the adjustment, cleaning, repair, or replacement of the oxygen sensor shall occur at 80,000 miles (or 2,400 hours) of use and at 80,000-mile (or 2,400-hour) intervals thereafter.

(v) For heavy-duty engines, the adjustment, cleaning, repair, or replacement of the items listed in paragraphs (b)(3)(v) (A) through (G) of this section shall occur at 100,000 miles (or 3,000 hours) of use and at 100,000-mile (or 3,000-hour) intervals thereafter.

(A) Catalytic converter.

(B) Air injection system components.

(C) Fuel injectors.

(D) Electronic engine control unit and its associated sensors (except oxygen sensor) and actuators.

(E) Evaporative emission canister.

(F) Turbochargers.

(G) Carburetors.

(vi) For light-duty vehicles and light-duty trucks, the adjustment, cleaning, repair, or replacement of the items

listed in paragraphs (b)(3)(vi) (A) through (I) of this section shall occur at 100,000 miles of use and at 100,000-mile intervals thereafter.

(A) Catalytic converter.

(B) Air injection system components.

(C) Fuel injectors.

(D) Electronic engine control unit and its associated sensors (except oxygen sensor) and actuators.

(E) Evaporative emission canister.

(F) Turbochargers.

(G) Carburetors.

(H) Superchargers.

(I) EGR System including all related filters and control valves.

(vii) For heavy-duty engines certified for use with unleaded fuel only, the adjustment, cleaning, repair, or replacement of the EGR system (including all related filters and control valves) shall occur at 50,000 miles (or 1,500 hours) of use and at 50,000-mile (or 1,500-hour) intervals thereafter.

(4) For diesel-cycle light-duty vehicles, light-duty trucks, and heavy-duty engines, emission-related maintenance in addition to, or at shorter intervals than that listed in paragraphs (b)(4) (i) through (iv) of this section will not be accepted as technologically necessary, except as provided in paragraph (b)(7) of this section.

(i) For heavy-duty engines, the adjustment, cleaning, repair, or replacement of the items listed in paragraphs (b)(4)(i) (A) through (C) of this section shall occur at 50,000 miles (or 1,500 hours) of use and at 50,000-mile (or 1,500-hour) intervals thereafter.

(A) Exhaust gas recirculation system including all related filters and control valves.

(B) Positive crankcase ventilation valve.

(C) Fuel injector tips (cleaning only).

(ii) For light-duty vehicles and light-duty trucks, the adjustment, cleaning, repair, or replacement of the positive crankcase ventilation valve shall occur at 50,000 miles of use and at 50,000-mile intervals thereafter.

(iii) The adjustment, cleaning, repair, or replacement of items listed in paragraphs (b)(4)(iii) (A) through (D) of this section shall occur at 100,000 miles (or 3,000 hours) of use and at 100,000-mile (or 3,000-hour) intervals thereafter for light heavy-duty engines, or, at 150,000 miles (or 4,500 hours) intervals thereafter for medium and heavy-duty engines.

(A) Fuel injectors.

(B) Turbocharger.

(C) Electronic engine control unit and its associated sensors and actuators.

(D) Particulate trap or trap-oxidizer system (including related components).

(iv) For light-duty vehicles and light-duty trucks, the adjustment, cleaning, repair, or replacement shall occur at 100,000 miles of use and at 100,000-mile intervals thereafter of the items listed in paragraphs (b)(4)(iv) (A) through (G) of this section.

(A) Fuel injectors.

(B) Turbocharger.

(C) Electronic engine control unit and its associated sensors and actuators.

(D) Particulate trap or trap-oxidizer system (including related components).

(E) Exhaust gas recirculation system including all related filters and control valves.

(F) Catalytic converter.

(G) Superchargers.

(5) [Reserved]

(6)(i) The components listed in paragraphs (b)(6)(i) (A) through (G) of this section are currently defined as critical emission-related components.

(A) Catalytic converter.

(B) Air injection system components.

(C) Electronic engine control unit and its associated sensors (including oxygen sensor if installed) and actuators.

(D) Exhaust gas recirculation system (including all related filters and control valves).

(E) Positive crankcase ventilation valve.

(F) Evaporative emission control system components (excluding canister air filter).

(G) Particulate trap or trap-oxidizer system.

(ii) All critical emission-related scheduled maintenance must have a reasonable likelihood of being performed in-use. The manufacturer shall be required to show the reasonable likelihood of such maintenance being performed in-use, and such showing shall be made prior to the performance of the maintenance on the durability

data vehicle. Critical emission-related scheduled maintenance items which satisfy one of the conditions defined in paragraphs (b)(6)(ii) (A) through (F) of this section will be accepted as having a reasonable likelihood of the maintenance item being performed in-use.

(A) Data are presented which establish for the Administrator a connection between emissions and vehicle performance such that as emissions increase due to lack of maintenance, vehicle performance will simultaneously deteriorate to a point unacceptable for typical driving.

(B) Survey data are submitted which adequately demonstrate to the Administrator that, at an 80 percent confidence level, 80 percent of such engines already have this critical maintenance item performed in-use at the recommended interval(s)

(C) A clearly displayed visible signal system approved by the Administrator is installed to alert the vehicle driver that maintenance is due. A signal bearing the message ''maintenance needed'' or ''check engine,'', or a similar message approved by the Administrator, shall be actuated at the appropriate mileage point or by component failure. This signal must be continuous while the engine is in operation and not be easily eliminated without performance of the required maintenance. Resetting the signal shall be a required step in the maintenance operation. The method for resetting the signal system shall be approved by the Administrator.

(D) A manufacturer may desire to demonstrate through a survey that a critical maintenance item is likely to be performed without a visible signal on a maintenance item for which there is no prior in-use experience without the signal. To that end, the manufacturer may in a given model year market up to 200 randomly selected vehicles per critical emission-related maintenance item without such visible signals, and monitor the performance of the critical maintenance item by the owners to show compliance with paragraph (b)(6)(ii)(B) of this section. This option is restricted to two consecutive model years and may not be repeated until any previous survey has been completed. If the critical maintenance involves more than one engine family, the sample will be sales weighted to ensure that it is representative of all the families in question.

(E) The manufacturer provides the maintenance free of charge, and clearly informs the customer that the maintenance is free in the instructions provided under § 86.087–38.

(F) Any other method which the Administrator approves as establishing a reasonable likelihood that the critical maintenance will be performed in-use.

(iii) Visible signal systems used under paragraph (b)(6)(ii)(C) of this section are considered an element of design of the emission control system. Therefore, disabling, resetting, or otherwise rendering such signals inoperative without also performing the indicated maintenance procedure is a prohibited act under section 203(a)(3) of the Clean Air Act (42 U.S.C. 7522(a) (3)).

(7) *Changes to scheduled maintenance.* (i) For maintenance practices that existed prior to the 1980 model year, only the maintenance items listed in paragraphs (b) (3) and (4) of this section are currently considered by EPA to be emission-related. The Administrator may, however, determine additional scheduled maintenance items that existed prior to the 1980 model year to be emission-related by announcement in a FEDERAL REGISTER Notice. In no event may this notification occur later than September 1 of the calendar year two years prior to the affected model year.

(ii) In the case of any new scheduled maintenance, the manufacturer must submit a request for approval to the Administrator for any maintenance that it wishes to recommend to purchasers and perform during durability determination. New scheduled maintenance is that maintenance which did not exist prior to the 1980 model year, including that which is a direct result of the implementation of new technology not found in production prior to the 1980 model year. The manufacturer must also include its recommendations as to the category (i.e., emission-related or non-emission-related, critical or non-critical) of the subject maintenance and, for suggested emission-related maintenance, the maximum feasible maintenance interval. Such requests must include detailed evidence

supporting the need for the maintenance requested, and supporting data or other substantiation for the recommended maintenance category and for the interval suggested for emission-related maintenance. Requests for new scheduled maintenance must be approved prior to the introduction of the new maintenance. The Administrator will then designate the maintenance as emission-related or non-emission-related. For maintenance items established as emission-related, the Administrator will further designate the maintenance as critical if the component which receives the maintenance is a critical component under paragraph (b)(6) of this section. For each maintenance item designated as emission-related, the Administrator will also establish a technologically necessary maintenance interval, based on industry data and any other information available to EPA. Designations of emission-related maintenance items, along with their identification as critical or non-critical, and establishment of technologically necessary maintenance intervals, will be announced in the FEDERAL REGISTER.

(iii) Any manufacturer may request a hearing on the Administrator's determinations in paragraph (b)(7) of this section. The request shall be in writing and shall include a statement specifying the manufacturer's objections to the Administrator's determinations, and data in support of such objections. If, after review of the request and supporting data, the Administrator finds that the request raises a substantial factual issue, he shall provide the manufacturer a hearing in accordance with § 86.078–6 with respect to such issue.

(c) *Non-emission-related scheduled maintenance* which is reasonable and technologically necessary (e.g., oil change, oil filter change, fuel filter change, air filter change, cooling system maintenance, adjustment of idle speed, governor, engine bolt torque, valve lash, injector lash, timing, adjustment of air pump drive belt tension, lubrication of the exhaust manifold heat control valve, lubrication of carburetor choke linkage, retorqueing carburetor mounting bolts, etc.) may be performed on durability data vehicles at the least frequent intervals recommended by the manufacturer to the ultimate purchaser, (e.g., not at the intervals recommended for severe service).

(d) *Unscheduled maintenance on light-duty durability data vehicles.* (1) Unscheduled maintenance may be performed during the testing used to determine deterioration factors, except as provided in paragraphs (d) (2) and (3) of this section, only under the following provisions defined in paragraphs (d)(1) (i) through (iii) of this section.

(i) A fuel injector or spark plug may be changed if a persistent misfire is detected.

(ii) Readjustment of an Otto-cycle vehicle cold-start enrichment system may be performed if there is a problem of stalling.

(iii) Readjustment of the engine idle speed (curb idle and fast idle) may be performed in addition to that performed as scheduled maintenance under paragraph (c) of this section if the idle speed exceeds the manufacturer's recommended idle speed by 300 rpm or more, or if there is a problem of stalling.

(2) Any other unscheduled vehicle, emission control system, or fuel system adjustment, repair, removal, disassembly, cleaning, or replacement during testing to determine deterioration factors shall be performed only with the advance approval of the Administrator. Such approval will be given if the Administrator:

(i) Has made a preliminary determination that the part failure or system malfunction, or the repair of such failure or malfunction, does not render the vehicle or engine unrepresentative of vehicles or engines in-use and does not require direct access to the combustion chamber, except for spark plug, fuel injection component, or removable prechamber removal or replacement.

(ii) Has made a determination that the need for maintenance or repairs is indicated by an overt indication of malfunction such as persistent misfiring, engine stalling, overheating, fluid leakage, loss of oil pressure, excessive fuel consumption, or excessive power loss. The Administrator shall be given the opportunity to verify the existence of an overt indication of part failure and/or vehicle/engine malfunction (e.g.,

misfiring, stalling, black smoke), or an activation of an audible and/or visible signal, prior to the performance of any maintenance to which such overt indication or signal is relevant under the provisions of this section.

(iii) Has made a determination that the OBD system of a durability data vehicle representing an engine family certifying fully to the Federal OBD requirements as specified in §86.094–17(a) through (h) has specifically detected the problem and has illuminated the malfunction indicator light.

(3) Emission measurement may not be used as a means of determining the need for unscheduled maintenance under paragraph (d)(2) of this section, except under the conditions defined in paragraphs (d)(3) (i) through (ii) of this section.

(i) The Administrator may approve unscheduled maintenance on durability data vehicles based upon a significant change in emission levels that indicates a vehicle or engine malfunction. In these cases the Administrator may first approve specific diagnostic procedures to identify the source of the problem. The Administrator may further approve of specific corrections to the problem after the problem has been identified. The Administrator may only approve the corrective action after it is determined that:

(A) The malfunction was caused by nonproduction build practices or by a previously undetected design problem;

(B) The malfunction will not occur in production vehicles or engines in-use; and

(C) The deterioration factor generated by the durability data vehicle or engine will remain unaffected by the malfunction or by the corrective action (e.g., the malfunction was present for only a short period of time before detection, replacement parts are functionally representative of the proper mileage or hours, etc.).

(ii) Following any unscheduled maintenance approved under paragraph (d)(3)(i) of this section, the manufacturer shall perform an after-maintenance emission test. If the Administrator determines that the after-maintenance emission levels for any pollutant indicates that the deterioration factor is no longer representative of production, the Administrator may disqualify the durability data vehicle or engine.

(4) If the Administrator determines that part failure or system malfunction occurrence and/or repair rendered the vehicle/engine unrepresentative of vehicles in-use, the vehicle/engine shall not be used for determining deterioration factors.

(5) Repairs to vehicle components of a durability data vehicle other than the engine, emission control system, or fuel system, shall be performed only as a result of part failure, vehicle system malfunction, or with the advance approval of the Administrator.

(e) *Maintenance on emission data vehicles and engines.* (1) Adjustment of engine idle speed on emission data vehicles may be performed once before the low-mileage/low-hour emission test point. Any other engine, emission control system, or fuel system adjustment, repair, removal, disassembly, cleaning, or replacement on emission data vehicles shall be performed only with the advance approval of the Administrator.

(2)–(3) [Reserved]

(4) Repairs to vehicle components of an emission data vehicle other than the engine, emission control system, or fuel system, shall be performed only as a result of part failure, vehicle system malfunction, or with the advance approval of the Administrator.

(f) Equipment, instruments, or tools may not be used to identify malfunctioning, maladjusted, or defective engine components unless the same or equivalent equipment, instruments, or tools will be available to dealerships and other service outlets and:

(1) Are used in conjunction with scheduled maintenance on such components; or

(2) Are used subsequent to the identification of a vehicle or engine malfunction, as provided in paragraph (d)(2) of this section for durability data vehicles or in paragraph (e)(1) of this section for emission data vehicles; or

(3) Unless specifically authorized by the Administrator.

(g)(1) Paragraph (g) of this section applies to light-duty vehicles.

(2) Complete emission tests (see §§86.106 through 86.145) are required, unless waived by the Administrator,

before and after scheduled maintenance approved for durability data vehicles. The manufacturer may perform emission tests before unscheduled maintenance. Complete emission tests are required after unscheduled maintenance which may reasonably be expected to affect emissions. The Administrator may waive the requirement to test after unscheduled maintenance. These test data may be submitted weekly to the Administrator, but shall be air posted or delivered within 7 days after completion of the tests, along with a complete record of all pertinent maintenance, including a preliminary engineering report of any malfunction diagnosis and the corrective action taken. A complete engineering report shall be delivered to the Administrator concurrently with the manufacturer's application for certification.

(h) All test data, maintenance reports, and required engineering reports shall be compiled and provided to the Administrator in accordance with § 86.090–23.

[58 FR 4018, Jan. 12, 1993, as amended at 58 FR 9487, Feb. 19, 1993]

§ 86.094–26 Mileage and service accumulation; emission requirements.

(a)(1) Paragraph (a) of this section applies to light-duty vehicles. It prescribes mileage and service accumulation requirements for durability data vehicles run under either the Standard AMA Durability Program of § 86.094–13(c) or the Production AMA Durability Program of § 86.094–13(d), and for emission data vehicles regardless of the durability program employed. Service accumulation requirements for durability data vehicles run under the Alternative Service Accumulation Program may be found in § 86.094–13(e).

(2) The standard method of whole-vehicle service accumulation for durability data vehicles and for emission data vehicles in model years 1994 and beyond shall be mileage accumulation using the Durability Driving Schedule as specified in appendix IV to this part. A modified procedure may also be used if approved in advance by the Administrator. Except with the advance approval of the Administrator, all vehicles will accumulate mileage at a measured curb weight which is within 100 pounds of the estimated curb weight. If the loaded vehicle weight is within 100 pounds of being included in the next higher inertia weight class as specified in § 86.129, the manufacturer may elect to conduct the respective emission tests at higher loaded vehicle weight.

(3) *Emission data vehicles.* Unless otherwise provided for in § 86.094–23(a), emission data vehicles shall be operated and tested as described in paragraphs (a)(3) (i) and (ii) of this section.

(i) *Otto-cycle.* (A) The manufacturer shall determine, for each engine family, the mileage at which the engine-system combination is stabilized for emission data testing. The manufacturer shall maintain, and provide to the Administrator if requested, a record of the rationale used in making this determination. The manufacturer may elect to accumulate 4,000 miles on each test vehicle within an engine family without making a determination. The manufacturer must accumulate a minimum of 2,000 miles (3,219 kilometers) on each test vehicle within an engine family. All test vehicle mileage must be accurately determined, recorded, and reported to the Administrator. Any vehicle used to represent emission data vehicle selections under § 86.094–24(b)(1) shall be equipped with an engine and emission control system that has accumulated the mileage the manufacturer chose to accumulate on the test vehicle. Fuel economy data generated from certification vehicles selected in accordance with § 86.094–24(b)(1) with engine-system combinations that have accumulated more than 10,000 kilometers (6,200 miles) shall be factored in accordance with § 600.006(c) of this chapter. Complete exhaust and evaporative (if required) emission tests shall be conducted for each emission data vehicle selection under § 86.094–24(b)(1) . The Administrator may determine under § 86.094–24(f) that no testing is required.

(B) Emission tests for emission data vehicle(s) selected for testing under § 86.094–24(b)(1) (v) or (viii) shall be conducted at the mileage (2,000 mile minimum) at which the engine-system combination is stabilized for emission testing under high-altitude conditions.

(C) Exhaust and evaporative emissions tests for emission data vehicle(s) selected for testing under § 86.094–24(b)(1) (i), (ii), (iii), (iv), or (vii)(B) shall be conducted at the mileage (2,000 mile minimum) at which the engine-system combination is stabilized for emission testing under low-altitude conditions.

(D) For each engine family, the manufacturer will either select one vehicle previously selected under § 86.094–24(b)(1) (i) through (iv) to be tested under high-altitude conditions or provide a statement in accordance with § 86.094–24(b)(1)(v). Vehicles shall meet emission standards under both low- and high-altitude conditions without manual adjustments or modifications. In addition, any emission control device used to conform with the emission standards under high-altitude conditions shall initially actuate (automatically) no higher than 4,000 feet above sea level.

(ii) *Diesel-cycle.* (A) The manufacturer shall determine, for each engine family, the mileage at which the engine-system combination is stabilized for emission data testing. The manufacturer shall maintain, and provide to the Administrator if requested, a record of the rationale used in making this determination. The manufacturer may elect to accumulate 4,000 miles on each test vehicle within an engine family without making a determination. The manufacturer must accumulate a minimum of 2,000 miles (3,219 kilometers) on each test vehicle within an engine family. All test vehicle mileage must be accurately determined, recorded, and reported to the Administrator. Any vehicle used to represent emission data vehicle selections under § 86.094–24(b)(1) shall be equipped with an engine and emission control system that has accumulated the mileage the manufacturer chose to accumulate on the test vehicle. Fuel economy data generated from certification vehicles selected in accordance with § 86.094–24(b)(1) with engine-system combinations that have accumulated more than 10,000 kilometers (6,200 miles) shall be factored in accordance with § 600.006 of this chapter. Complete exhaust emission tests shall be conducted for each emission data vehicle selection under § 86.094–24(b)(1). The Administrator may determine under § 86.094–24(f) that no testing is required.

(B) Emission tests for emission data vehicle(s) selected for testing under § 86.094–24(b)(1)(v) shall be conducted at the mileage (2,000 mile minimum) at which the engine-system combination is stabilized for emission testing under high-altitude conditions.

(C) Exhaust and evaporative emission tests for emission data vehicle(s) selected for testing under § 86.094–24(b)(1) (i), (ii), (iii), (iv), or (vii)(B) shall be conducted at the mileage (2,000 mile minimum) at which the engine-system combination is stabilized for emission testing under low-altitude conditions.

(D) For each engine family, the manufacturer will either select one vehicle previously selected under § 86.094–24(b)(1) (i) through (iv) to be tested under high-altitude conditions or provide a statement in accordance with § 86.094–24(b)(1)(v). Vehicles shall meet emission standards under both low- and high-altitude conditions without manual adjustments or modifications. In addition, any emission control device used to conform with the emission standards under high-altitude conditions shall initially actuate (automatically) no higher than 4,000 feet above sea level.

(4)(i) *Durability data vehicles.* (A) Unless otherwise provided for in § 86.094–13(e) or § 86.094–23(a) or in paragraph (a)(4)(i)(B) of this section, each durability data vehicle shall be driven on the whole-vehicle mileage accumulation cycle specified in paragraph (a)(2) of this section, with all emission control systems installed and operating, up to a mileage endpoint corresponding to the vehicle's durability useful life as defined in § 86.094–2.

(B) *Extrapolation of durability data and changes to the mileage accumulation cycle.* (*1*) Once a durability vehicle has reached the greater of 75,000 miles or three-quarters of the applicable durability useful life, the manufacturer may petition the Administrator to extrapolate the durability data obtained up to that point out to the durability useful life or to replace the mileage accumulation cycle with an alternative that meets the criteria of paragraph (a)(2) of this section. In the petition,

the manufacturer shall supplement the durability vehicle data with other information demonstrating the durability of the vehicle's emission control components and systems at or beyond the durability useful life.

(*2*) Factors the Administrator will consider in evaluating petitions for extrapolation of durability data or for changes to the mileage accumulation cycle include, but are not limited to, any unusual scheduled maintenance, unscheduled maintenance, the general linearity and scatter of the actual data, reasonable explanations for all outlier data, the technical validity of any substitute mileage accumulation cycle, and evidence supplied by the vehicle manufacturer of component and system durability.

(*3*) If a petition for extrapolation of durability data is approved, the endpoint for whole-vehicle mileage accumulation of the durability data vehicle shall be the mileage attained by the vehicle as reflected in the petition.

(*4*) Discontinuation of a durability data vehicle shall be allowed only with the consent of the Administrator.

(C) Complete exhaust emission tests shall be made at nominal test point mileage intervals that the manufacturer determines. At a minimum, two complete exhaust emission tests shall be made. The first test shall be made at a distance not greater than 6,250 miles. The last shall be made at the mileage accumulation endpoint determined in paragraph (a)(4)(i) (A) or (B) of this section, whichever is applicable.

(D) Except with advance approval of the Administrator, the mileage interval between nominal test points must be of equal length except for the interval between zero miles and the first test, and any interval before or after testing conducted in conjunction with vehicle maintenance as specified in § 86.094–25(g)(2).

(ii) The manufacturer may, at its option, alter the durability data vehicle at the selected nominal test point to represent emission data vehicle(s) within the same engine-system combination and perform emission tests on the altered vehicle. Upon completion of emission testing, the manufacturer may return the test vehicle to the durability data vehicle configuration and continue mileage accumulation.

(5)(i) All tests required by this subpart on emission data vehicles shall be conducted at a mileage equal to or greater than the mileage the manufacturer determines under paragraph (a)(3) of this section.

(ii) All tests required by this subpart on durability data vehicles shall be conducted within 250 miles of each of the nominal test points. This ±250 mile test point mileage tolerance may be modified with the advance approval of the Administrator if the basis for the written request is to prevent an interruption of durability mileage accumulation due to test scheduling conflicts for weekends, holidays, and other similar circumstances.

(6)(i)(A) The manufacturer may conduct multiple tests at any test point at which the data are intended to be used in the deterioration factor. At each test point where multiple tests are conducted, the test results from all valid tests shall be averaged to determine the data point to be used in the deterioration factor calculation, except under paragraph (a)(6)(i)(B) of this section. The test results from emission tests performed before maintenance affecting emissions shall not be averaged with test results after the maintenance.

(B) The manufacturer is not required to average multiple tests if the manufacturer conducts no more than three tests at each test point and if the number of tests at each test point is equal. All test points must be treated the same for all exhaust pollutants.

(ii) The results of all emission testing shall be supplied to the Administrator. The manufacturer shall furnish to the Administrator explanation for voiding any test. The Administrator will determine if voiding the test was appropriate based upon the explanation given by the manufacturer for the voided test. Tests between test points may be conducted as required by the Administrator. Data from all tests (including voided tests) may be submitted weekly to the Administrator, but shall be air posted or delivered to the Administrator within 7 days after completion of the test. In addition, all test data shall be compiled and provided to the

Administrator in accordance with § 86.091–23. Where the Administrator conducts a test on a durability data vehicle at a prescribed test point, the results of that test will be used in the calculation of the deterioration factor.

(iii) The results of all emission tests shall be rounded to the number of places to the right of the decimal point indicated by expressing the applicable emission standard of this subpart to one additional significant figure, in accordance with the rounding off method specified in ASTM E 29–67 (reapproved 1980) (''Standard recommended practice for indicating which places of figures are to be considered significant in specified limiting values,'' American Society for Testing and Materials). This incorporation by reference was approved by the Director of the Federal Register in accordance with 5 U.S.C. 552(a) and 1 CFR part 51. Copies may be obtained from American Society for Testing and Materials, 1916 Race St., Philadelphia, PA 19103. Copies may be inspected at the U.S. Environmental Protection Agency, Air Docket Section, room M–1500, 401 M Street SW., Washington, DC 20460 or at the Office of the Federal Register, 800 North Capitol Street, NW., suite 700, Washington DC.

(7) Whenever a manufacturer intends to operate and test a vehicle which may be used for emission or durability data, the manufacturer shall retain in its records all information concerning all emissions tests and maintenance, including vehicle alterations to represent other vehicle selections. For emission data vehicles, this information shall be submitted, including the vehicle description and specification information required by the Administrator, to the Administrator following the emission data test. For durability data vehicles, this information shall be submitted following the 5,000-mile test.

(8) The data from emission data vehicles and durability data vehicles obtained pursuant to the provisions of this section will be used in the calculations under § 86.094–28.

(9)(i) The Administrator may elect to operate and test any test vehicle during all or any part of the mileage accumulation and testing procedure. In such cases, the manufacturer shall provide the vehicle(s) to the Administrator with all information necessary to conduct this testing.

(ii) The test procedures in §§ 86.106 through 86.145 will be followed by the Administrator. The Administrator will test the vehicles at each test point. Maintenance may be performed by the manufacturer under such conditions as the Administrator may prescribe.

(iii) The data developed by the Administrator for the engine-system combination shall be combined with any applicable data supplied by the manufacturer on other vehicles of that combination to determine the applicable deterioration factors for the combination. In the case of a significant discrepancy between data developed by the Administrator and that submitted by the manufacturer, the Administrator's data shall be used in the determination of deterioration factors.

(10) Emission testing of any type with respect to any certification vehicle other than that specified in this part is not allowed except as such testing may be specifically authorized by the Administrator.

(11) This section does not apply to testing conducted to meet the requirements of § 86.091–23(b)(2).

(b)(1) Paragraph (b) of this section applies to light-duty trucks.

(2) Four types of mileage or service accumulation are applicable to light-duty trucks, as described in paragraphs (b)(2) (i) through (iv) of this section.

(i) Paragraph (b)(2)(i) of this section applies to service accumulation conducted under the Standard Self-Approval Durability Program of § 86.094–13(f). This type of service accumulation is applicable for model years 1994 and beyond only. The manufacturer determines the form and extent of this service accumulation, consistent with good engineering practice, and describes it in the application for certification. Service accumulation under the Standard Self-Approval Durability Program is conducted on vehicles, engines, subsystems, or components selected by the manufacturer under § 86.094–24(c)(2)(i).

(ii) Paragraph (b)(2)(ii) of this section applies to service accumulation conducted under the Alternative Service Accumulation Durability Program of § 86.094–13(e). This type of service accumulation is applicable for model years

1994 and beyond only. The service accumulation method is developed by the manufacturer to be consistent with good engineering practice and to accurately predict the deterioration of the vehicle's emissions in actual use over its full useful life. The method is subject to advance approval by the Administrator and to verification by an in-use verification program conducted by the manufacturer under § 86.094–13(e)(5).

(iii) Paragraph (b)(2)(iii) of this section applies to mileage accumulation of the duration selected by the manufacturer on emission data vehicles selected under § 86.094–24(b)(1). The procedure for mileage accumulation will be the Durability Driving Schedule as specified in appendix IV to this part. A modified procedure may also be used if approved in advance by the Administrator. Except with the advance approval of the Administrator, all vehicles will accumulate mileage at a measured curb weight which is within 100 pounds of the estimated curb weight. If the loaded vehicle weight is within 100 pounds of being included in the next higher inertia weight class as specified in § 86.129, the manufacturer may elect to conduct the respective emission tests at higher loaded vehicle weight.

(iv) Service or mileage accumulation may also be part of the test procedures used by the manufacturer to establish evaporative emission deterioration factors.

(3) Exhaust emission deterioration factors will be determined on the basis of the mileage or service accumulation described in paragraph (b)(2) (i) or (ii) of this section and related testing, according to the manufacturer's procedures.

(4) Each emission data vehicle shall be operated and tested as follows:

(i) *Otto-cycle.* (A) The manufacturer shall determine, for each engine family, the mileage at which the engine-system combination is stabilized for emission data testing. The manufacturer shall maintain, and provide to the Administrator if requested, a record of the rationale used in making this determination. The manufacturer may elect to accumulate 4,000 miles on each test vehicle within an engine family without making a determination. The manufacturer must accumulate a minimum of 2,000 miles (3,219 kilometers) on each test vehicle within an engine family. All test vehicle mileage must be accurately determined, recorded, and reported to the Administrator. Any vehicle used to represent emission data vehicle selections under § 86.094–24(b)(1) shall be equipped with an engine and emission control system that has accumulated the mileage the manufacturer chose to accumulate on the test vehicle. Fuel economy data generated from certification vehicles selected in accordance with § 86.094–24(b)(1) with engine-system combinations that have accumulated more than 10,000 kilometers (6,200 miles) shall be factored in accordance with § 600.006 of this chapter. Complete exhaust emission tests shall be conducted for each emission data vehicle selection under § 86.094–24(b)(1). The Administrator may determine under § 86.094–24(f) that no testing is required.

(B) Emission tests for emission data vehicle(s) selected for testing under § 86.094–24(b)(1) (v) or (viii) shall be conducted at the mileage (2,000 mile minimum) at which the engine-system combination is stabilized for emission testing or at 6,436 kilometers (4,000 miles) under high-altitude conditions.

(C) Exhaust and evaporative emission tests for emission data vehicle(s) selected for testing under § 86.094–24(b)(1) (ii), (iii), (iv)(A), or (vii)(B) shall be conducted at the mileage (2,000 mile minimum) at which the engine-system combination is stabilized for emission testing or at 6,436 kilometer (4,000 mile) test point under low-altitude conditions.

(D) If the manufacturer recommends adjustments or modifications in order to conform to emission standards at high altitude, such adjustments or modifications shall be made to the test vehicle selected under § 86.094–24(b)(1) (v) and (viii) (in accordance with the instructions to be provided to the ultimate purchaser) before being tested under high-altitude conditions.

(ii) *Diesel-cycle.* (A) The manufacturer shall determine, for each engine family, the mileage at which the engine-system combination is stabilized for emission data testing. The manufacturer shall maintain, and provide to

the Administrator if requested, a record of the rationale used in making this determination. The manufacturer may elect to accumulate 4,000 miles on each test vehicle within an engine family without making a determination. The manufacturer must accumulate a minimum of 2,000 miles (3,219 kilometers) on each test vehicle within an engine family. All test vehicle mileage must be accurately determined, recorded, and reported to the Administrator. Any vehicle used to represent emission data vehicle selections under §86.094–24(b)(1) shall be equipped with an engine and emission control system that has accumulated the mileage the manufacturer chose to accumulate on the test vehicle. Fuel economy data generated from certification vehicles selected in accordance with §86.094–24(b)(1) with engine-system combinations that have accumulated more than 10,000 kilometers (6,200 miles) shall be factored in accordance with §600.006(c) of this chapter. Complete exhaust emission tests shall be conducted for each emission data vehicle selection under §86.094–24(b)(1). The administrator may determine under §86.094–24(f) that no testing is required.

(B) Emission tests for emission data vehicle(s) selected for testing under §86.094–24(b)(1)(v) shall be conducted at the mileage (2,000 mile minimum) at which the engine-system combination is stabilized for emission testing or at the 6,436 kilometer (4,000 mile) test point under high-altitude conditions.

(C) Exhaust and evaporative emission tests for emission data vehicle(s) selected for testing under §86.094–24(b)(1)(ii), (iii), and (iv) shall be conducted at the mileage (2,000 mile minimum) at which the engine-system combination is stabilized for emission testing or at the 6,436 kilometer (4,000 mile) test point under low-altitude conditions.

(D) If the manufacturer recommends adjustments or modifications in order to conform to emission standards at high-altitude, such adjustments or modifications shall be made to the test vehicle selected under §86.094–24(b)(1)(v) and (viii) (in accordance with the instructions to be provided to the ultimate purchaser) before being tested under high-altitude conditions.

(iii) [Reserved]

(iv) All tests required by this subpart on emission data vehicles shall be conducted at a mileage equal to or greater than the mileage the manufacturer determines under paragraph (b)(4) of this section.

(c)(1) Paragraph (c) of this section applies to heavy-duty engines.

(2) Two types of service accumulation are applicable to heavy-duty engines, as described in paragraphs (c)(2) (i) and (ii) of this section.

(i) Service accumulation on engines, subsystems, or components selected by the manufacturer under §86.094–24(c)(3)(i). The manufacturer determines the form and extent of this service accumulation, consistent with good engineering practice, and describes it in the application for certification.

(ii) Dynamometer service accumulation on emission data engines selected under §86.094–24(b) (2) or (3). The manufacturer determines the engine operating schedule to be used for dynamometer service accumulation, consistent with good engineering practice. A single engine operating schedule shall be used for all engines in an engine family-control system combination. Operating schedules may be different for different combinations.

(3) Exhaust emission deterioration factors will be determined on the basis of the service accumulation described in paragraph (b)(2)(i) of this section and related testing, according to the manufacturer's procedures.

(4) The manufacturer shall determine, for each engine family, the number of hours at which the engine system combination is stabilized (no less than 62 hours for catalyst equipped) for emission data testing. The manufacturer shall maintain, and provide to the Administrator if requested, a record of the rationale used in making this determination. The manufacturer may elect to accumulate 125 hours on each test engine within an engine family without making a determination. Any engine used to represent emission data engine selections under §86.094–24(b)(2) shall be equipped with an engine system combination that has accumulated at least the number of hours determined under this paragraph. Complete exhaust emission tests shall be

conducted for each emission data engine selection under § 86.094–24(b)(2). Evaporative emission controls need not be connected provided normal operating conditions are maintained in the engine induction system. The Administrator may determine under § 86.094–24(f) that no testing is required.

(d)(1) Paragraph (d) of this section applies to both light-duty trucks and heavy-duty engines.

(2)(i) The results of all emission testing shall be supplied to the Administrator. The manufacturer shall furnish to the Administrator explanation for voiding any test. The Administrator will determine if voiding the test was appropriate based upon the explanation given by the manufacturer for the voided test. Tests between test points may be conducted as required by the Administrator. Data from all tests (including voided tests) may be submitted weekly to the Administrator, but shall be air posted or delivered to the Administrator within 7 days after completion of the test. In addition, all test data shall be compiled and provided to the Administrator in accordance with § 86.094–23. Where the Administrator conducts a test on a durability data vehicle at a prescribed test point, the results of that test will be used in the calculation of the deterioration factor.

(ii) The results of all emission tests shall be recorded and reported to the Administrator. These test results shall be rounded, in accordance with ASTM E 29–67 (reapproved 1980) (as referenced in paragraph (a)(6)(iii) of this section), to the number of decimal places contained in the applicable emission standard expressed to one additional significant figure.

(3) Whenever a manufacturer intends to operate and test a vehicle (or engine) which may be used for emission data, the manufacturer shall retain in its records all information concerning all emissions tests and maintenance, including vehicle (or engine) alterations to represent other vehicle (or engine) selections. This information shall be submitted, including the vehicle (or engine) description and specification information required by the Administrator, to the Administrator following the emission data test.

(4)–(5) [Reserved]

(6) Emission testing of any type with respect to any certification vehicle or engine other than that specified in this subpart is not allowed except as such testing may be specifically authorized by the Administrator.

[58 FR 4021, Jan. 12, 1993, as amended at 59 FR 36369, July 18, 1994; 62 FR 11082, Mar. 11, 1997; 62 FR 44875, Aug. 22, 1997]

§ 86.094–28 Compliance with emission standards.

(a)(1) Paragraph (a) of this section applies to lightduty vehicles.

(2) Each exhaust and evaporative emission standard (and family particulate emission limit, as appropriate) of § 86.094–8 applies to the emissions of vehicles for the appropriate useful life as defined in §§ 86.094–2 and 86.094–8.

(3) Since it is expected that emission control efficiency will change with mileage accumulation on the vehicle, the emission level of a vehicle which has accumulated mileage equal to the specified useful life will be used as the basis for determining compliance with the standard (or family particulate emission limit, as appropriate).

(4) The procedure for determining compliance of a new motor vehicle with exhaust and evaporative emission standards (or family particulate emission limit, as appropriate) is as described in paragraphs (a)(4) (i) through (v) of this section, except where specified by paragraph (a)(7) of this section for the Production AMA Durability Program.

(i) Separate emission deterioration factors shall be determined from the exhaust emission results of the durability data vehicle(s) for each engine-system combination. A separate evaporative emission deterioration factor shall be determined for each evaporative emission family-evaporative emission control system combination from the testing conducted by the manufacturer (gasoline-fueled and methanol-fueled vehicles only).

(A) The applicable results to be used, unless excluded by paragraph (a)(4)(i)(A)(*4*) of this section, in determining the exhaust emission deterioration factors for each engine-system combination shall be those described in paragraphs (a)(4)(i)(A) (*1*) through (*3*) of this section.

(*1*) All valid exhaust emission data from the tests required under § 86.094–26(a)(4) except the zero-mile tests. This shall include the official test results, as determined in § 86.094–29 for all tests conducted on all durability data vehicles of the combination selected under § 86.094–24(c) (including all vehicles elected to be operated by the manufacturer under § 86.094–24(c)(1)(ii)).

(*2*) All exhaust emission data from the tests conducted before and after the scheduled maintenance provided in § 86.094–25.

(*3*) All exhaust emission data from tests required by maintenance approved under § 86.094–25, in those cases where the Administrator conditioned his approval for the performance of such maintenance on the inclusion of such data in the deterioration factor calculation.

(*4*) The manufacturer has the option of applying an outlier test point procedure to completed durability data within its certification testing program for a given model year. The outlier procedure will be specified by the Administrator. For any pollutant, durability data test points that are identified as outliers shall not be included in the determination of deterioration factors if the manufacturer has elected this option. The manufacturer shall specify to the Administrator before the certification of the first engine family for that model year, if it intends to use the outlier procedure. The manufacturer may not change procedures after the first engine family of the model year is certified. Where the manufacturer chooses to apply both the outlier procedure and averaging (as allowed under § 86.094–26(a)(6)(i)) to the same data set, the outlier procedure shall be completed prior to applying the averaging procedure.

(B)(*1*) *Line crossing.* For each exhaust constituent to which a standard in § 86.094–8 applies, all applicable exhaust emission results shall be rounded to the nearest mile and plotted as a function of the mileage on the system. The best fit straight line, fitted by the method of least squares, shall be drawn through all these data points. The data for a given exhaust constituent will be acceptable for use in the calculation of deterioration factors only if the first official test point as determined in § 86.094–26(a)(4)(i)(C), the interpolated intermediate useful life mile point, and the interpolated full useful life mile point on this line, as applicable, are each less than or equal to the respective low-altitude standards provided in § 86.094–8. An exception to this where data are still acceptable is when a best fit straight line crosses an applicable standard but no data points exceeded the standard. This exception shall not apply when mileage accumulation has been curtailed before the durability useful life has been reached, under the provisions of § 86.094–26(a)(4)(i)(B).

(*2*) *Exhaust deterioration factor determination.* Multiplicative exhaust emission deterioration factors shall be calculated for each standard and for each engine-system combination from points on the regression line derived in paragraph (a)(4)(i)(B)(*1*) of this section, and in accordance with paragraphs (a)(4)(i)(B)(2) (*i*) and (*ii*) of this section.

(*i*) Factor=Exhaust emissions at the useful life mileage for that standard divided by exhaust emissions at 4,000 miles.

(*ii*) These interpolated values shall be carried out to a minimum of four places to the right of the decimal point before dividing one by the other to determine the deterioration factor. The results shall be rounded to three places to the right of the decimal point in accordance with ASTM E 29–67 (reapproved 1980) (''Standard recommended practice for indicating which places of figures are to be considered significant in specified limiting values,'' American Society for Testing and Materials). This incorporation by reference was approved by the Director of the Federal Register in acccordance with 5 U.S.C. 552(a) and 1 CFR part 51. Copies may be obtained from American Society for Testing and Materials, 1916 Race St., Philadelphia, PA 19103. Copies may be inspected at the U.S. Environmental Protection Agency, Air Docket Section, room M–1500, 401 M Street SW., Washington, DC 20460 or at the Office of the Federal Register, 800 North Capitol Street, NW., suite 700, Washington, DC.

(*iii*) When calculating intermediate and full useful life deterioration factors all data points should be included

in the calculations, except that total hydrocarbon (THC) test points beyond the 50,000-mile (useful life) test point shall not be included in the calculations.

(*iv*) The calculation specified in paragraph (a)(4)(i)(B)(*2*) of this section may be modified with advance approval of the Administrator for engine-system combinations which are certified under the Alternative Service Accumulation Durability Program specified in § 86.094–13(e).

(C) *Evaporative deterioration factor determination.* An evaporative emissions deterioration factor (gasoline-fueled and methanol-fueled vehicles only) shall be determined from the testing conducted as described in § 86.094–21(b)(4)(i) and in accordance with paragraphs (a)(4)(i)(C) (*1*) and (*2*) of this section, for each evaporative emission family-evaporative emission control system combination to indicate the evaporative emission level at the applicable useful life relative to the evaporative emission level at 4,000 miles.

(*1*) Factor=Evaporative emission level at the useful life mileage for that standard minus the evaporative emission level at 4,000 miles.

(*2*) The factor shall be established to a minimum of two places to the right of the decimal.

(ii)(A)(*1*) The official exhaust emission test results for each applicable exhaust emission standard for each emission data vehicle at the selected test point shall be multiplied by the appropriate deterioration factor: *Provided,* That if a deterioration factor as computed in paragraph (a)(4)(i)(B) of this section is less than one, that deterioration factor shall be one for the purposes of this paragraph.

(*2*) The calculation specified in paragraph (a)(4)(ii)(A)(*1*) of this section may be modified with advance approval of the Administrator for engine-system combinations which are certified under the Alternative Service Accumulation Durability Program specified in § 86.094–13(e).

(B) The official evaporative emission test results (gasoline-fueled and methanol-fueled vehicles only) for each evaporative emission data vehicle at the selected test point shall be adjusted by addition of the appropriate deterioration factor, provided that if a deterioration factor as computed in paragraph (a)(4)(i)(C) of this section is less than zero, that deterioration factor shall be zero for the purposes of this paragraph.

(iii) The emissions to compare with the standard (or the family particulate emission limit, as appropriate) shall be the adjusted emissions of paragraphs (a)(4)(ii) (A) and (B) of this section for each emission data vehicle. Before any emission value is compared with the standard (or the family particulate emission limit, as appropriate) it shall be rounded, in accordance with ASTM E 29–67 (reapproved 1980) (as referenced in paragraph (a)(4)(i)(B)(*2*)(*ii*) of this section), to two significant figures. The rounded emission values may not exceed the standard (or the family particulate emission limit, as appropriate).

(iv) Every test vehicle of an engine family must comply with the exhaust emission standards (or the family particulate emission limit, as appropriate), as determined in paragraph (a)(4)(iii) of this section, before any vehicle in that family may be certified.

(v) Every test vehicle of an evaporative emission family must comply with the evaporative emission standard, as determined in paragraph (a)(4)(iii) of this section, before any vehicle in that family may be certified.

(5) If a manufacturer chooses to change the level of any family particulate emission limit(s) in the particulate averaging program, compliance with the new limit(s) must be based upon existing certification data.

(6) If a manufacturer chooses to participate in the diesel particulate averaging program, the production-weighted average of the family particulate emission limits of all affected engine families must comply with the particulate standards in § 86.094–8(a)(1)(iv), or the composite particulate standard defined in § 86.094–2, as appropriate, at the end of the production year.

(7) The procedure to determine the compliance of new motor vehicles in the Production AMA Durability Program described in § 86.094–13 is the same as described in paragraphs (a)(4) (iii) through (v) of this section. For the engine families that are included in the Production AMA Durability Program,

the exhaust emission deterioration factors used to determine compliance shall be those that the Administrator has approved under § 86.094–13. The evaporative emission deterioration factor for each evaporative emission family shall be determined and applied according to paragraph (a)(4) of this section. The procedures to determine the minimum exhaust emission deterioration factors required under § 86.094–13(d) are as described in paragraphs (a)(7) (i) and (ii) of this section.

(i) Separate deterioration factors shall be determined from the exhaust emission results of the durability data vehicles for each emission standard applicable under § 86.094–8, for each engine family group. The evaporative emission deterioration factor for each evaporative family will be determined and applied in accordance with paragraph (a)(4) of this section.

(ii) The deterioration factors for each engine family group shall be determined by the Administrator using historical durability data from as many as three previous model years. These data will consist of deterioration factors generated by durability data vehicles representing certified engine families and of deterioration factors from vehicles selected under § 86.094–24(h) . The Administrator shall determine how these data will be combined for each engine family group.

(A) The test result to be used in the calculation of each deterioration factor to be combined for each engine family group shall be those test results specified in paragraph (a)(4)(i)(A) of this section.

(B) For each durability data vehicle selected under § 86.094–24(h), all applicable exhaust emission results shall be plotted as a function of the mileage on the system rounded to the nearest mile, and the best fit straight lines, fitted by method of least squares, shall be drawn through all these data points. The exhaust deterioration factor for each durability data vehicle shall be calculated as specified in paragraph (a)(4)(i)(B) of this section.

(C) *Line-crossing.* The line-crossing criteria of § 86.094–28 (a)(4)(i)(B) apply.

(*1*) The Administrator will not accept for certification line-crossing data from preproduction durability data vehicles selected under § 86.094–24(c).

(*2*) The Administrator will not accept for certification line-crossing data from production durability data vehicles selected under § 86.094–24(h)(1) unless the 4,000-mile test result multiplied by the engine family group deterioration factor does not exceed the applicable emission standards. The deterioration factors used for this purpose shall be those that were used in the certification of the production vehicle. Manufacturers may calculate this product immediately after the 4,000-mile test of the vehicle. If the product exceeds the applicable standards, the manufacturer may, with the approval of the Administrator, discontinue the vehicle and substitute a new vehicle. The manufacturer may continue the original vehicle, but the data will not be acceptable if line crossing occurs.

(b)(1) Paragraph (b) of this section applies to light-duty trucks.

(2) Each exhaust and evaporative emission standard (and family particulate emission limit, as appropriate) of § 86.094–9 applies to the emissions of vehicles for the appropriate useful life as defined in §§ 86.094–2 and 86.094–9.

(3) Since emission control efficiency generally decreases with the accumulation of mileage on the vehicle, deterioration factors will be used in combination with emission data vehicle test results as the basis for determining compliance with the standards (or family emission limits, as appropriate).

(4)(i) Paragraph (b)(4) of this section describes the procedure for determining compliance of a new vehicle with exhaust emission standards (or family emission limits, as appropriate), based on deterioration factors. If the manufacturer certifies under the Standard Self-Approval Program as specified in § 86.094–13(f), the manufacturer supplies the deterioration factors. If the manufacturer certifies under the Alternative Service Accumulation Durability Program as specified in § 86.094–13(e), the applicable procedure for the determination of deterioration factors for light-duty trucks is the same as that described in paragraph (a)(4) of this section for light-duty vehicles.

(ii) Separate exhaust emission deterioration factors, determined from

tests of vehicles, engines, subsystems, or components conducted by the manufacturer, shall be supplied for each standard and for each engine-system combination.

(iii) The official exhaust emission results for each applicable exhaust emission standard for each emission data vehicle at the selected test point shall be adjusted by multiplication by the appropriate deterioration factor. However, if the deterioration factor supplied by the manufacturer is less than one, it shall be one for the purposes of this paragraph.

(iv) The emission values to compare with the standards (or family emission limits, as appropriate) shall be the adjusted emission values of paragraph (b)(4)(iii) of this section rounded to two significant figures in accordance with ASTM E 29–67 (reapproved 1980) (as referenced in paragraph (a)(4)(i)(B)(*2*)(*ii*) of this section) for each emission data engine.

(5)(i) Paragraphs (b)(5)(i) (A) and (B) of this section apply only to manufacturers electing to participate in the particulate averaging program.

(A) If a manufacturer chooses to change the level of any family particulate emission limit(s), compliance with the new limit(s) must be based upon existing certification data.

(B) The production-weighted average of the family particulate emission limits of all applicable engine families, rounded to two significant figures in accordance with ASTM E 29–67 (reapproved 1980) (as referenced in paragraph (a)(4)(i)(B)(*2*)(*ii*) of this section), must comply with the particulate standards in § 86.094–9(a)(1)(iv) or (d)(1)(iv), or the composite particulate standard as defined in § 86.094–2, as appropriate, at the end of the product year.

(ii) Paragraphs (b)(5)(ii) (A) and (B) of this section apply only to manufacturers electing to participate in the NO_X averaging program.

(A) If a manufacturer chooses to change the level of any family NO_X emission limit(s), compliance with the new limit(s) must be based upon existing certification data.

(B) The production-weighted average of the family NO_X emission limits of all applicable engine families, rounded to two significant figures in accordance with ASTM E 29–67 (reapproved 1980) (as referenced in paragraph (a)(4)(i)(B)(*2*)(*ii*) of this section), must comply with the NO_X emission standards of § 86.094–9(a)(1)(iii) (A) or (B) of § 86.094–9(d)(1)(iii) (A) or (B), or the composite NO_X standard as defined in § 86.094–2, at the end of the product year.

(6) [Reserved]

(7)(i) Paragraph (b)(7) of this section describes the procedure for determining compliance of a new vehicle with evaporative emission standards. The procedure described here shall be used for all vehicles in all model years.

(ii) The manufacturer shall determine, based on testing described in § 86.091–21(b)(4)(i), and supply an evaporative emission deterioration factor for each evaporative emission family-evaporative emission control system combination. The factor shall be calculated by subtracting the emission level at the selected test point from the emission level at the useful life point.

(iii) The official evaporative emission test results for each evaporative emission data vehicle at the selected test point shall be adjusted by the addition of the appropriate deterioration factor. However, if the deterioration factor supplied by the manufacturer is less than zero, it shall be zero for the purposes of this paragraph.

(iv) The emission value to compare with the standards shall be the adjusted emission value of paragraph (b)(7)(iii) of this section rounded to two significant figures in accordance with ASTM E 29–67 (reapproved 1980) (as referenced in paragraph (a)(4)(i)(B)(*2*)(*ii*) of this section) for each evaporative emission data vehicle.

(8) Every test vehicle of an engine family must comply with all applicable standards (and family emission limits, as appropriate), as determined in paragraphs (b)(4)(iv) and (b)(7)(iv) of this section, before any vehicle in that family will be certified.

(c)(1) Paragraph (c) of this section applies to heavy-duty engines.

(2) The exhaust emission standards (or family emission limits, as appropriate) for Otto-cycle engines in § 86.094–10 or for diesel-cycle engines in

§ 86.094–11 apply to the emissions of engines for their useful life.

(3) Since emission control efficiency generally decreases with the accumulation of service on the engine, deterioration factors will be used in combination with emission data engine test results as the basis for determining compliance with the standards.

(4)(i) Paragraph (c)(4) of this section describes the procedure for determining compliance of an engine with emission standards (or family emission limits, as appropriate), based on deterioration factors supplied by the manufacturer.

(ii) Separate exhaust emission deterioration factors, determined from tests of engines, subsystems, or components conducted by the manufacturer, shall be supplied for each engine-system combination. For Otto-cycle engines, separate factors shall be established for transient HC (THCE), CO, and NO_X; and idle CO, for those engines utilizing aftertreatment technology (e.g., catalytic converters). For diesel-cycle engines, separate factors shall be established for transient HC (THCE), CO, NO_X, and exhaust particulate. For diesel-cycle smoke testing, separate factors shall also be established for the acceleration mode (designated as ''A''), the lugging mode (designated as ''B''), and peak opacity (designated as ''C'').

(iii)(A) Paragraphs (c)(4)(iii)(A) (*1*) and (*2*) of this section apply to Otto-cycle heavy-duty engines.

(*1*) *Otto-cycle heavy-duty engines not utilizing aftertreatment technology (e.g., catalytic converters).* For transient HC (THCE), CO, and NO_X, the official exhaust emission results for each emission data engine at the selected test point shall be adjusted by the addition of the appropriate deterioration factor. However, if the deterioration factor supplied by the manufacturer is less than zero, it shall be zero for the purposes of this paragraph.

(*2*) *Otto-cycle heavy-duty engines utilizing aftertreatment technology (e.g., catalytic converters).* For transient HC (THCE), CO, and NO_X, and for idle CO, the official exhaust emission results for each emission data engine at the selected test point shall be adjusted by multiplication by the appropriate deterioration factor. However, if the deterioration factor supplied by the manufacturer is less than one, it shall be one for the purposes of this paragraph.

(B) Paragraph (c)(4)(iii)(B) of this section applies to diesel-cycle heavy-duty engines.

(*1*) *Diesel-cycle heavy-duty engines not utilizing aftertreatment technology (e.g., particulate traps).* For transient HC (THCE), CO, NO_X, and exhaust particulate, the official exhaust emission results for each emission data engine at the selected test point shall be adjusted by the addition of the appropriate deterioration factor. However, if the deterioration factor supplied by the manufacturer is less than zero, it shall be zero for the purposes of this paragraph.

(*2*) *Diesel-cycle heavy-duty engines utilizing aftertreatment technology (e.g., particulate traps).* For transient HC (THCE), CO, NO_X, and exhaust particulate, the official exhaust emission results for each emission data engine at the selected test point shall be adjusted by multiplication by the appropriate deterioration factor. However, if the deterioration factor supplied by the manufacturer is less than one, it shall be one for the purposes of this paragraph.

(*3*) *Diesel-cycle heavy-duty engines only.* For acceleration smoke (''A''), lugging smoke (''B''), and peak smoke (''C''), the official exhaust emission results for each emission data engine at the selected test point shall be adjusted by the addition of the appropriate deterioration factor. However, if the deterioration factor supplied by the manufacturer is less than zero, it shall be zero for the purposes of this paragraph.

(iv) The emission values to compare with the standards (or family emission limits, as appropriate) shall be the adjusted emission values of paragraph (c)(4)(iii) of this section, rounded to the same number of significant figures as contained in the applicable standard in accordance with ASTM E 29–67 (reapproved 1980) (as referenced in paragraph (a)(4)(i)(B)(*2*)(*ii*) of this section), for each emission data engine.

(5)–(6) [Reserved]

(7) Every test engine of an engine family must comply with all applicable standards (or family emission limits,

as appropriate), as determined in paragraph (c)(4)(iv) of this section, before any engine in that family will be certified.

(d)(1) Paragraph (d) of this section applies to heavy-duty vehicles equipped with gasoline-fueled or methanol-fueled engines.

(2) The applicable evaporative emission standard in § 86.091–10 or § 86.094–11 applies to the emissions of vehicles for their useful life.

(3)(i) For vehicles with a GVWR of up to 26,000 pounds, because it is expected that emission control efficiency will change during the useful life of the vehicle, an evaporative emission deterioration factor shall be determined from the testing described in § 86.088–23(b)(3) for each evaporative emission family-evaporative emission control system combination to indicate the evaporative emission control system deterioration during the useful life of the vehicle (minimum 50,000 miles). The factor shall be established to a minimum of two places to the right of the decimal.

(ii) For vehicles with a GVWR of greater than 26,000 pounds, because it is expected that emission control efficiency will change during the useful life of the vehicle, each manufacturer's statement as required in § 86.094–23(b)(4)(ii) shall include, in accordance with good engineering practice, consideration of control system deterioration.

(4) The evaporative emission test results, if any, shall be adjusted by the addition of the appropriate deterioration factor, provided that if the deterioration factor as computed in paragraph (d)(3) of this section is less than zero, that deterioration factor shall be zero for the purposes of this paragraph.

(5) The emission level to compare with the standard shall be the adjusted emission level of paragraph (d)(4) of this section. Before any emission value is compared with the standard, it shall be rounded, in accordance with ASTM E 29–67 (reapproved 1980) (as referenced in paragraph (a)(4)(i)(B)(*2*)(*ii*) of this section), to two significant figures. The rounded emission values may not exceed the standard.

(6) Every test vehicle of an evaporative emission family must comply with the evaporative emission standard, as determined in paragraph (d)(5) of this section, before any vehicle in that family may be certified.

[58 FR 4025, Jan. 12, 1993]

§ 86.094–30 Certification.

(a)(1)(i) If, after a review of the test reports and data submitted by the manufacturer, data derived from any inspection carried out under § 86.091–7(c) and any other pertinent data or information, the Administrator determines that a test vehicle(s) (or test engine(s)) meets the requirements of the Act and of this subpart, he will issue a certificate of conformity with respect to such vehicle(s) (or engine(s)) except in cases covered by paragraphs (a)(1)(ii) and (c) of this section.

(ii) *Gasoline-fueled and methanol-fueled heavy-duty vehicles.* If, after a review of the statement(s) of compliance submitted by the manufacturer under § 86.094–23(b)(4) and any other pertinent data or information, the Administrator determines that the requirements of the Act and this subpart have been met, he will issue one certificate of conformity per manufacturer with respect to the evaporative emission family(ies) covered by paragraph (c) of this section.

(2) Such certificate will be issued for such period not to exceed one model year as the Administrator may determine and upon such terms as he may deem necessary or appropriate to assure that any new motor vehicle (or new motor vehicle engine) covered by the certificate will meet the requirements of the Act and of this part.

(3)(i) One such certificate will be issued for each engine family. For gasoline-fueled and methanol-fueled light-duty vehicles and light-duty trucks, one such certificate will be issued for each engine family evaporative emission family combination.

(A) *Light-duty vehicles.* Each certificate will certify compliance with no more than one set of in-use and certification standards (or family emission limits, as appropriate).

(B) *Light-duty trucks.* Each certificate will certify compliance with no more than one set of in-use and certification standards (or family emission limits, as appropriate), except where there are both low-altitude standards and high

altitude standards applicable. The certificate shall state that it covers vehicles sold or delivered to an ultimate purchaser for principal use at a designated high-altitude location only if the vehicle conforms in all material respects to the design specifications that apply to those vehicles described in the application for certification at high altitude.

(ii) For gasoline-fueled and methanol-fueled heavy-duty vehicles, one such certificate will be issued for each manufacturer and will certify compliance for those vehicles previously identified in that manufacturer's statement(s) of compliance as required in § 86.094–23(b)(4) (i) and (ii).

(iii) For diesel-cycle light-duty vehicles and light-duty trucks, or diesel-cycle heavy-duty engines, included in the applicable particulate averaging program, the manufacturer may at any time during production elect to change the level of any family particulate emission limit by demonstrating compliance with the new limit as described in §§ 86.094–28(a)(6) and 86.094–28(b)(5)(i) . New certificates issued under this paragraph will be applicable only for vehicles (or engines) produced subsequent to the date of issuance.

(iv) For light-duty trucks or heavy-duty engines included in the applicable NO_X averaging program, the manufacturer may at any time during production elect to change the level of any family NO_X emission limit by demonstrating compliance with the new limit as described in § 86.094–28(b)(5)(ii). New certificates issued under this paragraph will be applicable only for vehicles (or engines) produced subsequent to the day of issue.

(4)(i) The adjustment or modification of any light-duty truck in accordance with instructions provided by the manufacturer for the altitude where the vehicle is principally used will not be considered a violation of section 203(a)(3) of the Clean Air Act (42 U.S.C. 7522 (a)(3)).

(ii) A violation of section 203(a)(1) of the Clean Air Act (42 U.S.C. 7522(a)(1)) occurs when a manufacturer sells or delivers to an ultimate purchaser any light-duty vehicle or light-duty truck, subject to the regulations under the Act, under any of the conditions specified in the remainder of this paragraph.

(A) When a light-duty vehicle or light-duty truck is not configured to meet high-altitude requirements:

(*1*) At a designated high-altitude location, unless such manufacturer has reason to believe that such vehicle will not be sold to an ultimate purchaser for principal use at a designated high-altitude location; or

(*2*) At a location other than a designated high-altitude location, when such manufacturer has reason to believe that such motor vehicle will be sold to an ultimate purchaser for principal use at a designated high-altitude location.

(B) When a light-duty vehicle is not configured to meet low-altitude requirements, as provided in § 86.094–8(i) :

(*1*) At a designated low-altitude location, unless such manufacturer has reason to believe that such vehicle will not be sold to an ultimate purchaser for principal use at a designated low-altitude location; or

(*2*) At a location other than a designated low-altitude location, when such manufacturer has reason to believe that such motor vehicle will be sold to an ultimate purchaser for principal use at a designated low-altitude location.

(iii) A manufacturer shall be deemed to have reason to believe that a light-duty vehicle that has been exempted from compliance with emission standards at high-altitude, or a light-duty truck which is not configured to meet high-altitude requirements, will not be sold to an ultimate purchaser for principal use at a designated high-altitude location if the manufacturer has informed its dealers and field representatives about the terms of these high-altitude regulations, has not caused the improper sale itself, and has taken reasonable action which shall include, but not be limited to, either paragraph (a)(4)(iii) (A) or (B), and paragraph (a)(4)(iii)(C) of this section:

(A) Requiring dealers in designated high-altitude locations to submit written statements to the manufacturer signed by the ultimate purchaser that a vehicle which is not configured to meet high-altitude requirements will not be used principally at a designated

high-altitude location; requiring dealers in counties contiguous to designated high-altitude locations to submit written statements to the manufacturer, signed by the ultimate purchaser who represents to the dealer in the normal course of business that he or she resides in a designated high-altitude location, that a vehicle which is not configured to meet high-altitude requirements will not be used principally at a designated high-altitude location; and for each sale or delivery of fleets of ten or more such vehicles in a high-altitude location or in counties contiguous to high-altitude locations, requiring either the selling dealer or the delivering dealer to submit written statements to the manufacturer, signed by the ultimate purchaser who represents to the dealer in the normal course of business that he or she resides in a designated high-altitude location, that a vehicle which is not configured to meet high-altitude requirements will not be used principally at a designated high-altitude location. In addition, the manufacturer will make available to EPA, upon reasonable written request (but not more frequently than quarterly, unless EPA has demonstrated that it has substantial reason to believe that an improperly configured vehicle has been sold), sales, warranty, or other information pertaining to sales of vehicles by the dealers described above maintained by the manufacturer in the normal course of business relating to the altitude configuration of vehicles and the locations of ultimate purchasers; or

(B) Implementing a system which monitors factory orders of low-altitude vehicles by high-altitude dealers, or through other means, identifies dealers that may have sold or delivered a vehicle not configured to meet the high-altitude requirements to an ultimate purchaser for principal use at a designated high-altitude location; and making such information available to EPA upon reasonable written request (but not more frequently than quarterly, unless EPA has demonstrated that it has substantial reason to believe that an improperly configured vehicle has been sold); and

(C) Within a reasonable time after receiving written notice from EPA or a State or local government agency that a dealer may have improperly sold or delivered a vehicle not configured to meet the high-altitude requirements to an ultimate purchaser residing in a designated high-altitude location, or based on information obtained pursuant to paragraph (a)(4)(iii) of this section that a dealer may have improperly sold or delivered a significant number of such vehicles to ultimate purchasers so residing, reminding the dealer in writing of the requirements of these regulations, and, where appropriate, warning the dealer that sale by the dealer of vehicles not configured to meet high-altitude requirements may be contrary to the terms of its franchise agreement with the manufacturer and the dealer certification requirements of § 85.2108 of this chapter.

(iv) A manufacturer shall be deemed to have reason to believe that a light-duty vehicle which has been exempted from compliance with emission standards at low-altitude, as provided in § 86.094–8(i), will not be sold to an ultimate purchaser for principal use at a designated low-altitude location if the manufacturer has informed its dealers and field representatives about the terms of the high-altitude regulations, has not caused the improper sale itself, and has taken reasonable action which shall include, but not be limited to, either paragraph (a)(4)(iv) (A) or (B), and (a)(4)(iv)(C) of this section:

(A) Requiring dealers in designated low-altitude locations to submit written statements to the manufacturer signed by the ultimate purchaser that a vehicle which is not configured to meet low-altitude requirements will not be used principally at a designated low-altitude location; requiring dealers in counties contiguous to designated low-altitude locations to submit written statements to the manufacturer, signed by the ultimate purchaser who represents to the dealer in the normal course of business that he or she resides in a designated low-altitude location, that a vehicle which is not configured to meet low-altitude requirements will not be used principally at a designated low-altitude location; and for each sale or delivery of fleets of ten or more such vehicles in a low-altitude location or in counties contiguous to

low-altitude locations, requiring either the selling dealer or the delivering dealer to submit written statements to the manufacturer, signed by the ultimate purchaser who represents to the dealer in the normal course of business that he or she resides in a designated low-altitude location, that a vehicle which is not configured to meet low-altitude requirements will not be used principally at a designated high-altitude location. In addition, the manufacturer will make available to EPA, upon reasonable written request (but not more frequently than quarterly, unless EPA has demonstrated that it has substantial reason to believe that an improperly configured vehicle has been sold), sales, warranty, or other information pertaining to sales of vehicles by the dealers described above maintained by the manufacturer in the normal course of business relating to the altitude configuration of vehicles and the locations of ultimate purchasers; or

(B) Implementing a system which monitors factory orders of high-altitude vehicles by low-altitude dealers, or through other means, identifies dealers that may have sold or delivered a vehicle not configured to meet the low-altitude requirements to an ultimate purchaser for principal use at a designated low-altitude location; and making such information available to EPA upon reasonable written request (but not more frequently than quarterly, unless EPA has demonstrated that it has substantial reason to believe that an improperly configured vehicle has been sold); and

(C) Within a reasonable time after receiving written notice from EPA or a state or local government agency that a dealer may have improperly sold or delivered a vehicle not configured to meet the low-altitude requirements to an ultimate purchaser residing in a designated low-altitude location, or based on information obtained pursuant to paragraph (a)(4)(iv) of this section that a dealer may have improperly sold or delivered a significant number of such vehicles to ultimate purchasers so residing, reminding the dealer in writing of the requirements of these regulations, and, where appropriate, warning the dealer that sale by the dealer of vehicles not configured to meet low-altitude requirements may be contrary to the terms of its franchise agreement with the manufacturer and the dealer certification requirements of § 85.2108 of this chapter.

(5)(i) For the purpose of paragraph (a) of this section, a ''designated high-altitude location'' is any county which has substantially all of its area located above 1,219 meters (4,000 feet) and:

(A) Requested and extension past the attainment date of December 31, 1982, for compliance with either the National Ambient Air Quality Standards for carbon monoxide or ozone, as indicated in part 52 (Approval and Promulgation of Implementation Plans) of this title; or

(B) Is in the same state as a county designated as a high-altitude location according to paragraph (a)(5)(i)(A) of this section.

(ii) The designated high-altitude locations defined in paragraph (a)(5)(i) of this section are listed below:

STATE OF COLORADO

Adams	Kit Carson
Alamosa	Lake
Arapahoe	La Plata
Archuleta	Larimer
Boulder	Las Animas
Chaffee	Lincoln
Cheyenne	Mesa
Clear Creek	Mineral
Conejos	Moffat
Costilla	Montezuma
Crowley	Montrose
Custer	Morgan
Delta	Otero
Denver	Ouray
Dolores	Park
Douglas	Pitkin
Eagle	Pueblo
Elbert	Rio Blanco
El Paso	Rio Grande
Fremont	Routt
Garfield	Saguache
Gilpin	San Juan
Grand	San Miguel
Gunnison	Summit
Hinsdale	Teller
Huerfano	Washington
Jackson	Weld
Jefferson	

STATE OF NEVADA

Carson City	Eureka
Douglas	Humboldt
Elko	Lander
Esmeralda	Lincoln

Lyon	Storey
Mineral	Washoe
Nye	White Pine
Pershing	

STATE OF NEW MEXICO

Bernalillo	Otero
Catron	Rio Arriba
Colfax	Roosevelt
Curry	Sandoval
De Baca	San Juan
Grant	San Miguel
Guadalupe	Santa Fe
Harding	Sierra
Hidalgo	Socorro
Lincoln	Taos
Los Alamos	Torrance
Luna	Union
McKinley	Valencia
Mora	

STATE OF UTAH

Beaver	Morgan
Box Elder	Piute
Cache	Rich
Carbon	Salt Lake
Daggett	San Juan
Davis	Sanpete
Duchesne	Sevier
Emery	Summit
Garfield	Tooele
Grand	Uintah
Iron	Utah
Juab	Wasatch
Kane	Wayne
Millard	Weber

(iii) For the purpose of paragraph (a) of this section, a ''designated low-altitude location'' is any county which has substantially all of its area located below 1,219 meters (4,000 feet).

(iv) The designated low-altitude locations so defined include all counties in the United States which are not listed in either paragraph (a)(5)(ii) of this section or in the list below:

STATE OF ARIZONA

Apache	Navajo
Cochise	Yavapai
Coconino	

STATE OF IDAHO

Bannock	Clark
Bear Lake	Custer
Bingham	Franklin
Blaine	Fremont
Bonneville	Jefferson
Butte	Lemhi
Camas	Madison
Caribou	Minidoka
Cassia	
Oneida	Treton
Power	Valley

STATE OF MONTANA

Beaverhead	Meagher
Deer Lodge	Park
Gallatin	Powell
Jefferson	Silver Bow
Judith Basin	Wheatland
Madison	

STATE OF NEBRASKA

Banner	Kimball
Cheyenne	Sioux

STATE OF OREGON

Harney	Lake
Klamath	

STATE OF TEXAS

Jeff Davis	Parmer
Hudspeth	

STATE OF WYOMING

Albany	Natrona
Campbell	Niobrara
Carbon	Park
Converse	Platte
Fremont	Sublette
Goshen	Sweetwater
Hot Springs	Teton
Johnson	Uinta
Laramie	Washakie
Lincoln	Weston

(6) Catalyst-equipped vehicles, otherwise covered by a certificate, which are driven outside the United States, Canada, and Mexico will be presumed to have been operated on leaded gasoline resulting in deactivation of the catalysts. If these vehicles are imported or offered for importation without retrofit of the catalyst, they will be considered not to be within the coverage of the certificate unless included in a catalyst control program operated by a manufacturer or a United States Government agency and approved by the Administrator.

(7) For incomplete light-duty trucks, a certificate covers only those new motor vehicles which, when completed by having the primary load-carrying device or container attached, conform to the maximum curb weight and frontal area limitations described in the application for certification as required in § 86.094–21(d).

(8) For heavy-duty engines, a certificate covers only those new motor vehicle engines installed in heavy-duty vehicles which conform to the minimum gross vehicle weight rating, curb weight, or frontal area limitations for heavyduty vehicles described in § 86.082–2.

(9) For incomplete gasoline-fueled and methanol-fueled heavy-duty vehicles a certificate covers only those new motor vehicles which, when completed, conform to the nominal maximum fuel tank capacity limitations as described in the application for certification as required in § 86.094–21(e).

(10)(i) For diesel-cycle light-duty vehicle and diesel-cycle light-duty truck families which are included in a particulate averaging program, the manufacturer's production-weighted average of the particulate emission limits of all engine families in a participating class or classes shall not exceed the applicable diesel-cycle particulate standard, or the composite particulate standard defined in § 86.090–2 as appropriate, at the end of the model year, as determined in accordance with this part. The certificate shall be void ab initio for those vehicles causing the production-weighted FEL to exceed the particulate standard.

(ii) For all heavy-duty diesel-cycle engines which are included in the particulate averaging, trading, or banking programs under § 86.094–15, the provisions of paragraphs (a)(10)(ii) (A) through (C) of this section apply.

(A) All certificates issued are conditional upon the manufacturer complying with the provisions of § 86.094–15 and the averaging, trading, and banking related provision of other applicable sections, both during and after the model year production.

(B) Failure to comply with all provisions of § 86.094–15 will be considered to be a failure to satisfy the conditions upon which the certificate was issued, and the certificate may be deemed void ab initio.

(C) The manufacturer shall bear the burden of establishing to the satisfaction of the Administrator that the conditions upon which the certificate was issued were satisfied or excused.

(11)(i) For light-duty truck families which are included in a NO_X averaging program, the manufacturer's production-weighted average of the NO_X emission limits of all such engine families shall not exceed the applicable NO_X emission standard, or the composite NO_X emission standard defined in § 86.088–2, as appropriate, at the end of the model year, as determined in accordance with this part. The certificate shall be void ab initio for those vehicles causing the production-weighted FEL to exceed the NO_X standard.

(ii) For all heavy duty engines which are included in the NO_X averaging, trading, or banking programs under § 86.091–15, the provisions of paragraphs (a)(11)(ii) (A) through (C) of this section apply.

(A) All certificates issued are conditional upon the manufacturer complying with the provisions of § 86.094–15 and the averaging, trading, and banking related provision of other applicable sections, both during and after the model year production.

(B) Failure to comply with all provisions of § 86.094–15 will be considered to be a failure to satisfy the conditions upon which the certificate was issued, and the certificate may be deemed void ab initio.

(C) The manufacturer shall bear the burden of establishing to the satisfaction of the Administrator that the ''conditions upon which the certificate was issued were satisfied or excused.

(12) For all light-duty vehicles certified to standards under § 86.094–8 or to which standards under § 86.708–94 are applicable, the provisions of paragraphs (a)(12) (i) through (iii) of this section apply.

(i) All certificates issued are conditional upon the manufacturer complying with all provisions of §§ 86.094–8 and 86.708–94 both during and after model year production.

(ii) Failure to meet the required implementation schedule sales percentages as specified in §§ 86.094–8 and § 86.708–94 will be considered to be a failure to satisfy the conditions upon which the certificate(s) was issued and the vehicles sold in violation of the implementation schedule shall not be covered by the certificate.

(iii) The manufacturer shall bear the burden of establishing to the satisfaction of the Administrator that the conditions upon which the certificate was issued were satisfied.

(13) For all light-duty trucks certified to standards under § 86.094–9 and to which standards under § 86.709–94 are applicable, the provisions of paragraphs (a)(13) (i) through (iii) this section apply.

(i) All certificates issued are conditional upon the manufacturer complying with all provisions of §§ 86.094–9 and 86.709–94 both during and after model year production.

(ii) Failure to meet the required implementation schedule sales percentages as specified in §§ 86.094–9 and 86.709–94 will be considered to be a failure to satisfy the conditions upon which the certificate(s) was issued and the individual vehicles sold in violation of the implementation schedule shall not be covered by the certificate.

(iii) The manufacturer shall bear the burden of establishing to the satisfaction of the Administrator that the conditions upon which the certificate was issued were satisfied.

(14) For all light-duty vehicles and light-duty trucks certified with an Alternative Service Accumulation Durability Program under § 86.094–13(e), paragraphs (a)(14) (i) through (iii) of this section apply.

(i) All certificates issued are conditional upon the manufacturer performing the in-use verification program pursuant to the agreement described in § 86.094–13(e)(8).

(ii) Failure to fully comply with all the terms of the in-use verification program pursuant to the agreement described in § 86.094–13(e)(8) will be considered a failure to satisfy the conditions upon which the certificate was issued. A vehicle or truck will be considered to be covered by the certificate only if the manufacturer fulfills the conditions upon which the certificate is issued.

(iii) The manufacturer shall bear the burden of establishing to the satisfaction of the Administrator that the conditions upon which the certificate was issued were satisfied.

(b)(1) The Administrator will determine whether a vehicle (or engine) covered by the application complies with applicable standards (or family emission limits, as appropriate) by observing the following relationships: in paragraphs (b)(1) (i) through (iv) of this section:

(i) *Light-duty vehicles.* (A) The durability data vehicle(s) selected under § 86.094–24(c)(1)(i) shall represent all vehicles of the same engine system combination.

(B) The emission data vehicle(s) selected under § 86.094–24(b)(1) (ii) through (iv) shall represent all vehicles of the same engine-system combination as applicable.

(C) The emission data vehicle(s) selected under § 86.094–24(b)(1)(vii) (A) and (B) shall represent all vehicles of the same evaporative control system within the evaporative family.

(ii) *Light-duty trucks.* (A) The emission data vehicle(s) selected under § 86.094–24(b)(1)(ii), shall represent all vehicles of the same engine-system combination as applicable.

(B) The emission data vehicle(s) selected under § 86.094–24 (b)(I)(vii) (A) and (B) shall represent all vehicles of the same evaporative control system within the evaporative family.

(C) The emission data vehicle(s) selected under § 86 .09424(b) (1) (v) shall represent all vehicles of the same enginesystem combination as applicable.

(D) The emission data vehicle(s) selected under § 86.094–24(b)(1)(viii) shall represent all vehicles of the same evaporative control system within the evaporative emission family, as applicable.

(iii) *Heavy-duty engines.* (A) An Otto-cycle emission data test engine selected under § 86.094–24(b)(2)(iv) shall represent all engines in the same family of the same engine displacement-exhaust emission control system combination.

(B) An Otto-cycle emission data test engine selected under § 86.094–24(b)(2)(iii) shall represent all engines in the same engine family of the same engine displacement-exhaust emission control system combination.

(C) A diesel emission data test engine selected under § 86.094–24(b)(3)(ii) shall represent all engines in the same engine-system combination.

(D) A diesel emission data test engine selected under § 86.094–24(b)(3)(iii) shall represent all engines of that emission control system at the rated fuel delivery of the test engine.

(iv) Gasoline-fueled and methanol-fueled heavy-duty vehicles. A statement of compliance submitted under § 86.094–23(b)(4) (i) or (ii) shall represent all vehicles in the same evaporative emission family-evaporative emission control system combination.

(2) The Administrator will proceed as in paragraph (a) of this section with respect to the vehicles (or engines) belonging to an engine family or engine family-evaporative emission family combination (as applicable), all of which comply with all applicable standards (or family emission limits, as appropriate).

(3) If after a review of the test reports and data submitted by the manufacturer, data derived from any additional testing conducted pursuant to § 86.091–29, data or information derived from any inspection carried out under § 86.094–7(d) or any other pertinent data or information, the Administrator determines that one or more test vehicles (or test engines) of the certification test fleet do not meet applicable standards (or family emission limits, as appropriate), he will notify the manufacturer in writing, setting forth the basis for his determination. Within 30 days following receipt of the notification, the manufacturer may request a hearing on the Administrator's determination. The request shall be in writing, signed by an authorized representative of the manufacturer and shall include a statement specifying the manufacturer's objections to the Administrator's determination and data in support of such objections. If, after a review of the request and supporting data, the Administrator finds that the request raises a substantial factual issue, he shall provide the manufacturer a hearing in accordance with § 86.078–6 with respect to such issue.

(4) For light-duty vehicles and light-duty trucks the manufacturer may, at its option, proceed with any of the following alternatives with respect to an emission data vehicle determined not in compliance with all applicable standards (or family emission limits, as appropriate) for which it was tested:

(i) Request a hearing under § 86.078–6; or

(ii) Remove the vehicle configuration (or evaporative vehicle configuration, as applicable) which failed, from his application:

(A) If the failed vehicle was tested for compliance with exhaust emission standards (or family emission limits, as appropriate) only: The Administrator may select, in place of the failed vehicle, in accordance with the selection criteria employed in selecting the failed vehicle, a new emission data vehicle to be tested for exhaust emission compliance only; or

(B) If the failed vehicle was tested for compliance with both exhaust and evaporative emission standards: The Administrator may select, in place of the failed vehicle, in accordance with the selection criteria employed in selecting the failed vehicle, a new emission data vehicle which will be tested for compliance with both exhaust and evaporative emission standards. If one vehicle cannot be selected in accordance with the selection criteria employed in selecting the failed vehicle, then two vehicles may be selected (i.e., one vehicle to satisfy the exhaust emission vehicle selection criteria and one vehicle to satisfy the evaporative emission vehicle selection criteria). The vehicle selected to satisfy the exhaust emission vehicle selection criteria will be tested for compliance with exhaust emission standards (or family emission limits, as appropriate) only. The vehicle selected to satisfy the evaporative emission vehicle selection criteria will be tested for compliance with both exhaust and evaporative emission standards; or

(iii) Remove the vehicle configuration (or evaporative vehicle configuration, as applicable) which failed from the application and add a vehicle configuration(s) (or evaporative vehicle configuration(s), as applicable) not previously listed. The Administrator may require, if applicable, that the failed vehicle be modified to the new engine code (or evaporative emission code, as applicable) and demonstrate by testing that it meets applicable standards (or family emission limits, as appropriate)

for which it was originally tested. In addition, the Administrator may select, in accordance with the vehicle selection criteria given in § 86.094–24(b), a new emission data vehicle or vehicles. The vehicles selected to satisfy the exhaust emission vehicle selection criteria will be tested for compliance with exhaust emission standards (or family emission limits, as appropriate) only. The vehicles selected to satisfy the evaporative emission vehicle selection criteria will be tested for compliance with both exhaust and evaporative emission standards (or family emission limits, as appropriate); or

(iv) Correct a component or system malfunction and show that with a correctly functioning system or component the failed vehicle meets applicable standards (or family emission limits, as appropriate) for which it was originally tested. The Administrator may require a new emission data vehicle, of identical vehicle configuration (or evaporative vehicle configuration, as applicable) to the failed vehicle, to be operated and tested for compliance with the applicable standards (or family emission limits, as appropriate) for which the failed vehicle was originally tested.

(5) For heavy-duty engines the manufacturer may, at his option, proceed with any of the following alternatives with respect to any engine family represented by a test engine (s) determined not in compliance with applicable standards (or family emission limit, as appropriate):

(i) Request a hearing under § 86.078–6; or

(ii) Delete from the application for certification the engines represented by the failing test engine. (Engines so deleted may be included in a later request for certification under § 86.079–32.) The Administrator may then select in place of each failing engine an alternate engine chosen in accordance with selection criteria employed in selecting the engine that failed; or

(iii) Modify the test engine and demonstrate by testing that it meets applicable standards. Another engine which is in all material respect the same as the first engine, as modified, may then be operated and tested in accordance with applicable test procedures.

(6) If the manufacturer does not request a hearing or present the required data under paragraphs (b) (4) or (5) of this section (as applicable) of this section, the Administrator will deny certification.

(c)(1) Notwithstanding the fact that any certification vehicle(s) (or certification engine(s)) may comply with other provisions of this subpart, the Administrator may withhold or deny the issuance of a certificate of conformity (or suspend or revoke any such certificate which has been issued) with respect to any such vehicle(s) (or engine(s)) if:

(i) The manufacturer submits false or incomplete information in his application for certification thereof;

(ii) The manufacturer renders inaccurate any test data which he submits pertaining thereto or otherwise circumvents the intent of the Act, or of this part with respect to such vehicle (or engine);

(iii) Any EPA Enforcement Officer is denied access on the terms specified in § 86.091–7(d) to any facility or portion thereof which contains any of the following:

(A) The vehicle (or engine);

(B) Any components used or considered for use in its modification or buildup into a certification vehicle (or certification engine);

(C) Any production vehicle (or production engine) which is or will be claimed by the manufacturer to be covered by the certificate;

(D) Any step in the construction of a vehicle (or engine) described in paragraph (c)(iii)(C) of this section;

(E) Any records, documents, reports, or histories required by this part to be kept concerning any of the above; or

(iv) Any EPA Enforcement Officer is denied ''reasonable assistance'' (as defined in § 86.091–7(d) in examining any of the items listed in paragraph (c)(1)(iii) of this section.

(2) The sanctions of withholding, denying, revoking, or suspending of a certificate may be imposed for the reasons in paragraphs (c)(1) (i), (ii), (iii), or (iv) of this section only when the infraction is substantial.

(3) In any case in which a manufacturer knowingly submits false or inaccurate information or knowingly renders inaccurate or invalid any test data or commits any other fraudulent acts and such acts contribute substantially to the Administrator's decision to issue a certificate of conformity, the Administrator may deem such certificate void ab initio.

(4) In any case in which certification of a vehicle (or engine) is proposed to be withheld, denied, revoked, or suspended under paragraph (c)(1) (iii) or (iv) of this section, and in which the Administrator has presented to the manufacturer involved reasonable evidence that a violation of §86.091–7(d) in fact occurred, the manufacturer, if he wishes to contend that, even though the violation occurred, the vehicle (or engine) in question was not involved in the violation to a degree that would warrant withholding, denial, revocation, or suspension of certification under either paragraph (c)(1) (iii) or (iv) of this section, shall have the burden of establishing that contention to the satisfaction of the Administrator.

(5) Any revocation or suspension of certification under paragraph (c)(1) of this section shall:

(i) Be made only after the manufacturer concerned has been offered an opportunity for a hearing conducted in accordance with §86.078–6 hereof; and

(ii) Extend no further than to forbid the introduction into commerce of vehicles (or engines) previously covered by the certification which are still in the hands of the manufacturer, except in cases of such fraud or other misconduct as makes the certification invalid ab initlo.

(6) The manufacturer may request in the form and manner specified in paragraph (b)(3) of this section that any determination made by the Administrator under paragraph (c)(1) of this section to withhold or deny certification be reviewed in a hearing conducted in accordance with §86.078–6. If the Administrator finds, after a review of the request and supporting data, that the request raises a substantial factual issue, he will grant the request with respect to such issue.

(d)(1) For light-duty vehicles. Notwithstanding the fact that any vehicle configuration or engine family may be covered by a valid outstanding certificate of conformity, the Administrator may suspend such outstanding certificate of conformity in whole or in part with respect to such vehicle configuration or engine family if:

(i) The manufacturer refuses to comply with the provisions of a test order issued by the Administrator pursuant to §86.603; or

(ii) The manufacturer refuses to comply with any of the requirements of §86.603; or

(iii) The manufacturer submits false or incomplete information in any report or information provided pursuant to the requirements of §86.609; or

(iv) The manufacturer renders inaccurate any test data which he submits pursuant to §86.609; or

(v) Any EPA Enforcement Officer is denied the opportunity to conduct activities related to entry and access as authorized in §86.606 of this part and in a warrant or court order presented to the manufacturer or the party in charge of a facility in question; or

(vi) EPA Enforcement Officers are unable to conduct activities related to entry and access or to obtain ''reasonable assistance'' as authorized in §86.606 of this part because a manufacturer has located its facility in a foreign jurisdiction where local law prohibits those activities; or

(vii) The manufacturer refuses to or in fact does not comply with §86.604(a), §86.605, §86.607, §86.608, or §86.610.

(2) The sanction of suspending a certificate may not be imposed for the reasons in paragraph (d)(1) (i), (ii), or (vii) of this section where the refusal is caused by conditions and circumstances outside the control of the manufacturer which render it impossible to comply with those requirements.

(3) The sanction of suspending a certificate may be imposed for the reasons in paragraph (d)(1) (iii), (iv), or (v) of this section only when the infraction is substantial.

(4) In any case in which a manufacturer knowingly submitted false or inaccurate information or knowingly rendered inaccurate any test data or committed any other fraudulent acts,

and such acts contributed substantially to the Administrator's original decision not to suspend or revoke a certificate of conformity in whole or in part, the Administrator may deem such certificate void from the date of such fraudulent act.

(5) In any case in which certification of a vehicle is proposed to be suspended under paragraph (d)(1)(v) of this section and in which the Administrator has presented to the manufacturer involved reasonable evidence that a violation of § 86.606 in fact occurred, if the manufacturer wishes to contend that, although the violation occurred, the vehicle configuration or engine family in question was not involved in the violation to a degree that would warrant suspension of certification under paragraph (d)(1)(v) of this section, the manufacturer shall have the burden of establishing the contention to the satisfaction of the Administrator.

(6) Any suspension of certification under paragraph (d)(1) of this section shall:

(i) Be made only after the manufacturer concerned has been offered an opportunity for a hearing conducted in accordance with § 86.614; and

(ii) Not apply to vehicles no longer in the hands of the manufacturer.

(7) Any voiding of a certificate of conformity under paragraph (d)(4) of this section will be made only after the manufacturer concerned has been offered an opportunity for a hearing conducted in accordance with § 86.614.

(8) Any voiding of the certificate under § 86.091–30(a)(10) will be made only after the manufacturer concerned has been offered an opportunity for a hearing conducted in accordance with § 86.614.

(e) *For light-duty trucks and heavy-duty engines.* (1) Notwithstanding the fact that any vehicle configuration or engine family may be covered by a valid outstanding certificate of conformity, the Administrator may suspend such outstanding certificate of conformity in whole or in part with respect to such vehicle or engine configuration or engine family if:

(i) The manufacturer refuses to comply with the provisions of a test order issued by the Administrator pursuant to § 86.1003; or

(ii) The manufacturer refuses to comply with any of the requirements of § 86.1003; or

(iii) The manufacturer submits false or incomplete information in any report or information provided pursuant to the requirements of § 86.1009; or

(iv) The manufacturer renders inaccurate any test data submitted pursuant to § 86.1009; or

(v) Any EPA Enforcement Officer is denied the opportunity to conduct activities related to entry and access as authorized in § 86.1006 of this part and in a warrant or court order presented to the manufacturer or the party in charge of a facility in question; or

(vi) EPA Enforcement Officers are unable to conduct activities related to entry and access as authorized in § 86.1006 of this part because a manufacturer has located a facility in a foreign jurisdiction where local law prohibits those activities; or

(vii) The manufacturer refuses to or in fact does not comply with the requirements of §§ 86.1004(a), 86.1005, 86.1007, 86.1008, 86.1010, 86.1011, or 86.1013.

(2) The sanction of suspending a certificate may not be imposed for the reasons in paragraph (e)(1) (i), (ii), or (vii) of this section where such refusal or denial is caused by conditions and circumstances outside the control of the manufacturer which renders it impossible to comply with those requirements. Such conditions and circumstances shall include, but are not limited to, any uncontrollable factors which result in the temporary unavailability of equipment and personnel needed to conduct the required tests, such as equipment breakdown or failure or illness of personnel, but shall not include failure of the manufacturers to adequately plan for and provide the equipment and personnel needed to conduct the tests. The manufacturer will bear the burden of establishing the presence of the conditions and circumstances required by this paragraph.

(3) The sanction of suspending a certificate may be imposed for the reasons outlined in paragraph (e)(1) (iii), (iv), or (v) of this section only when the infraction is substantial.

(4) In any case in which a manufacturer knowingly submitted false or inaccurate information or knowingly rendered inaccurate any test data or committed any other fraudulent acts, and such acts contributed substantially to the Administrator's original decision not to suspend or revoke a certificate of conformity in whole or in part, the Administrator may deem such certificate void from the date of such fraudulent act.

(5) In any case in which certification of a light-duty truck or heavy-duty engine is proposed to be suspended under paragraph (e)(1)(v) of this section and in which the Administrator has presented to the manufacturer involved reasonable evidence that a violation of §86.1006 in fact occurred, if the manufacturer wishes to contend that, although the violation occurred, the vehicle or engine configuration or engine family in question was not involved in the violation to a degree that would warrant suspension of certification under paragraph (e)(1)(v) of this section, he shall have the burden of establishing that contention to the satisfaction of the Administrator.

(6) Any suspension of certification under paragraph (e)(1) of this section shall:

(i) Be made only after the manufacturer concerned has been offered an opportunity for a hearing conducted in accordance with §86.1014; and

(ii) Not apply to vehicles or engines no longer in the hands of the manufacturer.

(7) Any voiding of a certificate of conformity under paragraph (e)(4) of this section shall be made only after the manufacturer concerned has been offered an opportunity for a hearing conducted in accordance with §86.1014.

(8) Any voiding of the certificate under paragraph (a) (10) or (11) of this section will be made only after the manufacturer concerned has been offered an opportunity for a hearing conducted in accordance with §86.1014.

(f) For engine families required to have an emission control diagnostic system, certification will not be granted if, for any emission data vehicle or other test vehicle approved by the Administrator, the malfunction indicator light does not illuminate under any of the following circumstances, or if, for any assembly line vehicle, the malfunction indicator light does not illuminate under the circumstances described in paragraph (f)(4) of this section. Only paragraph (f)(4) of this section applies for diesel cycle vehicles.

(1) A catalyst is replaced with a deteriorated or defective catalyst or electronic simulation of such resulting in both an exhaust emission exceedance of 0.6 g/mi HC and an exhaust emission increase of 0.4 g/mi HC on a normal temperature (20 to 30 °C) emission certification test.

(2) A misfire condition is induced resulting in an increase in emissions of greater than 0.4 g/mi HC or 3.4 g/mi CO or 1.0 g/mi NO_X on a normal temperature (20 to 30 °C) emission certification test.

(3) Any oxygen sensor is replaced with a deteriorated or defective oxygen sensor, or the operation of such a sensor is simulated, resulting in an increase in emissions of 0.2 g/mi HC or 1.7 g/mi CO or 0.5 g/mi NO_X on a normal temperature (20 to 30 °C) emission certification test.

(4) The electronic evaporative purge control device (if equipped) is disconnected or the operation of any emission-related powertrain component connected to a computer results in an increase in emissions of 0.2 g/mi HC or 1.7 g/mi CO or 0.5 g/mi NO_X on a normal temperature (20 to 30 °C) emission certification test.

[58 FR 4028, Jan. 12, 1993, as amended at 58 FR 9487, Feb. 19, 1993; 60 FR 15247, Mar. 23, 1995]

§86.094–35 Labeling.

Section 86.094–35 includes text that specifies requirements that differ from §86.092–35. Where a paragraph in §86.092–35 is identical and applicable to §86.094–35, this may be indicated by specifying the corresponding paragraph and the statement ''[Reserved]. For guidance see §86.092–35.'' Where a corresponding paragraph of §86.092–35 is not applicable, this is indicated by the statement ''[Reserved].''

(a) The manufacturer of any motor vehicle (or motor vehicle engine) subject to the applicable emission standards (and family emission limits, as appropriate) of this subpart, shall, at the

time of manufacture, affix a permanent legible label, of the type and in the manner described below, containing the information hereinafter provided, to all production models of such vehicles (or engines) available for sale to the public and covered by a Certificate of Conformity under § 86.091–30(a).

(1) *Light-duty vehicles.* (i) A permanent, legible label shall be affixed in a readily visible position in the engine compartment.

(ii) The label shall be affixed by the vehicle manufacturer who has been issued the certificate of conformity for such vehicle, in such manner that it cannot be removed without destroying or defacing the label. The label shall not be affixed to any equipment which is easily detached from such vehicle.

(iii) The label shall contain the following information lettered in the English language in block letters and numerals, which shall be of a color that contrasts with the background of the label:

(A) The label heading: Vehicle Emission Control Information;

(B) Full corporate name and trademark of manufacturer;

(C) Engine displacement (in cubic inches or liters), engine family identification, and evaporative family identification;

(D) Engine tune-up specifications and adjustments, as recommended by the manufacturer in accordance with the applicable emission standards (or family emission limits, as applicable), including but not limited to idle speed(s), ignition timing, the idle air-fuel mixture setting procedure and value (e.g., idle CO, idle air-fuel ratio, idle speed drop), high idle speed, initial injection timing and valve lash (as applicable), as well as other parameters deemed necessary by the manufacturer. These specifications should indicate the proper transmission position during tuneup and what accessories (e.g., air conditioner), if any, should be in operation;

(E) An unconditional statement of compliance with the appropriate model year U.S. Environmental Protection Agency regulations which apply to light-duty vehicles;

(F) The exhaust emission standards (or family emission limits, if applicable) to which the engine family is certified, and the corresponding exhaust emission standards (or family emission limits, if applicable) which the engine family must meet in-use;

(G) For vehicles that have been exempted from compliance with the emission standards at high altitude, as specified in § 86.090–8(h):

(*1*) A highlighted statement (e.g., underscored or boldface letters) that the vehicle is certified to applicable emission standards at low altitude only,

(*2*) A statement that the vehicle's unsatisfactory performance under high-altitude conditions makes it unsuitable for principal use at high altitude, and

(*3*) A statement that the emission performance warranty provisions of 40 CFR part 85, subpart V do not apply when the vehicle is tested at high altitude;

(H) For vehicles that have been exempted from compliance with the emission standards at low altitude, as specified in § 86.094–8(i):

(*1*) A highlighted statement (e.g., underscored or boldface letters) that the vehicle is certified to applicable emission standards at high altitude only, and

(*2*) A statement that the emission performance warranty provisions of 40 CFR part 85, subpart V do not apply when the vehicle is tested at low altitude;

(I) The vacuum hose routing diagram applicable to the vehicles if the vehicles are equipped with vacuum actuated emission and emission-related components. The manufacturer may, at its option, use a separate label for the vacuum hose routing diagram provided that the vacuum hose diagram is placed in a visible and accessible position as provided in this section;

(J) Vehicles granted final admission under § 85.1505 of this chapter must comply with the labeling requirements contained in § 85.1510 of this chapter.

(K) If applicable, a statement that the vehicle is exempt from cold temperature carbon monoxide standards.

(L) Vehicles which have been certified under the provisions of § 86.094–8(j) must comply with the labeling requirements contained in § 86.1606.

(2) *Light-duty trucks and heavy-duty vehicles optionally certified in accordance with the light-duty truck provisions.* (i) A

legible permanent label shall be affixed in a readily visible position in the engine compartment.

(ii) The label shall be affixed by the vehicle manufacturer who has been issued the certificate of conformity for such vehicle, in such a manner that it cannot be removed without destroying or defacing the label. The label shall not be affixed to any equipment which is easily detached from such vehicle.

(iii) The label shall contain the following information lettered in the English language in block letters and numerals, which shall be of a color that contrasts with the background of the label:

(A) The label heading: Important Vehicle Information;

(B) Full corporate name and trademark of manufacturer;

(C) Engine family displacement (in cubic inches), engine family identification, and evaporative family identification;

(D) Engine tune-up specifications and adjustments, as recommended by the manufacturer in accordance with the applicable emission standards (or family emission limits, as appropriate), including but not limited to idle speed(s), ignition timing, the idle air-fuel mixture setting procedure and value (e.g., idle CO, idle air-fuel ratio, idle speed drop), high idle speed, initial injection timing, and valve lash (as applicable), as well as other parameters deemed necessary by the manufacturer. These specifications should indicate the proper transmission position during tune-up and what accessories (e.g., air conditioner), if any, should be in operation. If adjustments or modifications to the vehicle are necessary to insure compliance with emission standards (or family emission limits, as appropriate) at either high or low altitude, the manufacturer shall either include the instructions for such adjustments on the label, or indicate on the label where instructions for such adjustments may be found. The label shall indicate whether the engine tune-up or adjustment specifications are applicable to high altitude, low altitude or both;

(E)(*1*) *Light-duty trucks.* The prominent statement, ''This vehicle conforms to U.S. EPA regulations applicable to 19XX Model Year New Light-Duty Trucks.''

(*2*) *Heavy-duty vehicles optionally certified in accordance with the light-duty truck provisions.* The prominent statement, ''This heavy-duty vehicle conforms to the U.S. EPA regulations applicable to 19XX Model Year Light-Duty Trucks under the special provision of 40 CFR 86.092–1(b).'';

(F) [Reserved]

(G) A statement, if applicable, that the adjustments or modifications indicated on the label are necessary to ensure emission control compliance at the altitude specified;

(H) A statement, if applicable, that the high-altitude vehicle was designated or modified for principal use at high altitude. This statement must be affixed by the manufacturer at the time of assembly or by any dealer who performs the high-altitude modification or adjustment prior to sale to an ultimate purchaser;

(I) For vehicles that have been exempted from compliance with the high-altitude emission standards, as specified in § 86.094–9(g)(2):

(*1*) A highlighted statement (e.g., underscored or boldface letters) that the vehicle is certified to applicable emission standards at low altitude only;

(*2*) A statement that the vehicle's unsatisfactory performance under high-altitude conditions makes it unsuitable for principal use at high altitude; and

(*3*) A statement that the emission performance warranty provisions of 40 CFR part 85, subpart V do not apply when the vehicle is tested at high altitude;

(J) The exhaust emission standards (or family emission limits, if applicable) to which the engine family is certified, and the corresponding exhaust emission standards (or family emission limits, if applicable) which the engine family must meet in-use;

(K) [Reserved]

(L) The vacuum hose routing diagram applicable to the vehicles if the vehicles are equipped with vacuum actuated emission and emission-related components. The manufacturer may, at its option, use a separate label for the vacuum hose routing diagram provided that the vacuum hose diagram is

placed in a visible and accessible position as provided by this section.

(M) Vehicles granted final admission under § 85.1505 of this chapter must comply with the labeling requirements contained in § 85.1510 of this chapter.

(N) If applicable, a statement that the vehicle is exempt from cold temperature carbon monoxide standards.

(3) *Heavy-duty engines.* (i) A permanent legible label shall be affixed to the engine in a position in which it will be readily visible after installation in the vehicle.

(ii) The label shall be attached to an engine part necessary for normal engine operation and not normally requiring replacement during engine life.

(iii) The label shall contain the following information lettered in the English language in block letters and numerals which shall be of a color that contrasts with the background of the label:

(A) The label heading: Important Engine Information;

(B) Full corporate name and trademark of manufacturer;

(C) Engine displacement (in cubic inches or liters) and engine family and model designations;

(D) Date of engine manufacture (month and year). The manufacturer may, in lieu of including the date of manufacture on the engine label, maintain a record of the engine manufacture dates. The manufacturer shall provide the date of manufacture records to the Administrator upon request;

(E) Engine specifications and adjustments as recommended by the manufacturer. These specifications should indicate the proper transmission position during tune-up and what accessories (e.g., air conditioner), if any, should be in operation;

(F) For Otto-cycle engines the label should include the idle speed, ignition timing, and the idle air-fuel mixture setting procedure and value (e.g., idle CO, idle air-fuel ratio, idle speed drop), and valve lash;

(G) For diesel engines the label should include the advertised hp at rpm, fuel rate at advertised hp in mm^3/stroke, valve lash, initial injection timing, and idle speed;

(H) The prominent statement: ''This engine conforms to U.S. EPA regulations applicable to 19XX Model Year New Heavy-Duty Engines.''

(I) If the manufacturer is provided with an alternate useful life period under the provisions of § 86.094–21(f), the prominent statement: ''This engine has been certified to meet U.S. EPA standards for a useful-life period of XXX miles or XXX hours of operation, whichever occurs first. This engine's actual life may vary depending on its service application.'' The manufacturer may alter this statement only to express the assigned alternate useful life in terms other than miles or hours (e.g., years, or hours only);

(J) *For diesel engines.* The prominent statement: ''This engine has a primary intended service application as a XXX heavy-duty engine.'' (The primary intended service applications are light, medium, and heavy, as defined in § 86.090–2.)

(K) *For Otto-cycle engines.* One of the following statements, as applicable:

(*1*) For engines certified to the emission standards under § 86.091–10(a)(1)(i) or (iii), the statement: ''This engine is certified for use in all heavy-duty vehicles.''

(*2*) For gasoline-fueled engines certified under the provisions of § 86.091–10(a)(3)(i), the statement: ''This engine is certified for use in all heavy-duty vehicles under the special provision of 40 CFR 86.091–10(a)(3)(i).''

(*3*) For engines certified to the emission standards under § 86.091–10(a)(1)(ii) or (iv), the statement: ''This engine is certified for use only in heavy-duty vehicles with a gross vehicle weight rating above 14,000 lbs.''

(L) For diesel engines which are included in the diesel heavy-duty particulate averaging program, the family particulate emission limit to which the engine is certified.

(M) For any heavy-duty engines which are included in the heavy-duty NO_X averaging program, the family NO_X emission limit to which the engine is certified.

(N) Engines granted final admission under § 85.1505 of this chapter must comply with the labeling requirements contained in § 85.1510 of this chapter.

(O) For diesel engines which have been certified to comply with the urban bus particulate standard of 40

CFR 86.094–11(a)(1)(iv)(A), the statement ''This engine is certified for use in an urban bus as defined at 40 CFR 86.093–2.'' Unless waived by the Administrator on the basis of impracticality, for diesel engines not certified to comply with the urban bus particulate standard, the statement ''This engine is not certified for use in an urban bus as defined at 40 CFR 86.093–2. Sales of this engine for use in an urban bus is a violation of Federal law under the Clean Air Act.''

(iv) The label may be made up of one or more pieces: *Provided,* That all pieces are permanently attached to the same engine or vehicle part as applicable.

(4) *Gasoline-fueled and methanol-fueled heavy-duty vehicles.* (i) A permanent, legible label shall be affixed in a readily visible position in the engine compartment. If such vehicles do not have an engine compartment, the label required in this paragraph (a)(4) and paragraph (g)(1) of this section shall be affixed in a readily visible position on the operator's enclosure or on the engine.

(ii) The label shall be affixed by the vehicle manufacturer who has been issued the Certificate of Conformity for such vehicle, in such a manner that it cannot be removed without destroying or defacing the label. The label shall not be affixed to any equipment which is easily detached from such vehicle.

(iii) The label shall contain the following information lettered in the English language in block letters and numerals, which shall be of a color that contrasts with the background of the label:

(A) The label heading: Vehicle Emission Control Information;

(B) Full corporate name and trademark of manufacturer;

(C) Evaporative family identification;

(D) The maximum nominal fuel tank capacity (in gallons) for which the evaporative control system is certified; and

(E) One of the following, as appropriate:

(*1*) An unconditional statement of compliance with the appropriate model year U.S. Environmental Protection Agency regulations which apply to gasoline-fueled heavy-duty vehicles;

(*2*) An unconditional statement of compliance with the appropriate model year U.S. Environmental Protection Agency regulations which apply to methanol-fueled heavy-duty vehicles;

(F) Vehicles granted final admission under § 85.1505 of this chapter must comply with the labeling requirements contained in § 85.1510 of this chapter.

(b) The provisions of this section shall not prevent a manufacturer from also reciting on the label that such vehicle (or engine) conforms to any applicable state emission standards for new motor vehicles (or new motor vehicle engines) or any other information that such manufacturer deems necessary for, or useful to, the proper operation and satisfactory maintenance of the vehicle (or engine).

(c)(1) The manufacturer of any light-duty vehicle or light-duty truck subject to the emission standards (or family emission limits, as appropriate) of this subpart shall, in addition and subsequent to setting forth those statements on the label required by the Department of Transportation (DOT) pursuant to 49 CFR 567.4, set forth on the DOT label or an additional label located in proximity to the DOT label and affixed as described in 49 CFR 567.4(b), the following information in the English language, lettered in block letters and numerals not less than three thirty-seconds of an inch high, of a color that contrasts with the background of the label:

(i) The heading: ''Vehicle Emission Control Information.''

(ii)(A) *For light-duty vehicles,* The statement: ''This Vehicle Conforms to U.S. EPA Regulations Applicable to 19XX Model Year New Motor Vehicles.''

(B) *For light-duty trucks,* (*1*) The statement: ''This vehicle conforms to U.S. EPA regulations applicable to 19XX Model Year New Light-Duty Trucks.''

(*2*) [Reserved]

(iii) One of the following statements, as applicable, in letters and numerals not less than six thirty-seconds of an inch high and of a color that contrasts with the background of the label:

(A) For all vehicles certified as non-catalyst-equipped: ''NON-CATALYST'';

(B) For all vehicles certified as catalyst-equipped which are included in a manufacturer's catalyst control program for which approval has been given by the Administrator: ''CATALYST—APPROVED FOR IMPORT'';

(C) For all vehicles certified as catalyst-equipped which are not included in a manufacturer's catalyst control program for which prior approval has been given by the Administrator: ''CATALYST''.

(2) In lieu of selecting either of the labeling options of paragraph (c)(1) of this section, the manufacturer may add the information required by paragraph (c)(1)(iii) of this section to the label required by paragraph (a) of this section. The required information will be set forth in the manner prescribed by paragraph (c)(1)(iii) of this section.

(d) Incomplete light-duty trucks or incomplete heavy-duty vehicles optionally certified in accordance with the light-duty truck provisions shall have one of the following prominent statements, as applicable, printed on the label required by paragraph (a)(2) of this section in lieu of the statement required by paragraph (a)(2)(iii)(E) of this section.

(1) *Light-duty trucks.* The statement, ''This vehicle conforms to U.S. EPA regulations applicable to 19XX Model Year New Light-Duty Trucks when it does not exceed XX pounds in curb weight, XX pounds in gross vehicle weight rating, and XX square feet in frontal area.''

(2) *Heavy-duty vehicles optionally certified in accordance with the light-duty truck provisions.* ''This heavy-duty vehicle conforms to the U.S. EPA regulations applicable to 19XX Model Year Light-Duty Trucks under the special provision of 40 CFR 86.085–1(b) when it does not exceed XXX pounds in curb weight, XXX pounds in gross vehicle weight rating, and XXX square feet in frontal area.''

(e) Incomplete heavy-duty vehicles having a gross vehicle weight rating of 8,500 pounds or less shall have one of the following statements printed on the label required by paragraph (a)(3) of this section in lieu of the statement required by paragraph (a)(3)(iii)(H) of this section: ''This engine conforms to U.S. EPA regulations applicable to 19XX Model Year Heavy-Duty Engines when installed in a vehicle completed at a curb weight of more than 6,000 pounds or with a frontal area of greater than 45 square feet.''

(f) The manufacturer of any incomplete light-duty vehicle or light-duty truck shall notify the purchaser of such vehicle of any curb weight, frontal area, or gross vehicle weight rating limitations affecting the emission certificate applicable to that vehicle. This notification shall be transmitted in a manner consistent with National Highway Traffic Safety Administration safety notification requirements published in 49 CFR part 568.

(g) *Incomplete vehicle fuel tank capacity.* (1)(i) Incomplete gasoline-fueled heavy-duty vehicles shall have the following prominent statement printed on the label required in paragraph (a)(4) of this section: ''(Manufacturer's corporate name) has determined that this vehicle conforms to U.S. EPA regulations applicable to 19XX Model Year New Gasoline-Fueled Heavy-Duty Vehicles when completed with a nominal fuel tank capacity not to exceed XXX gallons. Persons wishing to add fuel tank capacity beyond the above maximum must submit a written statement to the Administrator that the hydrocarbon storage system has been upgraded according to the requirements of 40 CFR 86.092–35(g)(2).''

(ii) Incomplete methanol-fueled heavy-duty vehicles shall have the following prominent statement printed on the label required in paragraph (a)(4) of this section: ''(Manufacturer's corporate name) has determined that this vehicle conforms to U.S. EPA regulations applicable to 19XX Model Year New Methanol-Fueled Heavy-Duty Vehicles when completed with a nominal fuel tank capacity not to exceed XXX gallons. Persons wishing to add fuel tank capacity beyond the above maximum must submit a written statement to the Administrator that the hydrocarbon storage system has been upgraded according to the requirements of 40 CFR 86.091–35(g)(2).''

(2) Persons wishing to add fuel tank capacity beyond the maximum specified on the label required in paragraph (g)(1) of this section shall:

(i) Increase the amount of fuel tank vapor storage material according to the following function:

$$Cap_f = Cap_i\left(\frac{T.\ Vol.}{Max.\ Vol.}\right)$$

Where:

Cap_f=final amount of fuel tank vapor storage material, grams.

Cap_i=initial amount of fuel tank vapor storage material, grams.

T. Vol.=total fuel tank volume of completed vehicle, gallons.

Max. Vol.=maximum fuel tank volume as specified on the label required in paragraph (g)(1) of this section, gallons.

(ii) Use, if applicable, hosing for fuel vapor routing which is at least as impermeable to hydrocarbon vapors as that used by the primary manufacturer.

(iii) Use vapor storage material with the same absorptive characteristics as that used by the primary manufacturer.

(iv) Connect, if applicable, any new hydrocarbon storage device to the existing hydrocarbon storage device in series such that the original hydrocarbon storage device is situated between the fuel tank and the new hydrocarbon storage device. The original hydrocarbon storage device shall be sealed such that vapors cannot reach the atmosphere. The elevation of the original hydrocarbon storage device shall be equal to or lower than the new hydrocarbon storage device.

(v) Submit a written statement to the Administrator that paragraphs (g)(2)(i) through (g)(2)(iv) of this section have been complied with.

(3) If applicable, the Administrator will send a return letter verifying the receipt of the written statement required in paragraph (g)(2)(v) of this section.

(h) *Notification of nonconformance penalty*. (1) Light-duty trucks and heavy-duty vehicles and engines for which nonconformance penalties are to be paid in accordance with § 86.1113–87(b) shall have the following information printed on the label required in paragraph (a) of this section. The manufacturer shall begin labeling production engines or vehicles within 10 days after the completion of the production compliance audity (PCA).

(i) The statement: ''The manufacturer of this engine/vehicle will pay a nonconformance penalty to be allowed to introduce it into commerce at an emission level higher than the applicable emission standard. The compliance level (or new emission standard) for this engine/vehicle is XXX.'' (The manufacturer shall insert the applicable pollutant and compliance level calculated in accordance with § 86.1112–87(a).)

(ii) [Reserved]

(2) If a manufacturer introduces an engine or vehicle into commerce prior to the compliance level determination of § 86.1112–87(a), it shall provide the engine or vehicle owner with a label as described above to be affixed in a location in proximity to the label required in paragraph (a) of this section within 30 days of the completion of the PCA.

(i) All light-duty vehicles and light-duty trucks shall comply with SAE Recommended Practices J1877 ''Recommended Practice for Bar-Coded Vehicle Identification Number Label,'' (MAY88), and J1892 ''Recommended Practice for Bar-Coded Vehicle Emission Configuration Label,'' (MAY88) except that label characters 3 through 7 as specified in J1892 shall be consistent with the standardized engine family name as revised by EPA for the application model year. SAE J1877 and J1892 are incorporated by reference. This incorporation by reference was approved by the Director of the Federal Register in accordance with 5 U.S.C. 552(a) and 1 CFR part 51. Copies may be obtained from the Society of Automotive Engineers, Inc., 400 Commonwealth Drive, Warrendale, PA 15096–0001. Copies may be inspected at Docket No. A–90–35 at EPA's Air Docket (LE–131), room 1500M, 1st Floor, Waterside Mall, 401 M Street, SW., Washington, DC, or at the Office of the Federal Register, 800 North Capitol Street, NW., suite 700, Washington, DC.

[56 FR 25750, June 5, 1991, as amended at 57 FR 31907, July 17, 1992; 58 FR 4035, Jan. 12, 1993; 58 FR 9487, Feb. 19, 1993; 58 FR 15799, Mar. 24, 1993; 58 FR 33209, June 16, 1993]

§ 86.094–38 Maintenance instructions.

Section 86.094–38 includes text that specifies requirements that differ from those specified in § 86.087–38. Where a

paragraph in § 86.087–38 is identical and applicable to § 86.094–38, this may be indicated by specifying the corresponding paragraph and the statement ''[Reserved]. For guidance see § 86.087–38.''.

(a) through (f) [Reserved]. For guidance see § 86.087–38.

(g) Emission control diagnostic service information:

(1) Manufacturers shall furnish or cause to be furnished to any person engaged in the repairing or servicing of motor vehicles or motor vehicle engines, or the Administrator upon request, any and all information needed to make use of the on-board diagnostic system and such other information, including instructions for making emission-related diagnosis and repairs, including, but not limited to, service manuals, technical service bulletins, recall service information, data stream information, bi-directional control information, and training information, unless such information is protected by section 208(c) as a trade secret. No such information may be withheld under section 208(c) of the Act if that information is provided (directly or indirectly) by the manufacturer to franchised dealers or other persons engaged in the repair, diagnosing, or servicing of motor vehicles or motor vehicle engines.

(2) Emission-related information includes, but is not limited to:

(i) Information regarding any system, component or part of a vehicle that controls emissions and any system, components and/or parts associated with the powertrain system, including, but not limited to, the fuel system and ignition system;

(ii) Information for any system, component, or part that is likely to impact emissions, such as transmission systems; and

(iii) Any other information specified by the Administrator to be relevant for the diagnosis and repair of an emission failure found through the Inspection and Maintenance program, after such finding has been communicated to the affected manufacturer(s).

(3) All information required to be made available by this section shall be made available to persons referred to in this section at a fair and reasonable price, as determined by the Administrator. In reaching a decision, the Administrator shall consider all relevant factors, including, but not limited to, the cost to the manufacturer of preparing and/or providing the information, the type of information, the format in which it is provided, the price charged by other manufacturers for similar information, the differences that exist among manufacturers (e.g., the size of the manufacturer), the quantity of material contained in a publication, the detail of the information, the cost of the information prior to the effective date of this section, volume discounts, and inflation.

(4) Any information which is not provided at a fair and reasonable price shall be considered unavailable.

(5) By December 7, 1995, each manufacturer shall provide in a manner specified in paragraph (g)(9) of this section an index of the information required to be made available by this section for 1994 and later model year vehicles which have been offered for sale; this requirement does not apply to indirect information, including the information specified in paragraph (g)(10) of this section. This index shall:

(i) Be updated on the first and third Monday of each month;

(ii) Provide titles that either adequately describes the contents of the document to which it refers or provides a brief description of the information contained in that document; and

(iii) Provide the cost of information and where it can be obtained.

(6) For vehicle models introduced more than four months after the effective date of this section, manufacturers shall make the information required under this section available to persons specified in paragraph (g)(1) of this section at the same time it is made available to dealerships, except as otherwise specified in this section.

(7) Each manufacturer shall maintain the index of information specified in paragraph (g)(5) of this section on FedWorld or other database designated by the Administrator. Manufacturers shall inform persons specified in paragraph (g)(1) of this section about the availability of the index in a manner prescribed by the Administrator.

(8) Each manufacturer shall be responsible for paying its pro rata share

of any costs associated with establishing and maintaining the index of emission-related service and repair information provided for in paragraphs (g)(5) and (g)(7) of this section.

(9) Manufacturers or their designated distributors must mail requested information within one business day of receiving an order, and shall provide overnight delivery if the ordering party requests it and assumes the cost of delivery.

(10) All emission-related data stream information made available to manufacturers' franchised dealerships (or others in the service industry) shall be made available to the persons indicated in paragraph (g)(1) of this section either through provision of manufacturer equipment and tools or through provision of such information to equipment and tool manufacturers.

(11) Effective January 1,1997, a manufacturer shall only provide bi-directional control to its franchised dealerships if it provides equipment and tool manufacturers with information to make diagnostic equipment with the same bi-directional control capabilities available to the dealerships, or if it provides such capabilities directly to persons specified in paragraph (g)(1) of this section by offering for sale at a reasonable cost through manufacturer tools.

(12) Manufacturers shall make data stream information and bi-directional control information available for all model years beginning with model year 1994 as specified in paragraphs (g)(10) and (g)(11) of this section. If a manufacturer can demonstrate, to the satisfaction of the Administrator, that safeguards for bi-directional controls are only installed in tools, not in vehicle on-board computers, then that manufacturer may receive a waiver from producing bi-directional controls for vehicles prior to the 1997 model year.

(13) Effective December 1, 1997, manufacturers shall make available in the manner described in paragraph (g)(16) of this section to persons specified in paragraph (g)(1) of this section reprogramming capability for all emission-related reprogramming events (including driveability reprogramming events that may affect emissions) that were issued prior to December 1, 1997 by manufacturers and that were made available to any manufacturer dealerships for model years 1994 through 1997; and manufacturers shall make available to persons indicated in paragraph (g)(1) of this section in the manner described in paragraph (g)(16) of this section reprogramming capability for all emission-related reprogramming events (including driveability reprogramming events that may affect emissions) that are issued by manufacturers on or after December 1, 1997, for 1994 and later model years at the same time they are made available to dealerships.

(14) For all vehicles, reprogramming need not be provided for any recalibrations performed prior to vehicles entering the stream of commerce (i.e., sale to first purchaser).

(15) If a manufacturer can demonstrate, to the satisfaction of the Administrator, that hardware would have to be retroactively installed on vehicles to meet security measures implemented by the manufacturer, the manufacturer may receive a waiver from the requirements of paragraph (g)(13) of this section for model years 1994 through 1996.

(16) Manufacturers shall either offer for sale at a competitive market price a reprogramming tool that interfaces with a substantial majority of generic portable computers or make available to aftermarket tool and equipment companies information that would enable them to manufacture such a tool. Any method adopted by a manufacturer by which reprogramming is made available to persons specified in paragraph (g)(1) of this section shall not impose a significant burden on such providers beyond that experienced by dealerships.

(17) Manufacturers shall be responsible for ensuring that persons specified in paragraph (g)(1) of this section shall have access to reprogramming services at a reasonable cost and in a timely manner.

(18) Manufacturers shall provide persons specified in paragraph (g)(1) of this section with an efficient and cost-effective method for identifying whether the calibrations on vehicles are the latest to be issued.

(19) Manufacturers shall either make available to aftermarket tool and equipment companies no later than the date of model introduction any and all information, except calibrations and recalibrations, needed to develop and manufacture generic tools that can be used by persons specified in paragraph (g)(1) of this section to diagnose, service and repair emission-related parts, components and systems or manufacturers may sell their own diagnostic tools and equipment to persons specified in paragraph (g)(1) of this section if the price of such tools is reasonable.

(20) A manufacturer is subject to a penalty of up to $25,000 per day per violation for failure to make available the information required by this section.

[60 FR 40496, Aug. 9, 1995, as amended at 62 FR 31233, June 6, 1997]

§ 86.095–14 Small-volume manufacturers certification procedures.

Section 86.095–14 includes text that specifies requirements that differ from § 86.094–14. Where a paragraph in § 86.094–14 is identical and applicable to § 86.095–14, this may be indicated by specifying the corresponding paragraph and the statement ''[Reserved]. For guidance see § 86.094–14.'' Where a corresponding paragraph of § 86.094–14 is not applicable, this is indicated by the statement ''[Reserved].''

(a) through (c)(11)(ii)(B)(*15*) [Reserved]. For guidance see § 86.094–14.

(c)(11)(ii)(B)(*16*) A description of vehicle adjustments or modifications required by §§ 86.094–8(j) and 86.094–9(j), if any, to assure that light-duty vehicles and light-duty trucks covered by a certificate of conformity conform to the regulations while being operated at any altitude locations, and a statement of the altitude at which the adjustments or modifications apply.

(*17*) A description of the light-duty vehicles and light-duty trucks which are exempted from the high altitude emission standards.

(*18*) Proof that the manufacturer has obtained or entered an agreement to purchase, when applicable, the insurance policy required by the § 85.1510(b) of this chapter. The manufacturer may submit a copy of the insurance policy or purchase agreement as proof that the manufacturer has obtained or entered an agreement to purchase the insurance policy.

(C) The results of all emission tests the manufacturer performs to demonstrate compliance with the applicable standards.

(D)(*1*) The following statement signed by the authorized representative of the manufacturer: ''The vehicles (or engines) described herein have been tested in accordance with (list of the applicable subparts A, B, D, I, M, N, or P) of part 86, title 40, Code of Federal Regulations, and on the basis of those tests are in conformance with that subpart. All of the data and records required by that subpart are on file and are available for inspection by the EPA Administrator. We project the total U.S. sales of vehicles (engines) subject to this subpart (including all vehicles and engines imported under the provisions of 40 CFR 85.1505 and 40 CFR 85.1509) to be fewer than 10,000 units.''

(*2*) A statement as required by and contained in § 86.094–14(c)(5) signed by the authorized representative of the manufacturer.

(*3*) A statement that the vehicles or engines described in the manufacturer's application for certification are not equipped with auxiliary emission control devices which can be classified as a defeat device as defined in § 86.092–2.

(*4*) A statement of compliance with section 206(a)(3) of the Clean Air Act (42 U.S.C. 7525(a)(3)).

(*5*) A statement that, based on the manufacturer's engineering evaluation and/or emission testing, the light-duty vehicles and light-duty trucks comply with emission standards at high altitude unless exempt under § 86.094–8(h) or § 86.094–9(h).

(*6*) [Reserved]

(c)(11)(ii)(D)(*7*) through (c)(15) [Reserved] . For guidance see § 86.094–14.

[58 FR 4035, Jan. 12, 1993]

§ 86.095–23 Required data.

(a) The manufacturer shall perform the tests required by the applicable test procedures and submit to the Administrator the information described in paragraphs (b) through (l) of this

section, provided, however, that if requested by the manufacturer, the Administrator may waive any requirement of this section for testing of vehicle (or engine) for which emission data are available or will be made available under the provisions of § 86.091–29.

(b) *Durability data.* (1)(i) The manufacturer shall submit exhaust emission durability data on such light-duty vehicles tested in accordance with applicable test procedures and in such numbers as specified, which will show the performance of the systems installed on or incorporated in the vehicle for extended mileage, as well as a record of all pertinent maintenance performed on the test vehicles.

(ii) The manufacturer shall submit exhaust emission deterioration factors for light-duty trucks and heavy-duty engines and all test data that are derived from the testing described under § 86.094–21(b)(5)(i)(A), as well as a record of all pertinent maintenance. Such testing shall be designed and conducted in accordance with good engineering practice to assure that the engines covered by a certificate issued under § 86.094–30 will meet each emission standard (or family emission limit, as appropriate) in § 86.094–9, § 86.091–10, or § 86.094–11 as appropriate, in actual use for the useful life applicable to that standard.

(2) For light-duty vehicles and light-duty trucks, the manufacturer shall submit evaporative emission deterioration factors for each evaporative emission family-evaporative emission control system combination and all test data that are derived from testing described under § 86.094–21(b)(4)(i) designed and conducted in accordance with good engineering practice to assure that the vehicles covered by a certificate issued under § 86.094–30 will meet the evaporative emission standards in § 86.094–8 or § 86.094–9, as appropriate, for the useful life of the vehicle.

(3) For heavy-duty vehicles equipped with gasoline-fueled or methanol-fueled engines, the manufacturer shall submit evaporative emission deterioration factors for each evaporative emission family-evaporative emission control system combination identified in accordance with § 86.094–21(b)(4)(ii). Furthermore, a statement that the test procedure(s) used to derive the deterioration factors includes, but need not be limited to, a consideration of the ambient effects of ozone and temperature fluctuations, and the service accumulation effects of vibration, time, and vapor saturation and purge cycling. The deterioration factor test procedure shall be designed and conducted in accordance with good engineering practice to assure that the vehicles covered by a certificate issued under § 86.094–30 will meet the evaporative emission standards in §§ 86.091–10 and § 86.094–11 in actual use for the useful life of the engine. Furthermore, a statement that a description of the test procedure, as well as all data, analyses, and evaluations, is available to the Administrator upon request.

(4)(i) For heavy-duty vehicles with a Gross Vehicle Weight Rating of up to 26,000 lbs and equipped with gasoline-fueled or methanol-fueled engines, the manufacturer shall submit a written statement to the Administrator certifying that the manufacturer's vehicles meet the standards of § 86.091–10 or § 86.094–11 (as applicable) as determined by the provisions of § 86.094–28. Furthermore, the manufacturer shall submit a written statement to the Administrator that all data, analyses, test procedures, evaluations, and other documents, on which the requested statement is based, are available to the Administrator upon request.

(ii) For heavy-duty vehicles with a Gross Vehicle Weight Rating of greater than 26,000 lbs and equipped with gasoline-fueled or methanol-fueled engines, the manufacturer shall submit a written statement to the Administrator certifying that the manufacturer's evaporative emission control systems are designed, using good engineering practice, to meet the standards of § 86.091–10 or § 86.094–11 (as applicable) as determined by the provisions of § 86.094–28. Furthermore, the manufacturer shall submit a written statement to the Administrator that all data, analyses, test procedures, evaluations, and other documents, on which the requested statement is based, are available to the Administrator upon request.

(c) *Emission data*—(1) *Certification vehicles.* The manufacturer shall submit

emission data, including, in the case of methanol fuel, methanol, formaldehyde, and total hydrocarbon equivalent, on such vehicles tested in accordance with applicable test procedures and in such numbers as specified. These data shall include zero-mile data, if generated, and emission data generated for certification as required under § 86.094–26(a)(3)(i) or (ii). In lieu of providing emission data the Administrator may, on request of the manufacturer, allow the manufacturer to demonstrate (on the basis of previous emission tests, development tests, or other information) that the engine will conform with certain applicable emission standards of § 86.094–8 or § 86.094–9. Standards eligible for such manufacturer requests are those for idle CO emissions, smoke emissions, or particulate emissions from methanol-fueled diesel-cycle certification vehicles, and those for particulate emissions from model year 1994 and later gasoline-fueled or methanol-fueled Otto-cycle certification vehicles that are not certified to the Tier 0 standards of § 86.094–9(a)(1)(i), (ii), or § 86.094–8(a)(1)(i). Also eligible for such requests are standards for total hydrocarbon emissions from model year 1994 and later certification vehicles that are not certified to the Tier 0 standards of § 86.094–9(a)(1)(i), (ii), or § 86.094–8(a)(1)(i). By separate request, including appropriate supporting test data, the manufacturer may request that the Administrator also waive the requirement to measure particulate emissions when conducting Selective Enforcement Audit testing of Otto-cycle vehicles.

(2) *Certification engines.* (i) The manufacturer shall submit emission data on such engines tested in accordance with applicable emission test procedures of this subpart and in such numbers as specified. These data shall include zero-hour data, if generated, and emission data generated for certification as required under § 86.094–26(c)(4). In lieu of providing emission data on idle CO emissions or particulate emissions from methanol- fueled diesel-cycle certification engines, or on CO emissions from petroleum-fueled or methanol-fueled diesel certification engines the Administrator may, on request of the manufacturer, allow the manufacturer to demonstrate (on the basis of previous emission tests, development tests, or other information) that the engine will conform with the applicable emission standards of § 86.094–11. In lieu of providing emission data on smoke emissions from methanol-fueled or petroleum-fueled diesel certification engines, the Administrator may, on the request of the manufacturer, allow the manufacturer to demonstrate (on the basis of previous emission tests, development tests, or other information) that the engine will conform with the applicable emissions standards of § 86.094–11, except for 1995 and 1996 model year engines with particulate matter certification levels exceeding 0.10 grams per brake horsepower-hour and 1997 or later model year engines with a particulate matter certification level exceeding 0.25 grams per brake horsepower-hour. In lieu of providing emissions data on smoke emissions from petroleum-fueled or methanol-fueled diesel engines when conducting Selective Enforcement Audit testing under 40 CFR part 86, subpart K, the Administrator may, on separate request of the manufacturer, allow the manufacturer to demonstrate (on the basis of previous emission tests, development tests, or other information) that the engine will conform with the applicable smoke emissions standards of § 86.094–11, except for 1995 and 1996 model year engines with particulate matter certification levels exceeding 0.10 grams per brake horsepower-hour and 1997 or later model year engines with a particulate matter certification level exceeding 0.25 grams per brake horsepower-hour.

(ii) For heavy-duty diesel engines, a manufacturer may submit hot-start data only, in accordance with subpart N of this part, when making application for certification. However, for confirmatory, Selective Enforcement Audit, and recall testing by the Agency, both the cold-start and hot-start test data, as specified in subpart N of this part, will be included in the official results.

(d) The manufacturer shall submit a statement that the vehicles (or engines) for which certification is requested conform to the requirements in § 86.084–5(b), and that the descriptions

of tests performed to ascertain compliance with the general standards in § 86.084–5(b), and that the data derived from such tests are available to the Administrator upon request.

(e)(1) The manufacturer shall submit a statement that the test vehicles (or test engines) for which data are submitted to demonstrate compliance with the applicable standards (or family emission limits, as appropriate) of this subpart are in all material respects as described in the manufacturer's application for certification, that they have been tested in accordance with the applicable test procedures utilizing the fuels and equipment described in the application for certification, and that on the basis of such tests the vehicles (or engines) conform to the requirements of this part. If such statements cannot be made with respect to any vehicle (or engine) tested, the vehicle (or engine) shall be identified, and all pertinent data relating thereto shall be supplied to the Administrator. If, on the basis of the data supplied and any additional data as required by the Administrator, the Administrator determines that the test vehicles (or test engine) was not as described in the application for certification or was not tested in accordance with the applicable test procedures utilizing the fuels and equipment as described in the application for certification, the Administrator may make the determination that the vehicle (or engine) does not meet the applicable standards (or family emission limits, as appropriate). The provisions of § 86.094–30(b) shall then be followed.

(2) For evaporative emission durability, or light-duty truck or heavy-duty engine exhaust emission durability, the manufacturer shall submit a statement of compliance with paragraph (b)(1)(ii), (b)(2), or (b)(3) of this section, as applicable.

(f) Additionally, manufacturers participating in the particulate averaging program for diesel light-duty vehicles and diesel light-duty trucks shall submit:

(1) In the application for certification, a statement that the vehicles for which certification is requested will not, to the best of the manufacturer's belief, when included in the manufacturer's production-weighted average emission level, cause the applicable particulate standard(s) to be exceeded, and

(2) No longer than 90 days after the end of a given model year of production of engine families included in one of the diesel particulate averaging programs, the number of vehicles produced in each engine family at each certified particulate FEL, along with the resulting production-weighted average particulate emission level.

(g) Additionally, manufacturers participating in the NO_X averaging program for light-duty trucks shall submit:

(1) In the application for certification, a statement that the vehicles for which certification is required will not, to the best of the manufacturer's belief, when included in the manufacturer's production-weighted average emission level, cause the applicable NO_X standard(s) to be exceeded, and

(2) No longer than 90 days after the end of a given model year of production of engine families included in the NO_X averaging program, the number of vehicles produced in each engine family at each certified NO_X emission level.

(h) Additionally, manufacturers participating in any of the NO_X and/or particulate averaging, trading, or banking programs for heavy-duty engines shall submit for each participating family the items listed in paragraphs (h)(1) through (3) of this section.

(1) Application for certification. (i) The application for certification will include a statement that the engines for which certification is requested will not, to the best of the manufacturer's belief, when included in any of the averaging, trading, or banking programs cause the applicable NO_X or particulate standard(s) to be exceeded.

(ii) The application for certification will also include the type (NO_X or particulate) and the projected number of credits generated/needed for this family, the applicable averaging set, the projected U.S. (49-state) production volumes, by quarter, NCPs in use on a similar family and the values required to calculate credits as given in § 86.094–15. Manufacturers shall also submit how and where credit surpluses are to be dispersed and how and through what

means credit deficits are to be met, as explained in § 86.094–15. The application must project that each engine family will be in compliance with the applicable NO_X and/or particulate emission standards based on the engine mass emissions, and credits from averaging, trading and banking.

(2) [Reserved]

(3) End-of-year report. The manufacturer shall submit end-of-year reports for each engine family participating in any of the averaging, trading, or banking programs, as described in paragraphs (h)(3)(i) through (iv) of this section.

(i) These reports shall be submitted within 90 days of the end of the model year to: Director, Manufacturers Operations Division (6405J), U.S. Environmental Protection Agency, 401 M Street, SW., Washington, DC 20460.

(ii) These reports shall indicate the engine family, the averaging set, the actual U.S. (49-state) production volume, the values required to calculate credits as given in § 86.094–15, the resulting type (NO_X or particulate) and number of credits generated/required, and the NCPs in use on a similar NCP family. Manufacturers shall also submit how and where credit surpluses were dispersed (or are to be banked) and how and through what means credit deficits were met. Copies of contracts related to credit trading must also be included or supplied by the broker if applicable. The report shall also include a calculation of credit balances to show that net mass emissions balances are within those allowed by the emission standards (equal to or greater than a zero credit balance). The credit discount factor described in § 86.094–15 must be included as required.

(iii) The 49-state production counts for end-of-year reports shall be based on the location of the first point of retail sale (e.g., customer, dealer, secondary manufacturer) by the manufacturer.

(iv) Errors discovered by EPA or the manufacturer in the end-of-year report, including changes in the 49 state production counts, may be corrected up to 180 days subsequent to submission of the end-of-year report. Errors discovered by EPA after 180 days shall be corrected if credits are reduced. Errors in the manufacturer's favor will not be corrected if discovered after the 180 day correction period allowed.

(i) Failure by a manufacturer participating in the averaging, trading, or banking programs to submit any quarterly or end-of-year report (as applicable) in the specified time for all vehicles and engines that are part of an averaging set is a violation of section 203(a)(1) of the Clean Air Act (42 U.S.C. 7522(a)(1)) for each such vehicle and engine.

(j) Failure by a manufacturer generating credits for deposit only in either the HDE NO_X or particulate banking programs to submit their end-of-year reports in the applicable specified time period (i.e., 90 days after the end of the model year) shall result in the credits not being available for use until such reports are received and reviewed by EPA. Use of projected credits pending EPA review will not be permitted in these circumstances.

(k) Engine families certified using NCPs are not required to meet the requirements outlined above.

(l) Additionally, manufacturers certifying vehicles shall submit for each model year 1994 through 1997 light-duty vehicle and light light-duty truck engine family and each model year 1996 through 1998 heavy light-duty truck engine family the information listed in paragraphs (l) (1) and (2) of this section.

(1) Application for certification. In the application for certification, the manufacturer shall submit the projected sales volume of engine families certifying to the respective standards, and the in-use standards that each engine family will meet. Volume projected to be produced for U.S. sale may be used in lieu of projected U.S. sales.

(2) End-of-year reports for each engine family.

(i) These end-of-year reports shall be submitted within 90 days of the end of the model year to: Director, Manufacturers Operations Division (6405J), U.S. Environmental Protection Agency, 401 M Street SW., Washington, DC 20460.

(ii) These reports shall indicate the model year, engine family, and the actual U.S. sales volume. The manufacturer may petition the Administrator to allow volume produced for U.S. sale

to be used in lieu of U.S. sales. Such petition shall be submitted within 30 days of the end of the model year to the Manufacturers Operations Division. For the petition to be granted, the manufacturer must establish to the satisfaction of the Administrator that production volume is functionally equivalent to sales volume.

(iii) The U.S. sales volume for end-of-year reports shall be based on the location of the point of sale to a dealer, distributor, fleet operator, broker, or any other entity which comprises the point of first sale.

(iv) Failure by a manufacturer to submit the end-of-year report within the specified time may result in certificate(s) for the engine family(ies) certified to Tier 0 certification standards being voided ab initio plus any applicable civil penalties for failure to submit the required information to the Agency.

(v) These reports shall include the information required under §86.094–7(h)(1). The information shall be organized in such a way as to allow the Administrator to determine compliance with the Tier 1 standards implementation schedules of §§86.094–8 and 86.094–9, and the Tier 1 and Tier 1_I implementation schedules of §§86.708–94 and 86.709–94.

[58 FR 66294, Dec. 20, 1993, as amended at 59 FR 14110, Mar. 25, 1994]

§86.095–24 Test vehicles and engines.

Section 86.095–24 includes text that specifies requirements that differ from §86.094–24. Where a paragraph in §86.094–24 is identical and applicable to §86.095–24, this may be indicated by specifying the corresponding paragraph and the statement ''[Reserved]. For guidance see §86.094–24.'' Where a corresponding paragraph of §86.094–24 is not applicable, this is indicated by the statement ''[Reserved].''

(a) through (b)(1)(v) introductory text [Reserved]. For guidance see §86.094–24.

(b)(1)(v)(A) The manufacturer will select for testing under high-altitude conditions the vehicle expected to exhibit the highest emissions from the nonexempt vehicles selected in accordance with §86.094–24(b)(1) (ii), (iii), and (iv); or

(B) In lieu of testing vehicles according to paragraph (b)(1)(v)(A) of this section, a manufacturer may provide a statement in its application for certification that, based on the manufacturer's engineering evaluation of such high-altitude emission testing as the manufacturer deems appropriate that all light-duty vehicles and light-duty trucks not exempt under §86.090–8(h) or §86.094–9(h) comply with the emission standards at high altitude.

(vi) If 90 percent or more of the engine family sales will be in California, a manufacturer may substitute emission data vehicles selected by the California Air Resources Board criteria for the selections specified in §86.094–24(b)(1) (i), (ii), and (iv).

(vii)(A) Vehicles of each evaporative emission family will be divided into evaporative emission control systems.

(B) The Administrator will select the vehicle expected to exhibit the highest evaporative emissions, from within each evaporative family to be certified, from among the vehicles represented by the exhaust emission data selections for the engine family, unless evaporative testing has already been completed on the vehicle expected to exhibit the highest evaporative emissions for the evaporative family as part of another engine family's testing.

(C) If the vehicles selected in accordance with paragraph (b)(1)(vii)(B) of this section do not represent each evaporative emission control system then the Administrator will select the highest expected evaporative emission vehicle from within the unrepresented evaporative system.

(viii) For high-altitude evaporative emission compliance for each evaporative emission family, the manufacturer shall follow one of the following procedures:

(A) The manufacturer will select for testing under high-altitude conditions the one nonexempt vehicle previously selected under paragraph (b)(1)(vii) (B) or (C) of this section which is expected to have the highest level of evaporative emissions when operated at high altitude; or

(B) In lieu of testing vehicles according to §86.094–24(b)(1)(viii)(A), a manufacturer may provide a statement in its application for certification that,

based on the manufacturer's engineering evaluation of such high-altitude emission testing as the manufacturer deems appropriate, that all light-duty vehicles and light-duty trucks not exempt under § 86.090–8(h) or § 86.094–9(h) comply with the emission standards at high altitude.

(ix) Vehicles selected under paragraph (b)(1)(v)(A) of this section may be used to satisfy the requirements of paragraph (b)(1)(viii)(A) of this section.

(x) [Reserved]

(b)(2) through (h) [Reserved]. For guidance see § 86.094–24.

[58 FR 4035, Jan. 12, 1993]

§ 86.095–26 Mileage and service accumulation; emission measurements.

Section 86.095–26 includes text that specifies requirements that differ from § 86.094–26. Where a paragraph in § 86.094–26 is identical and applicable to § 86.095–26, this may be indicated by specifying the corresponding paragraph and the statement ''[Reserved]. For guidance see § 86.094–26.'' Where a corresponding paragraph of § 86.094–26 is not applicable, this is indicated by the statement ''[Reserved].''

(a) through (b)(4)(i)(C) [Reserved]. For guidance see § 86.094–26.

(b)(4)(i)(D) For each engine family, the manufacturer will either select one vehicle previously selected under § 86.094–24(b)(1) (i) through (iv) to be tested under high altitude conditions or provide a statement in accordance with § 86.095–24(b)(1)(v). Vehicles shall meet emission standards under both low- and high-altitude conditions without manual adjustments or modifications. In addition, any emission control device used to conform with the emission standards under high-altitude conditions shall initially actuate (automatically) no higher than 4,000 feet above sea level.

(ii) *Diesel*. (A) The manufacturer shall determine, for each engine family, the mileage at which the engine-system combination is stabilized for emission data testing. The manufacturer shall maintain, and provide to the Administrator if requested, a record of the rationale used in making this determination. The manufacturer may elect to accumulate 4,000 miles on each test vehicle within an engine family without making a determination. The manufacturer must accumulate a minimum of 2,000 miles (3,219 kilometers) on each test vehicle within an engine family. All test vehicle mileage must be accurately determined, recorded, and reported to the Administrator. Any vehicle used to represent emission data vehicle selections under § 86.094–24(b)(1) shall be equipped with an engine and emission control system that has accumulated the mileage the manufacturer chose to accumulate on the test vehicle. Fuel economy data generated from certification vehicles selected in accordance with § 86.094–24(b)(1) with engine-system combinations that have accumulated more than 10,000 kilometers (6,200 miles) shall be factored in accordance with § 600.006–87(c) of this chapter. Complete exhaust emission tests shall be conducted for each emission data vehicle selection under § 86.094–24(b)(1). The Administrator may determine under § 86.094–24(f) that no testing is required.

(B) Emission tests for emission data vehicle(s) selected for testing under § 86.094–24(b)(1)(v) shall be conducted at the mileage (2,000 mile minimum) at which the engine-system combination is stabilized for emission testing or at the 6,436 kilometer (4,000 mile) test point under high-altitude conditions.

(C) Exhaust and evaporative emission tests for emission data vehicle(s) selected for testing under § 86.094–24(b)(1) (ii), (iii), and (iv) shall be conducted at the mileage (2,000 mile minimum) at which the engine-system combination is stabilized for emission testing or at the 6,436 kilometer (4,000 mile) test point under low-altitude conditions.

(D) For each engine family, the manufacturer will either select one vehicle previously selected under § 86.094–26(b)(1) (i) through (iv) to be tested under high altitude conditions or provide a statement in accordance with § 86.095–24(b)(1)(v). Vehicles shall meet emission standards under both low- and high-altitude conditions without manual adjustments or modifications. In addition, any emission control device used to conform with the emission standards under high-altitude conditions shall initially actuate (automatically) no higher than 4,000 feet above sea level.

(b)(4)(iii) through (d) [Reserved]. For guidance see §86.094–26.

[58 FR 4036, Jan. 12, 1993]

§86.095–30 Certification.

Section 86.095–30 includes only text that specifies requirements that differ from §86.094–30. Where a paragraph in §86.094–30 is identical and applicable to §86.095–30, this is indicated by specifying the corresponding paragraph and the statement ''[Reserved]. For guidance see §86.094–30.'' Where a corresponding paragraph of §86.094–30 is not applicable, this is indicated by the statement ''[Reserved].''

(a)(1)(i) through (a)(2) [Reserved]. For guidance see §86.094–30.

(a)(3)(i) One such certificate will be issued for each engine family. For gasoline-fueled and methanol-fueled light-duty vehicles and light-duty trucks, one such certificate will be issued for each engine family evaporative emission family combination. Each certificate will certify compliance with no more than one set of in-use and certification standards (or family emission limits, as appropriate).

(ii) For gasoline-fueled and methanol fueled heavy-duty vehicles, one such certificate will be issued for each manufacturer and will certify compliance for those vehicles previously identified in that manufacturer's statement(s) of compliance as required in §86.094–23(b)(4) (i) and (ii).

(iii) For diesel light-duty vehicles and light-duty trucks, or diesel heavy-duty engines, included in the applicable particulate averaging program, the manufacturer may at any time during production elect to change the level of any family particulate emission limit by demonstrating compliance with the new limit as described in §§86.094–28(a)(6) and 86.094–28(b)(5)(i). New certificates issued under this paragraph will be applicable only for vehicles (or engines) produced subsequent to the date of issuance.

(iv) For light-duty trucks or heavy-duty engines included in the applicable NO_X averaging program, the manufacturer may at any time during production elect to change the level of any family NO_X emission limit by demonstrating compliance with the new limit as described in §86.094–28(b)(5)(ii). New certificates issued under this paragraph will be applicable only for vehicles (or engines) produced subsequent to the day of issue.

(4)(i) For exempt light-duty vehicles and light-duty trucks under the provisions of §§86.094–8(j) or 86.094–9(j), an adjustment or modification performed in accordance with instructions provided by the manufacturer for the altitude where the vehicle is principally used will not be considered a violation of section 203(a)(3) of the Clean Air Act (42 U.S.C. 7522(a)(3)).

(ii) A violation of section 203(a)(1) of the Clean Air Act (42 U.S.C. 7522(a)(1)) occurs when a manufacturer sells or delivers to an ultimate purchaser any light-duty vehicle or light-duty truck, subject to the regulations under the Act, under any of the conditions specified in paragraph (a)(4)(ii) of this section.

(A) When a light-duty vehicle or light-duty truck is exempted from meeting high-altitude requirements as provided in §86.090–8(h) or §86.094–9(h):

(*1*) At a designated high-altitude location, unless such manufacturer has reason to believe that such vehicle will not be sold to an ultimate purchaser for principal use at a designated high-altitude location; or

(*2*) At a location other than a designated high-altitude location, when such manufacturer has reason to believe that such motor vehicle will be sold to an ultimate purchaser for principal use at a designated high-altitude location.

(B) When a light-duty vehicle or light-duty truck is exempted from meeting low-altitude requirements as provided in §86.094–8(i) or §86.094–9(i):

(*1*) At a designated low-altitude location, unless such manufacturer has reason to believe that such vehicle will not be sold to an ultimate purchaser for principal use at a designated low-altitude location; or

(*2*) At a location other than a designated low-altitude location, when such manufacturer has reason to believe that such motor vehicle will be sold to an ultimate purchaser for principal use at a designated low-altitude location.

(iii) A manufacturer shall be deemed to have reason to believe that a light-

duty vehicle or light-duty truck that has been exempted from compliance with emission standards at high altitude, will not be sold to an ultimate purchaser for principal use at a designated high altitude location if the manufacturer has informed its dealers and field representatives about the terms of those high altitude regulations, has not caused the improper sale itself, and has taken reasonable action which shall include, but shall not be limited to, either § 86.094–30(a)(4)(iii)(A) or (B), and § 86.094–30(a)(4)(iii)(C).

(a)(4)(iii)(A) through (C) [Reserved]. For guidance see § 86.094–30.

(a)(4)(iv) A manufacturer shall be deemed to have reason to believe that a light-duty vehicle or light-duty truck which has been exempted from compliance with emission standards at low altitude, as provided in § 86.094–8(i) or § 86.094–9(i), will not be sold to an ultimate purchaser for principal use at a designated low-altitude location if the manufacturer has informed its dealers and field representatives about the terms of the high-altitude regulations, has not caused the improper sale itself, and has taken reasonable action which shall include, but not be limited to either § 86.094–30 (a)(4)(iv) (A) or (B) and § 86.094–30(a)(4)(iv)(C):

(a)(4)(iv)(A) through (a)(12) [Reserved]. For guidance see § 86.094–30.

(a)(13) For all light-duty trucks certified to Tier 0 standards under § 86.094–9 and to which standards under § 86.709–94 are applicable:

(i) All certificates issued are conditional upon the manufacturer complying with all provisions of §§ 86.094–9 and 86.709–94 both during and after model year production.

(ii) Failure to meet the required implementation schedule sales percentages as specified in §§ 86.094–9 and 86.709–94 will be considered to be a failure to satisfy the conditions upon which the certificate(s) was issued and the individual vehicles sold in violation of the implementation schedule shall not be covered by the certificate.

(iii) The manufacturer shall bear the burden of establishing to the satisfaction of the Administrator that the conditions upon which the certificate was issued were satisfied.

(a)(14) through (e)(8) [Reserved]. For guidance see § 86.094–30.

(f) For engine families required to have an emission control diagnostic system, certification will not be granted if, for any emission data vehicle or other test vehicle approved by the Administrator, the malfunction indicator light does not illuminate under any of the following circumstances, or if, for any assembly line vehicle, the malfunction indicator light does not illuminate under the circumstances described in paragraph (f)(4) of this section. Only paragraph (f)(4) of this section applies for diesel cycle vehicles.

(1) A catalyst is replaced with a deteriorated or defective catalyst or electronic simulation of such resulting in both an exhaust emission exceedance of 0.6 g/mi HC and an exhaust emission increase of 0.4 g/mi HC on a normal temperature (20 to 30 °C) emission certification test.

(2) A misfire condition is induced resulting in an increase in emissions of greater than 0.4 g/mi HC or 3.4 g/mi CO or 1.0 g/mi NO_X on a normal temperature (20 to 30 °C) emission certification test.

(3) Any oxygen sensor is replaced with a deteriorated or defective oxygen sensor, or the operation of such a sensor is simulated, resulting in an increase in emissions of 0.2 g/mi HC or 1.7 g/mi CO or 0.5 g/mi NO_X on a normal temperature (20 to 30 °C) emission certification test.

(4) The electronic evaporative purge control device (if equipped) is disconnected or the operation of any emission-related powertrain component connected to a computer results in an increase in emissions of 0.2 g/mi HC or 1.7 g/mi CO or 0.5 g/mi NO_X on a normal temperature (20 to 30 °C) emission certification test.

[58 FR 4037, Jan. 12, 1993, as amended at 58 FR 9487, Feb. 19, 1993; 60 FR 15247, Mar. 23, 1995]

§ 86.095–35 Labeling.

Section 86.095–35 includes text that specifies requirements that differ from § 86.092–35. Where a paragraph in § 86.092–35 is identical and applicable to § 86.095–35, this may be indicated by specifying the corresponding paragraph and the statement ''[Reserved]. For

guidance see § 86.092–35.'' Where a corresponding paragraph of § 86.092–35 is not applicable, this is indicated by the statement ''[Reserved].''

(a) The manufacturer of any motor vehicle (or motor vehicle engine) subject to the applicable emission standards (and family emission limits, as appropriate) of this subpart, shall, at the time of manufacture, affix a permanent legible label, of the type and in the manner described below, containing the information hereinafter provided, to all production models of such vehicles (or engines) available for sale to the public and covered by a Certificate of Conformity under § 86.091–30(a).

(1) *Light-duty vehicles.* (i) A permanent, legible label shall be affixed in a readily visible position in the engine compartment.

(ii) The label shall be affixed by the vehicle manufacturer who has been issued the Certificate of Conformity for such vehicle, in such manner that it cannot be removed without destroying or defacing the label. The label shall not be affixed to any equipment which is easily detached from such vehicle.

(iii) The label shall contain the following information lettered in the English language in block letters and numerals, which shall be of a color that contrasts with the background of the label:

(A) The label heading: Vehicle Emission Control Information;

(B) Full corporate name and trademark of manufacturer;

(C) Engine displacement (in cubic inches or liters), engine family identification, and evaporative family identification;

(D) Engine tune-up specifications and adjustments, as recommended by the manufacturer in accordance with the applicable emission standards (or family emission limits, as applicable), including but not limited to idle speed(s), ignition timing, the idle air-fuel mixture setting procedure and value (e.g., idle CO, idle air-fuel ratio, idle speed drop), high idle speed, initial injection timing and valve lash (as applicable), as well as other parameters deemed necessary by the manufacturer. These specifications should indicate the proper transmission position during tuneup and what accessories (e.g., air conditioner), if any, should be in operation;

(E) An unconditional statement of compliance with the appropriate model year U.S. Environmental Protection Agency regulations which apply to light-duty vehicles;

(F) The exhaust emission standards (or family emission limits, if applicable) to which the engine family is certified, and the corresponding exhaust emission standards (or family emission limits, if applicable) which the engine family must meet in-use;

(G) For vehicles that have been exempted from compliance with the emission standards at high altitude, as specified in § 86.090–8(h):

(*1*) A highlighted statement (e.g., underscored or boldface letters) that the vehicle is certified to applicable emission standards at low altitude only;

(*2*) A statement that the vehicle's unsatisfactory performance under high-altitude conditions makes it unsuitable for principal use at high altitude; and

(*3*) A statement that the emission performance warranty provisions of 40 CFR part 85, subpart V do not apply when the vehicle is tested at high altitude;

(H) For vehicles that have been exempted from compliance with the emission standards at low altitude, as specified in § 86.094–8(i):

(*1*) A highlighted statement (e.g., underscore or boldface letters) that the vehicle is certified to applicable emission standards at high altitude only; and

(*2*) A statement that the emission performance warranty provisions of 40 CFR part 85, subpart V do not apply when the vehicle is tested at low altitude;

(I) The vacuum hose routing diagram applicable to the vehicles if the vehicles are equipped with vacuum actuated emission and emission-related components. The manufacturer may, at its option, use a separate label for the vacuum hose routing diagram provided that the vacuum hose diagram is placed in a visible and accessible position as provided in this section;

(J) Vehicles granted final admission under § 85.1505 of this chapter must comply with the labeling requirements contained in § 85.1510 of this chapter.

(K) Vehicles which have been certified under the provisions of § 86.094–8(j) must comply with the labeling requirements contained in § 86.1606.

(L) If applicable, a statement that the vehicle is exempt from cold temperature carbon monoxide standards.

(2) *Light-duty truck and heavy-duty vehicles optionally certified in accordance with the light-duty truck provisions.* (i) A legible, permanent label shall be affixed in a readily visible position in the engine compartment.

(ii) The label shall be affixed by the vehicle manufacturer who has been issued the certificate of conformity for such vehicle, in such a manner that it cannot be removed without destroying or defacing the label. The label shall not be affixed to any equipment which is easily detached from such vehicle.

(iii) The label shall contain the following information lettered in the English language in block letters and numerals, which shall be of a color that contrasts with the background of the label.

(A) The label heading: Important Vehicle Information;

(B) Full corporate name and trademark of the manufacturer;

(C) Engine displacement (in cubic inches or liters), engine family identification, and evaporative family;

(D) Engine tune-up specifications and adjustments, as recommended by the manufacturer in accordance with the applicable emission standards (or family emission limits, as appropriate), including but not limited to idle speed(s), ignition timing, the idle air-fuel mixture setting procedure and value (e.g., idle CO, idle air-fuel ratio, idle speed drop), high idle speed, initial injection timing, as well as other parameters deemed necessary by the manufacturer. These specifications should indicate the proper transmission position during tune-up and what accessories (e.g., air conditioner), if any, should be in operation;

(E)(*1*) *Light-duty trucks.* The prominent statement, ''This vehicle conforms to U.S. EPA regulations applicable to 19XX Model Year New Light-Duty Trucks.''

(*2*) *Heavy-duty vehicles optionally certified in accordance with the light-duty truck provisions.* The prominent statement, ''This heavy-duty vehicle conforms to the U.S. EPA regulations applicable to 19XX Model Year Light-Duty Trucks under the special provision of 40 CFR 86.092–1(b).'';

(F) [Reserved]

(G) For light-duty trucks that have been exempted from compliance with the emission standards at high altitude, as specified in § 86.094–9(h):

(*1*) A highlighted statement (e.g., underscored or boldface letters) that the vehicle is certified to applicable emission standards at low altitude only;

(*2*) A statement that the vehicle's unsatisfactory performance under high-altitude conditions makes it unsuitable for principal use at high altitude; and

(*3*) A statement that the emission performance warranty provisions of 40 CFR part 85, subpart V do not apply when the vehicle is tested at high altitude;

(H) For light-duty trucks that have been exempted from compliance with the emission standards at low altitude, as specified in § 86.094–9(i):

(*1*) A highlighted statement (e.g., underscored or boldface letters) that the vehicle is certified to applicable emission standards at high altitude only; and

(*2*) A statement that the emission performance warranty provisions of 40 CFR part 85, subpart V do not apply when the vehicle is tested at low altitude;

(I) Light-duty trucks which have been certified under the provisions of § 86.094–9(j) must comply with the labeling requirements contained in § 86.1606;

(J) The exhaust emission standards (or family emission limits, if applicable) to which the engine family is certified, and the corresponding exhaust emission standards (or family emission limits, if applicable) which the engine family must meet in-use.

(K) The vacuum hose routing diagram applicable to the vehicles if the vehicles are equipped with vacuum actuated emission and emission-related components. The manufacturer may, at its option, use a separate label for the vacuum hose routing diagram provided that the vacuum hose diagram is placed in a visible and accessible position as provided by this section.

(L) [Reserved]

(M) Vehicles granted final admission under § 85.1505 of this chapter must comply with the labeling requirements contained in § 85.1510 of this chapter.

(N) If applicable, a statement that the vehicle is exempt from cold temperature carbon monoxide standards.

(3) *Heavy-duty engines.* (i) A permanent legible label shall be affixed to the engine in a position in which it will be readily visible after installation in the vehicle.

(ii) The label shall be attached to an engine part necessary for normal engine operation and not normally requiring replacement during engine life.

(iii) The label shall contain the following information lettered in the English language in block letters and numerals which shall be of a color that contrasts with the background of the label:

(A) The label heading: ''Important Engine Information.'';

(B) Full corporate name and trademark of manufacturer;

(C) Engine displacement (in cubic inches or liters) and engine family and model designations;

(D) Date of engine manufacture (month and year). The manufacturer may, in lieu of including the date of manufacture on the engine label, maintain a record of the engine manufacture dates. The manufacturer shall provide the date of manufacture records to the Administrator upon request;

(E) Engine specifications and adjustments as recommended by the manufacturer. These specifications should indicate the proper transmission position during tune-up and what accessories (e.g., air conditioner), if any, should be in operation;

(F) For Otto-cycle engines the label should include the idle speed, ignition timing, and the idle air-fuel mixture setting procedure and value (e.g., idle CO, idle air-fuel ratio, idle speed drop), and valve lash;

(G) For diesel engines the label should include the advertised hp at rpm, fuel rate at advertised hp in mm^3/stroke, valve lash, initial injection timing, and idle speed;

(H) The prominent statement: ''This engine conforms to U.S. EPA regulations applicable to 19XX Model Year New Heavy-Duty Engines.'';

(I) If the manufacturer is provided with an alternate useful life period under the provisions of § 86.094–21(f), the prominent statement: ''This engine has been certified to meet U.S. EPA standards for a useful-life period of XXX miles or XXX hours of operation, whichever occurs first. This engine's actual life may vary depending on its service application.'' The manufacturer may alter this statement only to express the assigned alternate useful life in terms other than miles or hours (e.g., years, or hours only);

(J) *For diesel engines.* The prominent statement: ''This engine has a primary intended service application as a XXX heavy-duty engine.'' (The primary intended service applications are light, medium, and heavy, as defined in § 86.902–2.);

(K) *For Otto-cycle engines.* One of the following statements, as applicable:

(*1*) For engines certified to the emission standards under § 86.091–10 (a)(1)(i) or (iii), the statement: ''This engine is certified for use in all heavy-duty vehicles.'';

(*2*) For gasoline-fueled engines certified under the provisions of § 86.091–10(a)(3)(i), the statement: ''This engine is certified for use in all heavy-duty vehicles under the special provision of 40 CFR 86.091–10(a)(3)(i).'';

(*3*) For engines certified to the emission standards under § 86.091–10(a)(1) (ii) or (iv), the statement: ''This engine is certified for use only in heavy-duty vehicles with a gross vehicle weight rating above 14,000 lbs.'';

(L) For diesel engines which are included in the diesel heavy-duty particulate averaging program, the family particulate emission limit to which the engine is certified;

(M) For any heavy-duty engines which are included in the heavy-duty NO_X averaging program, the family NO_X emission limit to which the engine is certified;

(N) Engines granted final admission under § 85.1505 of this chapter must comply with the labeling requirements contained in § 85.1510 of this chapter.

(O) For diesel engines which have been certified to comply with the urban bus particulate standard of 40 CFR 86.094–11(a)(1)(iv)(A), the statement ''This engine is certified for use

in an urban bus as defined at 40 CFR 86.093–2.'' Unless waived by the Administrator on the basis of impracticality, for diesel engines not certified to comply with the urban bus particulate standard, the statement ''This engine is not certified for use in an urban bus as defined at 40 CFR 86.093–2. Sales of this engine for use in an urban bus is a violation of Federal law under the Clean Air Act.''

(iv) The label may be made up of one or more pieces: Provided, That all pieces are permanently attached to the same engine or vehicle part as applicable.

(4) *Heavy-duty vehicles employing a fuel or fuels covered by evaporative emission standards.* (i) A permanent, legible label shall be affixed in a readily visible position in the engine compartment. If such vehicles do not have an engine compartment, the label required in paragraphs (a)(4) and (g)(1) of this section shall be affixed in a readily available position on the operator's enclosure or on the engine.

(ii) The label shall be affixed by the vehicle manufacturer who has been issued the Certificate of Conformity for such vehicle, in such a manner that it cannot be removed without destroying or defacing the label. The label shall not be affixed to any equipment which is easily detached from such vehicle.

(iii) The label shall contain the following information lettered in the English language in block letters and numerals, which shall be of a color that contrasts with the background of the label:

(A) The label heading: Vehicle Emission Control Information;

(B) Full corporate name and trademark of manufacturer;

(C) Evaporative family identification;

(D) The maximum nominal fuel tank capacity (in gallons) for which the evaporative control system is certified (this requirement does not apply to vehicles whose evaporative control system efficiency is not dependent on fuel tank capacity); and

(E) An unconditional statement of compliance with the appropriate model year U.S. Environmental Protection Agency regulations which apply to XXX-fueled heavy-duty vehicles.

(F) Vehicles granted final admission under § 85.1505 of this chapter must comply with the labeling requirements contained in § 85.1510 of this chapter.

(b) The provisions of this section shall not prevent a manufacturer from also reciting on the label that such vehicle (or engine) conforms to any applicable state emission standards for new motor vehicles (or new motor vehicle engines) or any other information that such manufacturer deems necessary for, or useful to, the proper operation and satisfactory maintenance of the vehicle (or engine).

(c)(1) The manufacturer of any light-duty vehicle or light-duty truck subject to the emission standards (or family emission limits, as appropriate) of this subpart shall, in addition and subsequent to setting forth those statements on the label required by the Department of Transportation (DOT) pursuant to 49 CFR 567.4, set forth on the DOT label or an additional label located in proximity to the DOT label and affixed as described in 49 CFR 567.4(b), the following information in the English language, lettered in block letters and numerals not less than three thirty-seconds of an inch high, of a color that contrasts with the background of the label:

(i) The heading: ''Vehicle Emission Control Information.''

(ii)(A) *For light-duty vehicles,* the statement: ''This Vehicle Conforms to U.S. EPA Regulations Applicable to XXX-Fueled 19XX Model Year New Motor Vehicles.''

(B) *For light-duty trucks, (1)* the statement: ''This vehicle conforms to U.S. EPA regulations applicable to XXX-Fueled 19XX Model Year New Light-Duty Trucks.''

(*2*) [Reserved]

(iii) One of the following statements, as applicable, in letters and numerals not less than six thirty-seconds of an inch high and of a color that contrasts with the background of the label:

(A) For all vehicles certified as non-catalyst-equipped: ''NON-CATALYST'';

(B) For all vehicles certified as catalyst-equipped which are included in a manufacturer's catalyst control program for which approval has been given by the Administrator: ''CATALYST—APPROVED FOR IMPORT'';

(C) For all vehicles certified as catalyst-equipped which are not included in a manufacturer's catalyst control program for which prior approval has been given by the Administrator: ''CATALYST''.

(2) In lieu of selecting either of the labeling options of paragraph (c)(1) of this section, the manufacturer may add the information required by paragraph (c)(1)(iii) of this section to the label required by paragraph (a) of this section. The required information will be set forth in the manner prescribed by paragraph (c)(1)(iii) of this section.

(d) Incomplete light-duty trucks or incomplete heavy-duty vehicles optionally certified in accordance with the light-duty truck provisions shall have one of the following prominent statements, as applicable, printed on the label required by paragraph (a)(2) of this section in lieu of the statement required by paragraph (a)(2)(iii)(E) of this section.

(1) *Light-duty trucks.* The statement, ''This vehicle conforms to U.S. EPA regulations applicable to 19XX Model Year New Light-Duty Trucks when it does not exceed XX pounds in curb weight, XX pounds in gross vehicle weight rating, and XX square feet in frontal area.''

(2) *Heavy-duty vehicles optionally certified in accordance with the light-duty truck provisions.* ''This heavy-duty vehicle conforms to the U.S. EPA regulations applicable to 19XX Model Year Light-Duty Trucks under the special provision of 40 CFR 86.085–1(b) when it does not exceed XXX pounds in curb weight, XXX pounds in gross vehicle weight rating, and XXX square feet in frontal area.''

(e) Incomplete heavy-duty vehicles having a gross vehicle weight rating of 8,500 pounds or less shall have one of the following statements printed on the label required by paragraph (a)(3) of this section in lieu of the statement required by paragraph (a)(3)(iii)(H) of this section: ''This engine conforms to U.S. EPA regulations applicable to 19XX Model Year Heavy-Duty Engines when installed in a vehicle completed at a curb weight of more than 6,000 pounds or with a frontal area of greater than 45 square feet.''

(f) The manufacturer of any incomplete light-duty vehicle or light-duty truck shall notify the purchaser of such vehicle of any curb weight, frontal area, or gross vehicle weight rating limitations affecting the emission certificate applicable to that vehicle. This notification shall be transmitted in a manner consistent with National Highway Traffic Safety Administration safety notification requirements published in 49 CFR part 568.

(g) *Incomplete vehicle fuel tank capacity.* (1) Incomplete heavy-duty vehicles employing a fuel or fuels which are nominally liquid at normal atmospheric pressure and temperature for which evaporative emission standards exist shall have the following prominent statement printed on the label required in paragraph (a)(4) of this section: ''Manufacturer's corporate name) has determined that this vehicle conforms to U.S. EPA regulations applicable to 19XX Model Year New XXX-Fueled Heavy-Duty Vehicles when completed with a nominal fuel tank capacity not to exceed XXX gallons. Persons wishing to add fuel tank capacity beyond the above maximum must submit a written statement to the Administrator that the hydrocarbon storage system has been upgraded according to the requirements of 40 CFR 86.095–35(g)(2).''

(2) Persons wishing to add fuel tank capacity beyond the maximum specified on the label required in paragraph (g)(1) of this section shall:

(i) Increase the amount of fuel tank vapor storage material according to the following function:

$$\mathrm{Cap}_f = \mathrm{Cap}_i\left(\frac{\text{T. Vol.}}{\text{Max. Vol.}}\right)$$

Where:

Cap_f=final amount of fuel tank vapor storage material, grams.

Cap_i=initial amount of fuel tank vapor storage material, grams.

T. Vol.=total fuel tank volume of completed vehicle, gallons.

Max. Vol. = maximum fuel tank volume as specified on the label required in paragraph (g)(1) of this section, gallons.

(ii) Use, if applicable, hosing for fuel vapor routing which is at least as impermeable to hydrocarbon vapors as

that used by the primary manufacturer.

(iii) Use vapor storage material with the same absorptive characteristics as that used by the primary manufacturer.

(iv) Connect, if applicable, any new hydrocarbon storage device to the existing hydrocarbon storage device in series such that the original hydrocarbon storage device is situated between the fuel tank and the new hydrocarbon storage device. The original hydrocarbon storage device shall be sealed such that vapors cannot reach the atmosphere. The elevation of the original hydrocarbon storage device shall be equal to or lower than the new hydrocarbon storage device.

(v) Submit a written statement to the Administrator that paragraphs (g)(2)(i) through (g)(2)(iv) of this section have been complied with.

(3) If applicable, the Administrator will send a return letter verifying the receipt of the written statement required in paragraph (g)(2)(v) of this section.

(h) *Notification of nonconformance penalty*. (1) Light-duty trucks and heavy-duty vehicles and engines for which nonconformance penalties are to be paid in accordance with § 86.1113–87(b) shall have the following information printed on the label required in paragraph (a) of this section. The manufacturer shall begin labeling production engines or vehicles within 10 days after the completion of the PCA. This statement shall read: ''The manufacturer of this engine/vehicle will pay a nonconformance penalty to be allowed to introduce it into commerce at an emission level higher than the applicable emission standard. The compliance level (or new emission standard) for this engine/vehicle is XXX.'' (The manufacturer shall insert the applicable pollutant and compliance level calculated in accordance with § 86.1112–87(a).)

(2) If a manufacturer introduces an engine or vehicle into commerce prior to the compliance level determination of § 86.1112–87(a), it shall provide the engine or vehicle owner with a label as described above to be affixed in a location in proximity to the label required in paragraph (a) of this section within 30 days of the completion of the PCA.

(i) All light-duty vehicles and light-duty trucks shall comply with SAE Recommended Practices J1877 ''Recommended Practice for Bar-Coded Vehicle Identification Number Label,'' (MAY88), and J1892 ''Recommended Practice for Bar-Coded Vehicle Emission Configuration Label,'' (MAY88) except that label characters 3 through 7 as specified in J1892 shall be consistent with the standardized engine family name as revised by EPA for the applicable model year. SAE J1877 and J1892 are incorporated by reference. This incorporation by reference was approved by the Director of the Federal Register in accordance with 5 U.S.C. 552(a) and 1 CFR part 51. Copies may be obtained from the Society of Automotive Engineers, Inc., 400 Commonwealth Drive, Warrendale, PA 15096–0001. Copies may be inspected at Docket No. A–90–35 at EPA's Air Docket (LE–131), room 1500M, 1st Floor, Waterside Mall, 401 M Street, SW., Washington, DC, or at the Office of the Federal Register, 800 North Capitol Street, NW., suite 700, Washington, DC.

[56 FR 25755, June 5, 1991, as amended at 57 FR 31913, July 17, 1992; 58 FR 4037, Jan. 12, 1993; 58 FR 9487, Feb. 19, 1993; 58 FR 15799, Mar. 24, 1993; 58 FR 16020, Mar. 24, 1993; 58 FR 33209, June 16, 1993; 58 FR 34536, June 28, 1993; 59 FR 48499, Sept. 21, 1994]

§ 86.096–2 Definitions.

The definitions listed in this section apply beginning with the 1996 model year. The definitions of § 86.094–2 continue to apply to 1996 and later model year vehicles.

Certification Short Test means the test, for gasoline-fueled Otto-cycle light-duty vehicles and light-duty trucks, performed in accordance with the procedures contained in 40 CFR part 86 subpart O.

Diurnal breathing losses means diurnal emissions.

Diurnal emissions means evaporative emissions resulting from the daily cycling of ambient temperatures.

Hot soak emissions means evaporative emissions after termination of engine operation.

Hot-soak losses means hot soak emissions.

Resting losses means evaporative emissions that may occur continuously, that are not diurnal emissions, hot soak emissions, running losses, or spitback emissions.

Running losses means evaporative emissions that occur during vehicle operation.

Spitback emissions means evaporative emissions resulting from the loss of liquid fuel that is emitted from a vehicle during a fueling operation.

Useful life means:

(1) For light-duty vehicles, and for light light-duty trucks not subject to the Tier 0 standards of §86.094–9(a), intermediate useful life and/or full useful life. Intermediate useful life is a period of use of 5 years or 50,000 miles, whichever occurs first. Full useful life is a period of use of 10 years or 100,000 miles, whichever occurs first, except as otherwise noted in §86.094–9. The useful life of evaporative emission control systems on the portion of these vehicles subject to the evaporative emission test requirements of §86.130–96 is defined as a period of use of 10 years or 100,000 miles, whichever occurs first.

(2) For light light-duty trucks subject to the Tier 0 standards of §86.094–9(a), and for heavy light-duty truck engine families, intermediate and/or full useful life. Intermediate useful life is a period of use of 5 years or 50,000 miles, whichever occurs first. Full useful life is a period of use of 11 years or 120,000 miles, whichever occurs first. The useful life of evaporative emission control systems on the portion of these vehicles subject to the evaporative emission test requirements of §86.130–96 is also defined as a period of 11 years or 120,000 miles, whichever occurs first.

(3) For an Otto-cycle heavy-duty engine family, a period of use of 8 years or 110,000 miles, whichever occurs first, except for the portion of evaporative emission control systems subject to the evaporative emission test requirements of §86.1230–96, for which the applicable period of use is 10 years or 110,000 miles, whichever occurs first.

(4) For a diesel heavy-duty engine family:

(i) For light heavy-duty diesel engines, period of use of 8 years or 110,000 miles, whichever occurs first.

(ii) For medium heavy-duty diesel engines, a period of use of 8 years or 185,000 miles, whichever occurs first.

(iii) For heavy heavy-duty diesel engines, a period of use of 8 years or 290,000 miles, whichever occurs first, except as provided in paragraph (4)(iv) of this definition.

(iv) For heavy heavy-duty diesel engines used in urban buses, for the particulate standard, a period of use of 10 years or 290,000 miles, whichever occurs first.

(5) As an option for both light-duty trucks under certain conditions and heavy-duty engine families, an alternative useful life period assigned by the Administrator under the provisions of §86.094–21(f).

(6) The useful-life period for purposes of the emissions defect warranty and emissions performance warranty shall be a period of 5 years/50,000 miles, whichever occurs first, for light-duty trucks, Otto-cycle heavy-duty engines and light heavy-duty diesel engines. For all other heavy-duty diesel engines the aforementioned period is 5 years/100,000 miles, whichever occurs first. However, in no case may this period be less than the manufacturer's basic mechanical warranty period for the engine family.

[58 FR 16020, Mar. 24, 1993, as amended at 58 FR 58417, Nov. 1, 1993]

§86.096–3 Abbreviations.

(a) The abbreviations in §86.094–3 continue to apply. The abbreviation in this section applies beginning with the 1996 model year.

(b) The abbreviation in this section applies to this subpart and to subpart O of this part, and has the following meaning:

CST—Certification Short Test

[58 FR 58417, Nov. 1, 1993]

§86.096–7 Maintenance of records; submittal of information; right of entry.

Section 86.096–7 includes text that specifies requirements that differ from those specified in §§86.091–7 and 86.094–7. Where a paragraph in §86.091–7 or §86.094–7 is identical and applicable to §86.096–7, this may be indicated by specifying the corresponding paragraph

and the statement ''[Reserved]. For guidance see § 86.091–7.'' or ''[Reserved]. For guidance see § 86.094–7.''

(a) Introductory text through (a)(2) [Reserved]. For guidance see § 86.091–7.

(a)(3)—(h)(5) [Reserved]. For guidance see § 86.094–7.

(h)(6) *Voiding a certificate.* (i) EPA may void *ab initio* a certificate for a vehicle certified to Tier 0 certification standards or to the respective evaporative test procedure and accompanying evaporative standards as set forth or otherwise referenced in § 86.090–8, § 86.090–9, § 86.091–10 or § 86.094–11 for which the manufacturer fails to retain the records required in this section or to provide such information to the Administrator upon request.

(ii) EPA may void ab initio a certificate for a 1994 or 1995 model year light-duty vehicle or light-duty truck that is not certified in compliance with the cold temperature CO standard for which the manufacturer fails to retain the records required in this section or to provide such information to the Administrator upon request.

(iii) Any voiding ab initio of a certificate under § 86.091–7(c)(6) and paragraph (h)(6) of this section will be made only after the manufacturer concerned has been offered an opportunity for a hearing conducted in accordance with § 86.614 for light-duty vehicles or under § 86.1014 for light-duty trucks and heavy-duty engines.

(7) The manufacturer (or contractor for the manufacturer, if applicable) of any new model 1996 through 1998 light-duty vehicle, light-duty truck or heavy-duty vehicle that is certified shall establish, maintain and retain the following adequately organized and indexed records for each such vehicle:

(i) EPA engine family;

(ii) Vehicle identification number;

(iii) Model year and production date;

(iv) Shipment date;

(v) Purchaser;

(vi) Purchase contract; and

(vii) EPA evaporative family.

[58 FR 16021, Mar. 24, 1993, as amended at 58 FR 34535, June 28, 1993]

§ 86.096–8 Emission standards for 1996 and later model year light-duty vehicles.

(a)(1) *Standards.* (i) Exhaust emissions from 1996 and later model year light-duty vehicles (optional for 1996 model year natural gas-fueled and liquefied petroleum gas-fueled light-duty vehicles) shall meet all standards in Tables A96–1 and A96–2 in the rows designated with the applicable fuel type. Light-duty vehicles shall not exceed the applicable standards in table A96–1 and shall not exceed the applicable standards in table A96–2.

TABLE A96–1—INTERMEDIATE USEFUL LIFE STANDARDS (G/MI) FOR LIGHT-DUTY VEHICLES

Fuel	THC	NMHC	THCE	NMHCE	CO	NO_X	PM
Gasoline	0.41	0.25	.....	.....	3.4	0.4	0.08
Diesel	0.41	0.25	.....	.....	3.4	1.0	0.08
Methanol	.....	.....	0.41	0.25	3.4	0.4	0.08
Natural Gas	.....	0.25	.....	.....	3.4	0.4	0.08
LPG	0.41	0.25	.....	.....	3.4	0.4	0.08

TABLE A96–2—FULL USEFUL LIFE STANDARDS (G/MI) FOR LIGHT-DUTY VEHICLES

Fuel	THC	NMHC	THCE	NMHCE	CO	NO_X	PM
Gasoline	.....	0.31	.....	.....	4.2	0.6	0.10
Diesel	.....	0.31	.....	.....	4.2	1.25	0.10
Methanol	.....	.....	.....	0.31	4.2	0.6	0.10
Natural Gas	.....	0.31	.....	.....	4.2	0.6	0.10
LPG	.....	0.31	.....	.....	4.2	0.6	0.10

(ii)(A) Vehicles subject to the standards of paragraph (a)(1)(i) of this section shall be all actual U.S. sales of light-duty vehicles of the applicable model year by a manufacturer.

(B) A manufacturer can not use one set of engine families to meet its intermediate useful life standards and another to meet its full useful life standards. The same families which are used

to meet the intermediate useful life standards will be required without deviation to meet the corresponding full useful life standards.

(iii) CST emissions from gasoline-fueled Otto-cycle light-duty vehicles measured and calculated in accordance with subpart O of this part may not exceed the standards listed in paragraphs (a)(1)(iii) (A) and (B) of this section.

(A) Hydrocarbons: 100 ppm as hexane.

(B) Carbon monoxide: 0.5%.

(2) The standards set forth in paragraph (a)(1)(i) of this section refer to the exhaust emitted over a driving schedule as set forth in subpart B of this part and measured and calculated in accordance with those procedures. The test weight basis for light-duty vehicles, for the purposes of determining equivalent test weight as prescribed in § 86.129–94, shall be loaded vehicle weight.

(3) The standards set forth in paragraph (a)(1)(iii) of this section refer to the exhaust emitted during the CST as set forth in subpart O of this part and measured and calculated in accordance with those provisions.

(b) Evaporative emissions from light-duty vehicles shall not exceed the following standards. The standards apply equally to certification and in-use vehicles. The spitback standard also applies to newly assembled vehicles. For certification vehicles only, manufacturers may conduct testing to quantify a level of nonfuel background emissions for an individual test vehicle. Such a demonstration must include a description of the source(s) of emissions and an estimated decay rate. The demonstrated level of nonfuel background emissions may be subtracted from emission test results from certification vehicles if approved in advance by the Administrator.

(1) *Hydrocarbons (for gasoline-fueled, natural gas-fueled and liquefied petroleum gas-fueled vehicles).* (i)(A) For the full three-diurnal test sequence described in § 86.130–96, diurnal plus hot soak measurements: 2.0 grams per test.

(B) For the supplemental two-diurnal test sequence described in § 86.130–96, diurnal plus hot soak emissions (gasoline-fueled vehicles only): 2.5 grams per test.

(ii) *Running loss test (gasoline-fueled vehicles only):* 0.05 grams per mile.

(iii) *Fuel dispensing spitback test (gasoline-fueled vehicles only):* 1.0 grams per test.

(2) *Total Hydrocarbon Equivalent (for methanol-fueled vehicles).* (i)(A) For the full three-diurnal test sequence described in § 86.130–96, diurnal plus hot soak measurements: 2.0 grams carbon per test.

(B) For the supplemental two-diurnal test sequence described in § 86.130–96, diurnal plus hot soak measurements: 2.5 grams carbon per test.

(ii) *Running loss test:* 0.05 grams carbon per mile.

(iii) *Fuel dispensing spitback test:* 1.0 gram carbon per test.

(3) The standards set forth in paragraphs (b) (1) and (2) of this section refer to a composite sample of evaporative emissions collected under the conditions and measured in accordance with the procedures set forth in subpart B of this part.

(4) All fuel vapor generated in a gasoline- or methanol-fueled light-duty vehicle during in-use operations shall be routed exclusively to the evaporative control system (e.g., either canister or engine purge). The only exception to this requirement shall be for emergencies.

(5)(i) A minimum of the percentage shown in table A96–15 of a manufacturer's sales of the applicable model year's gasoline- and methanol-fueled light-duty vehicles shall be tested with the procedures in subpart B indicated for 1996 model year, and shall not exceed the standards described in paragraph (b) of this section. The remaining vehicles shall be tested with the procedures in subpart B of this part for 1995 model year light-duty vehicles and be subject to the standards described in § 86.090–8(b).

TABLE A96–15—IMPLEMENTATION SCHEDULE FOR LIGHT-DUTY VEHICLES FOR EVAPORATIVE EMISSION TESTING

Model year	Sales percentage
1996	20
1997	40
1998	90

TABLE A96–15—IMPLEMENTATION SCHEDULE FOR LIGHT-DUTY VEHICLES FOR EVAPORATIVE EMISSION TESTING—Continued

Model year	Sales percentage
1999 and following	100

(ii) Optionally, a minimum of the percentage shown in table A96–15 of a manufacturer's combined sales of the applicable model year's gasoline- and methanol-fueled light-duty vehicles, light-duty trucks, and heavy-duty vehicles shall not exceed the applicable standards.

(iii) Small volume manufacturers, as defined in § 86.092–14(b)(1) and (2), are exempt from the implementation schedule of table A96–15 of this section for model years 1996, 1997, and 1998. For small volume manufacturers, the standards of § 86.090–8(b), and the associated test procedures, continue to apply until model year 1999, when 100 percent compliance with the standards of this section is required. This exemption does not apply to small volume engine families as defined in § 86.092–14(b)(5).

(iv) For the 1996 model year, manufacturers may satisfy the testing requirements for federal certification to the evaporative standards of paragraph (b) of this section, except the fuel dispensing spitback test, by presenting test results from the certification procedures defined by the California Regulatory Requirements Applicable to the Evaporative Emissions Program (January 4, 1995). These requirements have been incorporated by reference (see § 86.1).

(c) No crankcase emissions shall be discharged into the ambient atmosphere from any 1996 and later model year Otto-cycle, or methanol-or gaseous-fueled diesel light-duty vehicle. This requirement is optional for 1996 model year gaseous-fueled light-duty vehicles.

(d)–(f) [Reserved]

(g) Any 1994 and later model year light-duty vehicle that a manufacturer wishes to certify for sale shall meet the emission standards under both low- and high-altitude conditions as specified in § 86.082–2, except as provided in paragraphs (h) and (i) of this section. Vehicles shall meet emission standards under both low- and high-altitude conditions without manual adjustments or modifications. Any emission control device used to meet emission standards under high-altitude conditions shall initially actuate (automatically) no higher than 4,000 feet above sea level.

(h) The manufacturer may exempt 1994 and later model year vehicles from compliance at high altitude with the emission standards set forth in paragraphs (a) and (b) of this section if the vehicles are not intended for sale at high altitude and if the requirements of paragraphs (h) (1) and (2) of this section are met.

(1) A vehicle configuration shall only be considered eligible for exemption under paragraph (h) of this section if the requirements of either paragraph (h)(1) (i), (ii), (iii), or (iv) of this section are met.

(i) Its design parameters (displacement-to-weight ratio (D/W) and engine speed-to-vehicle-speed ratio (N/V)) fall within the exempted range for that manufacturer for that year. The exempted range is determined according to the following procedure:

(A) The manufacturer shall graphically display the D/W and N/V data of all vehicle configurations it will offer for the model year in question. The axis of the abscissa shall be D/W (where (D) is the engine displacement expressed in cubic centimeters and (W) is the equivalent vehicle test weight expressed in pounds), and the axis of the ordinate shall be N/V (where (N) is the crankshaft speed expressed in revolutions per minute and (V) is the vehicle speed expressed in miles per hour). At the manufacturer's option, either the 1:1 transmission gear ratio or the lowest numerical gear ratio available in the transmission will be used to determine N/V. The gear selection must be the same for all N/V data points on the manufacturer's graph. For each transmission/axle ratio combination, only the lowest N/V value shall be used in the graphical display.

(B) The product line is then defined by the equation, $N/V=C(D/W)^{-0.9}$, where the constant, C, is determined by the requirement that all the vehicle data points either fall on the line or lie to

the upper right of the line as displayed on the graphs.

(C) The exemption line is then defined by the equation, $N/V=C(0.84\ D/W)^{-0.9}$, where the constant, C is the same as that found in paragraph (h)(1)(i)(B) of this section.

(D) The exempted range includes all values of N/V and D/W which simultaneously fall to the lower left of the exemption line as drawn on the graph.

(ii) Its design parameters fall within the alternate exempted range for that manufacturer that year. The alternate exempted range is determined by substituting rated horsepower (hp) for displacement (D) in the exemption procedure described in paragraph (h)(1)(i) of this section and by using the product line $N/V=C(hp/W)^{-0.9}$.

(A) Rated horsepower shall be determined by using the Society of Automotive Engineers Test Procedure J 1349, June 1990, Engine Power Test Code—Spark Ignition and Compression Ignition—Net Power Rating. This incorporation by reference was approved by the Director of the FEDERAL REGISTER in accordance with 5 U.S.C. 552(a) and 1 CFR part 51. Copies may be obtained from SAE International, 400 Commonwealth Drive, Warrendale, PA, 15096–0001. Copies may be inspected at U.S. EPA, OAR, 401 M Street, SW., Washington, DC, 20460, or at the Office of the Federal Register, 800 North Capitol Street, NW., suite 700, Washington, DC. Any of the horsepower determinants within that test procedure may be used, as long as it is used consistently throughout the manufacturer's product line in any model year.

(B) No exemptions will be allowed under paragraph (h)(1)(ii) of this section to any manufacturer that has exempted vehicle configurations as set forth in paragraph (h)(1)(i) of this section.

(iii) Its acceleration time (the time it takes a vehicle to accelerate from 0 miles per hour to a speed not less than 40 miles per hour and not greater than 50 miles per hour) under high-altitude conditions is greater than the largest acceleration time under low-altitude conditions for that manufacturer for that year. The procedure to be followed in making this determination is:

(A) The manufacturer shall list the vehicle configuration and acceleration time under low-altitude conditions of that vehicle configuration which has the highest acceleration time under low-altitude conditions of all the vehicle configurations it will offer for the model year in question. The manufacturer shall also submit a description of the methodology used to make this determination.

(B) The manufacturer shall then list the vehicle configurations and acceleration times under high-altitude conditions of all those vehicle configurations which have higher acceleration times under high-altitude conditions than the highest acceleration time at low altitude identified in paragraph (h)(1)(iii)(A) of this section.

(iv) In lieu of performing the test procedure of paragraphs (h)(1)(iii) (A) and (B) of this section, its acceleration time can be estimated based on the manufacturer's engineering evaluation, in accordance with good engineering practice, to meet the exemption criteria of paragraph (h)(1)(iii) of this section.

(2) A vehicle shall only be considered eligible for exemption under this paragraph if at least one configuration of its model type (and transmission configuration in the case of vehicles equipped with manual transmissions, excluding differences due to the presence of overdrive) is certified to meet emission standards under high-altitude conditions as specified in paragraphs (a) through (c) and paragraph (g) of this section. The Certificate of Conformity (the Certificate) covering any exempted configuration(s) will also apply to the corresponding non-exempt configuration(s) required under this paragraph (h)(2). As a condition to the exemption, any suspension, revocation, voiding, or withdrawal of the Certificate as it applies to a non-exempt configuration for any reason will result in a suspension of the Certificate as it applies to the corresponding exempted configuration(s) of that model type, unless there is at least one other corresponding non-exempt configuration of the same model type still covered by the Certificate. The suspension of the

Certificate as it applies to the exempted configuration(s) will be terminated when any one of the following occurs:

(i) Another corresponding non-exempt configuration(s) receive(s) coverage under the Certificate; or

(ii) Suspension of the Certificate as it applies to the corresponding non-exempt configuration(s) is terminated; or

(iii) The Agency's action(s), with respect to suspension, revocation, voiding, or withdrawal of the Certificate as it applies to the corresponding non-exempt configuration(s), is reversed.

(3) The sale of a vehicle for principal use at a designated high-altitude location that has been exempted as set forth in paragraph (h) of this section will be considered a violation of section 203(a)(1) of the Clean Air Act.

(i)(1) The manufacturers may exempt 1996 and later model year vehicles from compliance at low altitude with the emission standards set forth in paragraph (a) of this section and § 86.090–8(b) if the vehicles:

(i) Are not intended for sale at low altitude; and

(ii) Are equipped with a unique, high-altitude axle ratio (rear-wheel drive vehicles) or a unique, high-altitude drivetrain (front-wheel drive vehicles) with a higher N/V ratio than other configurations of that model type which are certified in compliance with the emission standards of paragraph (a) of this section and § 86.090–8(b) under low-altitude conditions.

(2) The sale of a vehicle for principal use at low altitude that has been exempted as set forth in paragraph (i)(1) of this section will be considered a violation of section 203(a)(1) of the Clean Air Act.

(j) Any exempted light-duty vehicle that a manufacturer wishes to certify for sale under the provisions of § 86.090–8 (h) or paragraph (i) of this section is subject to the provisions of subpart Q of this part.

(k) *Cold Temperature Carbon Monoxide (CO) Standards—Light-Duty Vehicles.* Exhaust emissions from 1996 and later model year gasoline-fueled light-duty vehicles shall not exceed the cold temperature CO standard of 10.0 grams per mile for an intermediate useful life of 50,000 miles, as measured and calculated under the provisions set forth in subpart C of this part. This standard applies under both low and high altitude conditions.

[56 FR 25756, June 5, 1991, as amended at 57 FR 31915, July 17, 1992; 58 FR 16021, Mar. 24, 1993; 58 FR 34536, June 28, 1993; 58 FR 58417, Nov. 1, 1993; 59 FR 48499, Sept. 21, 1994; 60 FR 43887, Aug. 23, 1995; 62 FR 47120, Sept. 5, 1997]

§ 86.096–9 Emission standards for 1996 and later model year light-duty trucks.

Section 86.096–9 includes text that specifies requirements that differ from § 86.094–9. Where a paragraph in § 86.094–9 is identical and applicable to § 86.096–9, this may be indicated by specifying the corresponding paragraph and the statement ''[Reserved]. For guidance see § 86.094–9.''

(a)(1) introductory text through (a)(1)(iv) [Reserved]. For guidance see § 86.094–9.

(v) CST emissions from gasoline-fueled Otto-cycle light-duty trucks measured and calculated in accordance with subpart O of this part may not exceed the standards listed in paragraphs (a)(1)(v) (A) and (B) of this section.

(A) Hydrocarbons: 100 ppm as hexane.

(B) Carbon monoxide: 0.5%.

(a)(2) [Reserved]

(3) The standards set forth in paragraph (a)(1)(v) of this section refer to the exhaust emitted during the CST as set forth in subpart O of this part and measured and calculated in accordance with those provisions.

(b) Evaporative emissions from light-duty trucks shall not exceed the following standards. The standards apply equally to certification and in-use vehicles. The spitback standard also applies to newly assembled vehicles. For certification vehicles only, manufacturers may conduct testing to quantify a level of nonfuel background emissions for an individual test vehicle. Such a demonstration must include a description of the source(s) of emissions and an estimated decay rate. The demonstrated level of nonfuel background emissions may be subtracted from emission test results from certification vehicles if approved in advance by the Administrator.

(1) *Hydrocarbons (for gasoline-fueled, natural gas-fueled and liquefied petroleum gas-fueled vehicles).* (i)(A) For gasoline-fueled heavy light-duty trucks with a nominal fuel tank capacity of at least 30 gallons:

(*1*) For the full three-diurnal test sequence described in § 86.130–96, diurnal plus hot soak measurements: 2.5 grams per test.

(*2*) For the supplemental two-diurnal test sequence described in § 86.130–96, diurnal plus hot soak measurements: 3.0 grams per test.

(B) For all other light-duty trucks:

(*1*) For the full three-diurnal test sequence described in § 86.130–96, diurnal plus hot soak measurements: 2.0 grams per test.

(*2*) For the supplemental two-diurnal test sequence described in § 86.130–96, diurnal plus hot soak measurements (gasoline-fueled vehicles only): 2.5 grams per test.

(ii) *Running loss test (gasoline-fueled vehicles only):* 0.05 grams per mile.

(iii) *Fuel dispensing spitback test (gasoline-fueled vehicles only):* 1.0 grams per test.

(2) *Total Hydrocarbon Equivalent (for methanol-fueled vehicles).* (i)(A) For heavy light-duty trucks with nominal fuel tank capacity of at least 30 gallons:

(*1*) For the full three-diurnal test sequence described in § 86.130–96, diurnal plus hot soak measurements: 2.5 grams carbon per test.

(*2*) For the supplemental two-diurnal test sequence described in § 86.130–96, diurnal plus hot soak measurements: 3.0 grams carbon per test.

(B) For all other light-duty trucks:

(*1*) For the full three-diurnal test sequence described in § 86.130–96, diurnal plus hot soak measurements: 2.0 grams carbon per test.

(*2*) For the supplemental two-diurnal test sequence described in § 86.130–96, diurnal plus hot soak measurements: 2.5 grams carbon per test.

(ii) *Running loss test:* 0.05 grams carbon per mile.

(iii) *Fuel dispensing spitback test:* 1.0 gram carbon per test.

(3) The standards set forth in paragraphs (b) (1) and (2) of this section refer to a composite sample of evaporative emissions collected under the conditions and measured in accordance with the procedures set forth in subpart B of this part.

(4) All fuel vapor generated in a gasoline- or methanol-fueled light-duty truck during in-use operations shall be routed exclusively to the evaporative control system (e.g., either canister or engine purge). The only exception to this requirement shall be for emergencies.

(5)(i) A minimum of the percentage shown in table A96–16 of a manufacturer's sales of the applicable model year's gasoline- and methanol-fueled light-duty trucks shall be tested with the procedures in subpart B of this part indicated for the 1996 model year, and shall not exceed the standards described in paragraph (b) of this section. The remaining vehicles shall be tested with the procedures in subpart B of this part for 1995 model year light-duty trucks and be subject to the standards described in § 86.090–9(b).

TABLE A96–16—IMPLEMENTATION SCHEDULE FOR LIGHT-DUTY TRUCKS FOR EVAPORATIVE EMISSION TESTING

Model year	Sales percentage
1996	20
1997	40
1998	90
1999 and following	100

(ii) Optionally, a minimum of the percentage shown in table A96–16 of a manufacturer's combined sales of the applicable model year's gasoline- and methanol-fueled light-duty vehicles, light-duty trucks, and heavy-duty vehicles shall not exceed the applicable standards.

(iii) Small volume manufacturers, as defined in § 86.092–14(b)(1) and (2), are exempt from the implementation schedule of table A96–16 of this section for model years 1996, 1997, and 1998. For small volume manufacturers, the standards of § 86.090–9(b), and the associated test procedures, continue to apply until model year 1999, when 100 percent compliance with the standards of this section is required. This exemption does not apply to small volume engine families as defined in § 86.092–14(b)(5).

(iv) For the 1996 model year, manufacturers may satisfy the testing requirements for federal certification to the evaporative standards of paragraph (b) of this section, except the fuel dispensing spitback test, by presenting test results from the certification procedures defined by the California Regulatory Requirements Applicable to the Evaporative Emissions Program (January 4, 1995). These requirements have been incorporated by reference (see § 86.1).

(c) [Reserved]. For guidance see § 86.094–9.

(d) through (f) [Reserved].

(g) through (k) [Reserved]. For guidance see § 86.094–9.

[58 FR 16021, Mar. 24, 1993, as amended at 58 FR 58417, Nov. 1, 1993; 59 FR 48500, Sept. 21, 1994; 60 FR 43887, Aug. 23, 1995]

§ 86.096–10 Emission standards for 1996 and later model year Otto-cycle heavy-duty engines and vehicles.

Section 86.096–10 includes text that specifies requirements that differ from § 86.091–10. Where a paragraph in § 86.091–10 is identical and applicable to § 86.096–10, this may be indicated by specifying the corresponding paragraph and the statement ''[Reserved]. For guidance see § 86.091–10.''

(a) [Reserved]. For guidance see § 86.091–10.

(b) Evaporative emissions from heavy-duty vehicles shall not exceed the following standards. The standards apply equally to certification and in-use vehicles. The spitback standard also applies to newly assembled vehicles. For certification vehicles only, manufacturers may conduct testing to quantify a level of nonfuel background emissions for an individual test vehicle. Such a demonstration must include a description of the source(s) of emissions and an estimated decay rate. The demonstrated level of nonfuel background emissions may be subtracted from emission test results from certification vehicles if approved in advance by the Administrator.

(1) *Hydrocarbons (for vehicles equipped with gasoline-fueled, natural gas-fueled or liquefied petroleum gas-fueled engines).* (i) For vehicles with a Gross Vehicle Weight Rating of up to 14,000 lbs:

(A)(*1*) For the full three-diurnal test sequence described in § 86.1230–96, diurnal plus hot soak measurements: 3.0 grams per test.

(*2*) For the supplemental two-diurnal test sequence described in § 86.1230–96, diurnal plus hot soak measurements (gasoline-fueled vehicles only): 3.5 grams per test.

(B) Running loss test (gasoline-fueled vehicles only): 0.05 grams per mile.

(C) Fuel dispensing spitback test (gasoline-fueled vehicles only): 1.0 gram per test.

(ii) For vehicles with a Gross Vehicle Weight Rating of greater than 14,000 lbs:

(A)(*1*) For the full three-diurnal test sequence described in § 86.1230–96, diurnal plus hot soak measurements: 4.0 grams per test.

(*2*) For the supplemental two-diurnal test sequence described in § 86.1230–96, diurnal plus hot soak measurements (gasoline-fueled vehicles only): 4.5 grams per test.

(B) Running loss test (gasoline-fueled vehicles only): 0.05 grams per mile.

(2) Total Hydrocarbon Equivalent (for vehicles equipped with methanol-fueled engines). (i) For vehicles with a Gross Vehicle Weight Rating of up to 14,000 lbs:

(A)(*1*) For the full three-diurnal test sequence described in § 86.1230–96, diurnal plus hot soak measurements: 3.0 grams carbon per test.

(*2*) For the supplemental two-diurnal test sequence described in § 86.1230–96, diurnal plus hot soak measurements: 3.5 grams carbon per test.

(B) Running loss test: 0.05 grams carbon per mile.

(C) Fuel dispensing spitback test: 1.0 gram carbon per test.

(ii) For vehicles with a Gross Vehicle Weight Rating of greater than 14,000 lbs:

(A)(*1*) For the full three-diurnal test sequence described in § 86.1230–96, diurnal plus hot soak measurements: 4.0 grams carbon per test.

(*2*) For the supplemental two-diurnal test sequence described in § 86.1230–96, diurnal plus hot soak measurements: 4.5 grams carbon per test.

(B) Running loss test: 0.05 grams carbon per mile.

(3)(i) For vehicles with a Gross Vehicle Weight Rating of up to 26,000 lbs, the standards set forth in paragraphs (b)(1) and (b)(2) of this section refer to a composite sample of evaporative emissions collected under the conditions and measured in accordance with the procedures set forth in subpart M of this part.

(ii) For vehicles with a Gross Vehicle Weight Rating of greater than 26,000 lbs., the standards set forth in paragraphs (b)(1)(ii) and (b)(2)(ii) of this section refer to the manufacturer's engineering design evaluation using good engineering practice (a statement of which is required in §86.091–23(b)(4)(ii)).

(4) All fuel vapor generated in a gasoline- or methanol-fueled heavyduty vehicle during in-use operations shall be routed exclusively to the evaporative control system (e.g., either canister or engine purge). The only exception to this requirement shall be for emergencies.

(5)(i) A minimum of the percentage shown in table A96–17 of a manufacturer's sales of the applicable model year's gasoline- and methanol-fueled heavy-duty vehicles shall not exceed the standards described in paragraph (b) of this section, except that methanol-fueled heavy-duty vehicles are exempt for the 1996 and 1997 model years. The remaining vehicles shall be subject to the standards described in §86.091–10(b).

TABLE A96–17—IMPLEMENTATION SCHEDULE FOR HEAVY-DUTY VEHICLES FOR EVAPORATIVE EMISSION TESTING

Model year	Sales percentage
1996	20
1997	40
1998	90
1999 and following	100

(ii) Optionally, a minimum of the percentage shown in table A96–17 of a manufacturer's combined sales of the applicable model year's gasoline- and methanol-fueled light-duty vehicles, light-duty trucks, and heavy-duty vehicles shall not exceed the applicable standards.

(iii) Small volume manufacturers, as defined in §86.092–14(b)(1) and (2), are exempt from the implementation schedule of table A96–17 of this section for model years 1996, 1997, and 1998. For small volume manufacturers, the standards of §86.091–10(b), and the associated test procedures, continue to apply until model year 1999, when 100 percent compliance with the standards of this section is required. This exemption does not apply to small volume engine families as defined in §86.092–14(b)(5).

(iv) For the 1996 model year, manufacturers may satisfy the testing requirements for federal certification to the evaporative standards of paragraph (b) of this section, except the fuel dispensing spitback test, by presenting test results from the certification procedures defined by the California Regulatory Requirements Applicable to the Evaporative Emissions Program (January 4, 1995). These requirements have been incorporated by reference (see §86.1).

(c)–(d) [Reserved]. For guidance see §86.091–10.

[58 FR 16022, Mar. 24, 1993, as amended at 59 FR 48500, Sept. 21, 1994; 60 FR 43887, Aug. 23, 1995]

§86.096–11 Emission standards for 1996 and later model year diesel heavy-duty engines and vehicles.

(a) Exhaust emissions from new 1996 and later model year diesel heavy-duty engines shall not exceed the following (optional for 1996 model year gaseous-fueled diesel heavy-duty engines):

(1)(i) *Hydrocarbons (for diesel engines fueled with either petroleum-fuel or liquefied petroleum gas).* 1.3 grams per brake horsepower-hour (0.48 gram per megajoule), as measured under transient operating conditions.

(ii) *Total Hydrocarbon Equivalent (for methanol-fueled diesel engines).* 1.3 grams per brake horsepower-hour (0.48 gram per megajoule), as measured under transient operating conditions.

(iii) *Nonmethane hydrocarbons (for natural gas-fueled diesel engines).* 1.2 grams per brake horsepower-hour (0.45 gram per megajoule), as measured under transient operating conditions.

(2) *Carbon monoxide.* (i) 15.5 grams per brake horsepower-hour (5.77 grams per megajoule), as measured under transient operating conditions.

(ii) 0.50 percent of exhaust gas flow at curb idle (methanol-, natural gas-, and liquefied petroleum gas-fueled diesel only).

(3) *Oxides of Nitrogen.* (i) 5.0 grams per brake horsepower-hour (1.9 grams per megajoule), as measured under transient operating conditions.

(ii) A manufacturer may elect to include any or all of its diesel heavy-duty engine families in any or all of the NO_X averaging, trading, or banking programs for heavy-duty engines, within the restrictions described in § 86.094–15. If the manufacturer elects to include engine families in any of these programs, the NO_X FELs may not exceed 6.0 grams per brake horsepower-hour (2.2 grams per megajoule). This ceiling value applies whether credits for the family are derived from averaging, trading or banking programs.

(4) *Particulate.* (i) For diesel engines to be used in urban buses, 0.05 gram per brake horsepower-hour (0.019 gram per megajoule) for certification testing and selective enforcement audit testing, and 0.07 gram per brake horsepower-hour (0.026 gram per megajoule) for in-use testing, as measured under transient operating conditions.

(ii) For all other diesel engines only, 0.10 gram per brake horsepower-hour (0.037 gram per megajoule), as measured under transient operating conditions.

(iii) A manufacturer may elect to include any or all of its diesel heavy-duty engine families in any or all of the particulate averaging, trading, or banking programs for heavy-duty engines, within the restrictions described in § 86.094–15. If the manufacturer elects to include engine families in any of these programs, the particulate FEL may not exceed:

(A) For engine families intended for use in urban buses, 0.25 gram per brake horsepower-hour (0.093 gram per megajoule).

(B) For engine families not intended for use in urban buses, 0.60 gram per brake horsepower-hour (0.22 gram per megajoule).

(C) The ceiling values in paragraphs (a)(4)(iii) (A) and (B) of this section apply whether credits for the family are derived from averaging, trading or banking programs.

(b)(1) The opacity of smoke emission from new 1996 and later model year diesel heavy-duty engine shall not exceed:

(i) 20 percent during the engine acceleration mode.

(ii) 15 percent during the engine lugging mode.

(iii) 50 percent during the peaks in either mode.

(2) The standards set forth in paragraph (b)(1) of this section refer to exhaust smoke emissions generated under the conditions set forth in subpart I of this part and measured and calculated in accordance with these procedures.

(3) *Evaporative emissions* (total of non-oxygenated hydrocarbons plus methanol) from 1996 and later model year heavy-duty vehicles equipped with methanol-fueled diesel engines shall not exceed:

(i) For vehicles with a Gross Vehicle Weight Rating of up to 14,000 lbs, 3.0 grams per test.

(ii) For vehicles with a Gross Vehicle Weight Rating of greater than 14,000 lbs, 4.0 grams per test.

(4) *Evaporative emissions* from 1996 and later model year heavy-duty vehicles equipped with natural gas-fueled or liquefied petroleum gas-fueled heavy-duty engines shall not exceed the following standards. The standards apply equally to certification and in-use vehicles.

(i) For vehicles with a Gross Vehicle Weight Rating of up to 14,000 pounds for the full three-diurnal test sequence described in § 86.1230–96, diurnal plus hot soak measurements: 3.0 grams per test.

(ii) For vehicles with a Gross Vehicle Weight Rating of greater than 14,000 pounds for the full three-diurnal test sequence described in § 86.1230–96, diurnal plus hot soak measurements: 4.0 grams per test.

(5)(i) For vehicles with a Gross Vehicle Weight Rating of up to 26,000 lbs, the standards set forth in paragraphs (b)(3) and (b)(4) of this section refer to a composite sample of evaporative emissions collected under the conditions and measured in accordance with the procedures set forth in subpart M of this part. For certification vehicles only, manufacturers may conduct testing to quantify a level of nonfuel background emissions for an individual test

vehicle. Such a demonstration must include a description of the source(s) of emissions and an estimated decay rate. The demonstrated level of nonfuel background emissions may be subtracted from emission test results from certification vehicles if approved in advance by the Administrator.

(ii) For vehicles with a Gross Vehicle Weight Rating greater than 26,000 pounds, the standards set forth in paragraphs (b)(3)(ii) and (b)(4)(ii) of this section refer to the manufacturer's engineering design evaluation using good engineering practice (a statement of which is required in §86.091–23(b)(4)(ii)).

(c) No crankcase emissions shall be discharged into the ambient atmosphere from any new 1996 or later model year methanol-or gaseous-fueled diesel, or any naturally aspirated diesel heavy-duty engine. For petroleum-fueled engines only, this provision does not apply to engines using turbochargers, pumps, blowers, or superchargers for air induction. This provision is optional for all 1996 model year gaseous-fueled diesel heavy-duty engines, and for 1997 model year gaseous-fueled diesel heavy-duty engines using turbochargers, pumps, blowers or superchargers for air induction.

(d) Every manufacturer of new motor vehicle engines subject to the standards prescribed in this section shall, prior to taking any of the actions specified in section 203(a)(1) of the Act, test or cause to be tested motor vehicle engines in accordance with applicable procedures in subpart I or N of this part to ascertain that such test engines meet the requirements of paragraphs (a), (b), (c), and (d) of this section.

[58 FR 15799, Mar. 24, 1993, as amended at 59 FR 48500, Sept. 21, 1994; 60 FR 43887, Aug. 23, 1995; 62 FR 47120, Sept. 5, 1997]

§86.096–14 Small-volume manufacturer certification procedures.

Section 86.096–14 includes text that specifies requirements that differ from those specified in §§86.094–14 and 86.095–14. Where a paragraph in §86.094–14 or §86.095–14 is identical and applicable to §86.096–14, this may be indicated by specifying the corresponding paragraph and the statement ''[Reserved]. For guidance see §86.094–14'' or ''[Reserved]. For guidance see §86.095–14.'' Where a corresponding paragraph of §86.094–14 or §86.095–14 is not applicable, this is indicated by the statement ''[Reserved].''

(a) through (c)(11)(ii)(B)(*15*) [Reserved]. For guidance see §86.094–14.

(c)(11)(ii)(B)(*16*) through (c)(11)(ii)(B)(*18*) [Reserved]. For guidance see §86.095–14.

(c)(11)(ii)(B)(*19*) For each light-duty vehicle, light-duty truck, or heavy-duty vehicle evaporative emission family, a description of any unique procedures required to perform evaporative emission tests (including canister working capacity, canister bed volume, and fuel temperature profile for the running loss test) for all vehicles in that evaporative emission family, and a description of the method used to develop those unique procedures.

(*20*) For each light-duty vehicle, light-duty truck, or heavy-duty vehicle evaporative emission family:

(*i*) Canister working capacity, according to the procedures specified in §86.132–96(h)(1)(iv);

(*ii*) Canister bed volume; and

(*iii*) Fuel temperature profile for the running loss test, according to the procedures specified in §86.129–94(d).

(c)(11)(ii)(C) through (c)(11)(ii)(D)(*5*) [Reserved]. For guidance see §86.095–14.

(c)(11)(ii)(D)(*6*) [Reserved]

(c)(11)(ii)(D)(*7*) through (c)(15) [Reserved]. For guidance see §86.094–14.

[58 FR 16023, Mar. 24, 1993]

§86.096–21 Application for certification.

Section 86.096–21 includes text that specifies requirements that differ from §86.094–21. Where a paragraph in §86.094–21 is identical and applicable to §86.096–21, this may be indicated by specifying the corresponding paragraph and the statement ''[Reserved]. For guidance see §86.094–21.''

(a)–(b)(8) [Reserved]. For guidance see §86.094–21.

(b)(9) For each light-duty vehicle, light-duty truck, or heavy-duty vehicle evaporative emission family, a description of any unique procedures required to perform evaporative emission tests (including canister working capacity, canister bed volume, and fuel temperature profile for the running loss test) for all vehicles in that evaporative

emission family, and a description of the method used to develop those unique procedures.

(10) For each light-duty vehicle, light-duty truck, or heavy-duty vehicle evaporative emission family:

(i) Canister working capacity, according to the procedures specified in § 86.132–96(h)(1)(iv);

(ii) Canister bed volume; and

(iii) Fuel temperature profile for the running loss test, according to the procedures specified in § 86.129–94(d).

(c) through (j) [Reserved]. For guidance see § 86.094–21.

(k) For light-duty vehicles and light-duty trucks, a manufacturer with an engine family that cannot be appropriately tested on all Certification Short Test emission test procedures described in § 86.1439 of this part may request an exemption, as described in § 86.1427 (d), from the inappropriate test(s) for purposes of demonstrating compliance with the Certification Short Test as described in subpart O of this part.

(l) For light-duty vehicles and light-duty trucks, a manufacturer with an engine family that can be appropriately tested on none of the Certification Short Test emission test procedures described in § 86.1439 of this part may request an alternative procedure as described in § 86.1427 (d).

[58 FR 16023, Mar. 24, 1993, as amended at 58 FR 34536, June 28, 1993; 58 FR 58417, Nov. 1, 1993; 59 FR 33913, July 1, 1994; 60 FR 34335, June 30, 1995]

§ 86.096–23 Required data.

Section 86.096–23 includes text that specifies requirements that differ from those specified in § 86.095–23. Where a paragraph in § 86.095–23 is identical and applicable to § 86.096–23, this may be indicated by specifying the corresponding paragraph and the statement ''[Reserved]''. For guidance see § 86.095–23.

(a) through (l) [Reserved]. For guidance see § 86.095–23.

(m) Additionally, except for small-volume manufacturers, manufacturers certifying vehicles shall submit for each model year 1996 through 1998 light-duty vehicle, light-duty truck, and gasoline-fueled heavy-duty vehicle evaporative family:

(1) In the application for certification the projected sales volume of evaporative families certifying to the respective evaporative test procedure and accompanying standards as set forth or otherwise referenced in §§ 86.090–8, 86.090–9, and 86.091–10 or those set forth or otherwise referenced in §§ 86.096–8, 86.096–9, and 86.096–10. Volume projected to be produced for U.S. sale may be used in lieu of projected U.S. sales.

(2) End-of-year reports for each evaporative family.

(i) These end-of-year reports shall be submitted within 90 days of the end of the model year to: Director, Manufacturers Operations Division (6405J), U.S. Environmental Protection Agency, 401 M Street, SW, Washington, DC 20460.

(ii) These reports shall indicate the model year, evaporative family and the actual U.S. sales volume. The manufacturer may petition the Administrator to allow volume produced for U.S. sale to be used in lieu of U.S. sales. Such petition shall be submitted within 30 days of the end of the model year to the Manufacturers Operations Division. For the petition to be granted, the manufacturer must establish to the satisfaction of the Administrator that production volume is functionally equivalent to sales volume.

(iii) The U.S. sales volume for end-of-year reports shall be based on the location of the point of sale to a dealer, distributor, fleet operator, broker, or any other entity that comprises the point of first sale.

(iv) Failure by a manufacturer to submit the end-of-year report within the specified time may result in certificate(s) for the evaporative family(ies) certified to the certification standards set forth in §§ 86.090–8, 86.090–9, and 86.091–10 being voided ab initio plus any applicable civil penalties for failure to submit the required information to the Agency.

(v) The information shall be organized in such a way as to allow the Administrator to determine compliance with the Evaporative Emission Testing implementation schedules of §§ 86.096–8, 86.096–9, and 86.096–10.

[58 FR 16023, Mar. 24, 1993, as amended at 58 FR 66297, Dec. 20, 1993]

§86.096–24 Test vehicles and engines.

(a) *General.* This paragraph applies to the grouping of vehicles or engines into families.

(1) The vehicles or engines covered by an application for certification will be divided into groupings of engines which are expected to have similar emission characteristics throughout their useful life. Each group of engines with similar emission characteristics is defined as a separate engine family.

(2) To be classed in the same engine family, engines must be identical in all the respects listed in paragraphs (a)(2)(i) through (x) of this section.

(i) The cylinder bore center-to-center dimensions.

(ii) through (iii) [Reserved]

(iv) The cylinder block configuration (air-cooled or water-cooled: L–6, 90 deg., V–8, and so forth).

(v) The location of the intake and exhaust valves (or ports).

(vi) The method of air aspiration.

(vii) The combustion cycle.

(viii) Catalytic converter characteristics.

(ix) Thermal reactor characteristics.

(x) Type of air inlet cooler (for example, intercoolers and after-coolers) for diesel heavy-duty engines.

(3)(i) Engines identical in all the respects listed in paragraph (a)(2) of this section may be further divided into different engine families if the Administrator determines that they may be expected to have different emission characteristics. This determination will be based upon a consideration of the features of each engine listed in paragraphs (a)(3)(i) (A) through (G) of this section.

(A) The bore and stroke.

(B) The surface-to-volume ratio of the nominally dimensioned cylinder at the top dead center positions.

(C) The intake manifold induction port sizes and configuration.

(D) The exhaust manifold port size and configuration.

(E) The intake and exhaust valve sizes.

(F) The fuel system.

(G) The camshaft timing and ignition or injection timing characteristics.

(ii) Light-duty trucks and heavy-duty engines produced in different model years and distinguishable in the respects listed in paragraph (a)(2) of this section are treated as belonging to a single engine family if the Administrator requires it, after determining that the engines may be expected to have similar emission deterioration characteristics.

(4) Where engines are of a type which cannot be divided into engine families based upon the criteria listed in paragraphs (a)(2) and (3) of this section, the Administrator establishes families for those engines based upon those features most related to their emission characteristics. Engines that are eligible to be included in the same engine family based on the criteria in paragraphs (a)(2) and (a)(3)(i) of this section may be further divided into different engine families if the manufacturer determines that they may be expected to have different emission characteristics. This determination will be based upon a consideration of the features of each engine listed in paragraphs (a)(4) (i) through (iii) of this section.

(i) The dimension from the center line of the crankshaft to the center line of the camshaft.

(ii) The dimension from the center line of the crankshaft to the top of the cylinder block head face.

(iii) The size of the intake and exhaust valves (or ports).

(5) The gasoline-fueled and methanol-fueled light-duty vehicles and light-duty trucks covered by an application for certification will be divided into groupings which are expected to have similar evaporative emission characteristics throughout their useful life. Each group of vehicles with similar evaporative emission characteristics must be defined as a separate evaporative emission family.

(6) For gasoline-fueled or methanol-fueled light-duty vehicles and light-duty trucks to be classed in the same evaporative emission family, vehicles must be similar with respect to the items listed in paragraphs (a)(6) (i) through (iii) of this section.

(i) Type of vapor storage device (for example, canister, air cleaner, crankcase).

(ii) Basic canister design.

(iii) Fuel system.

(7) Where vehicles are of a type which cannot be divided into evaporative

emission families based on the criteria listed in paragraph (a)(2) of this section, the Administrator establishes families for those vehicles based upon the features most related to their evaporative emission characteristics.

(8)(i) If the manufacturer elects to participate in the Production AMA Durability Program, the engine families covered by an application for certification must be grouped based upon similar engine design and emission control system characteristics. Each of these groups constitute a separate engine family group.

(ii) To be classed in the same engine family group, engine families must contain engines identical in all of the respects listed in paragraphs (a)(8)(ii)(A) through (D) of this section.

(A) The combustion cycle.

(B) The cylinder block configuration (air-cooled or water-cooled: L–6, V–8, rotary, etc.).

(C) Displacement (engines of different displacement within 50 cubic inches or 15 percent of the largest displacement and contained within a multidisplacement engine family will be included in the same engine family group).

(D) Catalytic converter usage and basic type (non-catalyst, oxidation catalyst only, three-way catalyst equipped).

(9) Engine families identical in all respects listed in paragraph (a)(8) of this section may be further divided into different engine family groups if the Administrator determines that they are expected to have significantly different exhaust emission control system deterioration characteristics.

(10) A manufacturer may request the Administrator to include in an engine family group engine families in addition to those grouped under the provisions of paragraph (a)(8) of this section. This request must be accompanied by information the manufacturer believes supports the inclusion of these additional engine families.

(11) A manufacturer may combine into a single engine family group those light-duty vehicle and light-duty truck engine families which otherwise meet the requirements of paragraphs (a) (8) through (10) of this section.

(12) Those vehicles covered by an application for certification which are equipped with gasoline-fueled or methanol-fueled heavy-duty engines will be divided into groupings of vehicles on the basis of physical features which are expected to affect evaporative emissions. Each group of vehicles with similar features must be defined as a separate evaporative emission family.

(13) For gasoline-fueled or methanol-fueled heavy-duty vehicles to be classified in the same evaporative emission family, vehicles must be identical with respect to the items listed in paragraphs (a)(13) (i) and (ii) of this section.

(i) Method of fuel/air metering (that is, carburetion versus fuel injection).

(ii) Carburetor bowl fuel volume, within a 10 cc range.

(14) For vehicles equipped with gasoline-fueled or methanol-fueled heavy-duty engines to be classified in the same evaporative emission control system, vehicles must be identical with respect to the items listed in paragraphs (a)(14) (i) through (ix) of this section.

(i) Method of vapor storage.

(ii) Method of carburetor sealing.

(iii) Method of air cleaner sealing.

(iv) Vapor storage working capacity, within a 20g range.

(v) Number of storage devices.

(vi) Method of purging stored vapors.

(vii) Method of venting the carburetor during both engine off and engine operation.

(viii) Liquid fuel hose material.

(ix) Vapor storage material.

(15) Where vehicles equipped with gasoline-fueled or methanol-fueled heavy-duty engines are types which cannot be divided into evaporative emission family-control system combinations based on the criteria listed above, the Administrator establishes evaporative emission family-control system combinations for those vehicles based on features most related to their evaporative emission characteristics.

(b) *Emission data*—(1) *Light-duty vehicles and light-duty trucks.* This paragraph applies to light-duty vehicle and light-duty truck emission data vehicles.

(i) Vehicles are chosen to be operated and tested for emission data based upon engine family groupings. Within

each engine family, one test vehicle is selected. The Administrator selects as the test vehicle the vehicle with the heaviest equivalent test weight (including options) within the family. If more than one vehicle meets this criterion, then within that vehicle grouping, the Administrator selects, in the order listed, the highest road-load power, largest displacement, the transmission with the highest numerical final gear ratio (including overdrive), the highest numerical axle ratio offered in that engine family, and the maximum fuel flow calibration.

(ii) The Administrator selects one additional test vehicle from within each engine family. The additional vehicle selected is the vehicle expected to exhibit the highest emissions of those vehicles remaining in the engine family. If all vehicles within the engine family are similar, the Administrator may waive the requirements of this paragraph.

(iii) Within an engine family and exhaust emission control system, the manufacturer may alter any emission data vehicle (or other vehicles such as current or previous model year emission data vehicles, fuel economy data vehicles, and development vehicles provided they meet emission data vehicles' protocol) to represent more than one selection under paragraph (b)(1) (i), (ii), (iv), or (vii) of this section.

(iv) If the vehicles selected in accordance with paragraphs (b)(1) (i) and (ii) of this section do not represent each engine-system combination, then one vehicle of each engine-system combination not represented will be selected by the Administrator. The vehicle selected is the vehicle expected to exhibit the highest emissions of those vehicles remaining in the engine family.

(v) For high-altitude exhaust emission compliance for each engine family, the manufacturer must follow one of the procedures described in paragraphs (b)(1)(v) (A) and (B) of this section.

(A) The manufacturer must select for testing under high-altitude conditions the vehicle expected to exhibit the highest emissions from the nonexempt vehicles selected in accordance with §86.096–24(b)(1) (ii), (iii), and (iv); or

(B) In lieu of testing vehicles according to paragraph (b)(1)(v)(A) of this section, a manufacturer may provide a statement in its application for certification that, based on the manufacturer's engineering evaluation of such high-altitude emission testing as the manufacturer deems appropriate, all light-duty vehicles and light-duty trucks not exempt under §86.090–8(h) or §86.094–9(h) comply with the emission standards at high altitude.

(vi) If 90 percent or more of the engine family sales will be in California, a manufacturer may substitute emission data vehicles selected by the California Air Resources Board criteria for the selections specified in §86.096–24(b)(1) (i), (ii), and (iv).

(vii)(A) Vehicles of each evaporative emission family are divided into evaporative emission control systems.

(B) The Administrator selects the vehicle expected to exhibit the highest evaporative emissions from within each evaporative family to be certified. This vehicle is selected from among the vehicles represented by the exhaust emission data selections for the engine family, unless evaporative testing has already been completed on the vehicle expected to exhibit the highest evaporative emissions for the evaporative family as part of another engine family's testing.

(C) If the vehicles selected in accordance with paragraph (b)(1)(vii)(B) of this section do not represent each evaporative emission control system then the Administrator selects the highest expected evaporative emission vehicle from within the unrepresented evaporative system.

(viii) For high-altitude evaporative emission compliance for each evaporative emission family, the manufacturer must follow one of the procedures listed in paragraphs (b)(1)(viii) (A) and (B) of this section.

(A) The manufacturer will select for testing under high-altitude conditions the one nonexempt vehicle previously selected under paragraph (b)(1)(vii) (B) or (C) of this section which is expected to have the highest level of evaporative emissions when operated at high altitude; or

(B) In lieu of testing vehicles according to § 86.096–24(b)(1)(viii)(A), a manufacturer may provide a statement in its application for certification that, based on the manufacturer's engineering evaluation of such high-altitude emission testing as the manufacturer deems appropriate, all light-duty vehicles and light-duty trucks not exempt under § 86.090–8(h) or § 86.094–9(h) comply with the emission standards at high altitude.

(ix) Vehicles selected under paragraph (b)(1)(v)(A) of this section may be used to satisfy the requirements of paragraph (b)(1)(viii)(A) of this section.

(x) [Reserved]

(xi) For cold temperature CO exhaust emission compliance for each engine family, the Administrator will select for testing the vehicle expected to emit the highest emissions from the vehicles selected in accordance with paragraphs (b)(1) (i), (ii), (iii), and (iv) of this section. This vehicle is tested by the manufacturer in accordance with the test procedures in subpart C of this part or with alternative procedures requested by the manufacturer and approved in advance by the Administrator.

(xii) For CST exhaust emission compliance for each engine family, the Administrator will select for testing one vehicle from among the vehicles selected in accordance with paragraphs (b)(1) (i) through (iv) of this section. This vehicle is tested by the manufacturer in accordance with the test procedures set forth in subpart O of this part.

(2) *Otto-cycle heavy-duty emission data engines.* This paragraph applies to Otto-cycle heavy-duty emission data engines.

(i) through (ii) [Reserved]

(iii) The Administrator selects a maximum of two engines within each engine family based upon features indicating that they may have the highest emission levels of the engines in the engine family in accordance with the criteria described in paragraphs (b)(2)(iii) (A) and (B) of this section.

(A) The Administrator selects one emission data engine first based on the largest displacement within the engine family. Then from those within the largest displacement the Administrator selects, in the order listed, the engine with the highest fuel flow at the speed of maximum rated torque, with the most advanced spark timing, with no EGR or lowest EGR flow, and with no air pump or with the lowest actual flow air pump.

(B) The Administrator selects one additional engine from within each engine family. The engine selected is the engine expected to exhibit the highest emissions of those engines remaining in the engine family. If all engines within the engine family are similar, the Administrator may waive the requirements of this paragraph.

(iv) If the engines selected in accordance with paragraph (b)(2)(iii) of this section do not represent each engine displacement-exhaust emission control system combination, then the Administrator selects one engine of each engine displacement-exhaust emission control system combination not represented.

(v) Within an engine family/displacement/control system combination, the manufacturer may alter any emission data engine (or other engine including current or previous model year emission data engines and development engines provided they meet the emission data engines' protocol) to represent more than one selection under paragraph (b)(2)(iii) of this section.

(3) *Diesel heavy-duty emission data engines.* This paragraph applies to diesel-cycle heavy-duty emission data engines.

(i) Engines will be chosen to be run for emission data based upon engine family groupings. Within each engine family, the requirements of paragraphs (b)(3) (i) through (iv) of this section must be met.

(ii) Engines of each engine family will be divided into groups based upon their exhaust emission control systems. One engine of each engine system combination must be run for smoke emission data and gaseous emission data. Either the complete gaseous emission test or the complete smoke test may be conducted first. Within each combination, the engine that features the highest fuel feed per stroke, primarily at the speed of maximum rated torque and secondarily at rated speed, will usually be selected. If there are military engines with higher fuel rates than other engines in the same

engine system combinations, then one military engine is also selected. The engine with the highest fuel feed per stroke is usually the one selected.

(iii) The Administrator may select a maximum of one additional engine within each engine-system combination based upon features indicating that it may have the highest emission levels of the engines of that combination. In selecting this engine, the Administrator will consider such features as the injection system, fuel system, compression ratio, rated speed, rated horsepower, peak torque speed, and peak torque.

(iv) Within an engine family control system combination, the manufacturer may alter any emission data engine (or other engine including current or previous model year emission data engines and development engines provided they meet the emission data engines' protocol) to represent more than one selection under paragraphs (b)(3) (ii) and (iii) of this section.

(c) *Durability data*—(1) *Light-duty vehicle durability data vehicles.* This paragraph applies to light-duty vehicle durability data vehicles.

(i) A durability data vehicle is selected by the Administrator to represent each engine-system combination. The vehicle selected must be of the engine displacement with the largest projected sales volume of vehicles with that control-system combination in that engine family and is designated by the Administrator as to transmission type, fuel system, inertia weight class, and test weight.

(ii) A manufacturer may elect to operate and test additional vehicles to represent any engine-system combination. The additional vehicles must be of the same engine displacement, transmission type, fuel system, and inertia weight class as the vehicle selected for that engine-system combination in accordance with the provisions of paragraph (c)(1)(i) of this section. Notice of an intent to operate and test additional vehicles must be given to the Administrator no later than 30 days following notification of the test fleet selection.

(2) *Light-duty trucks.* This paragraph applies to vehicles, engines, subsystems, or components used to establish exhaust emission deterioration factors for light-duty trucks.

(i) The manufacturer must select the vehicles, engines, subsystems, or components to be used to determine exhaust emission deterioration factors for each engine-family control system combination. Whether vehicles, engines, subsystems, or components are used, they must be selected so that their emission deterioration characteristics may be expected to represent those of in-use vehicles, based on good engineering judgment.

(ii) [Reserved]

(3) *Heavy-duty engines.* This paragraph applies to engines, subsystems, or components used to establish exhaust emission deterioration factors for heavy-duty engines.

(i) The manufacturer must select the engines, subsystems, or components to be used to determine exhaust emission deterioration factors for each engine-family control system combination. Whether engines, subsystems, or components are used, they must be selected so that their emission deterioration characteristics may be expected to represent those of in-use engines, based on good engineering judgment.

(ii) [Reserved]

(d) For purposes of testing under § 86.094–26 (a)(9) or (b)(11), the Administrator may require additional emission data vehicles (or emission data engines) and durability data vehicles (light-duty vehicles only) identical in all material respects to vehicles (or engines) selected in accordance with paragraphs (b) and (c) of this section, provided that the number of vehicles (or engines) selected may not increase the size of either the emission data fleet or the durability data fleet by more than 20 percent or one vehicle (or engine), whichever is greater.

(e)(1) [Reserved]

(2) Any manufacturer may request to certify engine families with combined total sales of fewer than 10,000 light-duty vehicles, light-duty trucks, heavy-duty vehicles, and heavy-duty engines utilizing the procedures contained in § 86.094–14 for emission data vehicle selection and determination of deterioration factors. The deterioration factors are applied only to entire engine families.

(f) *Carryover and carryacross of durability and emission data.* In lieu of testing an emission data or durability data vehicle (or engine) selected under paragraph (b) or (c) of this section, and submitting data therefore, a manufacturer may, with the prior written approval of the Administrator, submit exhaust emission data and/or evaporative emission data, as applicable on a similar vehicle (or engine) for which certification has previously been obtained or for which all applicable data required under § 86.096–23 has previously been submitted.

(g) This paragraph applies to light-duty vehicles and light-duty trucks, but does not apply to the production vehicles selected under paragraph (h) of this section.

(1)(i) Where it is expected that more than 33 percent of a carline, within an engine-system combination, will be equipped with an item (whether that item is standard equipment or an option), the full estimated weight of that item must be included in the curb weight computation for each vehicle available with that item in that carline, within that engine-system combination.

(ii) Where it is expected that 33 percent or less of the carline, within an engine-system combination, will be equipped with an item (whether that item is standard equipment or an option), no weight for that item will be added in computing the curb weight for any vehicle in that carline, within that engine-system combination, unless that item is standard equipment on the vehicle.

(iii) In the case of mutually exclusive options, only the weight of the heavier option will be added in computing the curb weight.

(iv) Optional equipment weighing less than three pounds per item need not be considered.

(2)(i) Where it is expected that more than 33 percent of a carline, within an engine-system combination, will be equipped with an item (whether that item is standard equipment or an option) that can reasonably be expected to influence emissions, then such items must actually be installed (unless excluded under paragraph (g)(2)(ii) of this section) on all emission data and durability data vehicles of that carline, within that engine-system combination, on which the items are intended to be offered in production. Items that can reasonably be expected to influence emissions are: air conditioning, power steering, power brakes, and other items determined by the Administrator.

(ii) If the manufacturer determines by test data or engineering evaluation that the actual installation of the optional equipment required by paragraph (g)(2)(i) of this section does not affect the emissions or fuel economy values, the optional equipment need not be installed on the test vehicle.

(iii) The weight of the options must be included in the design curb weight and must also be represented in the weight of the test vehicles.

(iv) The engineering evaluation, including any test data, used to support the deletion of optional equipment from test vehicles, must be maintained by the manufacturer and be made available to the Administrator upon request.

(3) Where it is expected that 33 percent or less of a carline, within an engine-system combination, will be equipped with an item (whether that item is standard equipment or an option) that can reasonably be expected to influence emissions, that item may not be installed on any emission data vehicle or durability data vehicle of that carline, within that engine-system combination, unless that item is standard equipment on that vehicle or specifically required by the Administrator.

(h) *Production AMA Durability Program durability data vehicles.* This paragraph applies to light-duty vehicle durability data vehicles selected under the Production AMA Durability Program described in § 86.094–13.

(1) In order to update the durability data to be used to determine a deterioration factor for each engine family group, the Administrator will select durability data vehicles from the manufacturer's production line. Production vehicles will be selected from each model year's production for those vehicles certified using the Production AMA Durability Program procedures.

(i) The Administrator selects the production durability data vehicle designs from the designs that the manufacturer offers for sale. For each model year and for each engine family group, the Administrator may select production durability data vehicle designs of equal number to the number of engine families within the engine family group, up to a maximum of three vehicles.

(ii) The production durability data vehicles representing the designs selected in paragraph (h)(1)(i) of this section are randomly selected from the manufacturer's production. The Administrator makes these random selections unless the manufacturer (with prior approval of the Administrator) elects to make the random selections.

(iii) The manufacturer may select additional production durability data vehicle designs from within the engine family group. The production durability data vehicles representing these designs must be randomly selected from the manufacturer's production in accordance with paragraph (h)(1)(ii) of this section.

(iv) For each production durability data vehicle selected under paragraph (h)(1) of this section, the manufacturer must provide to the Administrator (before the vehicle is tested or begins service accumulation) the vehicle identification number. Before the vehicle begins service accumulation the manufacturer must also provide the Administrator with a description of the durability data vehicle as specified by the Administrator.

(v) In lieu of testing a production durability data vehicle selected under paragraph (h)(1) of this section, and submitting data therefrom, a manufacturer may, with the prior written approval of the Administrator, submit exhaust emission data from a production vehicle of the same configuration for which all applicable data has previously been submitted.

(2) If, within an existing engine family group, a manufacturer requests to certify vehicles of a new design, engine family, emission control system, or with any other durability-related design difference, the Administrator determines if the existing engine family group deterioration factor is appropriate for the new design. If the Administrator cannot make this determination or deems the deterioration factor not appropriate, the Administrator selects preproduction durability data vehicles under the provisions of paragraph (c) of this section. If vehicles are then certified using the new design, the Administrator may select production vehicles with the new design under the provisions of paragraph (h)(1) of this section.

(3) If a manufacturer requests to certify vehicles of a new design that the Administrator determines are a new engine family group, the Administrator selects preproduction durability data vehicles under the provisions of paragraph (c) of this section. If vehicles are then certified using the new design, the Administrator may select production vehicles of that design under the provisions of paragraph (h)(1) of this section.

[58 FR 58417, Nov. 1, 1993]

§86.096–26 Mileage and service accumulation; emission measurements.

Section 86.096–26 includes text that specifies requirements that differ from those specified in §§86.094–26 and 86.095–26. Where a paragraph in §86.094–26 or §86.095–26 is identical and applicable to §86.096–26, this may be indicated by specifying the corresponding paragraph and the statement ''[Reserved]. For guidance see §86.094–26.'' or ''[Reserved]. For guidance see §86.095–26.''

(a) through (b)(4)(i)(C) [Reserved]. For guidance see §86.094–26.

(b)(4)(i)(D) through (b)(4)(ii)(D) [Reserved]. For guidance see §86.095–26.

(b)(4)(iii) through (c)(3) [Reserved]. For guidance see §86.094–26.

(c)(4) The manufacturer shall determine, for each engine family, the number of hours at which the engine system combination is stabilized for emission-data testing. The manufacturer shall maintain, and provide to the Administrator if requested, a record of the rationale used in making this determination. The manufacturer may elect to accumulate 125 hours on each test engine within an engine family without making a determination. Any engine used to represent emission-data engine selections under §86.094–24(b)(2) shall be equipped with an engine system combination that has accumulated

at least the number of hours determined under this paragraph. Complete exhaust emission tests shall be conducted for each emission-data engine selection under § 86.094–24(b)(2). Evaporative emission controls must be connected, as described in § 86.1337–96(a)(1). The Administrator may determine under § 86.094–24(f) that no testing is required.

(d) [Reserved]. For guidance see § 86.094–26.

[58 FR 16024, Mar. 24, 1993]

§ 86.096–30 Certification.

Section 86.096–30 includes text that specifies requirements that differ from those specified in §§ 86.094–30 and 86.095–30. Where a paragraph in § 86.094–30 or § 86.095–30 is identical and applicable to § 86.096–30, this may be indicated by specifying the corresponding paragraph and the statement ''[Reserved]. For guidance see § 86.094–30.'' or ''[Reserved]. For guidance see § 86.095–30.''

(a)(1)(i) through (a)(2) [Reserved]. For guidance see § 86.094–30.

(a)(3)(i) through (a)(4)(iii) introductory text [Reserved]. For guidance see § 86.095–30.

(a)(4)(iii)(A) through (a)(4)(iii)(C) [Reserved]. For guidance see § 86.094–30.

(a)(4)(iv) introductory text [Reserved]. For guidance see § 86.095–30.

(a)(4)(iv)(A) through (a)(12) [Reserved]. For guidance see § 86.094–30.

(a)(13) [Reserved]. For guidance see § 86.095–30.

(a)(14) [Reserved]. For guidance see § 86.094–30.

(a)(15) For all light-duty vehicles certified to evaporative test procedures and accompanying standards specified under § 86.096–8:

(i) All certificates issued are conditional upon the manufacturer complying with all provisions of § 86.096–8 both during and after model year production.

(ii) Failure to meet the required implementation schedule sales percentages as specified in § 86.096–8 will be considered to be a failure to satisfy the conditions upon which the certificate was issued and the vehicles sold in violation of the implementation schedule shall not be covered by the certificate.

(iii) The manufacturer shall bear the burden of establishing to the satisfaction of the Administrator that the conditions upon which the certificate was issued were satisfied.

(16) For all light-duty trucks certified to evaporative test procedures and accompanying standards specified under § 86.096–9:

(i) All certificates issued are conditional upon the manufacturer complying with all provisions of § 86.096–9 both during and after model year production.

(ii) Failure to meet the required implementation schedule sales percentages as specified in § 86.096–9 will be considered to be a failure to satisfy the conditions upon which the certificate was issued and the vehicles sold in violation of the implementation schedule shall not be covered by the certificate.

(iii) The manufacturer shall bear the burden of establishing to the satisfaction of the Administrator that the conditions upon which the certificate was issued were satisfied.

(17) For all heavy-duty vehicles certified to evaporative test procedures and accompanying standards specified under § 86.096–10:

(i) All certificates issued are conditional upon the manufacturer complying with all provisions of § 86.096–10 both during and after model year production.

(ii) Failure to meet the required implementation schedule sales percentages as specified in § 86.096–10 will be considered to be a failure to satisfy the conditions upon which the certificate was issued and the vehicles sold in violation of the implementation schedule shall not be covered by the certificate.

(iii) The manufacturer shall bear the burden of establishing to the satisfaction of the Administrator that the conditions upon which the certificate was issued were satisfied.

(18) For all heavy-duty vehicles certified to evaporative test procedures and accompanying standards specified under § 86.098–11:

(i) All certificates issued are conditional upon the manufacturer complying with all provisions of § 86.098–11 both during and after model year production.

(ii) Failure to meet the required implementation schedule sales percentages as specified in § 86.098–11 will be

considered to be a failure to satisfy the conditions upon which the certificate was issued and the vehicles sold in violation of the implementation schedule shall not be covered by the certificate.

(iii) The manufacturer shall bear the burden of establishing to the satisfaction of the Administrator that the conditions upon which the certificate was issued were satisfied.

(19) For all light-duty vehicles and light light-duty trucks certified to standards under §§86.1710 through 86.1712, the provisions of paragraphs (a)(19) (i) through (iv) of this section apply.

(i) All certificates issued are conditional upon manufacturer compliance with all provisions of §§86.1710 through 86.1712 both during and after model year production.

(ii) Failure to meet the requirements of §86.1710 (a) through (d) will be considered to be a failure to satisfy the conditions upon which the certificate(s) was issued and the vehicles sold in violation of the fleet average NMOG standard shall not be covered by the certificate.

(iii) The manufacturer shall bear the burden of establishing to the satisfaction of the Administrator that the conditions upon which the certificate was issued were satisfied.

(iv) For recall and warranty purposes, vehicles not covered by a certificate because of a violation of this condition of the certificate will continue to be held to the standards stated in the certificate that would have otherwise applied to the vehicles.

(20) For all light-duty vehicles and light light-duty trucks certified to standards under §§86.1710 through 86.1712, the provisions of paragraphs (a)(20) (i) through (iv) of this section apply.

(i) All certificates issued are conditional upon manufacturer compliance with all provisions of §§86.1710 through 86.1712 both during and after model year production.

(ii) Failure to comply fully with the prohibition against a manufacturer selling credits that it has not generated or are not available, as specified in §86.1710(e), will be considered to be a failure to satisfy the conditions upon which the certificate(s) was issued and the vehicles sold in violation of this prohibition shall not be covered by the certificate.

(iii) The manufacturer shall bear the burden of establishing to the satisfaction of the Administrator that the conditions upon which the certificate was issued were satisfied.

(iv) For recall and warranty purposes, vehicles not covered by a certificate because of a violation of this condition of the certificate will continue to be held to the standards stated in the certificate that would have otherwise applied to the vehicles.

(21) For all light-duty vehicles and light light-duty trucks certified to standards under §§86.1710 through 86.1712, the provisions of paragraphs (a)(21) (i) through (iv) of this section apply.

(i) All certificates issued are conditional upon manufacturer compliance with all provisions of §§86.1710 through 86.1712 both during and after model year production.

(ii) Failure to comply fully with the prohibition against offering for sale Tier 1 vehicles and TLEVs in the Northeast Trading Region, as defined in §86.1702, after model year 2000 if vehicles with the same engine families are not certified and offered for sale in California in the same model year, as specified in §86.1711(a), will be considered to be a failure to satisfy the conditions upon which the certificate(s) was issued and the vehicles sold in violation of this prohibition shall not be covered by the certificate.

(iii) The manufacturer shall bear the burden of establishing to the satisfaction of the Administrator that the conditions upon which the certificate was issued were satisfied.

(iv) For recall and warranty purposes, vehicles not covered by a certificate because of a violation of this condition of the certificate will continue to be held to the standards stated in the certificate that would have otherwise applied to the vehicles.

(22) [Reserved]

(23)(i) The Administrator will issue a National LEV certificate of conformity for 1999 model year vehicles or engines certified to comply with the California TLEV, LEV, or ULEV emission standards.

(ii) This certificate of conformity shall be granted after the Administrator has received and reviewed the California Executive Order a manufacturer has received for the same vehicles or engines.

(iii) Vehicles or engines receiving a certificate of conformity under the provisions in this paragraph can only be sold in the states included in the NTR, as defined in § 86.1702, and those states where the sale of California-certified vehicles is otherwise authorized.

(24)(i) The Administrator will issue a National LEV certificate of conformity for 2000 model year vehicles or engines certified to comply with the California TLEV emission standards.

(ii) This certificate of conformity shall be granted after the Administrator has received and reviewed the California Executive Order a manufacturer has received for the same vehicles or engines.

(iii) Vehicles or engines receiving a certificate of conformity under the provisions in this paragraph can only be sold in the states included in the NTR, as defined in § 86.1702, and those states where the sale of California-certified vehicles is otherwise authorized.

(b) through (f) [Reserved]. For guidance see § 86.094–30.

[58 FR 16024, Mar. 24, 1993, as amended at 58 FR 34536, June 28, 1993; 62 FR 31233, June 6, 1997; 63 FR 965, Jan. 7, 1998]

§ 86.096–35 Labeling.

Section 86.096–35 includes text that specifies requirements that differ from § 86.095–35. Where a paragraph in § 86.095–35 is identical and applicable to § 86.096–35, this may be indicated by specifying the corresponding paragraph and the statement ''[Reserved]. For guidance see § 86.095–35.''

(a) introductory text through (a)(1)(iii)(L) [Reserved]. For guidance see § 86.095–35.

(a)(1)(iii)(M) For model years 1996 through 1998 light-duty vehicles, a clear indication of which test procedure was used to certify the evaporative family, e.g., ''Evaporative Family xx (§ 86.130–96 procedures)'' or ''Evaporative Family xx (§ 86.130–78 procedures).''

(N)(*1*) For vehicles exempted from compliance with certain revised performance warranty procedures, as specified in § 86.096–21(j), a statement indicating the specific performance warranty test(s) of 40 CFR part 85, subpart W not to be performed.

(*2*) For vehicles exempted from compliance with all revised performance warranty procedures, as specified in § 86.096–21(k), a statement indicating:

(*i*) that none of the performance warranty tests of 40 CFR part 85, subpart W is to be performed, and

(*ii*) the name of the Administrator-approved alternative test procedure to be performed.

(a)(2) Heading through (a)(2)(iii)(N) [Reserved]. For guidance see § 86.095–35.

(a)(2)(iii)(O) For model years 1996 through 1998 light-duty trucks, a clear indication of which test procedure was used to certify the evaporative family, e.g., ''Evaporative Family xx (§ 86.130–96 procedures)'' or ''Evaporative Family xx (§ 86.130–78 procedures).''

(P)(*1*) For vehicles exempted from compliance with certain revised performance warranty procedures, as specified in § 86.096–21(j), a statement indicating the specific performance warranty test(s) of 40 CFR part 85, subpart W not to be performed.

(*2*) For vehicles exempted from compliance with all revised performance warranty procedures, as specified in § 86.096–21(k), a statement indicating:

(*i*) that none of the performance warranty tests of 40 CFR part 85, subpart W, is to be performed, and

(*ii*) the name of the Administrator-approved alternative test procedure to be performed.

(a)(3) through (a)(4)(iii)(F) [Reserved]. For guidance see § 86.095–35.

(a)(4)(iii)(G) For model years 1996 through 1998 gasoline-fueled and methanol-fueled heavy-duty vehicles, a clear indication of which test procedure was used to certify the evaporative family, e.g., ''Evaporative Family xx (§ 86.1230–96 procedures)'' or ''Evaporative Family xx (§ 86.1230–85 procedures).''

(b) through (i) [Reserved]. For guidance see § 86.095–35.

[58 FR 16024, Mar. 24, 1993, as amended at 58 FR 34536, June 28, 1993; 58 FR 58421, Nov. 1, 1993]

§ 86.097–9 Emission standards for 1997 and later model year light-duty trucks.

(a)(1) *Standards*—(i) *Light light-duty trucks.* (A) Exhaust emissions from 1997 and later model year light light-duty trucks shall meet all standards in tables A97–1 and A97–2 in the rows designated with the applicable fuel type and loaded vehicle weight. Light light-duty trucks shall not exceed the applicable standards in table A97–1 and shall not exceed the applicable standards in table A97–2.

TABLE A97–1—INTERMEDIATE USEFUL LIFE STANDARDS (G/MI) FOR LIGHT LIGHT-DUTY TRUCKS

Fuel	LVW (lbs)	THC	NMHC	THCE	NMHCE	CO	NO_X	PM
Gasoline	0–3750	.....	0.25	.....	.....	3.4	0.4	0.08
Gasoline	3751–5750	.....	0.32	.....	.....	4.4	0.7	0.08
Diesel	0–3750	.....	0.25	.....	.....	3.4	1.0	0.08
Diesel	3751–5750	.....	0.32	.....	.....	4.4	.....	0.08
Methanol	0–3750	.....	.....	.....	0.25	3.4	0.4	0.08
Methanol	3751–5750	.....	.....	.....	0.32	4.4	0.7	0.08
Natural Gas	0–3750	.....	0.25	.....	.....	3.4	0.4	0.08
Natural Gas	3751–5750	.....	0.32	.....	.....	4.4	0.7	0.08
LPG	0–3750	.....	0.25	.....	.....	3.4	0.4	0.08
LPG	3751–5750	.....	0.32	.....	.....	4.4	0.7	0.08

TABLE A97–2—FULL USEFUL LIFE STANDARDS (G/MI) FOR LIGHT LIGHT-DUTY TRUCKS

Fuel	LVW (lbs)	THC [1]	NMHC	THCE [1]	NMHCE	CO	NO_X	PM
Gasoline	0–3750	0.80	0.31	.....	.....	4.2	0.6	0.10
Gasoline	3751–5750	0.80	0.40	.....	.....	5.5	0.97	0.10
Diesel	0–3750	0.80	0.31	.....	.....	4.2	1.25	0.10
Diesel	3751–5750	0.80	0.40	.....	.....	5.5	0.97	0.10
Methanol	0–3750	.....	.....	0.80	0.31	4.2	0.6	0.10
Methanol	3751–5750	.....	.....	0.80	0.40	5.5	0.97	0.10
Natural Gas	0–3750	.....	0.31	.....	.....	4.2	0.6	0.10
Natural Gas	3751–5750	.....	0.40	.....	.....	5.5	0.97	0.10
LPG	0–3750	0.80	0.31	.....	.....	4.2	0.6	0.10
LPG	3751–5750	0.80	0.40	.....	.....	5.5	0.97	0.10

[1] Full useful life is 11 years or 120,000 miles, whichever occurs first.

(B)(*1*) Vehicles subject to the standards of paragraph (a)(1)(i)(A) of this section shall be all actual U.S. sales of light-duty vehicles of the applicable model year by a manufacturer.

(*2*) A manufacturer can not use one set of engine families to meet its intermediate useful life standards and another to meet its full useful life standards. The same families which are used to meet the intermediate useful life standards will be required without deviation to meet the corresponding full useful life standards.

(ii) *Heavy light-duty trucks.* (A) Exhaust emissions from 1997 and later model year heavy light-duty trucks shall meet all standards in tables A97–3 and A97–4 in the rows designated with the applicable fuel type and adjusted loaded vehicle weight. Heavy light-duty trucks shall not exceed the applicable standards in table A97–3 and shall not exceed the applicable standards in table A97–4.

TABLE A97–3—INTERMEDIATE USEFUL LIFE STANDARDS (G/MI) FOR HEAVY LIGHT-DUTY TRUCKS

Fuel	ALVW (lbs)	THC	NMHC	THCE	NMHCE	CO	NO_X	PM
Gasoline	3751–5750	.....	0.32	.....	.....	4.4	0.7	.....
Gasoline	>5750	.....	0.39	.....	.....	5.0	1.1	.....
Diesel	3751–5750	.....	0.32	.....	.....	4.4	.....	.....
Diesel	>5750	.....	0.39	.....	.....	5.0	.....	.....
Methanol	3751–5750	.....	.....	.....	0.32	4.4	0.7	.....
Methanol	>5750	.....	.....	.....	0.39	5.0	1.1	.....
Natural Gas	3751–5750	.....	0.32	.....	.....	4.4	0.7	.....
Natural Gas	>5750	.....	0.39	.....	.....	5.0	1.1	.....
LPG	3751–5750	.....	0.32	.....	.....	4.4	0.7	.....

TABLE A97–3—INTERMEDIATE USEFUL LIFE STANDARDS (G/MI) FOR HEAVY LIGHT-DUTY TRUCKS—Continued

Fuel	ALVW (lbs)	THC	NMHC	THCE	NMHCE	CO	NO_X	PM
LPG	>5750	.....	0.39	.....	.....	5.0	1.1	.....

TABLE A97–4—FULL USEFUL LIFE STANDARDS (G/MI) FOR HEAVY LIGHT-DUTY TRUCKS

Fuel	ALVW (lbs)	THC	NMHC	THCE	NMHCE	CO	NO_X	PM
Gasoline	3751–5750	0.80	0.46	.....	.....	6.4	0.98	0.10
Gasoline	>5750	0.80	0.56	.....	.....	7.3	1.53	0.12
Diesel	3751–5750	0.80	0.46	.....	.....	6.4	0.98	0.10
Diesel	>5750	0.80	0.56	.....	.....	7.3	1.53	0.12
Methanol	3751–5750	.....	.....	0.80	0.46	6.4	0.98	0.10
Methanol	>5750	.....	.....	0.80	0.56	7.3	1.53	0.12
Natural Gas	3751–5750	.....	0.46	.....	.....	6.4	0.98	0.10
Natural Gas	>5750	.....	0.56	.....	.....	7.3	1.53	0.12
LPG	3751–5750	0.80	0.46	.....	.....	6.4	0.98	0.10
LPG	>5750	0.80	0.56	.....	.....	7.3	1.53	0.12

(B)(*1*) Vehicles subject to the standards of paragraph (a)(1)(ii)(A) of this section shall be all actual U.S. sales of light-duty vehicles of the applicable model year by a manufacturer.

(*2*) A manufacturer can not use one set of engine families to meet its intermediate useful life standards and another to meet its full useful life standards. The same families which are used to meet the intermediate useful life standards will be required without deviation to meet the corresponding full useful life standards.

(iii) Exhaust emissions of carbon monoxide from 1997 and later model year light-duty trucks shall not exceed 0.50 percent of exhaust gas flow at curb idle at a useful life of 11 years or 120,000 miles, whichever first occurs (for Otto-cycle and methanol-natural gas- and liquefied petroleum gas-fueled diesel-cycle light-duty trucks only).

(iv) CST emissions from gasoline-fueled Otto-cycle light-duty trucks measured and calculated in accordance with subpart O of this part may not exceed the standards listed in paragraphs (a)(1)(iv) (A) and (B) of this section.

(A) Hydrocarbons: 100 ppm as hexane.

(B) Carbon monoxide: 0.5%.

(2) The standards set forth in paragraphs (a)(1)(i) and (a)(1)(ii) of this section refer to the exhaust emitted over a driving schedule as set forth in subpart B of this part and measured and calculated in accordance with those procedures. The test weight basis for light light-duty trucks, for the purposes of determining equivalent test weight as prescribed in § 86.129–94, shall be loaded vehicle weight. The test weight basis for heavy light-duty trucks, for the purposes of determining equivalent test weight as prescribed in § 86.129–94, shall be adjusted loaded vehicle weight. The standard set forth in paragraph (a)(1)(iii) of this section refers to the exhaust emitted at curb idle and measured and calculated in accordance with the procedures set forth in subpart P of this part.

(3) The standards set forth in paragraph (a)(1)(iv) of this section refer to the exhaust emitted during the CST as set forth in subpart O of this part and measured and calculated in accordance with those provisions.

(b) [Reserved]. For guidance see § 86.096–9.

(c) No crankcase emissions shall be discharged into the ambient atmosphere from any 1997 and later model year light-duty truck.

(d) through (f) [Reserved]

(g) Any model year 1997 and later light-duty truck that a manufacturer wishes to certify for sale shall meet the emission standards under both low- and high-altitude conditions as specified in § 86.082–2, except as provided in paragraphs (h) and (i) of this section. Vehicles shall meet emission standards under both low- and high-altitude conditions without manual adjustments or modifications. Any emission control

device used to meet emission standards under high-altitude conditions shall initially actuate (automatically) no higher than 4,000 feet above sea level.

(h) The manufacturer may exempt 1997 and later model year light-duty trucks from compliance at high altitude with the emission standards set forth in paragraphs (a) and (b) of this section, if the vehicles are not intended for sale at high altitude and if the requirements of paragraphs (h) (1) and (2) of this section are met.

(1) A vehicle configuration shall only be considered eligible for exemption under paragraph (h) of this section if the requirements of any of paragraphs (h)(1) (i), (ii), (iii), or (iv) of this section are met.

(i) Its design parameters (displacement-to-weight ratio (D/W) and engine speed-to-vehicle-speed ratio (N/V)) fall within the exempted range for that manufacturer for that year. The exempted range is determined according to the following procedure:

(A) The manufacturer shall graphically display the D/W and N/V data of all vehicle configurations it will offer for the model year in question. The axis of the abscissa shall be D/W (where (D) is the engine displacement expressed in cubic centimeters and (W) is the gross vehicle weight (GVW) expressed in pounds), and the axis of the ordinate shall be N/V (where (N) is the crankshaft speed expressed in revolutions per minute and (V) is the vehicle speed expressed in miles per hour). At the manufacturer's option, either the 1:1 transmission gear ratio or the lowest numerical gear ratio available in the transmission will be used to determine N/V. The gear selection must be the same for all N/V data points on the manufacturer's graph. For each transmission/axle ratio combination, only the lowest N/V value shall be used in the graphical display.

(B) The product line is then defined by the equation, $N/V=C(D/W)^{-0.9}$ where the constant, C, is determined by the requirement that all the vehicle data points either fall on the line or lie to the upper right of the line as displayed on the graphs.

(C) The exemption line is then defined by the equation, $N/V=C(0.84\ D/W)^{-0.9}$ where the constant, C, is the same as that found in paragraph (h)(1)(i)(B) of this section.

(D) The exempted range includes all values of N/V and D/W which simultaneously fall to the lower left of the exemption line as drawn on the graph.

(ii) Its design parameters fall within the alternate exempted range for that manufacturer that year. The alternate exempted range is determined by substituting rated horsepower (hp) for displacement (D) in the exemption procedure described in paragraph (h)(1)(i) of this section and by using the product line $N/V=C(hp/W)^{-0.9}$.

(A) Rated horsepower shall be determined by using the Society of Automotive Engineers Test Procedure J 1349 (copies may be obtained from SAE, 400 Commonwealth Dr., Warrendale, PA 15096), or any subsequent version of that test procedure. Any of the horsepower determinants within that test procedure may be used, as long as it is used consistently throughout the manufacturer's product line in any model year.

(B) No exemptions will be allowed under paragraph (h)(1)(ii) of this section to any manufacturer that has exempted vehicle configurations as set forth in paragraph (h)(1)(i) of this section.

(iii) Its acceleration time (the time it takes a vehicle to accelerate from 0 to a speed not less than 40 miles per hour and not greater than 50 miles per hour) under high-altitude conditions is greater than the largest acceleration time under low-altitude conditions for that manufacturer for that year. The procedure to be followed in making this determination is:

(A) The manufacturer shall list the vehicle configuration and acceleration time under low-altitude conditions of that vehicle configuration which has the highest acceleration time under low-altitude conditions of all the vehicle configurations it will offer for the model year in question. The manufacturer shall also submit a description of the methodology used to make this determination.

(B) The manufacturer shall then list the vehicle configurations and acceleration times under high-altitude conditions of all those vehicles configurations which have higher acceleration

times under high-altitude conditions than the highest acceleration time at low altitude identified in paragraph (h)(1)(iii)(A) of this section.

(iv) In lieu of performing the test procedure of paragraph (h)(1)(iii) of this section, its acceleration time can be estimated based on the manufacturer's engineering evaluation, in accordance with good engineering practice, to meet the exemption criteria of paragraph (h)(1)(iii) of this section.

(2) A vehicle shall only be considered eligible for exemption under this paragraph if at least one configuration of its model type (and transmission configuration in the case of vehicles equipped with manual transmissions, excluding differences due to the presence of overdrive) is certified to meet emission standards under high-altitude conditions as specified in paragraphs (a) through (g) of this section. The Certificate of Conformity (the Certificate) covering any exempted configuration(s) will also apply to the corresponding non-exempt configuration(s) required under this subparagraph. As a condition to the exemption, any suspension, revocation, voiding, or withdrawal of the Certificate as it applies to a non-exempt configuration for any reason will result in a suspension of the Certificate as it applies to the corresponding exempted configuration(s) of that model type, unless there is at least one other corresponding non-exempt configuration of the same model type still covered by the Certificate. The suspension of the Certificate as it applies to the exempted configuration(s) will be terminated when any one of the following occurs:

(i) Another corresponding non-exempt configuration(s) receive(s) coverage under the Certificate; or

(ii) Suspension of the Certificate as it applies to the corresponding non-exempt configuration(s) is terminated; or

(iii) The Agency's action(s), with respect to suspension, revocation, voiding or withdrawal of the Certificate as it applies to the corresponding non-exempt configuration(s), is reversed.

(3) The sale of a vehicle for principal use at a designated high-altitude location that has been exempted as set forth in paragraph (h)(1) of this section will be considered a violation of section 203(a)(1) of the Clean Air Act.

(i)(1) The manufacturers may exempt 1997 and later model year light-duty trucks from compliance at low altitude with the emission standards set forth in paragraphs (a) and (b) of this section if the vehicles:

(i) Are not intended for sale at low altitude; and

(ii) Are equipped with a unique, high-altitude axle ratio (rear-wheel drive vehicles) or a unique, high-altitude drivetrain (front-wheel drive vehicles) with a higher N/V ratio than other configurations of that model type which are certified in compliance with the emission standards of paragraphs (a) and (b) of this section under low-altitude conditions.

(2) The sale of a vehicle for principal use at low altitude that has been exempted as set forth in paragraph (i)(1) of this section will be considered a violation of section 203(a)(1) of the Clean Air Act.

(j) Any light-duty truck that a manufacturer wishes to certify for sale under the provisions of paragraphs (h) or (i) of this section is subject to the provisions of subpart Q of this part.

(k)(1) *Cold Temperature Carbon Monoxide (CO) Standards—Light light-duty trucks.* Exhaust emissions from 1997 and later model year light light-duty trucks with a loaded vehicle weight of 3,750 lbs or less shall not exceed the cold temperature CO standard of 10.0 grams per mile and light light-duty trucks with a loaded vehicle weight of greater than 3,750 lbs shall not exceed a cold temperature CO standard of 12.5 grams per mile, both for an intermediate useful life of 50,000 miles and as measured and calculated under the provisions set forth in subpart C of this part. This standard applies under both low and high altitude conditions.

(2) *Heavy light-duty trucks.* Exhaust emissions from 1997 and later model year heavy light-duty trucks shall not exceed the cold temperature CO standard of 12.5 grams per mile for an intermediate useful life of 50,000 miles, as measured and calculated under the provisions set forth in subpart C of this

part. This standard applies under both low and high altitude conditions.

[56 FR 25757, June 5, 1991, as amended at 57 FR 31916, July 17, 1992; 58 FR 16025, Mar. 24, 1993; 58 FR 58421, Nov. 1, 1993; 59 FR 48500, Sept. 21, 1994; 60 FR 34335, June 30, 1995]

§86.098–2 Definitions.

The definitions of §86.096–2 continue to apply to 1996 and later model year vehicles. The definitions listed in this section apply beginning with the 1998 model year.

Dispensed fuel temperature means the temperature (deg.F or deg.C may be used) of the fuel being dispensed into the tank of the test vehicle during a refueling test.

Evaporative/refueling emission control system means a unique combination within an evaporative/refueling family of canister adsorptive material, purge system configuration, purge strategy, and other parameters determined by the Administrator to affect evaporative and refueling emission control system durability or deterioration factors.

Evaporative/refueling emission family means the basic classification unit of a manufacturers' product line used for the purpose of evaporative and refueling emissions test fleet selection and determined in accordance with §86.098–24.

Fixed liquid level gauge means a type of liquid level gauge used on liquefied petroleum gas-fueled vehicles which uses a relatively small positive shutoff valve and is designed to indicate when the liquid level in the fuel tank being filled reaches the proper fill level. The venting of fuel vapor and/or liquid fuel to the atmosphere during the refueling event is generally associated with the use of the fixed liquid level gauge.

Integrated refueling emission control system means a system where vapors resulting from refueling are stored in a common vapor storage unit(s) with other evaporative emissions of the vehicle and are purged through a common purge system.

Non-integrated refueling emission control system means a system where fuel vapors from refueling are stored in a vapor storage unit assigned solely to the function of storing refueling vapors.

Refueling emissions means evaporative emissions that emanate from a motor vehicle fuel tank(s) during a refueling operation.

Refueling emissions canister(s) means any vapor storage unit(s) that is exposed to the vapors generated during refueling.

Resting losses means evaporative emissions that may occur continuously, that are not diurnal emissions, hot soak emissions, refueling emissions, running losses, or spitback emissions.

Useful life means:

(1) For light-duty vehicles, and for light light-duty trucks not subject to the Tier 0 standards of §86.094–9(a), intermediate useful life and/or full useful life. Intermediate useful life is a period of use of 5 years or 50,000 miles, whichever occurs first. Full useful life is a period of use of 10 years or 100,000 miles, whichever occurs first, except as otherwise noted in §86.094–9. The useful life of evaporative and/or refueling emission control systems on the portion of these vehicles subject to the evaporative emission test requirements of §86.130–96, and/or the refueling emission test requirements of §86.151–98, is defined as a period of use of 10 years or 100,000 miles, whichever occurs first.

(2) For light light-duty trucks subject to the Tier 0 standards of §86.094–9(a), and for heavy light-duty truck engine families, intermediate and/or full useful life. Intermediate useful life is a period of use of 5 years or 50,000 miles, whichever occurs first. Full useful life is a period of use of 11 years or 120,000 miles, whichever occurs first. The useful life of evaporative emission control systems on the portion of these vehicles subject to the evaporative emission test requirements of §86.130–96 is also defined as a period of 11 years or 120,000 miles, whichever occurs first.

(3) For an Otto-cycle heavy-duty engine family:

(i) For hydrocarbon and carbon monoxide standards, a period of use of 8 years or 110,000 miles, whichever first occurs.

(ii) For the oxides of nitrogen standard, a period of use of 10 years or 110,000 miles, whichever first occurs.

(iii) For the portion of evaporative emission control systems subject to

the evaporative emission test requirements of § 86.1230–96, a period of use of 10 years or 110,000 miles, whichever occurs first.

(4) For a diesel heavy-duty engine family:

(i) For light heavy-duty diesel engines, for hydrocarbon, carbon monoxide, and particulate standards, a period of use of 8 years or 110,000 miles, whichever first occurs.

(ii) For light heavy-duty diesel engines, for the oxides of nitrogen standard, a period of use of 10 years or 110,000 miles, whichever first occurs.

(iii) For medium heavy-duty diesel engines, for hydrocarbon, carbon monoxide, and particulate standards, a period of use of 8 years or 185,000 miles, whichever first occurs.

(iv) For medium heavy-duty diesel engines, for the oxides of nitrogen standard, a period of use of 10 years or 185,000 miles, whichever first occurs.

(v) For heavy heavy-duty diesel engines, for hydrocarbon, carbon monoxide, and particulate standards, a period of use of 8 years or 290,000 miles, whichever first occurs, except as provided in paragraph (3)(vii) of this definition.

(vi) For heavy heavy-duty diesel engines, for the oxides of nitrogen standard, a period of use of 10 years or 290,000 miles, whichever first occurs.

(vii) For heavy heavy-duty diesel engines used in urban buses, for the particulate standard, a period of use of 10 years or 290,000 miles, whichever first occurs.

[59 FR 16288, Apr. 6, 1994, as amended at 59 FR 48501, Sept. 21, 1994]

§ 86.098–3 Abbreviations.

(a) The abbreviations in § 86.096–3 continue to apply. The abbreviations in this section apply beginning with the 1998 model year.

(b) The abbreviations of this section apply to this subpart, and also to subparts B, E, F, G, K, M, N, and P of this part, and have the following meanings:

T_D—Dispensed fuel temperature
ABT—Averaging, banking, and trading
HDE—Heavy-duty engine

[62 FR 54716, Oct. 21, 1997]

§ 86.098–7 Maintenance of records; submittal of information; right of entry.

Section 86.098–7 includes text that specifies requirements that differ from those specified in §§ 86.091–7, 86.094–7 and 86.096–7. Where a paragraph in § 86.091–7, § 86.094–7 or § 86.096–7 is identical and applicable to § 86.098–7, this may be indicated by specifying the corresponding paragraph and the statement ''[Reserved]. For guidance see § 86.091–7.'' or ''[Reserved]. For guidance see § 86.094–7.'' or ''[Reserved]. For guidance see § 86.096–7.''.

(a) introductory text through (a)(2) [Reserved]. For guidance see § 86.091–7.

(a)(3) [Reserved]. For guidance see § 86.094–7.

(b) through (c)(2) [Reserved]. For guidance see § 86.091–7.

(c)(3) [Reserved]. For guidance see § 86.094–7.

(c)(4) through (d)(1)(v) [Reserved]. For guidance see § 86.091–7.

(d)(1)(vi) through (d)(2)(iv) [Reserved]. For guidance see § 86.094–7.

(d)(3) through (g) [Reserved]. For guidance see § 86.091–7.

(h)(1) through (h)(5) [Reserved]. For guidance see § 86.094–7.

(h)(6) *Voiding a certificate.* (i) EPA may void ab initio a certificate for a vehicle certified to Tier 0 certification standards or to the respective evaporative and/or refueling test procedure and accompanying evaporative and/or refueling standards as set forth or otherwise referenced in §§ 86.098–8, 86.098–9, or 86.098–10 for which the manufacturer fails to retain the records required in this section or to provide such information to the Administrator upon request.

(h)(6)(ii) to (h)(7)(vi) [Reserved]. For guidance see § 86.096–7.

(h)(6)(vii) EPA evaporative/refueling family.

[59 FR 16288, Apr. 6, 1994, as amended at 60 FR 43888, Aug. 23, 1995]

§ 86.098–8 Emission standards for 1998 and later model year light-duty vehicles.

Section 86.098–8 includes text that specifies requirements that differ from § 86.096–8. Where a paragraph in § 86.096–8 is identical and applicable to § 86.098–8, this may be indicated by specifying

the corresponding paragraph and the statement ''[Reserved]. For guidance see §86.096–8.''

(a) through (b)(5) [Reserved]. For guidance see §86.096–8.

(b)(6) Vehicles certified to the refueling standards set forth in paragraph (d) of this section are not required to demonstrate compliance with the fuel dispensing spitback standards contained in §86.096–8 (b)(1)(iii) and (b)(2)(iii): *Provided*, that they meet the requirements of §86.098–28(f).

(c) [Reserved]. For guidance see §86.096–8.

(d) Refueling emissions from 1998 and later model year gasoline-fueled and methanol-fueled Otto-cycle and petroleum-fueled and methanol-fueled diesel-cycle light-duty vehicles shall not exceed the following standards. The standards apply equally to certification and in-use vehicles.

(1) *Standards*—(i) *Hydrocarbons (for gasoline-fueled Otto-cycle and petroleum-fueled diesel-cycle vehicles)*. 0.20 gram per gallon (0.053 gram per liter) of fuel dispensed.

(ii) *Total hydrocarbon equivalent (for methanol-fueled vehicles)*. 0.20 gram per gallon (0.053 gram per liter) of fuel dispensed.

(iii) *Hydrocarbons (for liquefied petroleum gas-fueled vehicles)*. 0.15 gram per gallon (0.04 gram per liter) of fuel dispensed.

(iv) *Refueling receptacle (for natural gas-fueled vehicles)*. Refueling receptacles on natural gas-fueled vehicles shall comply with the receptacle provisions of the ANSI/AGA NGV1 standard-1994 (as incorporated by reference in §86.1).

(2)(i) The standards set forth in paragraphs (d)(1) (i) and (ii) of this section refer to a sample of refueling emissions collected under the conditions set forth in subpart B of this part and measured in accordance with those procedures.

(ii) For vehicles powered by petroleum-fueled diesel-cycle engines, the provisions set forth in paragraph (d)(1) of this section may be waived: *Provided*, that the manufacturer complies with the provisions of §86.098–28(g).

(3)(i) A minimum of the percentage shown in table A98–08 of a manufacturer's sales of the applicable model year's gasoline- and methanol-fueled Otto-cycle and petroleum-fueled and methanol-fueled diesel-cycle light-duty vehicles shall be tested under the procedures in subpart B of this part indicated for 1998 and later model years, and shall not exceed the standards described in paragraph (d)(1) of this section. Vehicles certified in accordance with paragraph (d)(2)(ii) of this section, as determined by the provisions of §86.098–28(g), shall not be counted in the calculation of the percentage of compliance.

TABLE A98–08—IMPLEMENTATION SCHEDULE FOR LIGHT-DUTY VEHICLE REFUELING EMISSION TESTING

Model year	Sales percentage
1998	40
1999	80
2000 and subsequent	100

(ii) Small volume manufacturers, as defined in §86.094–14(b) (1) and (2), are exempt from the implementation schedule of table A98–08 of this section for model years 1998 and 1999. For small volume manufacturers, the standards of paragraph (d) of this section, and the associated test procedures, shall not apply until model year 2000, when 100 percent compliance with the standards of this section is required. This exemption does not apply to small volume engine families as defined in §86.094–14(b)(5).

(e) through (f) [Reserved]

(g) through (k) [Reserved]. For guidance see §86.096–8.

[59 FR 16289, Apr. 6, 1994, as amended at 59 FR 48501, Sept. 21, 1994]

§86.098–10 Emission standards for 1998 and later model year Otto-cycle heavy-duty engines and vehicles.

Section 86.098–10 includes text that specifies requirements that differ from §86.096–10. Where a paragraph in §86.096–10 is identical and applicable to §86.098–10, this may be indicated by specifying the corresponding paragraph and the statement ''[Reserved]. For guidance see §86.096–10.''

(a)(1) Exhaust emissions from new 1998 and later model year Otto-cycle heavy-duty engines shall not exceed:

(i) *For Otto-cycle heavy-duty engines fueled with either gasoline or liquefied petroleum gas,* and intended for use in all vehicles except as provided in paragraph (a)(3) of this paragraph.

(A) *Hydrocarbons.* 1.1 grams per brake horsepower-hour (0.41 gram per megajoule), as measured under transient operating conditions.

(B) *Carbon monoxide.* (*1*) 14.4 grams per brake horsepower-hour (5.36 grams per megajoule), as measured under transient operating conditions.

(*2*) *For Otto-cycle heavy-duty engines fueled with either gasoline or liquefied petroleum gas and utilizing aftertreatment technology:* 0.50 percent of exhaust gas flow at curb idle.

(C) *Oxides of nitrogen* (*1*) 4.0 grams per brake horsepower-hour (1.49 grams per megajoule), as measured under transient operating conditions.

(*2*) A manufacturer may elect to include any or all of its gasoline-fueled Otto-cycle HDE families in any or all of the NO_X or NO_X plus NMHC ABT programs for HDEs, within the restrictions described in § 86.098–15 as applicable. If the manufacturer elects to include engine families in any of these programs, the NO_X FELs may not exceed 5.0 grams per brake horsepower-hour (1.9 grams per megajoule). This ceiling value applies whether credits for the family are derived from averaging, trading or banking programs.

(*3*) A manufacturer may elect to include any or all of its liquified petroleum gas-fueled Otto-cycle HDE families in any or all of the NO_X or NO_X plus NMHC ABT programs for HDEs, within the restrictions described in § 86.098–15 as applicable. If the manufacturer elects to include engine families in any of these programs, the NO_X FELs may not exceed 5.0 grams per brake horsepower-hour (1.9 grams per megajoule). This ceiling value applies whether credits for the family are derived from averaging, trading or banking programs.

(ii) *For Otto-cycle heavy-duty engines fueled with either gasoline or liquefied petroleum gas,* and intended for use only in vehicles with a Gross Vehicle Weight Rating of greater than 14,000 pounds.

(A) *Hydrocarbons.* 1.9 grams per brake horsepower-hour (0.71 gram per megajoule), as measured under transient operating conditions.

(B) *Carbon Monoxide.* (*1*) 37.1 grams per brake horsepower-hour (13.8 grams per megajoule), as measured under transient operating conditions.

(*2*) *For Otto-cycle heavy-duty engines fueled with either gasoline or liquefied petroleum gas and utilizing aftertreatment technology:* 0.50 percent of exhaust gas flow at curb idle.

(C) *Oxides of nitrogen* (*1*) 4.0 grams per brake horsepower-hour (1.49 grams per megajoule), as measured under transient operating conditions.

(*2*) A manufacturer may elect to include any or all of its gasoline-fueled Otto-cycle HDE families in any or all of the NO_X or NO_X plus NMHC ABT programs for HDEs, within the restrictions described in § 86.098–15 as applicable. If the manufacturer elects to include engine families in any of these programs, the NO_X FELs may not exceed 5.0 grams per brake horsepower-hour (1.9 grams per megajoule). This ceiling value applies whether credits for the family are derived from averaging, trading or banking programs.

(*3*) A manufacturer may elect to include any or all of its liquified petroleum gas-fueled Otto-cycle HDE families in any or all of the NO_X or NO_X plus NMHC ABT programs for HDEs, within the restrictions described in § 86.098–15 as applicable. If the manufacturer elects to include engine families in any of these programs, the NO_X FELs may not exceed 5.0 grams per brake horsepower-hour (1.9 grams per megajoule). This ceiling value applies whether credits for the family are derived from averaging, trading or banking programs.

(iii) *For methanol-fueled Otto cycle heavy-duty engines* intended for use in all vehicles, except as provided in paragraph (a)(3) of this section.

(A) *Total Hydrocarbon Equivalent.* 1.1 gram per brake horsepower-hour (0.41 gram per megajoule), as measured under transient operating conditions.

(B) *Carbon monoxide.* (*1*) 14.4 grams per brake horsepower-hour (5.36 grams per megajoule), as measured under transient operating conditions.

(*2*) 0.50 percent of exhaust gas flow at curb idle.

(C) *Oxides of nitrogen.* (*1*) 4.0 grams per brake horsepower-hour (1.49 grams per megajoule), as measured under transient operating conditions.

(*2*) A manufacturer may elect to include any or all of its methanol-fueled Otto-cycle HDE families in any or all of the NO_X or NO_X plus NMHC ABT programs for HDEs, within the restrictions described in § 86.098–15 as applicable. If the manufacturer elects to include engine families in any of these programs, the NO_X FELs may not exceed 5.0 grams per brake horsepower-hour (1.9 grams per megajoule). This ceiling value applies whether credits for the family are derived from averaging, trading or banking programs.

(iv) *For methanol-fueled Otto-cycle heavy-duty engines* intended for use only in vehicles with a Gross Vehicle Weight Rating of greater than 14,000 lbs.

(A) *Total Hydrocarbon Equivalent.* 1.9 grams per brake horsepower-hour (0.71 gram per megajoule), as measured under transient operating conditions.

(B) *Carbon monoxide.* (*1*) 37.1 grams per brake horsepower-hour (13.8 grams per megajoule), as measured under transient operating conditions.

(*2*) 0.50 percent of exhaust gas flow at curb idle.

(C) *Oxides of nitrogen.* (*1*) 4.0 grams per brake horsepower-hour (1.49 grams per megajoule), as measured under transient operating conditions.

(*2*) A manufacturer may elect to include any or all of its methanol-fueled Otto-cycle HDE families in any or all of the NO_X or NO_X plus NMHC ABT programs for HDEs, within the restrictions described in § 86.098–15 as applicable. If the manufacturer elects to include engine families in any of these programs, the NO_X FELs may not exceed 5.0 grams per brake horsepower-hour (1.9 grams per megajoule). This ceiling value applies whether credits for the family are derived from averaging, trading or banking programs.

(v) *For natural gas-fueled Otto-cycle heavy-duty engines* intended for use in all vehicles except as provided in paragraph (a)(3) of this section.

(A) *Nonmethane hydrocarbons.* 0.9 gram per brake horsepower-hour (0.33 gram per megajoule), as measured under transient operating conditions.

(B) *Carbon monoxide.* (*1*) 14.4 grams per brake horsepower-hour (5.36 grams per megajoule), as measured under transient operating conditions.

(*2*) *For natural gas-fueled Otto-cycle heavy-duty engines utilizing aftertreatment technology.* 0.50 percent of exhaust flow at curb idle.

(C) *Oxides of nitrogen.* (*1*) 5.0 grams per brake horsepower-hour (1.9 grams per megajoule), as measured under transient operating conditions.

(*2*) A manufacturer may elect to include any or all of its natural gas-fueled Otto-cycle HDE families in any or all of the NO_X or NO_X plus NMHC ABT programs for HDEs, within the restrictions described in § 86.098–15 as applicable. If the manufacturer elects to include engine families in any of these programs, the NO_X FELs may not exceed 5.0 grams per brake horsepower-hour (1.9 grams per megajoule). This ceiling value applies whether credits for the family are derived from averaging, trading or banking programs.

(vi) For *natural gas-fueled Otto-cycle engines* intended for use only in vehicles with a Gross Vehicle Weight Rating of greater than 14,000 pounds.

(A) *Nonmethane hydrocarbons.* 1.7 grams per brake horsepower-hour (0.63 gram per megajoule), as measured under transient operating conditions.

(B) *Carbon monoxide.* (*1*) 37.1 grams per brake horsepower-hour (13.8 grams per megajoule), as measured under transient operating conditions.

(*2*) *For natural gas-fueled Otto-cycle heavy-duty engines utilizing aftertreatment technology.* 0.50 percent of exhaust gas flow at curb idle.

(C) *Oxides of nitrogen.* (*1*) 5.0 grams per brake horsepower-hour (1.9 grams per megajoule), as measured under transient operating conditions.

(*2*) A manufacturer may elect to include any or all of its natural gas-fueled Otto-cycle HDE families in any or all of the NO_X or NO_X plus NMHC ABT programs for HDEs, within the restrictions described in § 86.098–15 as applicable. If the manufacturer elects to include engine families in any of these programs, the NO_X FELs may not exceed 5.0 grams per brake horsepower-hour (1.9 grams per megajoule). This ceiling value applies whether credits

for the family are derived from averaging, trading or banking programs.

(2) The standards set forth in paragraph (a)(1) of this section refer to the exhaust emitted over the operating schedule set forth in paragraph (f)(1) of appendix I to this part, and measured and calculated in accordance with the procedures set forth in subpart N or P of this part.

(3)(i) A manufacturer may certify one or more Otto-cycle heavy-duty engine configurations intended for use in all vehicles to the emission standards set forth in paragraphs (a)(1)(ii), (a)(1)(iv) or (a)(1)(vi) of this paragraph: *Provided*, that the total model year sales of such configuration(s), segregated by fuel type, being certified to the emission standards in paragraph (a)(1)(ii) of this section represent no more than five percent of total model year sales of each fuel type Otto-cycle heavy-duty engine intended for use in vehicles with a Gross Vehicle Weight Rating of up to 14,000 pounds by the manufacturer.

(ii) The configurations certified to the emission standards of paragraphs (a)(1) (ii) and (vi) of this section under the provisions of paragraph (a)(3)(i) of this section shall still be required to meet the evaporative emission standards set forth in paragraphs § 86.096–10(b)(1)(i), (b)(2)(i) and (b)(3)(i).

(iii) The configurations certified to the emission standards of paragraphs (a)(1) (ii) and (iv) of this section under the provisions of paragraphs (a)(3) (i) and (ii) of this section shall still be required to meet the evaporative emission standards set forth in paragraphs (b)(1)(i), (b)(2)(i), and (b)(3)(i) of this section.

(b) [Reserved]. For guidance see § 86.096–10.

(c) No crankcase emissions shall be discharged into the ambient atmosphere from any new 1998 or later model year Otto-cycle heavy-duty engine.

(d) Every manufacturer of new motor vehicle engines subject to the standards prescribed in this section shall, prior to taking any of the actions specified in section 203(a)(1) of the Act, test or cause to be tested motor vehicle engines in accordance with applicable procedures in subpart N or P of this part to ascertain that such test engines meet the requirements of paragraphs (a) and (c) of this section.

[58 FR 15800, Mar. 24, 1993, as amended at 59 FR 48501, Sept. 21, 1994; 62 FR 54716, Oct. 21, 1997]

§ 86.098–11 Emission standards for 1998 and later model year diesel heavy-duty engines and vehicles.

(a) Exhaust emissions from new 1998 and later model year diesel heavy-duty engines shall not exceed the following:

(1)(i) *Hydrocarbons (for diesel engines fueled with either petroleum-fuel or liquefied petroleum gas).* 1.3 grams per brake horsepower-hour (0.48 gram per megajoule), as measured under transient operating conditions.

(ii) *Total Hydrocarbon Equivalent (for methanol-fueled diesel engines).* 1.3 grams per brake horsepower-hour (0.48 gram per megajoule), as measured under transient operating conditions.

(iii) *Nonmethane hydrocarbons (for natural gas-fueled diesel engines).* 1.2 grams per brake horsepower-hour (0.45 gram per megajoule), as measured under transient operating conditions.

(2) *Carbon monoxide.* (i) 15.5 grams per brake horsepower-hour (5.77 grams per megajoule), as measured under transient operating conditions.

(ii) 0.50 percent of exhaust gas flow at curb idle (methanol-, natural gas-, and liquefied petroleum gas-fueled diesel only).

(3) *Oxides of Nitrogen.* (i) 4.0 grams per brake horsepower-hour (1.49 grams per megajoule), as measured under transient operating conditions.

(ii) A manufacturer may elect to include any or all of its diesel HDE families in any or all of the NO_X or NO_X plus NMHC ABT programs for HDEs, within the restrictions described in § 86.098–15 as applicable. If the manufacturer elects to include engine families in any of these programs, the NO_X FELs may not exceed 5.0 grams per brake horsepower-hour (1.9 grams per megajoule). This ceiling value applies whether credits for the family are derived from averaging, trading or banking programs.

(4) *Particulate.* (i) For diesel engines to be used in urban buses, 0.05 gram per brake horsepower-hour (0.019 gram per megajoule) for certification testing and selective enforcement audit testing,

and 0.07 gram per brake horsepower-hour (0.026 gram per megajoule) for in-use testing, as measured under transient operating conditions.

(ii) For all other diesel engines only, 0.10 gram per brake horsepower-hour (0.037 gram per megajoule), as measured under transient operating conditions.

(iii) A manufacturer may elect to include any or all of its diesel HDE families in any or all of the particulate ABT programs for HDEs, within the restrictions described in § 86.098–15 as applicable. If the manufacturer elects to include engine families in any of these programs, the particulate FEL may not exceed:

(A) For engine families intended for use in urban buses, 0.25 gram per brake horsepower-hour (0.093 gram per megajoule).

(B) For engine families *not* intended for use in urban buses, 0.60 gram per brake horsepower-hour (0.22 gram per megajoule).

(C) The ceiling values in paragraphs (a)(4)(iii) (A) and (B) of this section apply whether credits for the family are derived from averaging, trading or banking programs.

(b)(1) The opacity of smoke emission from new 1998 and later model year diesel heavy-duty engine shall not exceed:

(i) 20 percent during the engine acceleration mode.

(ii) 15 percent during the engine lugging mode.

(iii) 50 percent during the peaks in either mode.

(2) The standards set forth in paragraph (b)(1) of this section refer to exhaust smoke emissions generated under the conditions set forth in subpart I of this part and measured and calculated in accordance with those procedures.

(3) Evaporative emissions (total of non-oxygenated hydrocarbons plus methanol) from heavy-duty vehicles equipped with methanol-fueled diesel engines shall not exceed the following standards. The standards apply equally to certification and in-use vehicles. The spitback standard also applies to newly assembled vehicles.

(i) For vehicles with a Gross Vehicle Weight Rating of up to 14,000 lbs:

(A)(*1*) For the full three-diurnal test sequence described in § 86.1230–96, diurnal plus hot soak measurements: 3.0 grams per test.

(*2*) For the supplemental two-diurnal test sequence described in § 86.1230–96, diurnal plus hot soak measurements: 3.5 grams per test.

(B) *Running loss test:* 0.05 grams per mile.

(C) *Fuel dispensing spitback test:* 1.0 gram per test.

(ii) For vehicles with a Gross Vehicle Weight Rating of greater than 14,000 lbs:

(A)(*1*) For the full three-diurnal test sequence described in § 86.1230–96, diurnal plus hot soak measurements: 4.0 grams per test.

(*2*) For the supplemental two-diurnal test sequence described in § 86.1230–96, diurnal plus hot soak measurements: 4.5 grams per test.

(B) *Running loss test:* 0.05 grams per mile.

(iii)(A) For vehicles with a Gross Vehicle Weight Rating of up to 26,000 lbs, the standards set forth in paragraph (b)(3) of this section refer to a composite sample of evaporative emissions collected under the conditions and measured in accordance with the procedures set forth in subpart M of this part. For certification vehicles only, manufacturers may conduct testing to quantify a level of nonfuel background emissions for an individual test vehicle. Such a demonstration must include a description of the source(s) of emissions and an estimated decay rate. The demonstrated level of nonfuel background emissions may be subtracted from emission test results from certification vehicles if approved in advance by the Administrator.

(B) For vehicles with a Gross Vehicle Weight Rating of greater than 26,000 lbs., the standards set forth in paragraph (b)(3)(ii) of this section refer to the manufacturer's engineering design evaluation using good engineering practice (a statement of which is required in § 86.091–23(b)(4)(ii)).

(iv) All fuel vapor generated during in-use operations shall be routed exclusively to the evaporative control system (e.g., either canister or engine purge). The only exception to this requirement shall be for emergencies.

(v)(A) At least 90 percent of a manufacturer's sales of 1998 model year heavy-duty vehicles equipped with methanol-fueled diesel engines shall not exceed the standards described in paragraph (b)(3) of this section. The remaining vehicles shall be subject to the standards described in § 86.094–11(b)(3). All 1999 model year and later heavy-duty vehicles equipped with methanol-fueled diesel engines shall not exceed the standards described in paragraph (b)(3) of this section.

(B) Optionally, 90 percent of a manufacturer's combined sales of 1998 model year gasoline- and methanol-fueled light-duty vehicles, light-duty trucks, and heavy-duty vehicles shall not exceed the applicable standards.

(C) Small volume manufacturers, as defined in § 86.092–14(b) (1) and (2), are exempt from the phase-in described in paragraph (b)(3)(v)(A) of this section. For small volume manufacturers, the standards of § 86.094–11(b)(3), and the associated test procedures, apply for the 1998 model year. Beginning in the 1999 model year, 100 percent compliance with the standards of this section is required. This exemption does not apply to small volume engine families as defined in § 86.092–14(b)(5).

(4) *Evaporative emissions* from 1998 and later model year heavy-duty vehicles equipped with natural gas-fueled or liquefied petroleum gas-fueled heavy-duty engines shall not exceed the following standards. The standards apply equally to certification and in-use vehicles.

(i) For vehicles with a Gross Vehicle Weight Rating of up to 14,000 pounds for the full three-diurnal test sequence described in § 86.1230–96, diurnal plus hot soak measurements: 3.0 grams per test.

(ii) For vehicles with a Gross Vehicle Weight Rating of greater than 14,000 pounds for the full three-diurnal test sequence described in § 86.1230–96, diurnal plus hot soak measurements: 4.0 grams per test.

(iii)(A) For vehicles with a Gross Vehicle Weight Rating of up to 26,000 pounds, the standards set forth in paragraph (b)(4) of this section refer to a composite sample of evaporative emissions collected under the conditions set forth in subpart M of this part and measured in accordance with those procedures.

(B) For vehicles with a Gross Vehicle Weight Rating greater than 26,000 lbs, the standards set forth in paragraphs (b)(3)(ii) and (b)(4)(ii) of this section refer to the manufacturer's engineering design evaluation using good engineering practice (a statement of which is required in § 86.091–23(b)(4)(ii)).

(c) No crankcase emissions shall be discharged into the ambient atmosphere from any new 1998 or later model year methanol-, natural gas-, or liquefied petroleum gas-fueled diesel, or any naturally-aspirated diesel heavy-duty engine. For petroleum-fueled engines only, this provision does not apply to engines using turbochargers, pumps, blowers, or superchargers for air induction.

(d) Every manufacturer of new motor vehicle engines subject to the standards prescribed in this section shall, prior to taking any of the actions specified in section 203(a)(1) of the Act, test or cause to be tested motor vehicle engines in accordance with applicable procedures in subpart I or N of this part to ascertain that such test engines meet the requirements of paragraphs (a), (b), (c), and (d) of this section.

[58 FR 15801, Mar. 24, 1993, as amended at 58 FR 34536, June 28, 1993; 59 FR 48502, Sept. 21, 1994; 60 FR 43888, Aug. 23, 1995; 62 FR 54716, Oct. 21, 1997]

§ 86.098–14 Small-volume manufacturers certification procedures.

Section 86.098–14 includes text that specifies requirements that differ from §§ 86.094–14 or 86.095–14. Where a paragraph in § 86.094–14 or § 86.095–14 is identical and applicable to § 86.098–14, this may be indicated by specifying the corresponding paragraph and the statement ''[Reserved]. For guidance see § 86.094–14.'' or ''[Reserved]. For guidance see § 86.095–14.''.

(a) through (c)(7)(i)(C)(*3*) [Reserved]. For guidance see § 86.094–14.

(c)(7)(i)(C)(*4*) For light-duty vehicle, light-duty truck, and heavy-duty vehicle evaporative and/or refueling emissions (as applicable) and for light-duty truck, and heavy-duty engine exhaust emissions, deterioration factors shall be determined in accordance with § 86.098–24.

(c)(7)(ii) through (c)(11)(ii)(B) introductory text [Reserved]. For guidance see §86.094–14.

(c)(11)(ii)(B)(*1*) Engine evaporative/refueling family names and vehicle (or engine) configurations.

(c)(11)(ii)(B)(*2*) through (c)(11)(ii)(B)(*15*) [Reserved]. For guidance see §86.094–14.

(c)(11)(ii)(B)(*16*) through (c)(11)(ii)(B)(*18*) [Reserved]. For guidance see §86.095–14.

(c)(11)(ii)(B)(*19*) For each light-duty vehicle, light-duty truck, or heavy-duty vehicle evaporative/refueling emission family, a description of any unique procedures required to perform evaporative and/or refueling emission tests (as applicable) (including canister working capacity, canister bed volume, and fuel temperature profile for the running loss test) for all vehicles in that evaporative/refueling emission family, and a description of the method used to develop those unique procedures.

(*20*) For each light-duty vehicle, light-duty truck, or heavy-duty vehicle evaporative/refueling emission family:

(*i*) Canister working capacity, according to the procedures specified in §86.132–96(h)(1)(iv);

(*ii*) Canister bed volume; and

(*iii*) Fuel temperature profile for the running loss test, according to the procedures specified in §86.129–94(d).

(c)(11)(ii)(C) through (c)(11)(ii)(D)(*5*) [Reserved]. For guidance see §86.095–14.

(c)(11)(ii)(D)(*6*) [Reserved].

(c)(11)(ii)(D)(*7*) through (c)(15) [Reserved]. For guidance see §86.094–14.

[59 FR 16289, Apr. 6, 1994]

§86.098–15 NO_X and particulate averaging, trading, and banking for heavy-duty engines.

Section 86.098–15 includes text that specifies requirements that differ from §86.094–15. Where a paragraph in §86.094–15 is identical and applicable to §86.098–15, this may be indicated by specifying the corresponding paragraph and the statement ''[Reserved]. For guidance see §86.094–15.''

(a) through (b) [Reserved]. For guidance see §86.094–15.

(c)(1) For each participating engine family, NO_X and particulate emission credits (positive or negative) are to be calculated according to one of the following equations and rounded, in accordance with ASTM E29–93a, to the nearest one-tenth of a Megagram (MG). Consistent units are to be used throughout the equation.

(i) For determining credit need for all engine families and credit availability for engine families generating credits for averaging programs only:

$$\text{Emission credits} = (\text{Std} - \text{FEL}) \times (\text{CF}) \times (\text{UL}) \times (\text{Production}) \times (10^{-6})$$

(ii) For determining credit availability for engine families generating credits for trading or banking programs:

$$\text{Emission credits} = (\text{Std} - \text{FEL}) \times (\text{CF}) \times (\text{UL}) \times (\text{Production}) \times (10^{-6}) \times (\text{Discount})$$

(iii) For purposes of the equations in paragraphs (c)(1)(i) and (ii) of this section:

Std = the current and applicable heavy-duty engine NO_X or particulate emission standard in grams per brake horsepower hour or grams per Megajoule.

FEL = the NO_X or particulate family emission limit for the engine family in grams per brake horsepower hour or grams per Megajoule.

CF = a transient cycle conversion factor in BHP-hr/mi or MJ/mi, as given in paragraph (c)(2) of this section.

UL = the useful life, or alternative life as described in paragraph (f) of §86.094–21, for the given engine family in miles.

Production = the number of engines produced for U.S. sales within the given engine family during the model year. Quarterly production projections are used for initial certification. Actual production is used for end-of-year compliance determination.

Discount = a one-time discount applied to all credits to be banked or traded within the model year generated. The discount applied here is 0.8. Banked credits traded in a subsequent model year will not be subject to an additional discount. Banked credits used in a subsequent model year's averaging program will not have the discount restored.

(2)(i) The transient cycle conversion factor is the total (integrated) cycle brake horsepower-hour or Megajoules, divided by the equivalent mileage of the applicable transient cycle. For Otto-cycle heavy-duty engines, the equivalent mileage is 6.3 miles. For diesel heavy-duty engines, the equivalent mileage is 6.5 miles.

(ii) When more than one configuration is chosen by EPA to be tested in the certification of an engine family (as described in § 86.085–24), the conversion factor used is to be based upon a production weighted average value of the configurations in an engine family to calculate the conversion factor.

(d) through (i) [Reserved]. For guidance see § 86.094–15.

(j) *Optional program for early banking.* Provisions set forth in paragraphs (a) through (i) of this section apply except as specifically stated otherwise in paragraph (j) of this section.

(1) To be eligible for the optional program described in paragraph (j) of this section, the following must apply:

(i) Credits are generated from diesel cycle heavy-duty engines.

(ii) During certification, the manufacturer shall declare its intent to include specific engine families in the program described in this paragraph (j). Separate declarations are required for each program and no engine families may be included in both programs in the same model year.

(2) *Credit generation and use.* (i) Credits shall only be generated by 1998 and later model year engine families.

(ii) Credits may only be used for 2004 and later model year heavy-duty diesel engines. When used with 2004 and later model year engines, NO_X credits may be used to meet the NO_X plus NMHC standard, except as otherwise provided in § 86.004–11(a)(1)(i)(D).

(iii) If a manufacturer chooses to use credits generated under paragraph (j) of this section prior to model year 2004, the averaging, trading, and banking of such credits shall be governed by the program provided in paragraphs (a) through (i) of this section and shall be subject to all discounting, credit life limits and all other provisions contained therein. In the case where the manufacturer can demonstrate that the credits were discounted under the program provided in paragraph (j) of this section, that discount may be accounted for in the calculation of credits described in paragraph (c) of this section.

(3) *Program flexibilities.* (i) NO_X and PM credits that are banked until model year 2004 under this paragraph (j) may be used in 2004 or any model year thereafter without being forfeited due to credit age. This supersedes the requirement in paragraph (f)(2)(i) of this section.

(ii) There are no regional category restraints for averaging, trading, and banking of credits generated under the program described in paragraph (j) of this section. This supersedes the regional category provisions described in the opening text of paragraphs (d) and (e) of this section.

(iii) *Credit discounting.* (A) For NO_X and PM credits generated under this paragraph (j) from engine families with NO_X certification levels greater than 3.5 grams per brake horsepower-hour for oxides of nitrogen, a Discount value of 0.9 shall be used in place of 0.8 in the credit availability equation in paragraph (c)(1) of this section.

(B) For NO_X and PM credits generated under this paragraph (j) from engine families with NOx certification levels less than or equal to 3.5 grams per brake horsepower-hour for oxides of nitrogen, a Discount value of 1.0 shall be used in place of 0.8 in the credit availability equation in paragraph (c)(1) of this section.

(iv) *Credit apportionment.* At the manufacturers option, credits generated under the provisions described in this section may be sold to or otherwise provided to another party for use in programs other than the averaging, trading and banking program described in this section.

(A) The manufacturer shall pre-identify two emission levels per engine family for the purposes of credit apportionment. One emission level shall be the FEL and the other shall be the level of the standard that the engine family is required to certify to under § 86.098–11. For each engine family, the manufacturer may report engine sales in two categories, ''ABT-only credits'' and ''nonmanufacturer-owned credits''.

(*1*) For engine sales reported as ''ABT-only credits'', the credits generated must be used solely in the ABT program described in this section.

(*2*) The engine manufacturer may declare a portion of engine sales ''nonmanufacturer-owned credits'' and this portion of the credits generated between the standard and the FEL, based on the calculation in paragraph (c)(1)

of this section, would belong to another party. For ABT, the manufacturer may not generate any credits for the engine sales reported as ''nonmanufacturer-owned credits''. Engines reported as ''nonmanufacturer-owned credits'' shall comply with the FEL and the requirements of the ABT program in all other respects.

(B) Only manufacturer-owned credits reported as ''ABT-only credits'' shall be used in the averaging, trading, and banking provisions described in this section.

(C) Credits shall not be double-counted. Credits used in the ABT program may not be provided to an engine purchaser for use in another program.

(D) Manufacturers shall determine and state the number of engines sold as ''ABT-only credits'' and ''nonmanufacturer-owned credits'' in the end-of-model year reports required under §86.098–23.

[62 FR 54716, Oct. 21, 1997]

§86.098–17 Emission control diagnostic system for 1998 and later light-duty vehicles and light-duty trucks.

Section 86.098–17 includes text that specifies requirements that differ from §86.094–17. Where a paragraph in §86.094–17 is identical and applicable to §86.098–17, this may be indicated by specifying the corresponding paragraph and the statement ''[Reserved]. For guidance see §86.094–17.''

(a) introductory text through (a)(3) [Reserved]. For guidance see §86.094–17.

(a)(4) Any other deterioration or malfunction within the powertrain which occurs in actual use and which results in an exhaust emission increase of greater than 0.2 g/mi HC, 1.7 g/mi CO, or 0.5 g/mi NO_X, or any vapor leak in the evaporative and/or refueling system which results in an evaporative emissions increase of greater than 30.0 g/test measured over the first 24 hours of the diurnal portion of the revised evaporative emissions test procedure, in accordance with test procedures set forth in subpart B of this part, for vehicles certified to that test procedure.

(b)(1) The electronic evaporative and/or refueling emission purge control, if equipped, and all emission-related powertrain components connected to a computer shall, at a minimum, be monitored for circuit continuity. All components required by these regulations to be monitored shall be evaluated periodically, but no less frequently than once per Urban Dynamometer Driving Schedule as defined in 40 CFR part 86, appendix I, paragraph (a), or similar trip.

(b)(2) through (j) [Reserved]. For guidance see §86.094–17.

[59 FR 16289, Apr. 6, 1994]

§86.098–21 Application for certification.

Section 86.098–21 includes text that specifies requirements that differ from §86.094–21 or §86.096–21. Where a paragraph in §86.094–21 or §86.096–21 is identical and applicable to §86.098–21, this may be indicated by specifying the corresponding paragraph and the statement ''[Reserved]. For guidance see §86.094–21.'' or ''[Reserved]. For guidance see §86.096–21.''.

(a) through (b)(3) [Reserved]. For guidance see §86.094–21.

(b)(4)(i) For light-duty vehicles and light-duty trucks, a description of the test procedures to be used to establish the evaporative emission and/or refueling emission deterioration factors (as applicable) required to be determined and supplied in §86.098–23(b)(2).

(b)(4)(ii) through (iv) [Reserved]. For guidance see §86.094–21.

(b)(5)(v) For light-duty vehicles with non-integrated refueling emission control systems, the number of continuous UDDS cycles, determined from the fuel economy on the UDDS applicable to the test vehicle of that evaporative/refueling emission family-emission control system combination, required to use a volume of fuel equal to 85% of fuel tank volume.

(b)(6) through (8) [Reserved]. For guidance see §86.094–21.

(b)(9) For each light-duty vehicle, light-duty truck, or heavy-duty vehicle evaporative/refueling emission family, a description of any unique procedures required to perform evaporative and/or refueling emission tests (as applicable) (including canister working capacity, canister bed volume, and fuel temperature profile for the running loss test)

for all vehicles in that evaporative/refueling emission family, and a description of the method used to develop those unique procedures.

(10) For each light-duty vehicle, light-duty truck, or heavy-duty vehicle evaporative/refueling emission family:

(i) Canister working capacity, according to the procedures specified in § 86.132–96(h)(1)(iv);

(ii) Canister bed volume; and

(iii) Fuel temperature profile for the running loss test, according to the procedures specified in § 86.129–94(d).

(c) through (j) [Reserved]. For guidance see § 86.094–21.

(k) and (l) [Reserved]. For guidance see § 86.096–21.

[59 FR 16290, Apr. 6, 1994, as amended at 60 FR 34335, June 30, 1995]

§ 86.098–22 Approval of application for certification; test fleet selections; determinations of parameters subject to adjustment for certification and Selective Enforcement Audit, adequacy of limits, and physically adjustable ranges.

Section 86.098–22 includes text that specifies requirements that differ from § 86.094–22. Where a paragraph in § 86.094–22 is identical and applicable to § 86.098–22, this may be indicated by specifying the corresponding paragraph and the statement ''[Reserved]. For guidance see § 86.094–22.''

(a) through (c) [Reserved]. For guidance see § 86.094–22.

(d) Approval of test procedures. (1) The Administrator does not approve the test procedures for establishing the evaporative and/or refueling emission deterioration factors for light-duty vehicles and light-duty trucks. The manufacturer shall submit the procedures as required in § 86.098–21(b)(4)(i) prior to the Administrator's selection of the test fleet under § 86.098–24(b) (1), and if such procedures will involve testing of durability data vehicles selected by the Administrator or elected by the manufacturer under § 86.098–24(c)(1), prior to initiation of such testing.

(d)(2) through (g) [Reserved]. For guidance see § 86.094–22.

[59 FR 16290, Apr. 6, 1994]

§ 86.098–23 Required data.

Section 86.098–23 includes text that specifies requirements that differ from § 86.095–23. Where a paragraph in § 86.095–23 is identical and applicable to § 86.098–23, this may be indicated by specifying the corresponding paragraph and the statement ''[Reserved]. For guidance see § 86.095–23.''

(a) The manufacturer shall perform the tests required by the applicable test procedures and submit to the Administrator the information described in paragraphs (b) through (m) of this section, provided, however, that if requested by the manufacturer, the Administrator may waive any requirement of this section for testing of a vehicle (or engine) for which emission data are available or will be made available under the provisions of § 86.091–29.

(b) *Durability data.* (1)(i) The manufacturer shall submit exhaust emission durability data on such light-duty vehicles tested in accordance with applicable test procedures and in such numbers as specified, which will show the performance of the systems installed on or incorporated in the vehicle for extended mileage, as well as a record of all pertinent maintenance performed on the test vehicles.

(ii) The manufacturer shall submit exhaust emission deterioration factors for light-duty trucks and HDEs and all test data that are derived from the testing described under § 86.094–21(b)(5)(i)(A), as well as a record of all pertinent maintenance. Such testing shall be designed and conducted in accordance with good engineering practice to assure that the engines covered by a certificate issued under § 86.098–30 will meet each emission standard (or family emission limit, as appropriate) in § 86.094–9, § 86.098–10, § 86.098–11 or superseding emissions standards sections as appropriate, in actual use for the useful life applicable to that standard.

(b)(2) For light-duty vehicles and light-duty trucks, the manufacturer shall submit evaporative emission and/or refueling emission deterioration factors for each evaporative/refueling emission family-emission control system combination and all test data that are derived from testing described under § 86.098–21(b)(4)(i) designed and

conducted in accordance with good engineering practice to assure that the vehicles covered by a certificate issued under § 86.098–30 will meet the evaporative and/or refueling emission standards in § 86.098–8 or § 86.098–9, as appropriate, for the useful life of the vehicle.

(3) For heavy-duty vehicles equipped with gasoline-fueled or methanol-fueled engines, the manufacturer shall submit evaporative emission deterioration factors for each evaporative emission family-evaporative emission control system combination identified in accordance with § 86.094–21(b)(4)(ii). Furthermore, a statement that the test procedure(s) used to derive the deterioration factors includes, but need not be limited to, a consideration of the ambient effects of ozone and temperature fluctuations, and the service accumulation effects of vibration, time, and vapor saturation and purge cycling. The deterioration factor test procedure shall be designed and conducted in accordance with good engineering practice to assure that the vehicles covered by a certificate issued under § 86.098–30 will meet the evaporative emission standards in §§ 86.096–10 and 86.098–11 or superseding emissions standards sections as applicable in actual use for the useful life of the engine. Furthermore, a statement that a description of the test procedure, as well as all data, analyses, and evaluations, is available to the Administrator upon request.

(4)(i) For heavy-duty vehicles with a Gross Vehicle Weight Rating of up to 26,000 lbs and equipped with gasoline-fueled or methanol-fueled engines, the manufacturer shall submit a written statement to the Administrator certifying that the manufacturer's vehicles meet the standards of § 86.098–10 or § 86.098–11 or superseding emissions standards sections as applicable as determined by the provisions of § 86.098–28. Furthermore, the manufacturer shall submit a written statement to the Administrator that all data, analyses, test procedures, evaluations, and other documents, on which the requested statement is based, are available to the Administrator upon request.

(ii) For heavy-duty vehicles with a Gross Vehicle Weight Rating of greater than 26,000 lbs and equipped with gasoline-fueled or methanol-fueled engines, the manufacturer shall submit a written statement to the Administrator certifying that the manufacturer's evaporative emission control systems are designed, using good engineering practice, to meet the standards of § 86.096–10 or § 86.098–11 or superseding emissions standards sections as applicable as determined by the provisions of § 86.098–28. Furthermore, the manufacturer shall submit a written statement to the Administrator that all data, analyses, test procedures, evaluations, and other documents, on which the requested statement is based, are available to the Administrator upon request.

(b)(4)(iii) For petroleum-fueled diesel-cycle vehicles certifying under the waiver provisions of § 86.098–28, the certifications and representations specified in § 86.098–28.

(c)(1) [Reserved]. For guidance see § 86.095–23.

(c)(2) Certification engines. (i) The manufacturer shall submit emission data on such engines tested in accordance with applicable emission test procedures of this subpart and in such numbers as specified. These data shall include zero-hour data, if generated, and emission data generated for certification as required under § 86.098–26(c)(4). These data shall also include, where there is a combined standard (e.g., NMHC + NO_x), emissions data for the individual pollutants as well as for the pollutants when combined. In lieu of providing emission data on idle CO emissions or particulate emissions from methanol-fueled diesel-cycle certification engines, or on CO emissions from petroleum-fueled or methanol-fueled diesel certification engines the Administrator may, on request of the manufacturer, allow the manufacturer to demonstrate (on the basis of previous emission tests, development tests, or other information) that the engine will conform with the applicable emission standards of § 86.094–11 or superseding emissions standards sections as applicable. In lieu of providing emission data on smoke emissions from methanol-fueled or petroleum-fueled diesel certification engines, the Administrator may, on the request of the manufacturer, allow the manufacturer

to demonstrate (on the basis of previous emission tests, development tests, or other information) that the engine will conform with the applicable emissions standards of § 86.098–11 or superseding emissions standards sections as applicable, except for engines with a particulate matter certification level exceeding 0.25 grams per brake horsepower-hour. In lieu of providing emissions data on smoke emissions from petroleum-fueled or methanol-fueled diesel engines when conducting Selective Enforcement Audit testing under 40 CFR part 86, subpart K, the Administrator may, on separate request of the manufacturer, allow the manufacturer to demonstrate (on the basis of previous emission tests, development tests, or other information) that the engine will conform with the applicable smoke emissions standards of § 86.098–11 or superseding emissions standards sections as applicable, except for engines with a particulate matter certification level exceeding 0.25 grams per brake horsepower-hour.

(ii) For heavy-duty diesel engines, a manufacturer may submit hot-start data only, in accordance with subpart N of this part, when making application for certification. However, for confirmatory, Selective Enforcement Audit, and recall testing by the Agency, both the cold-start and hot-start test data, as specified in subpart N of this part, will be included in the official results.

(d) The manufacturer shall submit a statement that the vehicles (or engines) for which certification is requested conform to the requirements in § 86.090–5(b), and that the descriptions of tests performed to ascertain compliance with the general standards in § 86.090–5(b), and that the data derived from such tests, are available to the Administrator upon request.

(e)(1) The manufacturer shall submit a statement that the test vehicles (or test engines) for which data are submitted to demonstrate compliance with the applicable standards (or family emission limits, as appropriate) of this subpart are in all material respects as described in the manufacturer's application for certification, that they have been tested in accordance with the applicable test procedures utilizing the fuels and equipment described in the application for certification, and that on the basis of such tests the vehicles (or engines) conform to the requirements of this part. If such statements cannot be made with respect to any vehicle (or engine) tested, the vehicle (or engine) shall be identified, and all pertinent data relating thereto shall be supplied to the Administrator. If, on the basis of the data supplied and any additional data as required by the Administrator, the Administrator determines that the test vehicles (or test engine) were not as described in the application for certification or were not tested in accordance with the applicable test procedures utilizing the fuels and equipment as described in the application for certification, the Administrator may make the determination that the vehicle (or engine) does not meet the applicable standards (or family emission limits, as appropriate). The provisions of § 86.098–30(b) shall then be followed.

(2) For evaporative and refueling emission durability, or light-duty truck or HDE exhaust emission durability, the manufacturer shall submit a statement of compliance with paragraph (b)(1)(ii),(b)(2), (b)(3) or (b)(4) of this section, as applicable.

(3) For certification of vehicles with non-integrated refueling systems, a statement that the drivedown used to purge the refueling canister was the same as described in the manufacturers' application for certification. Furthermore, a description of the procedures used to determine the number of equivalent UDDS miles required to purge the refueling canisters, as determined by the provisions of § 86.098–21(b)(5)(v) and subpart B of this part. Furthermore, a written statement to the Administrator that all data, analyses, test procedures, evaluations and other documents, on which the above statement is based, are available to the Administrator upon request.

(f) through (g) [Reserved]. For guidance see § 86.095–23.

(h) Additionally, manufacturers participating in any of the emissions ABT programs under § 86.098–15 or superseding ABT sections for HDEs shall submit for each participating family the

items listed in paragraphs (h) (1) through (3) of this section.

(1) *Application for certification.* (i) The application for certification will include a statement that the engines for which certification is requested will not, to the best of the manufacturer's belief, when included in any of the ABT programs, cause the applicable emissions standard(s) to be exceeded.

(ii) The application for certification will also include identification of the section of this subpart under which the family is participating in ABT (i.e., § 86.098–15 or superseding ABT sections), the type (NOX, NO_X+NMHC, or particulate) and the projected number of credits generated/needed for this family, the applicable averaging set, the projected U.S. (49-state or 50 state, as applicable) production volumes, by quarter, NCPs in use on a similar family and the values required to calculate credits as given in the applicable ABT section. Manufacturers shall also submit how and where credit surpluses are to be dispersed and how and through what means credit deficits are to be met, as explained in the applicable ABT section. The application must project that each engine family will be in compliance with the applicable emission standards based on the engine mass emissions and credits from averaging, trading and banking.

(2) [Reserved]

(3) *End-of-year report.* The manufacturer shall submit end-of-year reports for each engine family participating in any of the ABT programs, as described in paragraphs (h)(3)(i) through (iv) of this section.

(i) These reports shall be submitted within 90 days of the end of the model year to: Director, Engine Programs and Compliance Division (6405J), U.S. Environmental Protection Agency, 401 M Street, SW., Washington, DC 20460.

(ii) These reports shall indicate the engine family, the averaging set, the actual U.S. (49-state or 50-state, as applicable) production volume, the values required to calculate credits as given in the applicable ABT section, the resulting type and number of credits generated/required, and the NCPs in use on a similar NCP family. Manufacturers shall also submit how and where credit surpluses were dispersed (or are to be banked) and how and through what means credit deficits were met. Copies of contracts related to credit trading must also be included or supplied by the broker if applicable. The report shall also include a calculation of credit balances to show that net mass emissions balances are within those allowed by the emission standards (equal to or greater than a zero credit balance). Any credit discount factor described in the applicable ABT section must be included as required.

(iii) The production counts for end-of-year reports shall be based on the location of the first point of retail sale (e.g., customer, dealer, secondary manufacturer) by the manufacturer.

(iv) Errors discovered by EPA or the manufacturer in the end-of-year report, including changes in the production counts, may be corrected up to 180 days subsequent to submission of the end-of-year report. Errors discovered by EPA after 180 days shall be corrected if credits are reduced. Errors in the manufacturer's favor will not be corrected if discovered after the 180 day correction period allowed.

(i) Failure by a manufacturer participating in the ABT programs to submit any quarterly or end-of-year report (as applicable) in the specified time for all vehicles and engines that are part of an averaging set is a violation of section 203(a)(1) of the Clean Air Act (42 U.S.C. 7522(a)(1)) for each such vehicle and engine.

(j) Failure by a manufacturer generating credits for deposit only in the HDE banking programs to submit their end-of-year reports in the applicable specified time period (i.e., 90 days after the end of the model year) shall result in the credits not being available for use until such reports are received and reviewed by EPA. Use of projected credits pending EPA review will not be permitted in these circumstances.

(k) Engine families certified using NCPs are not required to meet the requirements outlined in paragraphs (f) through (j) of this section.

(l) [Reserved]. For guidance see § 86.095–23.

(m) Additionally, except for small-volume manufacturers, manufacturers certifying vehicles shall submit for

each model year 1998 light-duty vehicle, light-duty truck, and gasoline- and methanol-fueled heavy-duty vehicle evaporative family:

(1) In the application for certification the projected sales volume of evaporative families certifying to the respective evaporative test procedure and accompanying standards as set forth or otherwise referenced in §§ 86.090–8, 86.090–9, 86.091–10 and 86.094–11 or as set forth or otherwise referenced in §§ 86.096–8, 86.096–9, 86.096–10 and 86.098–11 or as set forth or otherwise referenced in superseding emissions standards sections. Volume projected to be produced for U.S. sale may be used in lieu of projected U.S. sales.

(2) End-of-year reports for each evaporative family.

(i) These end-of-year reports shall be submitted within 90 days of the end of the model year to: For heavy-duty engines—Director, Engine Programs and Compliance Divisions (6403J), For vehicles—Director, Vehicle Compliance and Programs Division (6405J), U.S. Environmental Protection Agency, 401 M Street, SW., Washington, DC 20460.

(ii) These reports shall indicate the model year, evaporative family and the actual U.S. sales volume. The manufacturer may petition the Administrator to allow volume produced for U.S. sale to be used in lieu of U.S. sales. Such petition shall be submitted within 30 days of the end of the model year to the Manufacturers Operations Division. For the petition to be granted, the manufacturer must establish to the satisfaction of the Administrator that production volume is functionally equivalent to sales volume.

(iii) The U.S. sales volume for end-of-year reports shall be based on the location of the point of sale to a dealer, distributor, fleet operator, broker, or any other entity that comprises the point of first sale.

(iv) Failure by a manufacturer to submit the end-of-year report within the specified time may result in certificate(s) for the evaporative family(ies) being voided ab initio plus any applicable civil penalties for failure to submit the required information to the Agency.

(v) The information shall be organized in such a way as to allow the Administrator to determine compliance with the Evaporative Emission Testing implementation schedules of §§ 86.096–8, 86.096–9, 86.096–10 and 86.098–11.

[58 FR 16025, Mar. 24, 1993, as amended at 58 FR 34536, June 28, 1993; 59 FR 16290, Apr. 6, 1994; 62 FR 54717, Oct. 21, 1997]

§ 86.098–24 Test vehicles and engines.

Section 86.098–24 includes text that specifies requirements that differ from § 86.096–24. Where a paragraph in § 86.096–24 is identical and applicable to § 86.098–24, this may be indicated by specifying the corresponding paragraph and the statement ''[Reserved]. For guidance see § 86.096–24.''

(a) introductory text through (a)(4) [Reserved]. For guidance see § 86.096–24.

(a)(5) The gasoline-fueled and methanol-fueled light-duty vehicles and light-duty trucks covered by an application for certification will be divided into groupings which are expected to have similar evaporative and/or refueling emission characteristics (as applicable) throughout their useful life. Each group of vehicles with similar evaporative and/or refueling emission characteristics shall be defined as a separate evaporative/refueling emission family.

(a)(6) For gasoline-fueled or methanol-fueled light-duty vehicles and light-duty trucks to be classed in the same evaporative/refueling emission family, vehicles must be similar with respect to the items listed in paragraphs (a)(6) (i) through (xii) of this section.

(i) Type of vapor storage device (e.g., canister, air cleaner, crankcase).

(ii) Basic canister design.

(A) Working capacity—grams adsorption within a 10g. range.

(B) System configuration—number of canisters and method of connection (i.e., series, parallel).

(C) Canister geometry, construction and materials.

(iii) Fuel system.

(iv) Type of refueling emission control system—non-integrated or integrated with the evaporative control system. Further, if the system is non-integrated, whether or not any other evaporative emissions, e.g. diurnal or hot soak emissions, are captured in the

same storage device as the refueling emissions.

(v) Fillpipe seal mechanism—mechanical, liquid trap, other.

(vi) Fill limiter system.

(vii) Vapor control system or method of controlling vapor flow through the vapor line to the canister.

(viii) Vapor/liquid separator usage.

(ix) Purge system (valve, purge strategy and calibrations).

(x) Vapor hose diameter and material.

(xi) Canister location (front, rear, mid-vehicle).

(xii) Onboard diagnostic hardware and calibrations.

(a)(7) Where vehicles are of a type which cannot be divided into evaporative/refueling emission families based on the criteria listed above (such as non-canister control system approaches), the Administrator will establish families for those vehicles based upon the features most related to their evaporative and/or refueling emission characteristics.

(a)(8) through (b)(1)(vi) [Reserved]. For guidance see §86.096–24.

(b)(1)(vii)(A) Vehicles of each evaporative/refueling emission family will be divided into evaporative/refueling emission control systems.

(B) The Administrator will select the vehicle expected to exhibit the highest evaporative and/or refueling emissions, from within each evaporative/refueling family to be certified, from among the vehicles represented by the exhaust emission-data selections for the engine family, unless evaporative and/or refueling testing has already been completed on the vehicle expected to exhibit the highest evaporative and/or refueling emissions for the evaporative/refueling family as part of another engine family's testing.

(C) If the vehicles selected in accordance with paragraph (b)(1)(vii)(B) of this section do not represent each evaporative/refueling emission control system then the Administrator will select the highest expected evaporative/refueling emission vehicle from within the unrepresented evaporative/refueling system.

(viii) For high-altitude evaporative and/or refueling emission compliance for each evaporative/refueling emission family, the manufacturer shall follow one of the following procedures:

(A) The manufacturer will select for testing under high-altitude conditions the one nonexempt vehicle previously selected under paragraph (b)(1)(vii)(B) or (b)(1)(vii)(C) of this section which is expected to have the highest level of evaporative and/or refueling emissions when operated at high altitude; or

(B) [Reserved]. For guidance see §86.096–24.

(b)(ix) through (e)(2) [Reserved]. For guidance see §86.096–24.

(f) *Carryover and carryacross of durability and emission data.* In lieu of testing an emission-data or durability vehicle (or engine) selected under paragraph (b)(1) (vii) through (viii) of this section and §86.096–24 (b)(1) (i) through (vii) and (b)(2) through (c), and submitting data therefor, a manufacturer may, with the prior written approval of the Administrator, submit exhaust emission data, evaporative emission data and/or refueling emission data, as applicable on a similar vehicle (or engine) for which certification has been obtained or for which all applicable data required under §86.098–23 has previously been submitted.

(g) through (h) [Reserved]. For guidance see §86.096–24.

[59 FR 16290, Apr. 6, 1994]

§86.098–25 Maintenance.

Section 86.098–25 includes text that specifies requirements that differ from §86.094–25. Where a paragraph in §86.094–25 is identical and applicable to §86.098–25, this may be indicated by specifying the corresponding paragraph and the statement ''[Reserved]. For guidance see §86.094–25.''

(a)(1) [Reserved]. For guidance see §86.094–25.

(a)(2) Maintenance performed on vehicles, engines, subsystems, or components used to determine exhaust, evaporative or refueling emission deterioration factors is classified as either emission- related or non-emission-related and each of these can be classified as either scheduled or unscheduled. Further, some emission-related maintenance is also classified as critical emission-related maintenance.

(b) introductory text through (b)(3)(vi)(D) [Reserved]. For guidance see § 86.094–25.

(b)(3)(vi)(E) Evaporative and/or refueling emission canister(s).

(F) Turbochargers.

(G) Carburetors.

(H) Superchargers.

(I) EGR System including all related filters and control valves.

(J) Mechanical fillpipe seals.

(b)(3)(vii) through (b)(6)(i)(E) [Reserved]. For guidance see § 86.094–25.

(b)(6)(i)(F) Evaporative and refueling emission control system components (excluding canister air filter).

(b)(6)(i)(G) through (h) [Reserved]. For guidance see § 86.094–25.

[59 FR 16291, Apr. 6, 1994]

§ 86.098–26 Mileage and service accumulation; emission measurements.

Section 86.098–26 includes text that specifies requirements that differ from § 86.094–26, § 86.095–26 or § 86.096–26. Where a paragraph in § 86.094–26, § 86.095–26 or § 86.096–26 is identical and applicable to § 86.098–26, this may be indicated by specifying the corresponding paragraph and the statement ''[Reserved]. For guidance see § 86.094–26.'' or ''[Reserved]. For guidance see § 86.095–26.'' or ''[Reserved]. For guidance see § 86.096–26.''.

(a)(1) and (2) [Reserved]. For guidance see § 86.094–26.

(a)(3) *Emission data vehicles.* Unless otherwise provided for in § 86.098–23(a), emission-data vehicles shall be operated and tested as described in paragraphs (a)(3)(i) and (ii)(C) of this section and § 86.094–26 (a)(3)(ii)(A), (B) and (D).

(i) *Otto-cycle.* (A) The manufacturer shall determine, for each engine family, the mileage at which the engine-system combination is stabilized for emission-data testing. The manufacturer shall maintain, and provide to the Administrator if requested, a record of the rationale used in making this determination. The manufacturer may elect to accumulate 4,000 miles on each test vehicle within an engine family without making a determination. The manufacturer must accumulate a minimum of 2,000 miles (3,219 kilometers) on each test vehicle within an engine family. All test vehicle mileage must be accurately determined, recorded, and reported to the Administrator. Any vehicle used to represent emission-data vehicle selections under § 86.098–24(b)(1) shall be equipped with an engine and emission control system that has accumulated the mileage the manufacturer chose to accumulate on the test vehicle. Fuel economy data generated from certification vehicles selected in accordance with § 86.098–24(b)(1) with engine-system combinations that have accumulated more than 10,000 kilometers (6,200 miles) shall be factored in accordance with 40 CFR 600.006–87(c). Complete exhaust, evaporative and refueling (if required) emission tests shall be conducted for each emission-data vehicle selection under § 86.098–24(b)(1). The Administrator may determine under § 86.094–24(f) that no testing is required.

(B) [Reserved]. For guidance see § 86.094–26.

(C) Exhaust, evaporative and refueling emissions tests for emission-data vehicle(s) selected for testing under § 86.096–24(b)(1) (i), (ii), (iii) or (iv) or § 86.098–24(b)(1)(vii)(B) shall be conducted at the mileage (2,000 mile minimum) at which the engine-system combination is stabilized for emission testing under low-altitude conditions.

(a)(3)(i)(D) through (a)(3)(ii)(B) [Reserved]. For guidance see § 86.094–26.

(a)(3)(ii)(C) Exhaust, evaporative and refueling emissions tests (as required) for emission-data vehicle(s) selected for testing under § 86.096–24(b)(1) (i), (ii), (iii), or (iv), or § 86.098–24 (b)(1)(vii)(B) shall be conducted at the mileage (2,000 mile minimum) at which the engine-system combination is stabilized for emission testing under low-altitude conditions.

(a)(3)(ii)(D) through (b)(4)(i)(C) [Reserved]. For guidance see § 86.094–26.

(b)(4)(i)(D) through (b)(4)(ii)(D) [Reserved]. For guidance see § 86.095–26.

(b)(4)(iii) [Reserved].

(b)(4)(iv) through (c)(3) [Reserved]. For guidance see § 86.094–26.

(c)(4) [Reserved]. For guidance see § 86.096–26.

(d) [Reserved]. For guidance see § 86.094–26.

[59 FR 16291, Apr. 6, 1994, as amended at 60 FR 43888, Aug. 23, 1995]

§86.098–28 Compliance with emission standards.

Section 86.098–28 includes text that specifies requirements that differ from §86.094–28. Where a paragraph in §86.094–28 is identical and applicable to §86.098–28, this may be indicated by specifying the corresponding paragraph and the statement ''[Reserved]. For guidance see §86.094–28.''

(a)(1) Paragraph (a) of this section applies to light-duty vehicles.

(2) Each exhaust, evaporative and refueling emission standard (and family particulate emission limits, as appropriate) of §86.098–8 applies to the emissions of vehicles for the appropriate useful life as defined in §§86.098–2 and 86.098–8.

(3) [Reserved]. For guidance see §86.094–28.

(4) The procedure for determining compliance of a new motor vehicle with exhaust, evaporative and/or refueling emission standards (or family particulate emission limit, as appropriate) is as described in paragraphs (a)(4)(i) introductory text, (a)(4)(i)(C), (a)(4)(ii)(B) and (C), (a)(4)(iii), (a)(4)(v), (f) and (g) of this section and §86.094–28 (a)(4)(i)(A) and (B), (a)(4)(ii)(A), (a)(4)(iv)) except where specified by paragraph (a)(7) of this section for the Production AMA Durability Program.

(i) Separate emission deterioration factors shall be determined from the exhaust emission results of the durability-data vehicle(s) for each engine-system combination. Separate evaporative and/or refueling emission deterioration factors shall be determined for each evaporative/refueling emission family-emission control system combination from the testing conducted by the manufacturer (gasoline-fueled and methanol-fueled vehicles only). Separate refueling emission deterioration factors shall be determined for each evaporative/refueling emission family-emission control system combination from the testing conducted by the manufacturer (petroleum-fueled diesel cycle vehicles not certified under the provisions of paragraph (g) of this section only).

(a)(4)(i)(A) and (a)(4)(i)(B) [Reserved]. For guidance see §86.094–28.

(a)(4)(i)(C) *Evaporative deterioration factor determination.* An evaporative emissions deterioration factor (gasoline-fueled and methanol-fueled vehicles only) shall be determined from the testing conducted as described in §86.094–21(b)(4)(i)(A), and in accordance with paragraphs (a)(4)(i)(C) (*1*) and (*2*) of this section, for each evaporative/refueling emission family-emission control system combination to indicate the evaporative emission level at the applicable useful life relative to the evaporative emission level at 4,000 miles as follows:

(*1*) Factor = Evaporative emission level at the useful life mileage for that standard minus the evaporative emission level at 4,000 miles.

(*2*) The factor shall be established to a minimum of two places to the right of the decimal.

(D) A refueling emissions deterioration factor (gasoline-fueled, methanol-fueled and petroleum-fueled diesel-cycle vehicles not certified under the provisions of paragraph (g) of this section) shall be determined from testing conducted and described in §86.098–21(b)(4)(i)(B) for each evaporative/refueling emission family-emission control system combinationto indicate the refueling emission level at the applicable usefule life relative to the refueling emission level at 4,000 miles as follows:

(*1*) Factor = Refueling emission level at the useful life mileage for that standard minus the refueling emission level at 4,000 miles.

(*2*) The factor shall be established to a minimum of two places to the right of the decimal.

(a)(4)(ii)(A) [Reserved]. For guidance see §86.094–28.

(a)(4)(ii)(B) The official evaporative emission test results (gasoline-fueled and methanol-fueled vehicles only) for each evaporative emission-data vehicle at the selected test point shall be adjusted by addition of the appropriate deterioration factor: *Provided,* that if a deterioration factor as computed in paragraph (a)(4)(i)(C) of this section is less than zero, that deterioration factor shall be zero for the purposes of this paragraph.

(C) The official refueling emission test results (gasoline-fueled, methanol-fueled, and petroleum-fueled diesel cycle vehicles not certified under the

provisions of paragraph (g) of this section) for each refueling emission-data vehicle at the selected test point shall be adjusted by addition of the appropriate deterioration factor: *Provided,* that if a deterioration factor as computed in paragraph (a)(4)(i)(D) of this section is less than zero, that deterioration factor shall be zero for purposes of this paragraph.

(iii) The emissions to compare with the standard (or the family particulate emission limit, as appropriate) shall be the adjusted emissions of paragraphs (a)(4)(ii) (B) and (C) of this section and § 86.094–28 (a)(4)(ii)(A) for each emission-data vehicle. Before any emission value is compared with the standard (or the family particulate emission limit, as appropriate), it shall be rounded, in accordance with ASTM E 29–67, (reapproved 1980) (as referenced in § 86.094–28(a)(4)(i)(B)(*2*)(*ii*)), to two significant figures. The rounded emission values may not exceed the standard (or the family particulate emission limit, as appropriate).

(iv) [Reserved]. For guidance see § 86.094–28.

(v) Every test vehicle of an evaporative/refueling emission family must comply with the evaporative and/or refueling emission standards, as determined in paragraph (a)(4)(iii) of this section, before any vehicle in that family may be certified.

(a)(5) through (a)(6) [Reserved]. For guidance see § 86.094–28.

(a)(7) The procedure to determine the compliance of new motor vehicles in the Production AMA Durability Program described in § 86.094–13 is the same as described in paragraphs (a)(4)(iii) and (v) of this section and § 86.094–28 (a)(4)(iv). For the engine families that are included in the Production AMA Durability Program, the exhaust emission deterioration factors used to determine compliance shall be those that the Administrator has approved under § 86.094–13. The evaporative emission deterioration factor for each evaporative /refueling emission family shall be determined and applied according to paragraph (a)(4)(ii)(B) of this section. The refueling emission deterioration factor for each evaporative/refueling emission family shall be determined and applied according to paragraph (a)(4)(ii)(C) of this section. The procedures to determine the minimum exhaust emission deterioration factors required under § 86.094–13(d) are as described in paragraph (a)(7)(i) of this section and § 86.094–28 (a)(7)(ii).

(i) Separate deterioration factors shall be determined from the exhaust emission results of the durability data vehicles for each emission standard applicable under § 86.098–8, for each engine family group. The evaporative and/or refueling emission deterioration factors for each evaporative/refueling family will be determined and applied in accordance with paragraph (a)(4) of this section.

(a)(7)(ii) through (d) [Reserved]. For guidance see § 86.094–28.

(e) [Reserved]

(f) *Fuel dispensing spitback testing waiver.* (1) Vehicles certified to the refueling emission standards set forth in § 86.098–8 are not required to demonstrate compliance with the fuel dispensing spitback standard contained in that section: *Provided,* that—

(i) The manufacturer certifies that the vehicle inherently meets the Dispensing Spitback Standard as part of compliance with the refueling emission standard; and

(ii) This certification is provided in writing and applies to the full useful life of the vehicle.

(2) EPA retains the authority to require testing to enforce compliance and to prevent non-compliance with the Fuel Dispensing Spitback Standard.

(g) *Inherently low refueling emission testing waiver.* (1) Vehicles using fuels/fuel systems inherently low in refueling emissions are not required to conduct testing to demonstrate compliance with the refueling emission standards set forth in § 86.098–8: *Provided,* that—

(i) This provision is only available for petroleum diesel fuel. It is only available if the Reid Vapor Pressure of in-use diesel fuel is equal to or less than 1 psi (7 kPa) and for diesel vehicles whose fuel tank temperatures do not exceed 130 °F (54 °C); and

(ii) To certify using this provision the manufacturer must attest to the following evaluation: ''Due to the low

vapor pressure of diesel fuel and the vehicle tank temperatures, hydrocarbon vapor concentrations are low and the vehicle meets the 0.20 grams/gallon refueling emission standard without a control system.''

(2) The certification required in paragraph (g)(1)(ii) of this section must be provided in writing and must apply for the full useful life of the vehicle.

(3) EPA reserves the authority to require testing to enforce compliance and to prevent noncompliance with the refueling emission standard.

(4) Vehicles certified to the refueling emission standard under this provision shall not be counted in the sales percentage compliance determinations for the 1988, 1989 and subsequent model years.

(h) *Fixed liquid level gauge waiver.* Liquefied petroleum gas-fueled vehicles which contain fixed liquid level gauges or other gauges or valves which can be opened to release fuel or fuel vapor during refueling, and which are being tested for refueling emissions, are not required to be tested with such gauges or valves open, as outlined in §86.157–98(d)(2), provided the manufacturer can demonstrate, to the satisfaction of the Administrator, that such gauges or valves would not be opened during refueling in-use due to inaccessibility or other design features that would prevent or make it very unlikely that such gauges or valves could be opened.

[59 FR 16292, Apr. 6, 1994, as amended at 59 FR 48503, Sept. 21, 1994]

§86.098–30 Certification.

Section 86.098–30 includes text that specifies requirements that differ from §86.094–30, §86.095–30 or §86.096–30. Where a paragraph in §86.094–30, §86.095–30 or §86.096–30 is identical and applicable to §86.098–30. This may be indicated by specifying the corresponding paragraph and the statement ''[Reserved]. For guidance see §86.094–30.'' or ''[Reserved]. For guidance see §86.095–30.'' or ''[Reserved]. For guidance see §86.096–30.''.

(a)(1) and (a)(2) [Reserved]. For guidance see §86.094–30.

(a)(3)(i) One such certificate will be issued for each engine family. For gasoline-fueled and methanol-fueled light-duty vehicles and light duty-trucks and petroleum-fueled diesel-cycle light-duty vehicles and light duty-trucks not certified under §86.098–28(g), one such certificate will be issued for each engine family-evaporative/refueling emission family combination. Each certificate will certify compliance with no more than one set of in-use and certification standards (or family emission limits, as appropriate).

(a)(3)(ii) through (a)(4)(ii) [Reserved]. For guidance see §86.095–30.

(a)(4)(iii) introductory text through (a)(4)(iii)(C) [Reserved]. For guidance see §86.094–30.

(a)(4)(iv) introductory text [Reserved]. For guidance see §86.095–30.

(a)(4)(iv)(A) through (a)(9) [Reserved]. For guidance see §86.094–30.

(a)(10)(i) For diesel-cycle light-duty vehicle and diesel-cycle light-duty truck families which are included in a particulate averaging program, the manufacturer's production-weighted average of the particulate emission limits of all engine families in a participating class or classes shall not exceed the applicable diesel-cycle particulate standard, or the composite particulate standard defined in §86.090–2 as appropriate, at the end of the model year, as determined in accordance with this part. The certificate shall be void ab initio for those vehicles causing the production-weighted FEL to exceed the particulate standard.

(ii) For all heavy-duty diesel-cycle engines which are included in the particulate ABT programs under §§86.094–15, 86.098–15, or superseding ABT sections, the provisions of paragraphs (a)(10)(ii) (A) through (C) of this section apply.

(A) All certificates issued are conditional upon the manufacturer complying with all applicable ABT provisions and the ABT related provisions of other applicable sections, both during and after the model year production.

(B) Failure to comply with all applicable ABT provisions will be considered to be a failure to satisfy the conditions upon which the certificate was issued, and the certificate may be deemed void ab initio.

(C) The manufacturer shall bear the burden of establishing to the satisfaction of the Administrator that the conditions upon which the certificate was issued were satisfied or excused.

(11)(i) For light-duty truck families which are included in a NO_X averaging program, the manufacturer's production-weighted average of the NO_X emission limits of all such engine families shall not exceed the applicable NO_X emission standard, or the composite NO_X emission standard defined in § 86.088–2, as appropriate, at the end of the model year, as determined in accordance with this part. The certificate shall be void ab initio for those vehicles causing the production-weighted FEL to exceed the NO_X standard.

(ii) For all HDEs which are included in the NO_X or NO_X plus NMHC ABT programs under § 86.098–15 or superseding ABT sections, the provisions of paragraphs (a)(11)(ii) (A) through (C) of this section apply.

(A) All certificates issued are conditional upon the manufacturer complying with all applicable ABT provisions and the ABT related provisions of other applicable sections, both during and after the model year production.

(B) Failure to comply with all applicable ABT provisions will be considered to be a failure to satisfy the conditions upon which the certificate was issued, and the certificate may be deemed void ab initio.

(C) The manufacturer shall bear the burden of establishing to the satisfaction of the Administrator that the conditions upon which the certificate was issued were satisfied or excused.

(a)(12) [Reserved]. For guidance see § 86.094–30.

(a)(13) [Reserved]. For guidance see § 86.095–30.

(a)(14) [Reserved]. For guidance see § 86.094–30.

(a)(15) through (18) [Reserved]. For guidance see § 86.096–30.

(a)(19) For all light-duty vehicles certified to refueling emission standards under § 86.098–8, the provisions of paragraphs (a)(19) (i) through (iii) of this section apply.

(i) All certificates issued are conditional upon the manufacturer complying with all provisions of § 86.098–8, both during and after model year production.

(ii) Failure to meet the required implementation schedule sales percentages as specified in § 86.094–8 be considered to be a failure to satisfy the conditions upon which the certificate(s) was issued and the vehicles sold in violation of the implementation schedule shall not be covered by the certificate.

(iii) The manufacturer shall bear the burden of establishing to the satisfaction of the Administrator that the conditions upon which the certificate was issued were satisfied.

(b)(1) introductory text through (b)(1)(i)(B) [Reserved]. For guidance see § 86.094–30.

(b)(1)(i)(C) The emission-data vehicle(s) selected under § 86.098–24(b)(1)(vii) (A) and (B) shall represent all vehicles of the same evaporative/refueling control system within the evaporative /refueling family.

(b)(1)(ii) through (b)(1)(iv) [Reserved]. For guidance see § 86.094–30.

(b)(2) The Administrator will proceed as in paragraph (a) of this section with respect to the vehicles (or engines) belonging to an engine family or engine family-evaporative/refueling emission family combination (as applicable), all of which comply with all applicable standards (or family emission limits, as appropriate).

(b)(3) through (b)(4)(i) [Reserved]. For guidance see § 86.094–30.

(b)(4)(ii) Remove the vehicle configuration (or evaporative/refueling vehicle configuration, as applicable) which failed, from his application:

(b)(4)(ii)(A) [Reserved]. For guidance see § 86.094–30.

(b)(4)(ii)(B) If the failed vehicle was tested for compliance with one or more of the exhaust, evaporative and refueling emission standards: The Administrator may select, in place of the failed vehicle, in accordance with the selection criteria employed in selecting the failed vehicle, a new emission data vehicle which will be tested for compliance with all of the applicable emission standards. If one vehicle cannot be selected in accordance with the selection criteria employed in selecting the failed vehicle, then two or more vehicles may be selected (e.g., one vehicle to satisfy the exhaust emission vehicle

selection criteria and one vehicle to satisfy the evaporative and refueling emission vehicle selection criteria). The vehicle selected to satisfy the exhaust emission vehicle selection criteria will be tested for compliance with exhaust emission standards (or family emission limits, as appropriate) only. The vehicle selected to satisfy the evaporative and/or refueling emission vehicle selection criteria will be tested for compliance with exhaust, evaporative and/or refueling emission standards; or

(iii) Remove the vehicle configuration (or evaporative/refueling vehicle configuration, as applicable) which failed from the application and add a vehicle configuration(s) (or evaporative/refueling vehicle configuration(s), as applicable) not previously listed. The Administrator may require, if applicable, that the failed vehicle be modified to the new engine code (or evaporative/refueling emission code, as applicable) and demonstrate by testing that it meets applicable standards (or family emission limits, as appropriate) for which it was originally tested. In addition, the Administrator may select, in accordance with the vehicle selection criteria given in §86.001–24(b), a new emission data vehicle or vehicles. The vehicles selected to satisfy the exhaust emission vehicle selection criteria will be tested for compliance with exhaust emission standards (or family emission limits, as appropriate) only. The vehicles selected to satisfy the evaporative emission vehicle selection criteria will be tested for compliance with all of the applicable emission standards (or family emission limits, as appropriate); or

(iv) Correct a component or system malfunction and show that with a correctly functioning system or component the failed vehicle meets applicable standards (or family emission limits, as appropriate) for which it was originally tested. The Administrator may require a new emission data vehicle, of identical vehicle configuration (or evaporative/refueling vehicle configuration, as applicable) to the failed vehicle, to be operated and tested for compliance with the applicable standards (or family emission limits, as appropriate) for which the failed vehicle was originally tested.

(b)(5) through (e) [Reserved]. For guidance see §86.094–30.

(f) introductory text through (f)(3) [Reserved]. For guidance see §86.095–30.

(f)(4) The electronic evaporative and/or refueling purge control device (if equipped) or any emission-related powertrain component connected to a computer is electrically disconnected.

[59 FR 16293, Apr. 6, 1994, as amended at 62 FR 54719, Oct. 21, 1997]

§86.098–35 Labeling.

Section 86.098–35 includes text that specifies requirements that differ from §§86.095–35 and 86.096–35. Where a paragraph in §86.095–35 or §86.096–35 is identical and applicable to §86.098–35, this may be indicated by specifying the corresponding paragraph and the statement ''[Reserved]. For guidance see §86.095–35.'' or ''[Reserved]. For guidance see §86.096–35.''.

(a) introductory text through (a)(1)(iii)(B) [Reserved]. For guidance see §86.095–35.

(a)(1)(iii)(C) Engine displacement (in cubic inches or liters), engine family identification and evaporative/refueling family identification.

(a)(1)(iii)(D) through (L) [Reserved]. For guidance see §86.095–35.

(a)(1)(iii)(M) For model year 1998 light-duty vehicles, a clear indication of which test procedure was used to certify the evaporative/refueling family, e.g., ''Evaporative /refueling Family xx (§86.130–96 procedures)'' or ''Evaporative /refueling Family xx (§86.130–78 procedures).''

(a)(1)(iii)(N) [Reserved]. For guidance see §86.096–35.

(a)(2) heading through (a)(2)(iii)(K) [Reserved]. For guidance see §86.095–35.

(a)(2)(iii)(L) [Reserved]

(a)(2)(iii)(M) through (a)(2)(iii)(N) [Reserved]. For guidance see §86.095–35.

(a)(2)(iii)(O) through (a)(2)(iii)(P) [Reserved]. For guidance see §86.096–35.

(a)(3) heading through (a)(4)(iii)(F) [Reserved]. For guidance see §86.095–35.

(a)(4)(iii)(G) [Reserved]. For guidance see §86.096–35.

(b) through (i) [Reserved]. For guidance see §86.095–35.

[59 FR 16294, Apr. 6, 1994]

§ 86.099–1 General applicability.

Section 86.099–1 includes text that specifies requirements that differ from those specified in § 86.094–1. Where a paragraph in § 86.094–1 is identical and applicable to § 86.099–1, this may be indicated by specifying the corresponding paragraph and the statement ''[Reserved]. For guidance see § 86.094–1.''.

(a) through (b) [Reserved]. For guidance see § 86.094–1.

(c) *National Low Emission Vehicle Program for light-duty vehicles and light light-duty trucks.* A manufacturer may elect to certify 1999 and later model year light-duty vehicles and light light-duty trucks to the provisions of the National Low Emission Vehicle Program contained in subpart R of this part. Subpart R of this part is applicable only to those manufacturers that opt into the National Low Emission Vehicle Program, under the provisions of that subpart, and that have not exercised a valid opt-out from the National Low Emission Vehicle Program, which opt-out has gone into effect under the provisions of § 86.1707. All provisions of this subpart are applicable to vehicles certified pursuant to subpart R of this part, except as specifically noted in subpart R of this part.

(d) [Reserved]

(e) through (f) [Reserved]. For guidance see § 86.094–1.

[63 FR 965, Jan. 7, 1998]

§ 86.099–8 Emission standards for 1999 and later model year light-duty vehicles.

Section 86.099–8 includes text that specifies requirements that differ from § 86.096–8. Where a paragraph in § 86.096–8 is identical and applicable to § 86.099–8, this may be indicated by specifying the corresponding paragraph and the statement ''[Reserved]. For guidance see § 86.096–8.''

(a)(1) through (a)(1)(ii)(B) [Reserved]. For guidance see § 86.096–8.

(iii) CST emissions from gasoline-fueled Otto-cycle light-duty vehicles measured and calculated in accordance with subpart O of this part may not exceed the standards listed in paragraphs (a)(1)(iii) (A) and (B) of this section.

(A) Hydrocarbons: 100 ppm as hexane.

(B) Carbon monoxide: 0.5%.

(2) [Reserved]

(3) The standards set forth in paragraph (a)(1)(iii) of this section refer to the exhaust emitted during the CST as set forth in subpart O of this part and measured and calculated in accordance with those provisions.

(b) Evaporative emissions from light-duty vehicles shall not exceed the following standards. The standards apply equally to certification and in-use vehicles. The spitback standard also applies to newly assembled vehicles. For certification vehicles only, manufacturers may conduct testing to quantify a level of nonfuel background emissions for an individual test vehicle. Such a demonstration must include a description of the source(s) of emissions and an estimated decay rate. The demonstrated level of nonfuel background emissions may be subtracted from emission test results from certification vehicles if approved in advance by the Administrator.

(1) *Hydrocarbons (for gasoline-fueled, natural gas-fueled, and liquefied petroleum gas-fueled vehicles).* (i)(A) For the full three-diurnal test sequence described in § 86.130–96, diurnal plus hot soak measurements: 2.0 grams per test.

(B) *For the supplemental two-diurnal test sequence described in § 86.130–96, diurnal plus hot soak emissions (gasoline-fueled vehicles only): 2.5 grams per test.*

(ii) *Running loss test (gasoline-fueled vehicles only):* 0.05 grams per mile.

(iii) *Fuel dispensing spitback test (gasoline-fueled vehicles only):* 1.0 grams per test.

(2) *Total Hydrocarbon Equivalent (for methanol-fueled vehicles).* (i)(A) For the full three-diurnal test sequence described in § 86.130–96, diurnal plus hot soak measurements: 2.0 grams carbon per test.

(B) For the supplemental two-diurnal test sequence described in § 86.130–96, diurnal plus hot soak measurements: 2.5 grams carbon per test.

(ii) Running loss test: 0.05 grams carbon per mile.

(iii) Fuel dispensing spitback test: 1.0 gram carbon per test.

(3) The standards set forth in paragraphs (b) (1) and (2) of this section refer to a composite sample of evaporative emissions collected under the conditions and measured in accordance

with the procedures set forth in subpart B of this part.

(4) All fuel vapor generated in a gasoline- or methanol-fueled light-duty vehicle during in-use operations shall be routed exclusively to the evaporative control system (e.g., either canister or engine purge). The only exception to this requirement shall be for emergencies.

(5) [Reserved]. For guidance see § 86.096–8.

(6) Vehicles certified to the refueling standards set forth in paragraph (d) of this section are not required to demonstrate compliance with the Fuel Dispensing Spitback standards contained in paragraphs (b)(1)(iii) and (b)(2)(iii) of this section: *Provided*, that they meet the requirements of § 86.098–28(f).

(c) [Reserved]. For guidance see § 86.096–8.

(d) Refueling emissions from 1999 and later model year gasoline-fueled and methanol-fueled Otto-cycle and petroleum-fueled and methanol-fueled diesel-cycle light duty vehicles shall not exceed the following standards. The standards apply equally to certification and in-use vehicles.

(1) *Standards*—(i) *Hydrocarbons (for gasoline-fueled Otto* gallon (0.053 gram per liter) of fuel dispensed.

(ii) *Total Hydrocarbon Equivalent (for methanol-fueled vehicles).* 0.20 gram per gallon (0.053 gram per liter) of fuel dispensed.

(iii) *Hydrocarbons (for liquefied petroleum gas-fueled vehicles).* 0.15 gram per gallon (0.04 gram per liter) of fuel dispensed.

(iv) *Refueling receptacle (for natural gas-fueled vehicles).* Refueling receptacles on natural gas-fueled vehicles shall comply with the receptacle provisions of the ANSI/AGA NGV1–1994 standard (as incorporated by reference in § 86.1).

(2)(i) The standards set forth in paragraphs (d)(1)(i) and (ii) of this section refer to a sample of refueling emissions collected under the conditions set forth in subpart B of this part and measured in accordance with those procedures.

(ii) For vehicles powered by petroleum-fueled diesel-cycle engines, the provisions set forth in paragraph (d)(1)(i) of this section may be waived: *Provided*, that the manufacturer complies with the provisions of § 86.098–28(f) of this subpart.

(3)(i) A minimum of the percentage shown in table A99–08 of a manufacturer's sales of the applicable model year's gasoline- and methanol-fueled Otto-cycle and petroleum- and methanol-fueled diesel cycle light-duty vehicles shall be tested under the procedures in subpart B of this part indicated for 1998 and later model years, and shall not exceed the standards described in paragraph (d)(1) of this section. Vehicles certified in accordance with paragraph (d)(2)(ii) of this section, as determined by the provisions of § 86.098–28(g), shall not be counted in the calculation of the percentage of compliance.

TABLE A99–08—IMPLEMENTATION SCHEDULE FOR LIGHT-DUTY VEHICLE REFUELING EMISSION TESTING

Model year	Sales percentage
1999	80
2000 and subsequent	100

(ii) Small volume manufacturers, as defined in § 86.094–14(b) (1) and (2), are exempt from the implementation schedule of table A99–08 of this section for model year 1999. For small volume manufacturers, the standards of paragraph (d) of this section, and the associated test procedures, shall not apply until model year 2000, when 100 percent compliance with the standards of this section is required. This exemption does not apply to small volume engine families as defined in § 86.094–14(b)(5).

(e) through (f) [Reserved]

(g) through (k) [Reserved]. For guidance see § 86.096–8.

[58 FR 16025, Mar. 24, 1993, as amended at 58 FR 58421, Nov. 1, 1993; 58 FR 16294, Apr. 6, 1994; 59 FR 48503, Sept. 21, 1994; 60 FR 43888, Aug. 23, 1995]

§ 86.099–9 Emission standards for 1999 and later model year light-duty trucks.

Section 86.099–9 includes text that specifies requirements that differ from § 86.097–9. Where a paragraph in § 86.097–9 is identical and applicable to § 86.099–9, this may be indicated by specifying the corresponding paragraph and the statement ''[Reserved]. For guidance see § 86.097–9.'' Where a corresponding

paragraph of § 86.097–9 is not applicable, this is indicated by the statement ''[Reserved].''

(a)(1) through (a)(1)(iii)(2) [Reserved]. For guidance see § 86.097–9.

(iv) CST emissions from gasoline-fueled Otto-cycle light-duty trucks measured and calculated in accordance with subpart O of this part may not exceed the standards listed in paragraphs (a)(1)(iv) (A) and (B) of this section.

(A) Hydrocarbons: 100 ppm as hexane.

(B) Carbon monoxide: 0.5%.

(2) [Reserved]

(3) The standards set forth in paragraph (a)(1)(iv) of this section refer to the exhaust emitted during the CST as set forth in subpart O of this part and measured and calculated in accordance with those provisions.

(b) Evaporative emissions from light-duty trucks shall not exceed the following standards. The standards apply equally to certification and in-use vehicles. The spitback standard also applies to newly assembled vehicles. For certification vehicles only, manufacturers may conduct testing to quantify a level of nonfuel background emissions for an individual test vehicle. Such a demonstration must include a description of the source(s) of emissions and an estimated decay rate. The demonstrated level of nonfuel background emissions may be subtracted from emission test results from certification vehicles if approved in advance by the Administrator.

(1) *Hydrocarbons (for gasoline-fueled, natural gas-fueled, and liquefied petroleum gas-fueled vehicles).* (i)(A) For gasoline-fueled heavy light-duty trucks with a nominal fuel tank capacity of at least 30 gallons:

(*1*) For the full three-diurnal test sequence described in § 86.130–96, diurnal plus hot soak measurements: 2.5 grams per test.

(*2*) For the supplemental two-diurnal test sequence described in § 86.130–96, diurnal plus hot soak measurements: 3.0 grams per test.

(B) For all other light-duty trucks:

(*1*) For the full three-diurnal test sequence described in § 86.130–96, diurnal plus hot soak measurements: 2.0 grams per test.

(*2*) For the supplemental two-diurnal test sequence described in § 86.130–96, diurnal plus hot soak measurements (gasoline-fueled vehicles only): 2.5 grams per test.

(ii) *Running loss test (gasoline-fueled vehicles only):* 0.05 grams per mile.

(iii) *Fuel dispensing spitback test (gasoline-fueled vehicles only):* 1.0 grams per test.

(2) *Total Hydrocarbon Equivalent (for methanol-fueled vehicles).* (i)(A) For heavy light-duty trucks with nominal fuel tank capacity of at least 30 gallons:

(*1*) For the full three-diurnal test sequence described in § 86.130–96, diurnal plus hot soak measurements: 2.5 grams carbon per test.

(*2*) For the supplemental two-diurnal test sequence described in § 86.130–96, diurnal plus hot soak measurements: 3.0 grams carbon per test.

(B) For all other light-duty trucks:

(*1*) For the full three-diurnal test sequence described in § 86.130–96, diurnal plus hot soak measurements: 2.0 grams carbon per test.

(*2*) For the supplemental two-diurnal test sequence described in § 86.130–96, diurnal plus hot soak measurements: 2.5 grams carbon per test.

(ii) Running loss test: 0.05 grams carbon per mile.

(iii) Fuel dispensing spitback test: 1.0 gram carbon per test.

(3) The standards set forth in paragraphs (b) (1) and (2) of this section refer to a composite sample of evaporative emissions collected under the conditions and measured in accordance with the procedures set forth in subpart B of this part.

(4) All fuel vapor generated in a gasoline- or methanol-fueled light-duty truck during in-use operations shall be routed exclusively to the evaporative control system (e.g., either canister or engine purge). The only exception to this requirement shall be for emergencies.

(c) [Reserved]. For guidance see § 86.097–9.

(d) through (f) [Reserved].

(g) through (k) [Reserved]. For guidance see § 86.097–9.

[58 FR 16025, Mar. 24, 1993, as amended at 58 FR 58422, Nov. 1, 1993; 59 FR 48503, Sept. 21, 1994; 60 FR 43888, Aug. 23, 1995]

§86.099–10 Emission standards for 1999 and later model year Otto-cycle heavy-duty engines and vehicles.

Section 86.099–10 includes text that specifies requirements that differ from §86.098–10. Where a paragraph in §86.98–10 is identical and applicable to §86.099–10, this may be indicated by specifying the corresponding paragraph and the statement ''[Reserved]. For guidance see §86.098–10.''

(a) [Reserved]. For guidance see §86.098–10.

(b) Evaporative emissions from heavy-duty vehicles shall not exceed the following standards. The standards apply equally to certification and in-use vehicles. The spitback standard also applies to newly assembled vehicles. For certification vehicles only, manufacturers may conduct testing to quantify a level of nonfuel background emissions for an individual test vehicle. Such a demonstration must include a description of the source(s) of emissions and an estimated decay rate. The demonstrated level of nonfuel background emissions may be subtracted from emission test results from certification vehicles if approved in advance by the Administrator.

(1) *Hydrocarbons (for vehicles equipped with gasoline-fueled, natural gas-fueled or liquefied petroleum gas-fueled engines).* (i) For vehicles with a Gross Vehicle Weight Rating of up to 14,000 lbs:

(A)(*1*) For the full three-diurnal test sequence described in §86.1230–96, diurnal plus hot soak measurements: 3.0 grams per test.

(*2*) For the supplemental two-diurnal test sequence described in §86.1230–96, diurnal plus hot soak measurements (gasoline-fueled vehicles only): 3.5 grams per test.

(B) Running loss test (gasoline-fueled vehicles only): 0.05 grams per mile.

(C) Fuel dispensing spitback test (gasoline-fueled vehicles only): 1.0 gram per test.

(ii) For vehicles with a Gross Vehicle Weight Rating of greater than 14,000 lbs:

(A)(*1*) For the full three-diurnal test sequence described in §86.1230–96, diurnal plus hot soak measurements: 4.0 grams per test.

(*2*) For the supplemental two-diurnal test sequence described in §86.1230–96, diurnal plus hot soak measurements (gasoline-fueled vehicles only): 4.5 grams per test.

(B) Running loss test (gasoline-fueled vehicles only): 0.05 grams per mile.

(2) *Total Hydrocarbon Equivalent (for vehicles equipped with methanol-fueled engines).* (i) For vehicles with a Gross Vehicle Weight Rating of up to 14,000 lbs:

(A)(*1*) For the full three-diurnal test sequence described in §86.1230–96, diurnal plus hot soak measurements: 3.0 grams carbon per test.

(*2*) For the supplemental two-diurnal test sequence described in §86.1230–96, diurnal plus hot soak measurements: 3.5 grams carbon per test.

(B) Running loss test: 0.05 grams carbon per mile.

(C) Fuel dispensing spitback test: 1.0 gram carbon per test.

(ii) For vehicles with a Gross Vehicle Weight Rating of greater than 14,000 lbs:

(A)(*1*) For the full three-diurnal test sequence described in §86.1230–96, diurnal plus hot soak measurements: 4.0 grams carbon per test.

(*2*) For the supplemental two-diurnal test sequence described in §86.1230–96, diurnal plus hot soak measurements: 4.5 grams carbon per test.

(B) Running loss test: 0.05 grams carbon per mile.

(3)(i) For vehicles with a Gross Vehicle Weight Rating of up to 26,000 lbs, the standards set forth in paragraphs (b)(1) and (b)(2) of this section refer to a composite sample of evaporative emissions collected under the conditions and measured in accordance with the procedures set forth in subpart M of this part.

(ii) For vehicles with a Gross Vehicle Weight Rating of greater than 26,000 lbs., the standards set forth in paragraphs (b)(1)(ii) and (b)(2)(ii) of this section refer to the manufacturer's engineering design evaluation using good engineering practice (a statement of which is required in §86.091–23(b)(4)(ii)).

(4) All fuel vapor generated in a gasoline- or methanol-fueled heavy-duty vehicle during in-use operations shall be routed exclusively to the evaporative control system (e.g., either

canister or engine purge). The only exception to this requirement shall be for emergencies.

(c) and (d) [Reserved]. For guidance see § 86.098–10.

[58 FR 16026, Mar. 24, 1993, as amended at 59 FR 48503, Sept. 21, 1994; 60 FR 43888, Aug. 23, 1995]

§ 86.099–11 Emission standards for 1999 and later model year diesel heavy-duty engines and vehicles.

(a) Exhaust emissions from new 1999 and later model year diesel heavy-duty engines shall not exceed the following:

(1)(i) *Hydrocarbons (for diesel engines fueled with either petroleum-fuel or liquefied petroleum gas).* 1.3 grams per brake horsepower-hour (0.48 gram per megajoule), as measured under transient operating conditions.

(ii) *Total Hydrocarbon Equivalent (for methanol-fueled diesel engines).* 1.3 grams per brake horsepower-hour (0.48 gram per megajoule), as measured under transient operating conditions.

(iii) *Nonmethane hydrocarbons (for natural gas-fueled diesel engines).* 1.2 grams per brake horsepower-hour (0.45 gram per megajoule), as measured under transient operating conditions.

(2) *Carbon monoxide.* (i) 15.5 grams per brake horsepower-hour (5.77 grams per megajoule), as measured under transient operating conditions.

(ii) 0.50 percent of exhaust gas flow at curb idle (methanol-, natural gas-, and liquefied petroleum gas-fueled diesel only).

(3) *Oxides of Nitrogen.* (i) 4.0 grams per brake horsepower-hour (1.49 grams per megajoule), as measured under transient operating conditions.

(ii) A manufacturer may elect to include any or all of its diesel HDE families in any or all of the NO_X or NO_X plus NMHC ABT programs for HDEs, within the restrictions described in § 86.098–15 as applicable. If the manufacturer elects to include engine families in any of these programs, the NO_X FELs may not exceed 5.0 grams per brake horsepower-hour (1.9 grams per megajoule). This ceiling value applies whether credits for the family are derived from averaging, trading or banking programs.

(4) *Particulate.* (i) For diesel engines to be used in urban buses, 0.05 gram per brake horsepower-hour (0.019 gram per megajoule) for certification testing and selective enforcement audit testing, and 0.07 gram per brake horsepower-hour (0.026 gram per megajoule) for in-use testing, as measured under transient operating conditions.

(ii) For all other diesel engines only, 0.10 gram per brake horsepower-hour (0.037 gram per megajoule), as measured under transient operating conditions.

(iii) A manufacturer may elect to include any or all of its diesel HDE families in any or all of the particulate ABT programs for HDEs, within the restrictions described in § 86.098–15 as applicable. If the manufacturer elects to include engine families in any of these programs, the particulate FEL may not exceed:

(A) For engine families intended for use in urban buses, 0.25 gram per brake horsepower-hour (0.093 gram per megajoule);

(B) For engine families *not* intended for use in urban buses, 0.60 gram per brake horsepower-hour (0.22 gram per megajoule). This ceiling value applies whether credits for the family are derived from averaging, trading or banking programs.

(b)(1) The opacity of smoke emission from new 1999 and later model year diesel heavy-duty engine shall not exceed:

(i) 20 percent during the engine acceleration mode.

(ii) 15 percent during the engine lugging mode.

(iii) 50 percent during the peaks in either mode.

(2) The standards set forth in paragraph (b)(1) of this section refer to exhaust smoke emissions generated under the conditions set forth in subpart I of this part and measured and calculated in accordance with those procedures.

(3) Evaporative emissions (total of non-oxygenated hydrocarbons plus methanol) from heavy-duty vehicles equipped with methanol-fueled diesel engines shall not exceed the following standards. The standards apply equally to certification and in-use vehicles. The spitback standard also applies to newly assembled vehicles.

(i) For vehicles with a Gross Vehicle Weight Rating of up to 14,000 lbs:

(A)(*1*) For the full three-diurnal test sequence described in § 86.1230–96, diurnal plus hot soak measurements: 3.0 grams per test.

(*2*) For the supplemental two-diurnal test sequence described in § 86.1230–96, diurnal plus hot soak measurements: 3.5 grams per test.

(B) *Running loss test:* 0.05 grams per mile.

(C) *Fuel dispensing spitback test:* 1.0 gram per test.

(ii) For vehicles with a Gross Vehicle Weight Rating of greater than 14,000 lbs:

(A)(*1*) For the full three-diurnal test sequence described in § 86.1230–96, diurnal plus hot soak measurements: 4.0 grams per test.

(*2*) For the supplemental two-diurnal test sequence described in § 86.1230–96, diurnal plus hot soak measurements: 4.5 grams per test.

(B) Running loss test: 0.05 grams per mile.

(iii)(A) For vehicles with a Gross Vehicle Weight Rating of up to 26,000 lbs, the standards set forth in paragraph (b)(3) of this section refer to a composite sample of evaporative emissions collected under the conditions and measured in accordance with the procedures set forth in subpart M of this part. For certification vehicles only, manufacturers may conduct testing to quantify a level of nonfuel background emissions for an individual test vehicle. Such a demonstration must include a description of the source(s) of emissions and an estimated decay rate. The demonstrated level of nonfuel background emissions may be subtracted from emission test results from certification vehicles if approved in advance by the Administrator.

(B) For vehicles with a Gross Vehicle Weight Rating of greater than 26,000 lbs., the standards set forth in paragraph (b)(3)(ii) of this section refer to the manufacturer's engineering design evaluation using good engineering practice (a statement of which is required in § 86.091–23(b)(4)(ii)).

(iv) All fuel vapor generated during in-use operations shall be routed exclusively to the evaporative control system (e.g., either canister or engine purge). The only exception to this requirement shall be for emergencies.

(4) *Evaporative emissions* from 1999 and later model year heavy-duty vehicles equipped with natural gas-fueled or liquefied petroleum gas-fueled heavy-duty engines shall not exceed the following standards. The standards apply equally to certification and in-use vehicles.

(i) For vehicles with a Gross Vehicle Weight Rating of up to 14,000 pounds for the full three-diurnal test sequence described in § 86.1230–96, diurnal plus hot soak measurements: 3.0 grams per test.

(ii) For vehicles with a Gross Vehicle Weight Rating of greater than 14,000 pounds for the full three-diurnal test sequence described in § 86.1230–96, diurnal plus hot soak measurements: 4.0 grams per test.

(iii)(A) For vehicles with a Gross Vehicle Weight Rating of up to 26,000 pounds, the standards set forth in paragraph (b)(4) of this section refer to a composite sample of evaporative emissions collected under the conditions set forth in subpart M of this part and measured in accordance with those procedures.

(B) For vehicles with a Gross Vehicle Weight Rating greater than 26,000 pounds, the standards set forth in paragraphs (b)(3)(ii) and (b)(4)(ii) of this section refer to the manufacturer's engineering design evaluation using good engineering practice (a statement of which is required in § 86.091–23(b)(4)(ii)).

(c) No crankcase emissions shall be discharged into the ambient atmosphere from any new 1999 or later model year methanol-, natural gas-, or liquefied petroleum gas-fueled diesel, or any naturally-aspirated diesel heavy-duty engine. For petroleum-fueled engines only, this provision does not apply to engines using turbochargers, pumps, blowers, or superchargers for air induction.

(d) Every manufacturer of new motor vehicle engines subject to the standards prescribed in this section shall, prior to taking any of the actions specified in section 203(a)(1) of the Act, test or cause to be tested motor vehicle engines in accordance with applicable procedures in subpart I or N of this part to ascertain that such test engines

meet the requirements of paragraphs (a), (b), (c), and (d) of this section.

[58 FR 34537, June 28, 1993, as amended at 59 FR 48503, Sept. 21, 1994; 60 FR 43888, Aug. 23, 1995; 62 FR 54720, Oct. 21, 1997]

Subpart B—Emission Regulations for 1977 and Later Model Year New Light-Duty Vehicles and New Light-Duty Trucks; Test Procedures

SOURCE: 42 FR 32954, June 28, 1977, unless otherwise noted.

§ 86.101 General applicability.

(a) The provisions of this subpart are applicable to 1977 and later model year new light-duty vehicles and light-duty trucks.

(1) Sections 86.101 through 86.145–78 apply for 1978 and later model years.

(2) [Reserved]

(3) Sections 86.150 through 86.157 describe the refueling test procedures for light-duty vehicles and light-duty trucks and apply for model years 1998 and later.

(4) For fuel economy testing according to part 600 of this chapter, in the model years of 2000 and 2001 only, manufacturers have the option to use the dynamometer provisions of § 86.108–00(b)(1) and § 86.129–00 (a), (b), and (c) instead of the provisions of § 86.108–00(b)(2) and § 86.129–00 (a), (e), and (f).

(b) Provisions of this subpart apply to tests performed by both the Administrator and motor vehicle manufacturers.

(c) *National Low Emission Vehicle Program for light-duty vehicles and light light-duty trucks.* A manufacturer may elect to certify 1999 and later model year light-duty vehicles and light light-duty trucks to the provisions of the National Low Emission Vehicle Program contained in subpart R of this part. Subpart R of this part is applicable only to those manufacturers that opt into the National Low Emission Vehicle Program, under the provisions of subpart R of this part, and that have not exercised a valid opt-out from the National Low Emission Vehicle Program, which opt-out has gone into effect under the provisions of § 86.1707. All provisions of this subpart are applicable to vehicles certified pursuant to subpart R of this part, except as specifically noted in subpart R of this part.

[42 FR 32954, June 28, 1977, as amended at 59 FR 16295, Apr. 6, 1994; 59 FR 48504, Sept. 21, 1994; 61 FR 54890, Oct. 22, 1996; 62 FR 31234, June 6, 1997; 63 FR 965, Jan. 7, 1998]

§ 86.102 Definitions.

The definitions in subpart A apply to this subpart.

[45 FR 14508, Mar. 5, 1980]

§ 86.103 Abbreviations.

The abbreviations in subpart A apply to this subpart.

[45 FR 14508, Mar. 5, 1980]

§ 86.104 Section numbering; construction.

(a) The model year of initial applicability is indicated by the section number. The two digits following the hyphen designate the first model year for which a section is effective. A section remains effective until superseded.

Example Section 86.111–78 applies to the 1978 and subsequent model years until superseded. If a § 86.111–81 is promulgated it would take effect beginning with the 1981 model year; § 86.111–78 would apply to model years 1978 through 1980.

(b) A section reference without a model year suffix refers to the section applicable for the appropriate model year.

(c) Unless indicated otherwise, all provisions in this subpart apply to petroleum-fueled, natural gas-fueled, liquefied petroleum gas-fueled and methanol-fueled vehicles.

[42 FR 32954, June 28, 1977. Redesignated at 45 FR 14508, Mar. 5, 1980, as amended at 54 FR 14499, Apr. 11, 1989; 59 FR 48504, Sept. 21, 1994]

§ 86.105 Introduction; structure of subpart.

(a) This subpart describes the equipment required and the procedures to follow in order to perform gaseous exhaust, particulate, and evaporative emission tests on light-duty vehicles and light-duty trucks. Subpart A of this part sets forth testing requirements and test intervals necessary to comply with EPA certification procedures. Not all emission measurement

techniques described in this subpart will be necessary for all vehicles. Subpart A of this part defines the conditions under which vehicles may be exempted from measuring methane and/or waived from measuring particulate matter.

(b) Three topics are addressed in this subpart. Sections 86.106 through 86.115 set forth specifications and equipment requirements; §§86.116 through 86.126 discuss calibration methods and frequency; test procedures and data requirements are listed in §§86.127 through 86.157.

[56 FR 25760, June 5, 1991, as amended at 59 FR 16295, Apr. 6, 1994; 59 FR 48504, Sept. 21, 1994]

§86.106–00 Equipment required; overview.

Section 86.106–00 includes text that specifies requirements that differ from §86.106–96. Where a paragraph in §86.106–96 is identical and applicable to §86.106–00, this may be indicated by specifying the corresponding paragraph and the statement ''[Reserved]. For guidance see §86.106–96.''

(a) introductory text through (a)(2) [Reserved]. For guidance see §86.106–96.

(a)(3) Fuel, analytical gas, and driving schedule specifications. Fuel specifications for exhaust and evaporative emissions testing and for mileage accumulation for petroleum-fueled and methanol-fueled vehicles are specified in §86.113. Analytical gases are specified in §86.114. The EPA Urban Dynamometer Driving Schedule (UDDS), US06, and SC03 driving schedules, for use in exhaust emission tests, and the New York City Cycle (NYCC), for use with the UDDS in running loss tests, are specified in §§86.115, 86.130, 86.159, 86.160, and appendix I to this part.

(b) [Reserved]

[61 FR 54890, Oct. 22, 1996]

§86.106–90 Equipment required; overview.

(a) This subpart contains procedures for exhaust emissions tests on petroleum-fueled, and methanol-fueled light-duty vehicles and light-duty trucks, and for evaporative emission tests on gasoline-fueled and methanol-fueled light-duty vehicles and light-duty trucks. Certain items of equipment are not necessary for a particular test, *e.g.*, evaporative enclosure when testing diesel vehicles. Alternate sampling systems may be used if shown to yield equivalent results, and if approved in advance by the Administrator. Equipment required and specifications are as follows:

(1) *Evaporative emission tests, gasoline-fueled and methanol-fueled vehicles.* The evaporative emission test is closely related to and connected with the exhaust emission test. All vehicles tested for evaporative emissions must be tested for exhaust emissions. Further, unless the evaporative emission test is waived by the Administrator under §86.090–26, all gasoline-fueled and methanol-fueled vehicles must undergo both tests. (Diesel vehicles are excluded from the evaporative emission standard.) Section 86.107 specifies the necessary equipment.

(2) *Exhaust emission tests.* All vehicles subject to this subpart are tested for exhaust emissions. The exhaust from Otto-cycle vehicles is tested for gaseous emissions only, using the CVS concept (§86.109). The exhaust from diesel vehicles is tested for both gaseous and particulate emissions. Petroleum-fueled diesel vehicle testing also utilizes the CVS concept of measuring emissions, but requires that a PDP–CVS or CFV with heat exchanger be used, and that it be connected to a dilution tunnel in order to sample particulate emissions (§86.110). The exhaust from methanol-fueled diesel vehicles is tested for both gaseous and particulate emissions using the CVS concept (either PDP CVS or CFV as specified in §86.109 or PDP–CVS or CFV with heat exchanger as specified in §86.110 may be used) and is connected to a dilution tunnel to sample particulate emissions (§86.110) (This equipment may be used with methanol-fueled Otto-cycle vehicles, however, particulates are not measured). All gasoline-fueled and methanol-fueled vehicles are either tested for evaporative emissions or undergo a diurnal heat build. Petroleum-fueled diesel vehicles are excluded from this requirement. Equipment necessary and specifications appear in §§86.108 through 86.114.

(3) *Fuel, analytical gas, and driving schedule specifications.* Fuel specifications for exhaust and evaporative emissions testing and for mileage accumulation for petroleum-fueled and methanol-fueled vehicles are specified in § 86.113. Analytical gases are specified in § 86.114. The EPA Urban Dynamometer Driving Schedule (UDDS) for use in petroleum-fueled and methanol-fueled exhaust emissions tests is specified in § 86.115 and appendix I.

(b) [Reserved]

[54 FR 14499, Apr. 11, 1989]

§ 86.106–94 Equipment required; overview.

(a) This subpart contains procedures for exhaust emissions tests on petroleum-fueled, natural gas-fueled, liquefied petroleum gas-fueled and methanol-fueled light-duty vehicles and light-duty trucks, and for evaporative emission tests on gasoline-fueled, natural gas-fueled, liquefied petroleum gas-fueled and methanol-fueled light-duty vehicles and light-duty trucks. Certain items of equipment are not necessary for a particular test, *e.g.,* evaporative enclosure when testing petroleum-fueled diesel vehicles. Alternate sampling systems may be used if shown to yield equivalent results and if approved in advance by the Administrator. Equipment required and specifications are as follows:

(1) *Evaporative emission tests.* The evaporative emission test is closely related to and connected with the exhaust emission test. All vehicles tested for evaporative emissions must be tested for exhaust emissions. Further, unless the evaporative emission test is waived by the Administrator under § 86.090–26, all vehicles must undergo both tests. (Petroleum-fueled diesel vehicles are excluded from the evaporative emission standard.) Section 86.107 specifies the necessary equipment.

(2) *Exhaust emission tests.* All vehicles subject to this subpart are subject to testing for both gaseous and particulate exhaust emissions using the CVS concept (§ 86.109), except where exemptions or waivers are expressly provided in subpart A of these regulations. Vehicles subject to the ''Tier 0'' (i.e., phase-out) standards described under subpart A are exempted from testing for methane emissions (except natural gas-fueled vehicles). Otto-cycle vehicles subject to the ''Tier 0'' standards are waived from testing for particulates. For vehicles waived from the requirement for measuring particulate emissions, use of a dilution tunnel is not required (§ 86.109). The CVS must be connected to the dilution tunnel if particulate emission sampling is required (§ 86.110). Petroleum- and methanol-fueled diesel-cycle vehicle testing requires that a PDP-CVS or CFV with heat exchanger be used. (This equipment may be used with methanol-fueled Otto-cycle vehicles; however, particulates need not be measured for vehicles that are waived from the requirement). All gasoline-fueled, methanol-fueled, natural gas-fueled and liquified petroleum gas-fueled vehicles are either tested for evaporative emissions or undergo a diurnal heat build. Petroleum-fueled diesel-cycle vehicles are excluded from this requirement. Equipment necessary and specifications appear in §§ 86.108 through 86.114.

(3) *Fuel, analytical gas, and driving schedule specifications.* Fuel specifications for exhaust and evaporative emissions testing and for mileage accumulation are specified in § 86.113. Analytical gases are specified in § 86.114. The EPA Urban Dynamometer Driving Schedule (UDDS) for use in exhaust emissions tests is specified in § 86.115 and appendix I of this part.

(b) [Reserved]

[56 FR 25760, June 5, 1991, as amended at 59 FR 48504, Sept. 21, 1994]

§ 86.106–96 Equipment required; overview.

(a) This subpart contains procedures for exhaust emission tests on petroleum-fueled, natural gas-fueled, liquefied petroleum gas-fueled, and methanol-fueled light-duty vehicles and light-duty trucks, and for evaporative emission tests on gasoline-fueled, natural gas-fueled, liquefied petroleum gas-fueled, and methanol-fueled light-duty vehicles and light-duty trucks. Certain items of equipment are not necessary for a particular test, e.g., evaporative enclosure when testing petroleum-fueled diesel vehicles. Alternate equipment, procedures, and calculation

methods may be used if shown to yield equivalent or superior results, and if approved in advance by the Administrator. Equipment required and specifications are as follows:

(1) *Evaporative emission tests.* The evaporative emission test is closely related to and connected with the exhaust emission test. All vehicles tested for evaporative emissions must undergo testing according to the test sequences described in §86.130–96; however, the Administrator may omit measurement of exhaust emissions to test for evaporative emissions. The Administrator may truncate a test after any valid emission measurement without affecting the validity of the test. Further, unless the evaporative emission test is waived by the Administrator under §86.090–26, all vehicles must undergo both tests. (Petroleum-fueled diesel vehicles are excluded from the evaporative emission standard.) Section 86.107 specifies the necessary equipment.

(2) *Exhaust emission tests.* All vehicles subject to this subpart are subject to testing for both gaseous and particulate exhaust emissions using the CVS concept (see §86.109), except where exemptions or waivers are expressly provided in subpart A of this part. Vehicles subject to the ''Tier 0'' (i.e., phase-out) standards described under subpart A of this part are exempted from testing for methane emissions. Otto-cycle vehicles subject to the ''Tier 0'' standards are waived from testing for particulates. For vehicles waived from the requirement for measuring particulate emissions, use of a dilution tunnel is not required (see §86.109). The CVS must be connected to the dilution tunnel if particulate emission sampling is required (see §86.110). Petroleum- and methanol-fueled diesel-cycle vehicle testing requires that a PDP-CVS or CFV-CVS with heat exchanger be used. (This equipment may be used with methanol-fueled Otto-cycle vehicles; however, particulates need not be measured for vehicles that are waived from the requirement). All vehicles equipped with evaporative canisters are preconditioned by loading the canisters with hydrocarbon vapors. Petroleum-fueled diesel vehicles are excluded from this requirement.

(3) *Fuel, analytical gas, and driving schedule specifications.* Fuel specifications for exhaust and evaporative emissions testing and for mileage accumulation are specified in §86.113. Analytical gases are specified in §86.114. The EPA Urban Dynamometer Driving Schedule (UDDS) for use in exhaust emissions tests is specified in §86.115 and appendix I of this part.

(b) [Reserved]

[58 FR 16026, Mar. 24, 1993, as amended at 59 FR 48504, Sept. 21, 1994; 60 FR 43888, Aug. 23, 1995]

§86.107–90 Sampling and analytical system; evaporative emissions.

(a) Component description (evaporative emissions sampling system). The following components will be used in evaporative emissions sampling systems for testing under this subpart.

(1) *Evaporative emission measurement enclosure.* The enclosure shall be readily sealable, rectangular in shape, with space for personnel access to all sides of the vehicle. When sealed, the enclosure shall be gas tight in accordance with §86.117. Interior surfaces must be impermeable and non-reactive to hydrocarbons and to methanol (if the enclosure is used for methanol-fueled vehicles). One surface should be of flexible, impermeable and non-reactive material to allow for minor volume changes, resulting from temperature changes. Wall design should promote maximum dissipation of heat, and if artificial cooling is used, interior surface temperatures shall not be less than 68 °F (20 °C).

(2) *Evaporative emission hydrocarbon and methanol analyzers.* (i) For gasoline- and methanol-fueled vehicles a hydrocarbon analyzer utilizing the hydrogen flame ionization principle (FID) shall be used to monitor the atmosphere within the enclosure (a heated FID (HFID)(235°±15 °F (113±8 °C)) is recommended for methanol-fueled vehicles). Instrument bypass flow may be returned to the enclosure. The FID shall have a response time to 90 percent of final reading of less than 1.5 seconds, and be capable of meeting performance requirements expressed as a function of Cstd: where Cstd is the specific enclosure hydrocarbon level, in

ppm, corresponding to the evaporative emission standard:

(A) Stability of the analyzer shall be better than 0.01 Cstd ppm at zero and span over a 15-minute period on all ranges used.

(B) Repeatability of the analyzer, expressed as one standard deviation, shall be better than 0.005 Cstd ppm on all ranges used.

(ii) For methanol-fueled vehicles, a methanol sampling and analyzing system is required in addition to the FID analyzer. The methanol sampling equipment shall consist of impingers for collecting the methanol sample and appropriate equipment for drawing the sample through the impingers. The analytical equipment shall consist of a gas chromatograph equipped with a flame ionization detector. (NOTE: For 1990 through 1994 model year methanol-fueled vehicles, a HFID calibrated on methanol may be used in place of the HFID, calibrated on propane plus the methanol impingers and associated analytical equipment).

(iii) The methanol sampling system shall be designed such that, if a test vehicle emitted the maximum allowable level of methanol (based on all applicable standards) during any phase of the test, the measured concentration in the primary impinger would exceed either 25 mg/l or a concentration equal to 25 times the limit of detection for the GC analyzer, and such that the primary impinger collects at least 90 percent of the analyte in the samples. The remaining analyte shall be collected by the secondary impinger. This requirement does not apply to dilution air samples, since they do not require secondary impingers, or to samples in which the concentrations approach the limit of detection. The provisions of this paragraph apply to the design of sampling systems, not to individual tests.

(3) *Evaporative emission hydrocarbon and methanol data recording system.* (i) The electrical output of the FID used for measuring hydrocarbons (or hydrocarbons plus methanol as appropriate) shall be recorded at least at the initiation and termination of each diurnal or hot soak. The recording may be by means of a strip chart potentiometric recorder, by use of an on-line computer system or other suitable means. In any case, the recording system must have operational characteristics (signal to noise ratio, speed of response, etc.) equivalent to or better than those of the signal source being recorded, and must provide a permanent record of results. The record shall show a positive indication of the initiation and completion of each diurnal or hot soak along with the time elapsed between initiation and completion of each soak.

(ii) For the methanol sample, permanent records shall be made of the following: the volumes of deionized water introduced into each impinger, the rate and time of sample collection, the volumes of each sample introduced into the gas chromatograph, the flow rate of carrier gas through the column, the column temperature, and the chromatogram of the analyzed sample.

(4) *Tank fuel heating system.* The tank fuel heating system shall consist of a heat source and a temperature controller. A typical heat source is a 2000 W heating pad. Other sources may be used as required by circumstances. The temperature controller may be manual, such as a variable voltage transformer, or may be automated. The heating system must not cause hot spots on the tank wetted surface which could cause local overheating of the fuel. Heat must not be applied to the vapor in the tank above the liquid fuel. The temperature controller must be capable of controlling the fuel tank temperature during the diurnal soak to within ±3 °F (±1.7 °C) of the following equation:

$$F = T_o + (0.4)t.$$

or *For SI units:*

$$C = T_o + (2/9)t.$$

Where:
F = Temperature in °F.
C = Temperature in °C.
t = Time since start of test in minutes.
T_o = initial temperature in °F (or in °C for SI units).

(5) *Temperature recording system.* Strip chart recorder(s) or automatic data processor shall be used to record enclosure ambient and vehicle fuel tank temperature during the evaporative emissions test. The temperature recorder or data processor shall record each temperature at least once every minute. The recording system shall be

capable of resolving time to ±15s and capable of resolving temperature to ±0.75 °F (±0.42 °C). The temperature recording system (recorder and sensor) shall have an accuracy of ±3 °F (±1.7 °C). The recorder (data processor) shall have a time accuracy of ±15s and a precision of ±15s. Two ambient temperature sensors, connected to provide one average output, shall be located in the enclosure. These sensors shall be located at the approximate vertical centerline of each side wall extending 4 inches (nominally) into the enclosure at a height of 3±0.5 ft (0.9±0.2m). The vehicle fuel tank temperature sensor shall be located in the fuel tank so as to measure the temperature of the prescribed test fuel at the approximate mid-volume of the fuel. Manufacturers shall arrange that vehicles furnished for testing at Federal certification facilities be equipped with iron-constantan Type J thermocouples for measurement of fuel tank temperature.

(6) *Purge blower.* One or more portable or fixed blowers shall be used to purge the enclosure. The blowers shall have sufficient flow capacity to reduce the enclosure hydrocarbon and/or methanol concentration from the test level to the ambient level between tests. Actual flow capacity will depend upon the time available between tests.

(7) *Mixing blower.* One or more small blowers or fans with a total capacity of 200 to 1000 cfm shall be used to mix the contents of the enclosure during evaporative emission testing. No portion of the air stream shall be directed toward the vehicle. Maintenance of uniform concentrations throughout the enclosure is important to the accuracy of the test.

(b) [Reserved]

[54 FR 14499, Apr. 11, 1989, as amended at 60 FR 34335, June 30, 1995]

§86.107–96 Sampling and analytical systems; evaporative emissions.

(a) *Testing enclosures*—(1) *Diurnal emission test.* The enclosure shall be readily sealable, rectangular in shape, with space for personnel access to all sides of the vehicle. When sealed, the enclosure shall be gas tight in accordance with §86.117–96. Interior surfaces must be impermeable and nonreactive to hydrocarbons (and to methanol, if the enclosure is used for methanol-fueled vehicles). The temperature conditioning system shall be capable of controlling the internal enclosure air temperature to follow the prescribed temperature versus time cycle as specified in §86.133–96 and appendix II of this part, within an instantaneous tolerance of ±3.0 °F of the nominal temperature versus time profile throughout the test, and an average tolerance of 2.0 °F over the duration of the test (where the average is calculated using the absolute value of each measured deviation). The control system shall be tuned to provide a smooth temperature pattern that has a minimum of overshoot, hunting, and instability about the desired long-term ambient temperature profile. Interior surface temperatures shall not be less than 40 °F at any time during the diurnal emission test. To accommodate the volume changes due to enclosure temperature changes, either a variable-volume or fixed-volume enclosure may be used for diurnal emission testing:

(i) *Variable-volume enclosure.* The variable-volume enclosure expands and contracts in response to the temperature change of the air mass in the enclosure. Two potential means of accommodating the internal volume changes are movable panel(s), or a bellows design, in which impermeable bag(s) inside the enclosure expand and contract in response to internal pressure changes by exchanging air from outside the enclosure. Any design for volume accommodation must maintain the integrity of the enclosure as specified in §86.117–96 over the specified temperature range. Any method of volume accommodation shall limit the differential between the enclosure internal pressure and the barometric pressure to a maximum value of ±2.0 inches of water. The enclosure shall be capable of latching to a fixed volume. A variable-volume enclosure must be capable of accommodating a ±7 percent change from its ''nominal volume'' (see §86.117–96(b)), accounting for temperature and barometric pressure variation during testing.

(ii) *Fixed-volume enclosure.* The fixed-volume enclosure shall be constructed with rigid panels that maintain a fixed

enclosure volume, and meet the following requirements.

(A) The enclosure shall be equipped with a mechanism to maintain a fixed internal air volume. This may be accomplished either by withdrawing air at a constant rate and providing makeup air as needed, or by reversing the flow of air into and out of the enclosure in response to rising or falling temperatures. If inlet air is added continuously throughout the test, it should be filtered with activated carbon to provide a relatively low and constant hydrocarbon level. Any method of volume accommodation shall maintain the differential between the enclosure internal pressure and the barometric pressure to a maximum value of ±2.0 inches of water.

(B) The equipment shall be capable of measuring the mass of hydrocarbon and methanol (if the enclosure is used for methanol-fueled vehicles) in the inlet and outlet flow streams with a resolution of 0.01 gram per hour. A bag sampling system may be used to collect a proportional sample of the air withdrawn from and admitted to the enclosure. Alternatively, the inlet and outlet flow streams may be continuously analyzed using an on-line FID analyzer and integrated with the flow measurements to provide a continuous record of the mass hydrocarbon and methanol removal.

(2) *Running loss test.* The enclosure shall be readily sealable, rectangular in shape, with space for personnel access to all sides of the vehicle. When sealed, the enclosure shall be gas tight in accordance with § 86.117–96. The enclosure may be equipped with a personnel door, provided that the enclosure can still meet the requirements of § 86.117–96 with the door installed. Interior surfaces must be impermeable and nonreactive to hydrocarbons and to methanol (if the enclosure is used for methanol-fueled vehicles). Interior surface temperatures shall not be less than 40 °F. If a running loss enclosure meets all the requirements of paragraph (a)(1) of this section, it may be used as a diurnal evaporative emission enclosure. The enclosure must contain a dynamometer that meets the requirements of § 86.108. Provisions shall be made to remove exhaust gases from the enclosure. During the running loss test, ambient temperatures must be maintained at 95±5 °F (95±2 °F on average). An air or oxygen cylinder with an attached self-contained breathing apparatus may be provided for the vehicle operator. The air required for vehicle operation shall be provided by one of the following methods:

(i) The running loss enclosure may be equipped to supply air to the vehicle, at a temperature of 95±5 °F, from sources outside of the running loss enclosure directly into the operating engine's air intake system. Supplemental air requirements (e.g., for an air pump) shall be supplied by drawing air from the engine intake source.

(ii) If it is shown to yield equivalent or superior results, the running loss enclosure may be designed with an air makeup system that brings outside air into the enclosure to accommodate the aspiration needs of the engine and any auxiliary devices. The makeup air shall be monitored to establish the background hydrocarbon levels (or hydrocarbon and methanol, levels, if applicable) of the makeup air. A filter may be used to provide dry air with a stable concentration of background hydrocarbon. The makeup-air vent shall be readily sealable for calibration of the enclosure and other purposes. For calculation of running loss emissions, it may be assumed that the hydrocarbon and methanol concentration in the air consumed by the vehicle is the same as that of the rest of the air in the enclosure.

(3) *Hot soak test.* The hot soak test may be conducted by holding the vehicle in an enclosure that meets the requirements for either diurnal emission or running loss tests. The enclosure shall be configured to provide an internal enclosure ambient temperature of 95±10 °F for the first 5 minutes, and 95±5 °F (95±2 °F on average) for the remainder of the hot soak test.

(i) If the hot soak test is conducted in the same enclosure as the immediately preceding running loss test, interior surface temperatures shall not be below 70 °F for the last 55 minutes of the hot soak test.

(ii) If the hot soak test is not conducted in the same enclosure as the immediately preceding running loss test,

interior surface temperatures shall not be below 70 °F for the duration of the hot soak test.

(b) *Evaporative emission hydrocarbon and methanol analyzers.* (1) For gasoline fueled, natural gas-fueled, liquefied petroleum gas-fueled and methanol-fueled vehicles a hydrocarbon analyzer utilizing the hydrogen flame ionization principle (FID) shall be used to monitor the atmosphere within the enclosure (a heated FID (HFID)(235°±15 °F (113±8 °C)) is recommended for methanol-fueled vehicles). For natural gas-fueled vehicles, the FID may be calibrated using methane, or if calibrated using propane the FID response to methane shall be determined and applied to the FID hydrocarbon reading. Provided evaporative emission results are not effected, a probe may be used to detect or verify hydrocarbon sources during a running loss test. Instrument bypass flow may be returned to the enclosure. The FID shall have a response time to 90 percent of final reading of less than 1.5 seconds.

(2) For methanol-fueled vehicles, a methanol sampling and analyzing system is required in addition to the FID analyzer. The methanol sampling equipment shall consist of impingers for collecting the methanol sample and appropriate equipment for drawing the sample through the impingers. The analytical equipment shall consist of a gas chromatograph equipped with a flame ionization detector.

(3) The methanol sampling system shall be designed such that, if a test vehicle emitted the maximum allowable level of methanol (based on all applicable standards) during any phase of the test, the measured concentration in the primary impinger would exceed either 25 mg/l or a concentration equal to 25 times the limit of detection for the GC analyzer, and such that the primary impinger collects at least 90 percent of the analyte in the samples. The remaining analyte shall be collected by the secondary impinger. This requirement does not apply to dilution air samples, since they do not require secondary impingers, or to samples in which the concentrations approach the limit of detection. The provisions of this paragraph apply to the design of sampling systems, not to individual tests.

(c) *Evaporative emission hydrocarbon and methanol data recording system.* (1) The electrical output of the FID used for measuring hydrocarbons (or hydrocarbons plus methanol, as appropriate) shall be recorded at least at the initiation and termination of each running loss and hot soak test, and at least at the initiation and termination of the enclosure sampling period(s) for the diurnal emission test, as described in § 86.133. The recording may be taken by means of a strip chart potentiometric recorder, by use of an on-line computer system or other suitable means. In any case, the recording system must have operational characteristics (signal-to-noise ratio, speed of response, etc.) equivalent to or better than those of the signal source being recorded, and must provide a permanent record of results. The record shall show a positive indication of the initiation and completion of each hot soak, running loss, or diurnal emission test (including initiation and completion of sampling period(s)), along with the time elapsed during each soak.

(2) For the methanol sample, permanent records shall be made of the following: the volumes of deionized water introduced into each impinger, the rate and time of sample collection, the volumes of each sample introduced into the gas chromatograph, the flow rate of carrier gas through the column, the column temperature, and the chromatogram of the analyzed sample.

(d) *Fuel temperature control system.* Fuel temperatures of the test vehicle shall be controlled, as specified in § 86.134(g)(1)(xv), with the following combination of fans. The control system shall be tuned and operated to provide a smooth and continuous fuel temperature profile that is representative of the on-road temperature profile. The running loss test configuration should be designed to avoid heating or cooling the fuel tank's vapor space in a way that would cause vapor temperature behavior to be unrepresentative of the vehicle's on-road profile.

(1) A vehicle cooling fan shall discharge air to the front of the vehicle.

The fan shall be a road-speed modulated fan that is controlled to a discharge velocity that follows the dynamometer roll speed, at least up to speeds of 30 mph, throughout the driving cycle. If a warning light or gauge indicates that the vehicle's engine coolant has overheated, subsequent test runs on the vehicle must include a vehicle cooling fan that follows the dynamometer roll speed at all speeds throughout the test cycle. The fan may direct airflow to both the vehicle radiator air inlet(s) and the vehicle underbody.

(2) An additional fan may be used to discharge airflow from the front of the vehicle directly to the vehicle underbody to control fuel temperatures. Such a fan shall provide a total discharge airflow not to exceed 8,000 cfm.

(3) Additional fans may be used to route heating or cooling air directly at the bottom of the vehicle's fuel tank. The air supplied to the tank shall be between 85° and 160 °F, with a total discharge airflow not to exceed 4,000 cfm. For exceptional circumstances, manufacturers may direct up to 6,000 cfm at the bottom of the fuel tank with the advance approval of the Administrator.

(4) Direct fuel heating may be needed for canister preconditioning, as specified in § 86.132(j)(2). Also, under exceptional circumstances in which airflow alone is insufficient to control fuel temperatures during the running loss test, direct fuel tank heating may be used (see § 86.134–96(g)(1)(xv)). The heating system must not cause hot spots on the tank wetted surface that could cause local overheating of the fuel. Heat must not be applied directly to the tank's vapor space, nor to the liquid-vapor interface.

(e) *Temperature recording system.* A strip chart potentiometric recorder, an on-line computer system, or other suitable means shall be used to record enclosure ambient temperature during all evaporative emission test segments, as well as vehicle fuel tank temperature during the running loss test. The recording system shall record each temperature at least once every minute. The recording system shall be capable of resolving time to ±15 s and capable of resolving temperature to ±0.75 °F (±0.42 °C). The temperature recording system (recorder and sensor) shall have an accuracy of ±3 °F (±1.7 °C). The recorder (data processor) shall have a time accuracy of ±15 s and a precision of ±15 s. Enclosures shall be equipped with two ambient temperature sensors, connected to provide one average output, located 3 feet above the floor at the approximate mid-length of each side wall of the enclosure and within 3 to 12 inches of each side wall. For diurnal emission testing, an additional temperature sensor shall be located underneath the vehicle to provide a temperature measurement representative of the air temperature under the fuel tank. For running loss testing, an ambient temperature sensor shall be located at the inlet to the fan that provides engine cooling. Manufacturers shall arrange that vehicles furnished for testing at federal certification facilities be equipped with temperature sensors for measurement of fuel tank temperatures. Vehicles shall be equipped with two temperature sensors installed to provide an average liquid fuel temperature. The temperature sensors shall be placed to measure the temperature at the mid-volume of the liquid fuel at a fill level of 40 percent of nominal tank capacity. An additional temperature sensor may be placed to measure vapor temperatures approximately at the mid-volume of the vapor space, though measurement of vapor temperatures is optional during the running loss test. In-tank temperature sensors are not required for the supplemental two-diurnal test sequence specified in § 86.130–96.

(f) *Pressure recording system.* A strip chart potentiometric recorder, an on-line computer system, or other suitable means, shall be used to record the enclosure gage pressure for any testing in an enclosure, as well as the vehicle's fuel tank pressure during the running loss test and the outdoor driving procedure specified in § 86.129–94(d). Fuel tank pressure measurement and recording equipment are optional during the running loss test. The recording system shall record each pressure at least once every minute. The recording system shall be capable of resolving time to ±15 s and capable of resolving pressure to ±0.1 inches of water. The

pressure recording system (recorder and sensor) shall have an accuracy of ±1.0 inch of water. The recorder (data processor) shall have a time accuracy of ±15 s and a precision of ±15 s. The pressure transducer shall be installed to measure the pressure in the vapor space of the fuel tank.

(g) *Purge blower.* One or more portable or fixed blowers shall be used to purge the enclosure. The blowers shall have sufficient flow capacity to reduce the enclosure hydrocarbon and/or methanol concentration from the test level to the ambient level between tests. Actual flow capacity will depend upon the time available between tests.

(h) *Mixing blower.* Blowers or fans shall be used to mix the enclosure contents during evaporative emission testing. The inlets and outlets of the air circulation blower(s) shall be configured to provide a well dispersed air circulation pattern that produces effective internal mixing and avoids significant temperature or hydrocarbon stratification. Maintenance of uniform concentrations throughout the enclosure is important to the accuracy of testing.

(1) *Diurnal emission test.* Blowers or fans shall have a capacity of 0.8±0.2 cfm per cubic foot of the nominal enclosure volume for mixing in the enclosure. Additional fans may be used to maintain a minimum wind speed of 5 mph (8 km/h) under the fuel tank of the test vehicle.

(2) *Running loss test.* Blowers or fans shall have a total capacity of at least 1.0 cfm per cubic foot of the nominal enclosure volume.

(3) *Hot soak test.* Blowers or fans must have a capacity of 0.8±0.2 cfm per cubic foot of the nominal enclosure volume. Circulated air shall not be aimed directly at the vehicle.

(i) *Point-source running loss measurement facility.* Some system requirements pertain specifically to running loss testing by the point-source method, in which emissions from potential sources are collected and routed to a sampling system. Emissions are sampled with the same equipment and techniques as for exhaust emission measurement. The test environment must contain a dynamometer that meets the requirements of § 86.108. During the running loss test, ambient temperatures must be maintained at 95±5 °F (95±2 °F on average). An air or oxygen cylinder with an attached self-contained breathing apparatus may be provided for the vehicle operator.

(1) The running loss vapor vent collection system shall be configured to collect all running loss emissions from each of the discrete point sources that function as vehicle fuel system vapor vents, and transport the collected vapor emissions to a CFV- or PDP-based dilution and measurement system. The collection system shall consist of a collector at each vehicle vapor vent, lengths of heated sample line connecting each collector to the inlet of the heated sample pump, and lengths of heated sample line connecting the outlet of the heated sample pump to the inlet of the running loss fuel vapor sampling system. Up to 3 feet of unheated line connecting each of the vapor collectors to the heated sample lines shall be allowed. Each heated sample pump and its associated sample lines shall be maintained at a temperature between 175 °F and 200 °F to prevent condensation of fuel vapor in the sample lines. The heated sample pump(s) and its associated flow controls shall be configured and operated to draw a flow of ambient air into each collector at a flow rate of at least 0.67 cfm. The flow controls on each heated sampling system shall include an indicating flow meter that provides an alarm output to the data recording system if the flow rate drops below 0.67 cfm by more than 5 percent. The collector inlet for each discrete vapor vent shall be placed in proximity to the vent as necessary to capture any fuel vapor emissions without significantly affecting flow or pressure of the normal action of the vent. The collector inlets shall be designed to interface with the configuration and orientation of each specific vapor vent. For vapor vents that terminate in a tube or hose barb, a short length of tubing of an inside diameter larger throughout its length than the inside diameter of the vent outlet may be used to extend the vent into the mouth of the collector. For those vapor vent designs that are not compatible with such collector configurations, the vehicle manufacturer

shall supply a collector that is configured to interface with the vapor vent design and that terminates in a fitting that is capable of capturing all vapor emitted from the vent. The Administrator may test for running losses by the point-source method without heating sample lines or pumps.

(2) The running loss fuel vapor sampling system shall be a CFV- or PDP-based dilution and measurement system that further dilutes the running loss fuel vapors collected by the vapor vent collection system(s) with ambient air, collects continuously proportional samples of the diluted running loss vapors and dilution air in sample bags, and measures the total dilute flow through the sampling system over each test interval. In practice, the system shall be configured and operated in a manner that is directly analogous to an exhaust emissions constant volume sampling system, except that the input flow to the system is the flow from the running loss vapor vent collection system(s) instead of vehicle exhaust flow. The system shall be configured and operated to meet the following requirements:

(i) The running loss fuel vapor sampling system shall be designed to measure the true mass of fuel vapor emissions collected by the running loss vapor vent collection system from the specified fuel vapor vents. The total volume of the mixture of running loss emissions and dilution air shall be measured and a continuously proportioned sample of volume shall be collected for analysis. Mass emissions shall be determined from the sample concentration and total flow over the test period.

(ii) The PDP–CVS shall consist of a dilution air filter and mixing assembly, heat exchanger, positive-displacement pump, sampling system, and associated valves, pressure and temperature sensors. The PDP–CVS shall conform to the following requirements:

(A) The gas mixture temperature, measured at a point immediately ahead of the positive-displacement pump, shall be within ±10 °F of the designed operating temperature at the start of the test. The gas mixture temperature variation from its value at the start of the test shall be limited to ±10 °F during the entire test. The temperature measuring system shall have an accuracy and precision of ±2 °F.

(B) The pressure gauges shall have an accuracy and precision of ±1.6 inches of water (±0.4 kPa).

(C) The flow capacity of the CVS shall not exceed 350 cfm.

(D) Sample collection bags for dilution air and running loss fuel vapor samples shall be sufficient size so as not to impede sample flow.

(iii) The CFV sample system shall consist of a dilution air filter and mixing assembly, a sampling venturi, a critical flow venturi, a sampling system and assorted valves, and pressure and temperature sensors. The CFV sample system shall conform to the following requirements:

(A) The temperature measuring system shall have an accuracy and precision of ±2 °F and a response time of 0.100 seconds of 62.5 percent of a temperature change (as measured in hot silicone oil).

(B) The pressure measuring system shall have an accuracy and precision of ±1.6 inches of water (0.4 kPa).

(C) The flow capacity of the CVS shall not exceed 350 cfm.

(D) Sample collection bags for dilution air and running loss fuel vapor samples shall be of sufficient size so as not to impede sample flow.

(3) An on-line computer system or strip-chart recorder shall be used to record the following additional parameters during the running loss test sequence:

(i) CFV (if used) inlet temperature and pressure.

(ii) PDP (if used) inlet temperature, pressure, and differential pressure.

[58 FR 16027, Mar. 24, 1993, as amended at 59 FR 48505, Sept. 21, 1994; 60 FR 34335, June 30, 1995; 60 FR 43888, Aug. 23, 1995]

§ 86.107–98 Sampling and analytical system.

Section 86.107–98 includes text that specifies requirements that differ from § 86.107–96. Where a paragraph in § 86.107–96 is identical and applicable to § 86.107–98, this may be indicated by specifying the corresponding paragraph and the statement ''[Reserved]. For guidance see § 86.107–96.'' Where a corresponding paragraph of § 86.107–96 is

not applicable, this is indicated by the statement ''[Reserved].''

(a)(1) through (a)(3) [Reserved]. For guidance see § 86.107–96.

(a)(4) *Refueling emissions test.* The requirements detailed in § 86.107–90 (a)(1) shall apply. Alternatively, an enclosure meeting the specifications detailed in § 86.107–96 (a)(1), (2), or (3) may be used if approved in advance by the Administrator. In addition, the enclosure shall have one or more access ports leading to flexible, automatic sealing boots, in the wall(s) of the enclosure. The function of the access port(s) and boots shall be to allow fueling of the test vehicle from a fuel nozzle and hose located outside of the enclosure, with only the spout of the nozzle passing through the automatic sealing opening of the boot during fueling. There shall be no loss in the gas tightness of the enclosure at the opening of the boot either when the nozzle is inserted or when the nozzle is not inserted.

(b) through (d) [Reserved]. For guidance see § 86.107–96.

(e) *Temperature recording system*—(1) *For all emission testing.* A strip chart potentiometric recorder, an on-line computer system, or other suitable means shall be used to record enclosure ambient temperature during all evaporative emission test segments, as well as vehicle fuel tank temperature during the running loss test. The recording system shall record each temperature at least once every minute. The recording system shall be capable of resolving time to ±15 s and capable of resolving temperature to ±0.75 °F (±0.42 °C). The temperature recording system (recorder and sensor) shall have an accuracy of ±3 °F (±1.7 °C). The recorder (data processor) shall have a time accuracy of ±15 s and a precision of ±15 s. Enclosures shall be equipped with two ambient temperature sensors, connected to provide one average output, located 3 feet above the floor at the approximate mid-length of each side wall of the enclosure and within 3 to 12 inches of each side wall. For diurnal emission testing, an additional temperature sensor shall be located underneath the vehicle to provide a temperature measurement representative of the temperature of the air under the fuel tank. For running loss testing, an ambient temperature sensor shall be located at the inlet to the fan that provides engine cooling. Manufacturers shall arrange that vehicles furnished for testing at federal certification facilities be equipped with temperature sensors for measurement of fuel tank temperature. Vehicles shall be equipped with 2 temperature sensors installed to provide an average liquid fuel temperature. The temperature sensors shall be placed to measure the temperature at the mid-volume of the liquid fuel at a fill level of 40 percent of nominal tank capacity. An additional temperature sensor may be placed to measure vapor temperatures approximately at the mid-volume of the vapor space, though measurement of vapor temperatures is optional during the running loss test. In-tank temperature sensors are not required for the supplemental two-diurnal test sequence specified in § 86.130–96 or for the refueling test specified in § 86.151–98.

(2) *Refueling emission testing only.* In addition to the enclosure ambient temperature recording system described in paragraph (e)(1) of this section, strip chart recorder(s) or automatic data processor shall be used to record vehicle soak area ambient temperature and dispensed fuel temperature at the nozzle during the test. The temperature recorder(s) or data processor shall record each temperature at least once every 20 seconds (the soak area ambient temperature recorder may be a continuous recording system). The recording system shall be capable of resolving time to ±15s and be capable of resolving temperature to ±0.75 °F (0.42 °C).

(f) through (h)(3) [Reserved]. For guidance see § 86.107–96.

(h)(4) *Refueling emission test.* Blowers or fans must have a capacity of 0.8±0.2 cfm per cubic foot of the nominal enclosure volume. Circulated air shall not be aimed directly at the vehicle.

(5) *Spilled fuel mixing blower; refueling emission test.* An explosion-proof blower of 100–200 ft^3/min (2.8–5.7 m^3/min) capacity is required to enhance mixing of vapors from spilled fuel through the enclosure atmosphere during tests. The

discharge from this blower shall be directed toward the region of the enclosure floor where fuel spillage during fueling may occur.

(i) [Reserved]. For guidance see § 86.107–96.

(j) *Refueling equipment.* The refueling equipment shall consist of a fuel delivery system with temperature control equipment, fuel flow safety switch, dispensing pump, hose, nozzle and a meter to measure the dispensed fuel volume. The dispensing nozzle shall be a commercial model, not equipped with vapor recovery hardware. A fuel recirculation system may be utilized to avoid trapping of unheated fuel in the hose. The fuel delivery system must be capable of delivering fuel at 67±1.5 °F (19.4±0.8 °C) and a constant flow rate between 4.2 and 9.8 gal/min (15.9 and 37.1 liter/min) with a tolerance of ±0.3 gal/min (±1.1 liter/min) during the refueling emissions measurement phase of the test. The accuracy of the meter for measuring the dispensed fuel volume shall be ±2 percent at the test flow rate.

[59 FR 16295, Apr. 6, 1994, as amended at 60 FR 43890, Aug. 23, 1995]

§ 86.108–00 Dynamometer.

(a) The dynamometer shall simulate the road load force and inertia specified for the vehicle being tested, and shall determine the distance traveled during each phase of the test procedure.

(b) Two types of dynamometer roll configurations are currently approved by the Administrator:

(1) A small twin-roll dynamometer that has a nominal roll diameter of 8.65 inches and a nominal roll spacing of 17 inches; and

(2)(i) An electric dynamometer that has a single roll with a nominal diameter of 48 inches (1.20 to 1.25 meters).

(ii)(A) The dynamometer must be capable of dynamically controlling inertia load during the US06 test cycle as a function of a vehicle throttle position signal if a manufacturer desires using the following test option. Any time the duration of throttle operation greater than or equal to 85% of wide open throttle (WOT) is greater than or equal to eight seconds, the test inertia load may be adjusted during any of five EPA specified acceleration events by an amount of load that will eliminate additional throttle operation greater than or equal to 85% of WOT.

(B)(*1*) The specific US06 schedule accelerations time periods where inertia load adjustments may be applied are:

(*i*) 49 through 69 seconds;

(*ii*) 83 through 97 seconds;

(*iii*) 135 through 165 seconds;

(*iv*) 315 through 335 seconds; and

(*v*) 568 through 583 seconds.

(*2*) During these five time intervals when inertia load adjustment is occurring, inertia load adjustment is discontinued when throttle operation is less than 85% of WOT or at the end of the specified time interval.

(C) Each type of generic application for implementing this concept must receive the Administrator's approval before a manufacturer may use these inertia adjustments for official US06 schedule certification tests.

(c) Other dynamometer configurations may be used for testing if it can be demonstrated that the simulated road load power and inertia are equivalent, and if approved in advance by the Administrator.

(d) An electric dynamometer meeting the requirements of paragraph (b)(2) of this section, or a dynamometer approved as equivalent under paragraph (c) of this section, must be used for all types of emission testing in the following situations.

(1)(i) Gasoline vehicles which are part of an engine family which is designated to meet the phase-in of SFTP compliance required under the implementation schedule of table A00–1 of § 86.000–08, or table A00–3, or table A00–5 of § 86.000–09.

(ii) Diesel LDVs and LDT1s which are part of an engine family which is designated to meet the phase-in of SFTP compliance required under the implementation schedule of table A00–1 of § 86.000–08, or table A00–3, or table A00–5 of § 86.000–09.

(2) Starting with the 2002 model year, any light-duty vehicle or light light-duty truck which uses any regulated fuel.

(3) Starting with the 2004 model year, any heavy light-duty truck which uses any regulated fuel.

[61 FR 54890, Oct. 22, 1996]

EFFECTIVE DATE NOTE: At 61 FR 54890, Oct. 22, 1996, §86.108–00 was added. This section contains information collection and recordkeeping requirements and will not become effective until approval has been given by the Office of Management and Budget.

§86.108–79 Dynamometer.

(a) The dynamometer shall have a power absorption unit for simulation of road load power and flywheels or other means of simulating the inertia weight as specified in §86.129.

(b)(1) The dynamometer shall have a roll or shaft revolution counter for determination of distance driven.

(2) In lieu of the requirement in (b)(1) of this section the manufacturer shall provide some means, approved in advance by the Administrator, for the determination of distance driven.

(c) Small twin-roll dynamometers shall have a nominal roll diameter of 8.65 inches and a nominal roll spacing of 17 inches. Large single-roll dynamometers shall have a nominal roll diameter of 48 inches. Dynamometers with other roll specifications may be used if the total simulated road load power can be shown to be equivalent, and if approved in advance by the Administrator.

[42 FR 45651, Sept. 12, 1977]

§86.109–90 Exhaust gas sampling system; Otto-cycle vehicles.

(a)(1) *General.* The exhaust gas sampling system described in this paragraph is designed to measure the true mass of gaseous emissions in the exhaust of either Otto-cycle light-duty vehicles and light-duty trucks. In the CVS concept of measuring mass emissions, two conditions must be satisfied: the total volume of the mixture of exhaust and dilution air must be measured, and a continuously proportioned volume of sample must be collected for analysis. Mass emissions are determined from the sample concentration and total flow over the test period.

(2) *Vehicle tailpipe to CVS Duct.* For methanol-fueled vehicles, cooling of the exhaust gases in the duct connecting the vehicle tailpipe to the CVS shall be minimized. This may be accomplished by:

(i) Using a duct of unrestricted length maintained at 235°±15 °F (113°±8 °C), heating and possible cooling capabilities are required; or

(ii) Using a short duct (up to 12 feet long) constructed of smooth wall pipe with a minimum of flexible sections, maintained at 235°±15 °F (113°±8 °C) prior to the test and during the 10 minute hot soak segment and uninsulated during the test (insulation may remain in place and/or heating may occur during testing provided maximum temperature is not exceeded); or

(iii) Using smooth wall duct less than five feet long with no required heating.

(iv) Omitting the duct and performing the exhaust gas dilution function at the vehicle tailpipe exit.

(3) *Positive displacement pump.* The Positive Displacement Pump-Constant Volume Sampler (PDP–CVS), Figure B90–1 satisfies the first condition by metering at a constant temperature and pressure through the pump. The total volume is measured by counting the revolutions made by the calibrated positive displacement pump. The proportional samples for the bag sample, and for methanol-fueled vehicles, the methanol sample (Figure B90–2) and the formaldehyde sample (Figure B90–3), are achieved by sampling at a constant flow rate. For methanol-fueled vehicles, the sample lines for the methanol and formaldehyde samples are heated to 235°±15 °F (113°±8 °C).

NOTE: For 1990 through 1994 model year methanol-fueled vehicles, methanol and formaldehyde sampling may be omitted provided the bag sample (hydrocarbons and methanol) is analyzed using a HFID calibrated with methanol.

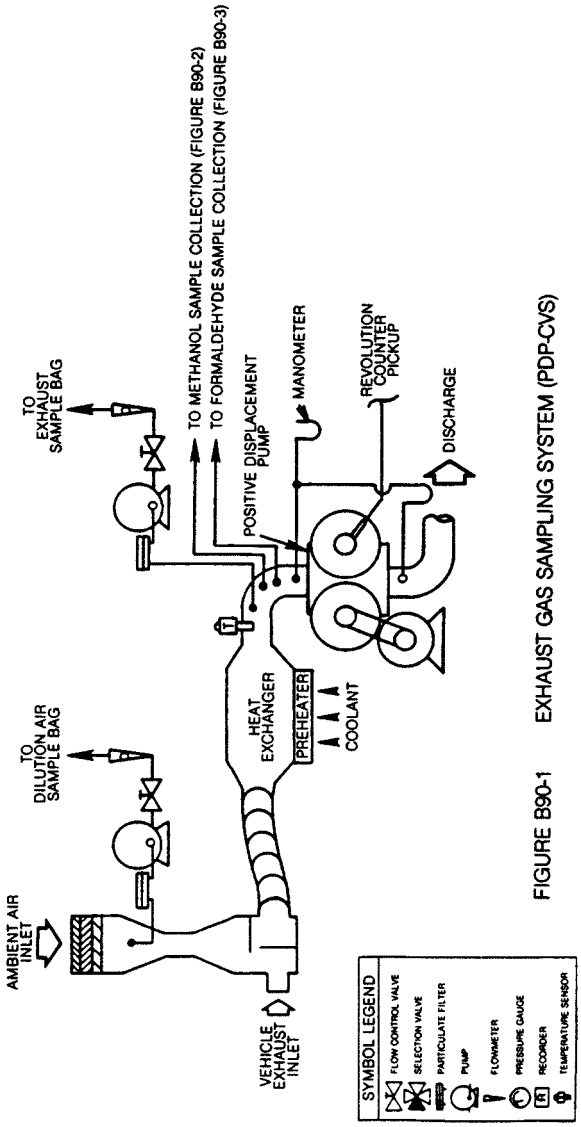

FIGURE B90-1 EXHAUST GAS SAMPLING SYSTEM (PDP-CVS)

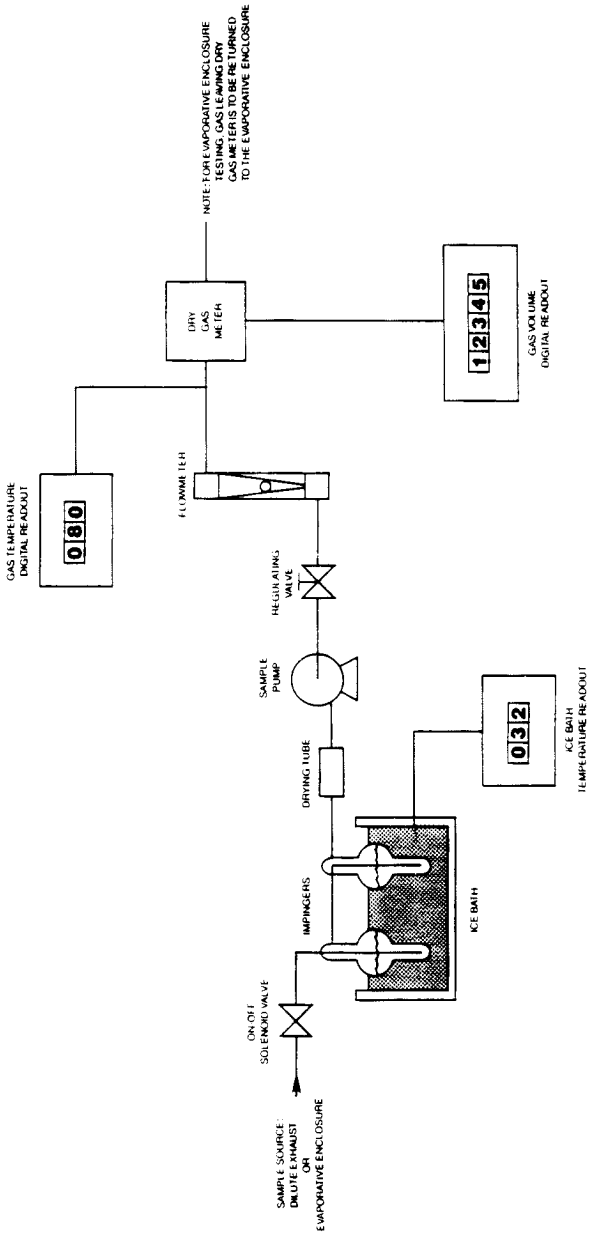

FIGURE B14-2 METHANOL SAMPLE COLLECTION FLOW SCHEMATIC

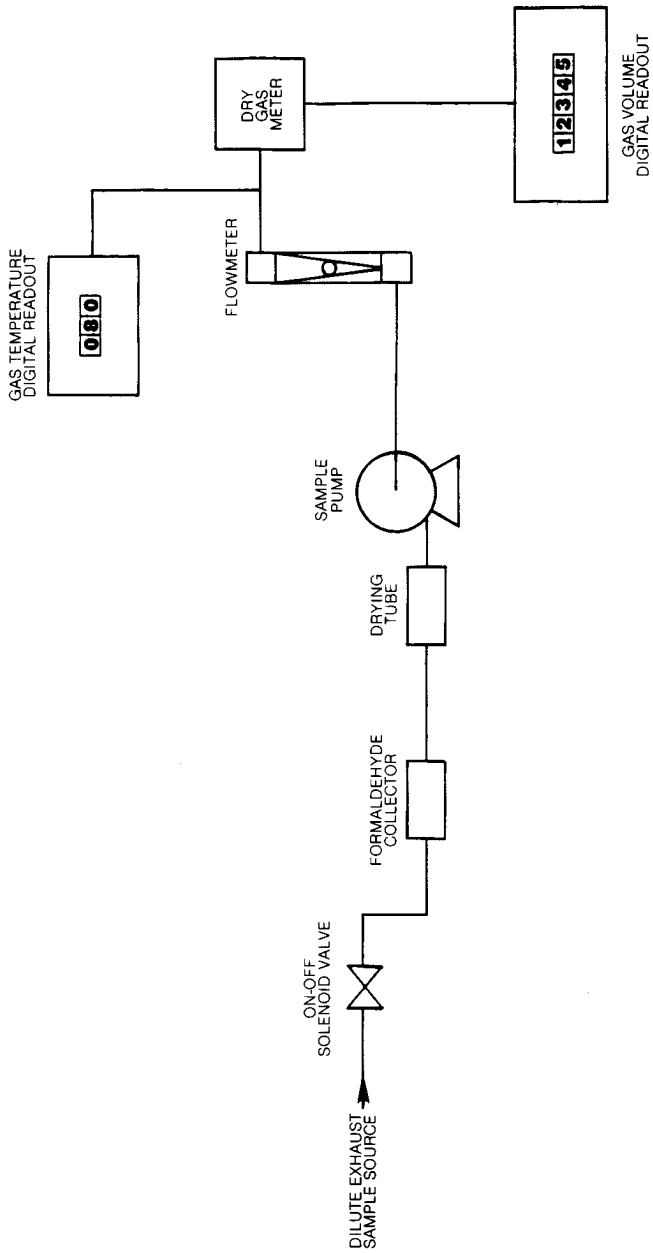

FIGURE B90-3 FORMALDEHYDE SAMPLE COLLECTION FLOW SCHEMATIC

(4) *Critical flow venturi.* The operation of the Critical Flow Venturi—Constant Volume Sampler (CFV–CVS) sample system, Figure B90–4, is based upon the principles of fluid dynamics associated with critical flow. Proportional sampling throughout temperature excursions is maintained by use of small

CFVs in the sample lines (for methanol-fueled vehicles, one line supplies sample for the bag sample, another line supplies sample for the methanol sample, and a third line supplies sample for the formaldehyde sample.) The methanol and formaldehyde sample lines are heated to 235°±15 °F (113°±8 °C) with care being taken to ensure that the CFVs of the sample probes are not heated since heating of the CFVs would cause loss of proportionality. The variable mixture flow rate is maintained at sonic velocity, is inversely proportional to the square root of the gas temperature, and is computed continuously. Since the pressure and temperature are the same at all venturi inlets, the sample volume is proportional to the total volume.

NOTE: For 1990 through 1994 model year methanol-fueled vehicles, methanol and formaldehyde sampling may be omitted provided the bag sample (hydrocarbons and methanol) is analyzed using a HFID calibrated with methanol.

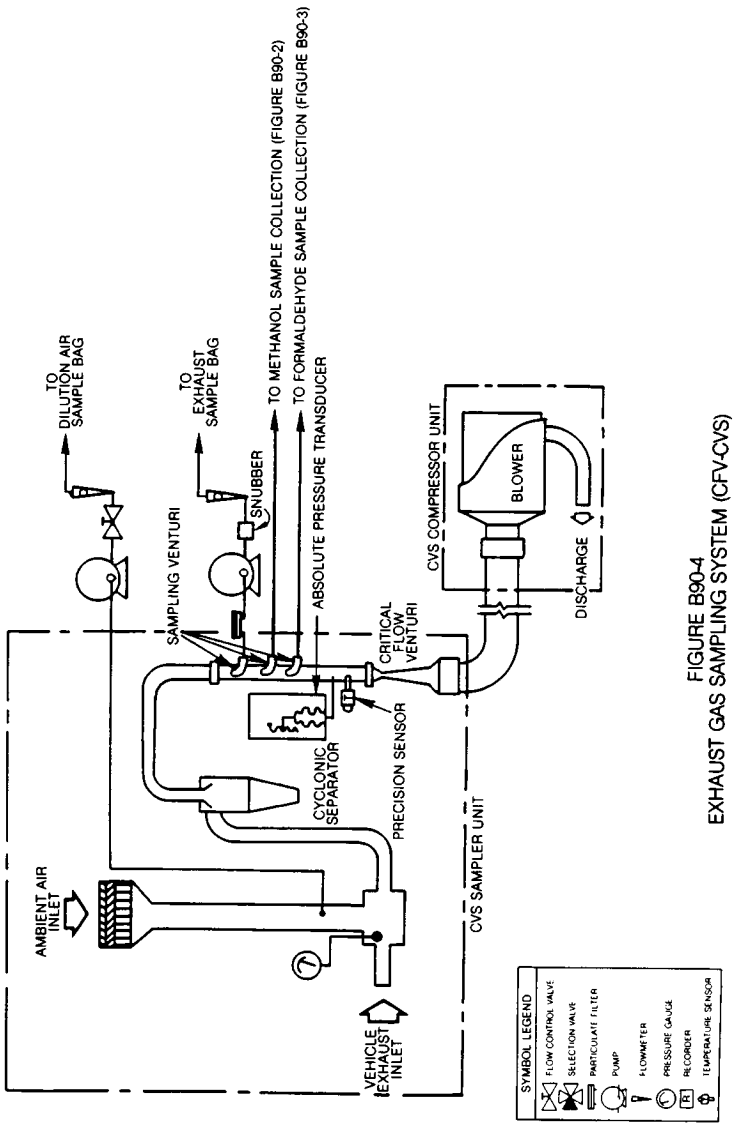

FIGURE B90-4
EXHAUST GAS SAMPLING SYSTEM (CFV-CVS)

(5) *Other systems.* Other sampling systems may be used if shown to yield equivalent results, and if approved in advance by the Administrator.

(b) *Component description, PDP–CVS.* The PDP–CVS, Figure B90–1, consists of a dilution air filter and mixing assembly, heat exchanger, positive displacement pump, sampling systems (see Figure B90–2 for methanol sampling system and Figure B90–3 for formaldehyde sampling system) sampling lines which are heated to 235°±15 °F (113°±8 °C) in the case of the methanol-fueled vehicles (heating of the sample lines may be omitted, provided the methanol and formaldehyde sample collection systems are close coupled to

the probes thereby preventing loss of sample due to cooling and resulting condensation in the sample lines), and associated valves, pressure and temperature sensors. The PDP–CVS shall conform to the following requirements:

(1) Static pressure variations at the tailpipe(s) of the vehicle shall remain within ±5 inches of water (1.2 kPa) of the static pressure variations measured during a dynamometer driving cycle with no connection to the tailpipe(s). (Sampling systems capable of maintaining the static pressure to within ±1 inch of water (0.25 kPa) will be used by the Administrator if a written request substantiates the need for this closer tolerance.)

(2) The gas mixture temperature, measured at a point immediately ahead of the positive displacement pump, shall be within ±10 °F (±5.6 °C) of the designed operating temperature at the start of the test. The gas mixture temperature variation from its value at the start of the test shall be limited to ±10 °F (±5.6 °C) during the entire test. The temperature measuring system shall have an accuracy and precision of ±2 °F (1.1 °C).

(3) The pressure gauges shall have an accuracy and precision of ±1.6 inches of water (0.4 kPa).

(4) The flow capacity of the CVS shall be large enough to eliminate water condensation in the system. (300 to 350 cfm (0.142 to 0.165 m^3/s) is sufficient for most petroleum-fueled vehicles. Higher flow rates are required for methanol fueled vehicles. Procedures for determining CVS flow rates are detailed in''Calculation of Emissions and Fuel Economy When Using Alternative Fuels,'' EPA 460/3–83–009.)

(5) Sample collection bags for dilution air and exhaust samples shall be of sufficient size so as not to impede sample flow. A single dilution air sample, covering the total test period, may be collected for determination of formaldehyde background (methanol-fueled vehicles).

(6) The methanol sample collection system and the formaldehyde sample collection system shall each be of sufficient capacity so as to collect samples of adequate size for analysis without significant impact on the volume of dilute exhaust passing through the PDP.

(c) *Component description, CFV–CVS.* The CFV-CVS sample system, Figure B90–4, consists of a dilution air filter and mixing assembly, a cyclone particulate separator, unheated sampling venturies for the bag samples, and for the methanol and formaldehyde samples from methanol-fueled vehicles, samples lines heated to 235°±15 °F (113°±8 °C) for the methanol and formaldehyde samples from methanol fueled vehicles (heating of the sample lines may be omitted provided, the methanol and formaldehyde sample collection systems are close coupled to the probes thereby preventing loss of sample due to cooling and resulting condensation in the sample lines), a critical flow venturi, and assorted valves, and pressure and temperature sensors. The CFV sample system shall conform to the following requirements:

(1) Static pressure variations at the tailpipe(s) of the vehicle shall remain within ±5 inches of water (1.2 kPa) of the static pressure variations measured during a dynamometer driving cycle with no connection to the tailpipe(s). (Sampling systems capable of maintaining the static pressure to within ±1 inch of water (0.25 kPa) will be used by the Administrator if a written request substantiates the need for this closer tolerance.)

(2) The temperature measuring system shall have an accuracy and precision of ±2 °F (1.1 °C) and a response time of 0.100 seconds to 62.5 percent of a temperature change (as measured in hot silicone oil).

(3) The pressure measuring system shall have an accuracy and precision of ±1.6 inches of water (0.4 kPa).

(4) The flow capacity of the CVS shall be large enough to virtually eliminate water condensation in the system (300 to 350 cfm (0.142 to 0.165 m^3/s) is sufficient for most petroleum-fueled vehicles). Higher flow rates are required with methanol-fueled vehicles. Procedures for determining CVS flow rates are detailed in''Calculation of Emission and Fuel Economy When Using Alternative Fuels,'' EPA 460/3–83–009.

(5) Sample collection bags for dilution air and exhaust samples shall be of sufficient size so as not to impede sample flow. A single dilution air sample covering the total test period may be

collected for determination of formaldehyde background for methanol-fueled vehicles.

(6) The methanol sample collection system and the formaldehyde sample collection system shall each be of sufficient capacity so as to collect samples of adequate size for analysis without significant impact on the volume of dilute exhaust passing through the CFV–CVS.

[54 FR 14500, Apr. 11, 1989]

§ 86.109–94 Exhaust gas sampling system; Otto-cycle vehicles not requiring particulate emission measurements.

(a)(1) *General.* The exhaust gas sampling system described in this paragraph is designed to measure the true mass of gaseous emissions in the exhaust of either Otto-cycle light-duty vehicles or light-duty trucks which are waived from requirements for the measurement of particulate emissions. In the CVS concept of measuring mass emissions, two conditions must be satisfied: the total volume of the mixture of exhaust and dilution air must be measured, and a continuously proportioned volume of sample must be collected for analysis. Mass emissions are determined from the sample concentration and total flow over the test period.

(2) *Vehicle tailpipe to CVS Duct.* For methanol-fueled vehicles, cooling of the exhaust gases in the duct connecting the vehicle tailpipe to the CVS shall be minimized. This may be accomplished by:

(i) Using a duct of unrestricted length maintained at a temperature above the maximum dew point of the exhaust, but below 250 °F (121 °C); heating and possibly cooling capabilities are required; or

(ii) Using a short duct (up to 12 feet long) constructed of smooth wall pipe with a minimum of flexible sections, maintained at a temperature above the maximum dew point of the exhaust, but below 250 °F (121 °C), prior to the test and during the 10 minute hot soak segment and uninsulated during the test (insulation may remain in place and/or heating may occur during testing provided maximum temperature is not exceeded); or

(iii) Using smooth wall duct less than five feet long with no required heating. A maximum of two short flexible connectors are allowed under this option; or

(iv) Omitting the duct and performing the exhaust gas dilution function at the vehicle tailpipe exit.

(3) *Positive displacement pump.* The Positive Displacement Pump-Constant Volume Sampler (PDP-CVS), Figure B94–1 satisfies the first condition by metering at a constant temperature and pressure through the pump. The total volume is measured by counting the revolutions made by the calibrated positive displacement pump. The proportional samples for the bag sample, and for methanol-fueled vehicles, the methanol sample (Figure B94–2) and the formaldehyde sample (Figure B94–3), are achieved by sampling at a constant flow rate. For methanol-fueled vehicles, the sample lines for the methanol and formaldehyde samples are heated to prevent condensation. The temperature of the sample lines shall be more than 5 °F (3 °C) above the maximum dew point of the sample, but below 250 °F (121 °C). (Note: For 1990 through 1994 model year methanol-fueled vehicles, methanol and formaldehyde sampling may be omitted provided the bag sample (hydrocarbons and methanol) is analyzed using a HFID calibrated with methanol.)

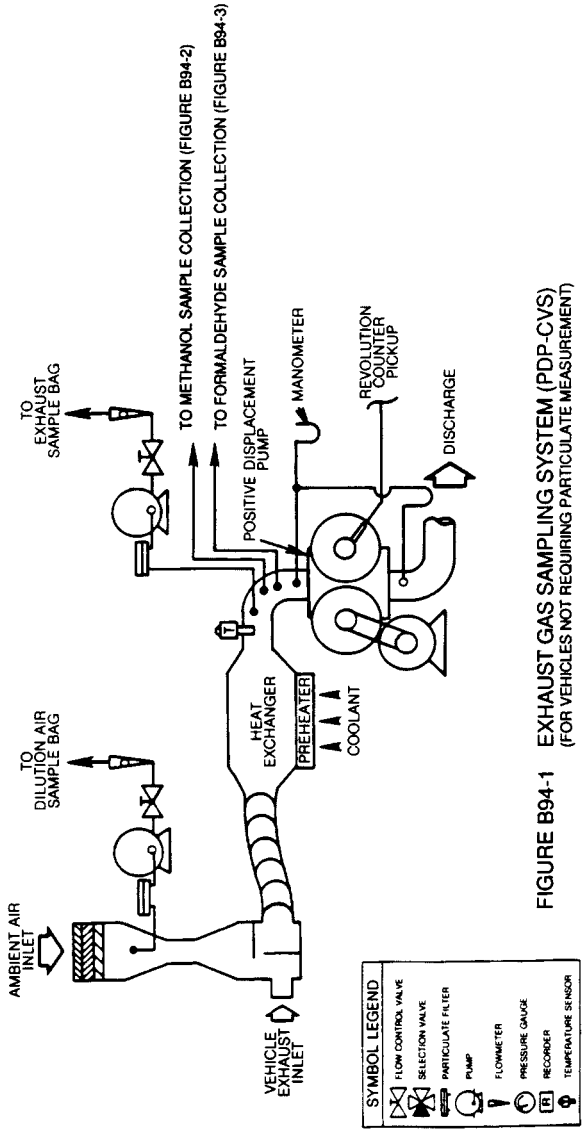

FIGURE B94-1 EXHAUST GAS SAMPLING SYSTEM (PDP-CVS)
(FOR VEHICLES NOT REQUIRING PARTICULATE MEASUREMENT)

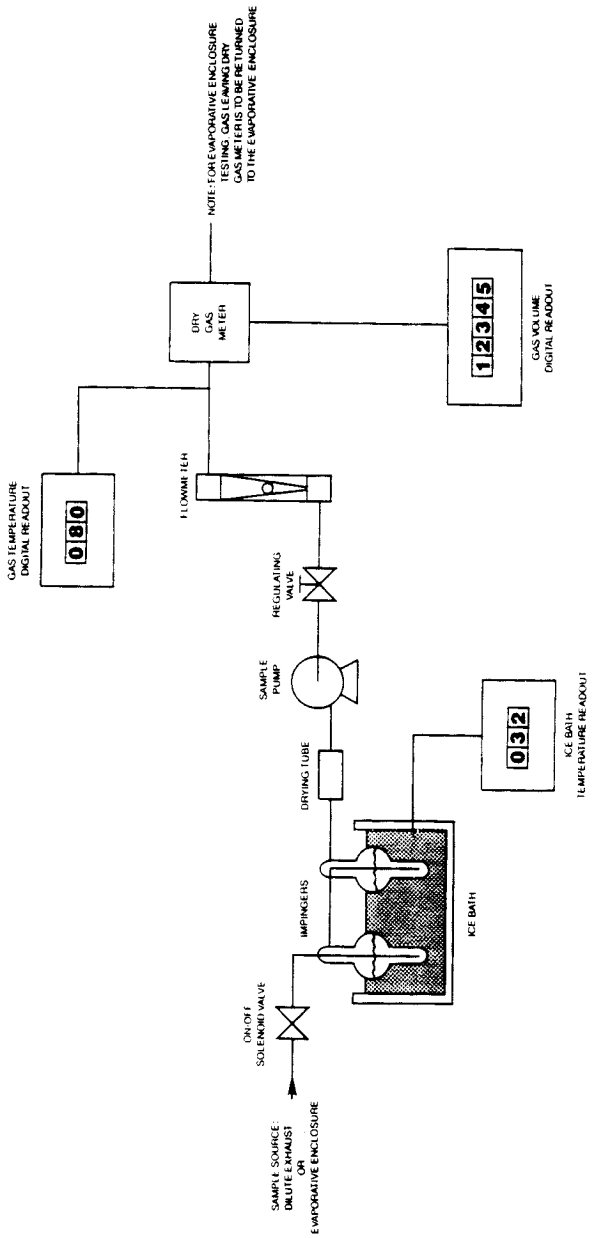

FIGURE B94-2 METHANOL SAMPLE COLLECTION FLOW SCHEMATIC

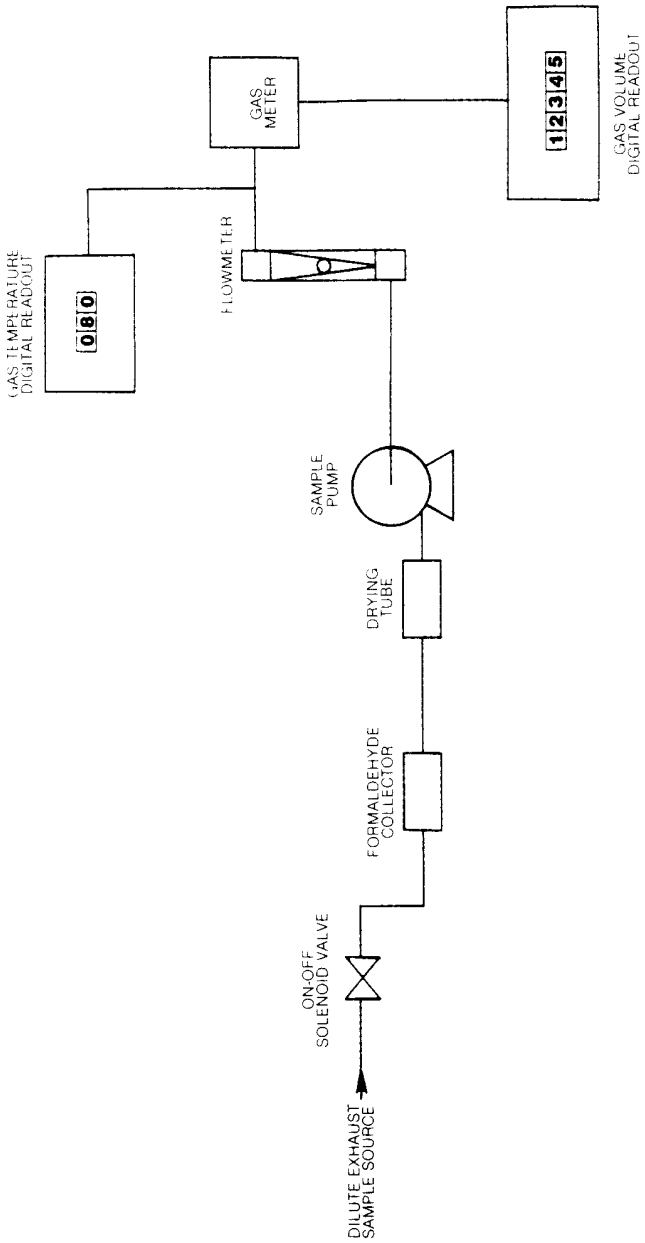

FIGURE B94-3 FORMALDEHYDE SAMPLE COLLECTION FLOW SCHEMATIC

(4) *Critical flow venturi.* The operation of the Critical Flow Venturi-Constant Volume Sampler (CFV–CVS) sample system, Figure B94–4, is based upon the principles of fluid dynamics associated with critical flow. Proportional sampling throughout temperature excursions is maintained by use of small

CFVs in the sample lines (for methanol-fueled vehicles, one line supplies sample for the bag sample, another line supplies sample for the methanol sample, and a third line supplies sample for the formaldehyde sample.) The methanol and formaldehyde sample lines are heated to prevent condensation. The temperature of the sample lines shall be more than 5 °F (3 °C) above the maximum dew point of the sample, but below 250 °F (121 °C). Care should be taken to ensure that the CFVs of the sample probes are not heated since heating of the CFVs would cause loss of proportionality. The variable mixture flow rate is maintained at sonic velocity, is inversely proportional to the square root of the gas temperature, and is computed continuously. Since the pressure and temperature are the same at all venturi inlets, the sample volume is proportional to the total volume. (Note: For 1990 through 1994 model year methanol-fueled vehicles, methanol and formaldehyde sampling may be omitted provided the bag sample (hydrocarbons and methanol) is analyzed using a HFID calibrated with methanol.)

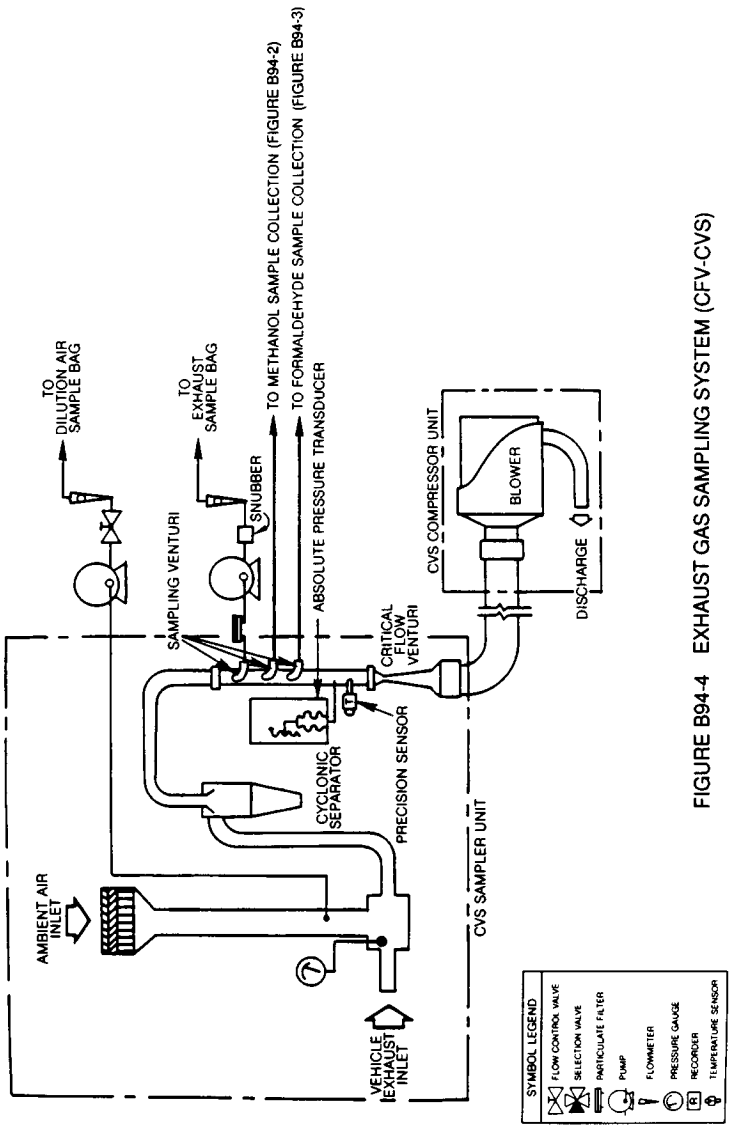

FIGURE B94-4 EXHAUST GAS SAMPLING SYSTEM (CFV-CVS)

(5) *Electronic flow control.* The Critical Flow Venturi-Electronic Flow Control-Constant Volume Sampler (CFV–EFC–CVS) system is identical to the CFV–CVS system described in paragraphs (a)(4) and (c) of this section, except that it maintains proportional sampling for methanol and formaldehyde by measuring the CVS flow rate, and electronically controlling sample flow rates. For methanol-fueled vehicles, the samples lines for the methanol and formaldehyde samples are heated to prevent condensation. The temperature of the sample lines shall be more than 5 °F (3 °C) above the maximum dew

point of the sample, but below 250 °F (121 °C).

(6) *Other systems.* Other sampling systems may be used if shown to yield equivalent or superior results, and if approved in advance by the Administrator.

(b) *Component description, PDP–CVS.* The PDP–CVS, Figure B94–1, consists of a dilution air filter and mixing assembly, heat exchanger, positive displacement pump, sampling systems (see Figure B94–2 for methanol sampling system and Figure B94–3 for formaldehyde sampling system) sampling lines which are heated to a temperature that is more than 5 °F (3 °C) above the maximum dew point of the sample, but below 250 °F (121 °C) in the case of the methanol-fueled vehicles (heating of the sample lines may be omitted, provided the methanol and formaldehyde sample collection systems are close coupled to the probes thereby preventing loss of sample due to cooling and resulting condensation in the sample lines), and associated valves, pressure and temperature sensors. The PDP–CVS shall conform to the following requirements:

(1) Static pressure variations at the tailpipe(s) of the vehicle shall remain within ±5 inches of water (1.2 kPa) of the static pressure variations measured during a dynamometer driving cycle with no connection to the tailpipe(s). (Sampling systems capable of maintaining the static pressure to within ±1 inch of water (0.25 kPa) will be used by the Administrator if a written request substantiates the need for this closer tolerance.)

(2) The gas mixture temperature, measured at a point immediately ahead of the positive displacement pump, shall be within ±10 °F (±5.6 °C) of the designed operating temperature at the start of the test. The gas mixture temperature variation from its value at the start of the test shall be limited to ±10 °F (±5.6 °C) during the entire test. The temperature measuring system shall have an accuracy and precision of ±2 °F (1.1 °C).

(3) The pressure gauges shall have an accuracy and precision of ±1.6 inches of water (0.4 kPa).

(4) The flow capacity of the CVS shall be large enough to completely eliminate water condensation in the dilution and sampling systems. (300 to 350 cfm (0.142 to 0.165 m^3/s) is sufficient for most petroleum-fueled vehicles. Higher flow rates are required for methanol-fueled vehicles and may be required for natural gas-fueled and liquefied petroleum gas-fueled vehicles. Procedures for determining CVS flow rates are detailed in ''Calculation of Emissions and Fuel Economy When Using Alternative Fuels,'' EPA 460/3–83–009.) (Copies may be obtained from U.S. Department of Commerce, NTIS, Springfield, Virginia 22161; order ± PB 84104702.) Dehumidifying the dilution air before entering the CVS is allowed. Hearing the dilution air is also allowed, provided:

(i) The air (or air plus exhaust gas) temperature does not exceed 250 °F.

(ii) Calculation of the CVS flow rate necessary to prevent water condensation is based on the lowest temperature encountered in the CVS prior to sampling. (It is recommended that the CVS system be insulated when heated dilution air is used.)

(iii) The dilution ratio is sufficiently high to prevent condensation in bag samples as they cool to room temperature.

(5) Sample collection bags for dilution air and exhaust samples shall be of sufficient size so as not to impede sample flow. A single dilution air sample, covering the total test period, may be collected for the determination of methanol and formaldehyde background (methanol-fueled vehicles).

(6) The methanol sample collection system and the formaldehyde sample collection system shall each be of sufficient capacity so as to collect samples of adequate size for analysis without significant impact on the volume of dilute exhaust passing through the PDP. The systems shall also comply with the following requirements that apply to the design of the systems, not to individual tests.

(i) The methanol system shall be designed such that, if a test vehicle emitted the maximum allowable level of methanol (based on all applicable standards) during the first phase of the test, the measured concentration in the primary impinger would exceed either 25 mg/l or a concentration equal to 25 times the limit of detection for the

GC analyzer. Sampling systems for all phases shall be identical.

(ii) The formaldehyde system shall be designed such that, if a test vehicle emitted formaldehyde at a rate equal to twenty percent of the maximum allowable level of NMHCE (i.e., 0.05 g/mi for a 0.25 g/mi NMHCE standard), or the maximum formaldehyde level allowed by a specific formaldehyde standard, whichever is less, during the first phase of the test, the concentration of formaldehyde in the DNPH solution of the primary impinger, or solution resulting from the extraction of the DNPH cartridge, shall exceed either 2.5 mg/l or a concentration equal to 25 times the limit of detection for the HPLC analyzer. Sampling systems for all phases shall be identical.

(iii) The methanol and formaldehyde impinger systems shall be designed such that the primary impinger collects at least 90 percent of the analyte in the samples. The remaining analyte shall be collected by the secondary impinger. This requirement does not apply to dilution air samples, since they do not require secondary impingers, or to samples in which the concentrations approach the limit of detection.

(c) *Component description, CFV–CVS.* The CFV–CVS sample system, Figure B94–4, consists of a dilution air filter and mixing assembly, a cyclone particulate separator, unheated sampling venturies for the bag samples, and for the methanol and formaldehyde samples from methanol-fueled vehicles, samples lines heated to a temperature that is more than 5 °F (3 °C) above the maximum dew point of the sample, but below 250 °F (121 °C) for the methanol and formaldehyde samples from methanol fueled vehicles (heating of the sample lines may be omitted provided, the methanol and formaldehyde sample collection systems are close coupled to the probes thereby preventing loss of sample due to cooling and resulting condensation in the sample lines), a critical flow venturi, and assorted valves, and pressure and temperature sensors. The CFV sample system shall conform to the following requirements:

(1) Static pressure variations at the tailpipe(s) of the vehicle shall remain within ±5 inches of water (1.2 kPa) of the static pressure variations measured during a dynamometer driving cycle with no connection to the tailpipe(s). (Sampling systems capable of maintaining the static pressure to within ±1 inch of water (0.25 kPa) will be used by the Administrator if a written request substantiates the need for this closer tolerance.)

(2) The temperature measuring system shall have an accuracy and precision of ±2 °F (1.1 °C) and a response time of 0.100 seconds to 62.5 percent of a temperature change (as measured in hot silicone oil).

(3) The pressure measuring system shall have an accuracy and precision of ±1.6 inches of water (0.4 kPa).

(4) The flow capacity of the CVS shall be large enough to completely eliminate water condensation in the dilution and sampling systems. (300 to 350 cfm (0.142 to 0.165 m^3/s) is sufficient for most petroleum-fueled vehicles. Higher flow rates are required for methanol-fueled vehicles and may be required for natural gas-fueled and liquefied petroleum gas-fueled vehicles. Procedures for determining CVS flow rates are detailed in ''Calculation of Emissions and Fuel Economy When Using Alternative Fuels,'' EPA 460/3–83–009.) Dehumidifying the dilution air before entering the CVS is allowed. Heating the dilution air is also allowed, provided:

(i) The air (or air plus exhaust gas) temperature does not exceed 250 °F (121 °C).

(ii) Calculation of the CVS flow rate necessary to prevent water condensation is based on the lowest temperature encountered in the CVS prior to sampling. (It is recommended that the CVS system be insulated when heated dilution air is used.)

(iii) The dilution ratio is sufficiently high to prevent condensation in bag samples as they cool to room temperature.

(5) Sample collection bags for dilution air and exhaust samples shall be of sufficient size so as not to impede sample flow. A single dilution air sample, covering the total test period, may be collected for the determination of methanol and formaldehyde background (methanol-fueled vehicles).

(6) The methanol sample collection system and the formaldehyde sample

collection system shall each be of sufficient capacity so as to collect samples of adequate size for analysis without significant impact on the volume of dilute exhaust passing through the CVS. The systems shall also comply with the following requirements that apply to the design of the systems, not to individual tests.

(i) The methanol system shall be designed such that, if a test vehicle emitted the maximum allowable level of methanol (based on all applicable standards) during the first phase of the test, the measured concentration in the primary impinger would exceed either 25 mg/l or a concentration equal to 25 times the limit of detection for the GC analyzer. Sampling systems for all phases shall be identical.

(ii) The formaldehyde system shall be designed such that, if a test vehicle emitted formaldehyde at a rate equal to twenty percent of the maximum allowable level of NMHCE (i.e., 0.05 g/mi for a 0.25 g/mi NMHCE standard), or the maximum formaldehyde level allowed by a specific formaldehyde standard, whichever is less, during the first phase of the test, the concentration of formaldehyde in the DNPH solution of the primary impinger, or solution resulting from the extraction of the DNPH cartridge, shall exceed either 2.5 mg/l or a concentration equal to 25 times the limit of detection for the HPLC analyzer. Sampling systems for all phases shall be identical.

(iii) The methanol and formaldehyde systems shall be designed such that the primary impinger collects at least 90 percent of the analyte in the samples. The remaining analyte shall be collected by the secondary impinger. This requirement does not apply to dilution air samples, since they do not require secondary impingers, or to samples in which the concentrations approach the limit of detection.

(d) *Component description, CFV–EFC–CVS.* The CVS sample system is identical to the system described in paragraph (c) of this section, plus includes a means of electronically measuring the CVS flow rate, and electronic mass flow controllers for the methanol and formaldehyde sample lines. The EFC sample system shall conform to all of the requirements listed in paragraph (c), except that the methanol and formaldehyde samples must both be drawn from a static probe. It also must comply with the following additional requirements:

(1) The ratio of the CVS mass flow rate to the sample mass flow rate shall not deviate from the design ratio by more than ±5 percent. (The volumetric sample flow rate shall be varied inversely with the square root of the bulk stream temperature.)

(2) Flow meters to totalize sample volumes for methanol and/or formaldehyde samples shall meet the accuracy specifications of § 86.120. Total sample volumes may be obtained from the flow controllers, provided that the controllers meet the accuracy specifications of § 86.120.

[56 FR 25760, June 5, 1991, as amended at 59 FR 48505, Sept. 21, 1994; 60 FR 34336, June 30, 1995]

§ 86.110–90 Exhaust gas sampling system; diesel vehicles.

(a) *General.* The exhaust gas sampling system described in this paragraph is designed to measure the true mass of both gaseous and particulate emissions in the exhaust of either diesel light-duty vehicles and light-duty trucks. This system utilizes the CVS concept (described in § 86.109) of measuring mass emissions. The mass of gaseous emissions is determined from the sample concentration and total flow over the test period. The mass of particulate emissions is determined from a proportional mass sample collected on a filter and from the total flow over the test period. General requirements are as follows:

(1) This sampling system requires the use of a PDP–CVS or a CFV sample system with heat exchanger connected to a dilution tunnel. Figure B90–5 is a schematic drawing of the PDP system. Figure B90–6 is a schematic drawing of the CFV system (methanol-fueled Otto-cycle vehicles may be tested using this test equipment.)

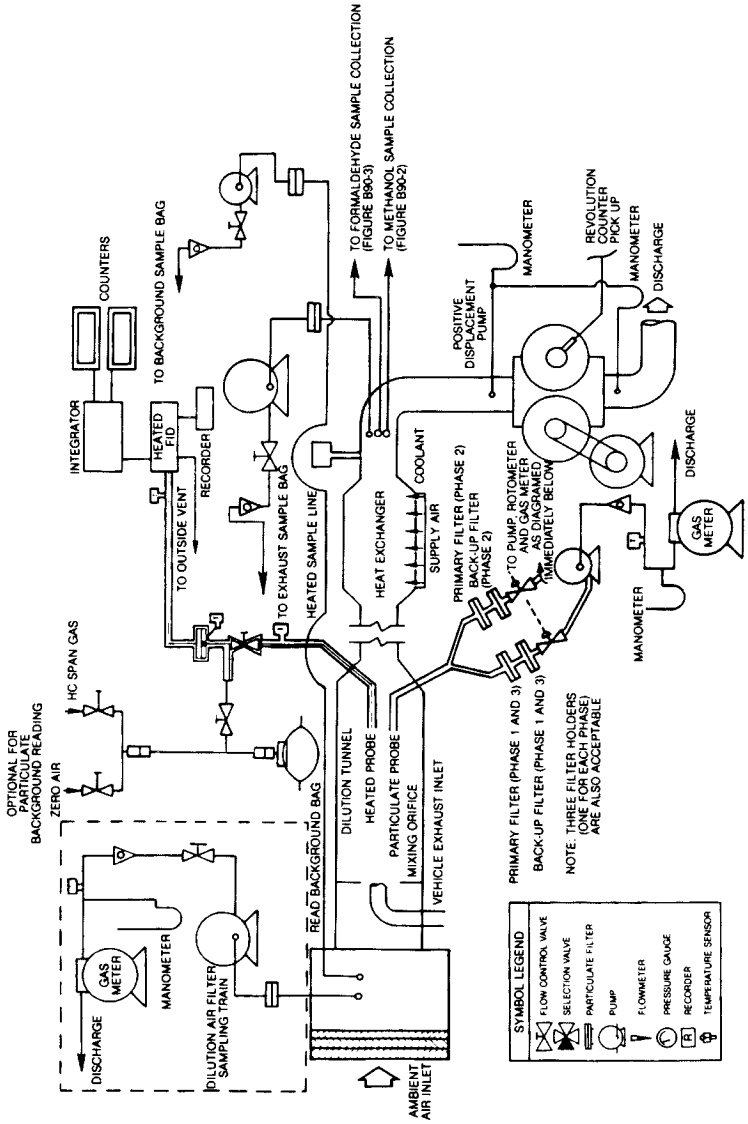

FIGURE B90-5
GASEOUS AND PARTICULATE EMISSIONS SAMPLING SYSTEM (PDP-CVS)

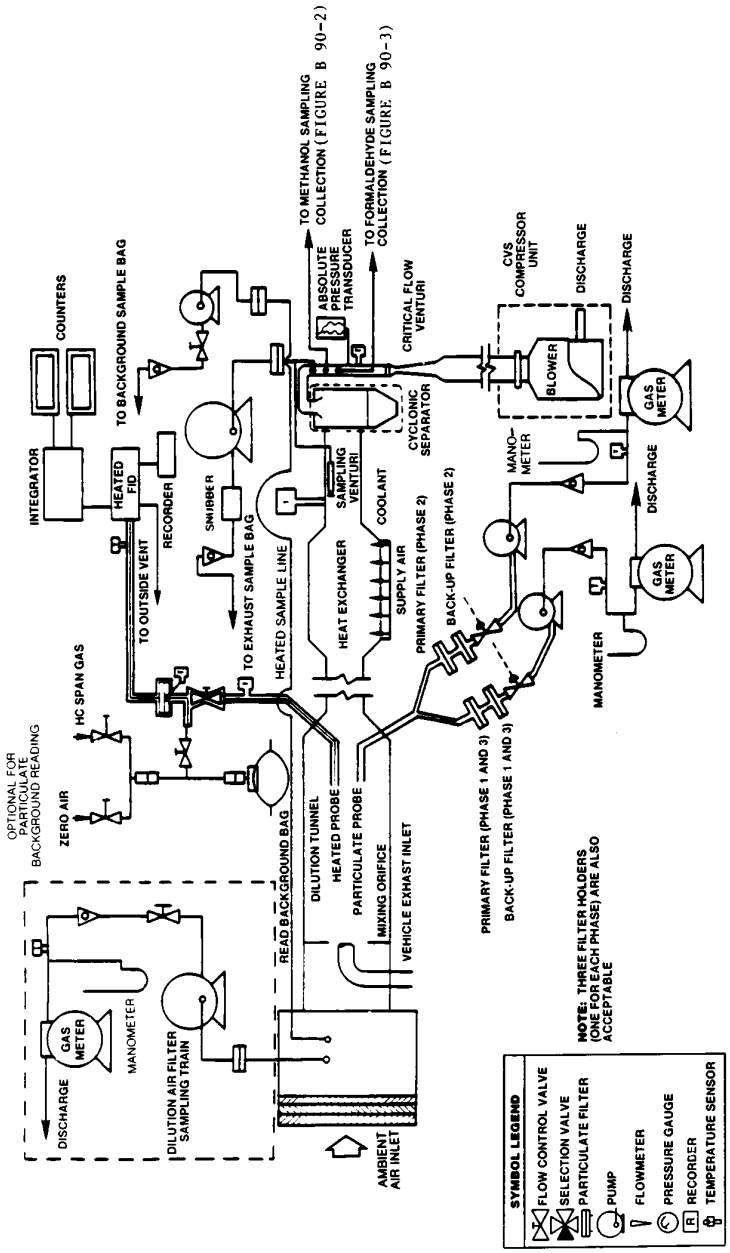

FIGURE B90-6

GASEOUS AND PARTICULATE EMISSIONS SAMPLING SYSTEM (CFV-CVS)

(2) Bag, HFID, and particulate sampling capabilities as shown in Figure B90–5 (or Figure B90–6) are required to provide both gaseous and particulate emissions sampling capabilities from a single system.

(3) Petroleum-fueled diesel vehicles require a heated flame ionization detector (HFID) (375°±20 °F (191°±11 °C)) sample for hydrocarbon analysis. The HFID sample must be taken directly from the diluted exhaust stream through a heated probe in the dilution tunnel.

(4) Methanol-fueled vehicles require the use of a heated flame ionization detector (HFID) (235°±15 °F (113°±8 °C)) for hydrocarbon analysis. With an HFID, the hydrocarbon analysis can be made on the bag sample and the methanol and formaldehyde analyses are performed on the samples collected for these purposes (Figures B90–2 and B90–3). NOTE: For 1990 through 1994 model year methanol-fueled vehicles, methanol and formaldehyde sampling may be omitted provided the bag sample is analyzed using a HFID calibrated with methanol.

(5) Methanol-fueled vehicles require either:

(i) A tailpipe to dilution tunnel duct of unrestricted length maintained at 235°±15 °F (113°±8 °C) through heating and cooling as required; or

(ii) Using short duct (up to 12 feet long) constructed of smooth wall pipe with a minimum of flexible sections maintained at 235°±15 °F (113°± °C) prior to the test and during breaks in testing (insulation may remain in place and/or heating may occur during testing provided maximum temperature is not exceeded); or

(iii) Using a smooth wall duct less than five feet long with no required heating, or

(iv) Omitting the duct and performing the exhaust gas dilution function at the vehicle tailpipe exit.

(6) Since various configurations can produce equivalent results, exact conformance with these drawings is not required. Additional components such as instruments, valves, solenoids, pumps, and switches may be used to provide additional information and coordinate the functions of the component systems.

(7) Other sampling systems may be used if shown to yield equivalent results and if approved in advance by the Administrator.

(b) *Component description—petroleum-fueled diesel vehicles.* The components necessary for petroleum fueled diesel vehicle exhaust sampling shall meet the following requirements:

(1) The PDP–CVS, Figure B90–5, shall conform to all of the requirements listed for the exhaust gas PDP–CVS (§ 86.109(b)), with one exception: a flow rate of sufficient volume is required to maintain the diluted exhaust stream, from which the particulate sample flow is taken, at a temperature of 125 °F (52 °C) or less.

(2) The CFV sample system, Figure B90–6, shall conform to all of the requirements listed for the exhaust gas CFV sample system (§ 86.109(c)), with four exceptions:

(i) A flow rate of sufficient volume is required to maintain the diluted exhaust stream, from which the particulate sample flow is taken, at a temperature of 125 °F (52 °C) or less.

(ii) A heat exchanger is required.

(iii) The gas mixture temperature, measured at a point immediately ahead of the critical flow venturi, shall be within ±20 °F (11 °C) of the designed operating temperature at the start of the test. The gas mixture temperature variation from its value at the start of the test shall be limited to ±20 °F (11 °C) during the entire test. The temperature measuring system shall have an accuracy and precision of ±2 °F (1.1 °C).

(iv) The cyclonic separator is optional.

(3) The transfer of heat from the vehicle exhaust gas shall be minimized between the point where it leaves the vehicle tailpipe(s) and the point where it enters the dilution tunnel airstream. To accomplish this, a short length (not more than 12 feet (365 cm) if uninsulated, or not more than 20 feet (610 cm) if insulated) of smooth stainless steel tubing from the tailpipe to the dilution tunnel is required. This tubing shall have a maximum inside diameter of 4.0 inches (10.2 cm). Short sections of flexible tubing at connection points are allowed.

(4) The vehicle exhaust shall be directed downstream at the point where it is introduced into the dilution tunnel.

(5) The dilution air shall be between 68 °F (20 °C) and 86 °F (30 °C) during the test.

(6) The dilution tunnel shall be:

(i) Sized to permit development of turbulent flow (Reynold's No. >>4000) and complete mixing of the exhaust and dilution air between the mixing orifice and each of the two sample probes (*i.e.,* the particulate probe and the heated HC sample probe). It is recommended that uniform mixing be demonstrated by the user.

(ii) At least 8.0 inches (20.3 cm) in diameter.

(iii) Constructed of electrically conductive material which does not react with the exhaust components.

(iv) Grounded.

(7) The temperature of the diluted exhaust stream inside of the dilution tunnel shall be sufficient to prevent water condensation. However, the sample zone dilute exhaust temperature shall not exceed 125 °F (52 °C) at any time during the test.

(8) The particulate sample probe shall be:

(i) Installed facing upstream at a point where the dilution air and exhaust are well mixed (*i.e.,* near the tunnel centerline, approximately 10 tunnel diameters downstream from the point where the exhaust enters the dilution tunnel).

(ii) Sufficiently distant (radially) from the total hydrocarbon probe so as to be free from the influence of any wakes or eddies produced by the total hydrocarbon probe.

(iii) 0.5 inch (1.27 cm) minimum inside diameter.

(iv) The distance from the sampling tip to the filter holder shall be at least 5 probe diameters (for filters located inside of the tunnel), but not more than 40.0 inches (102 cm) for filters located outside of the dilution tunnel.

(v) Free from sharp bends.

(vi) Configured so that a clean particulate filter (including back-up filter) can be selected simultaneously with the selection of an empty gaseous emissions bag.

(9) The flow rate through the particulate probe shall be maintained to a constant value within ±5 percent of the set flow rate.

(10) The particulate sample pump shall be located sufficiently distant from the dilution tunnel so that the inlet gas temperature is maintained at a constant temperature (±5.0 °F (2.8 °C)).

(11) The gas meters or flow instrumentation shall be located sufficiently distant from the tunnel so that the inlet gas temperature remains constant (±5.0 °F (2.8 °C)).

(12) The total hydrocarbon probe shall be:

(i) Installed facing upstream at a point where the dilution air and exhaust are well mixed (*i.e.,* approximately 10 tunnel diameters downstream from the point where the exhaust enters the dilution tunnel).

(ii) Sufficiently distant (radially) from the particulate probe so as to be free from the influence of any wakes or eddies produced by the particulate probe.

(iii) Heated and insulated over the entire length to maintain a 375°±20 °F (191°±11 °C) *wall* temperature.

(iv) 0.19 in. (0.48 cm) minimum inside diameter.

(13) It is intended that the total hydrocarbon probe be free from cold spots (*i.e.,* free from spots where the probe *wall* temperature is less than 355 °F). This will be determined by a temperature sensor located on a section of the probe wall outside of the dilution tunnel. The temperature sensor shall be insulated from any heating elements on the probe. The sensor shall have an accuracy and precision of ±2 °F (1.1 °C).

(14) The dilute exhaust gas flowing in the total hydrocarbon sample system shall be:

(i) At 375 °F±10 °F (191 °C±6 °C) immediately before the heated filter. This will be determined by a temperature sensor located immediately upstream of the filter. The sensor shall have an accuracy and precision of ±2 °F (1.1 °C).

(ii) At 375 °F±10 °F (191 °C±6 °C) immediately before the HFID. This will be determined by a temperature sensor located at the exit of the heated sample line. The sensor shall have an accuracy and precision of ±2 °F (1.1 °C).

(15) It is intended that the dilute exhaust gas flowing in the total hydrocarbon sample system be between 365 °F and 385 °F (185 °C and 197 °C).

(c) *Component description—methanol-fueled diesel vehicles.* The components necessary for methanol-fueled diesel

vehicle exhaust sampling shall meet the following requirements:

(1) The PDP–CVS, Figure B90–5 shall conform to all of the requirements listed for the exhaust gas PDP–CVS (§ 86.109 (a)(3) and (b)), with one exception: a flow rate of sufficient volume is required to maintain the diluted exhaust stream, from which the particulate sample flow is taken, at a temperature of 125 °F (52 °C) or less and shall prevent the condensation of water vapor in the dilution tunnel.

(2) The CFV sample system, Figure B90–6 shall conform to all of the requirements listed for the exhaust gas CFV sample system (§ 86.109 (a)(4) and (c)), with four exceptions:

(i) A flow rate of sufficient volume is required to maintain the diluted exhaust stream, from which the particulate sample flow is taken, at a temperature of 125 °F (52 °C) or less and shall prevent the condensation of water vapor in the dilution tunnel.

(ii) A heat exchanger is required.

(iii) The gas mixture temperature, measured at a point immediately ahead of the critical flow venturi, shall be within ±20 °F (11 °C) of the designed operating temperature at the start of the test. The gas mixture temperature variation from its value at the start of the test shall be limited to ±20 °F (11 °C) during the entire test. The temperature measuring system shall have an accuracy and precision of ±2 °F (1.1 °C).

(iv) The cyclonic separator is optional.

(3) Losses of methanol due to condensation of water in the duct connecting the vehicle tail pipe to the dilation tunnel must be minimized. This may be accomplished by:

(i) The use of a duct of unrestricted length maintained at 235°±15 °F (113°±8 °C) through heating and cooling as required, or

(ii) The use of a short duct (up to 12 feet long) constructed of smooth wall pipe with a minimum of flexible sections maintained at 235°±15 °F (113°±8 °C) prior to the test and during breaks in testing (insulation may remain in place and/or heating may occur during testing provided maximum temperature is not exceeded); or

(iii) Using a smooth wall duct less than five feet long with no required heating, or

(iv) Omitting the duct and performing the exhaust gas dilution function at the vehicle tailpipe exit.

(4) The vehicle exhaust shall be directed downstream at the point where it is introduced into the dilution tunnel.

(5) The dilution air shall be between 68 °F (20 °C) and 86 °F (30 °C) during the test.

(6) The dilution tunnel shall be:

(i) Sized to permit development of turbulent flow (Reynold's No. >>4000) and complete mixing of the exhaust and dilution air between the mixing orifice and the particulate sample probe. It is recommended that uniform mixing be demonstrated by the user.

(ii) At least 8.0 inches (20.3 cm) in diameter.

(iii) Constructed of electrically conductive material which does not react with the exhaust components.

(iv) Grounded.

(7) The temperature of the diluted exhaust stream inside of the dilution tunnel shall be sufficient to prevent water condensation. However, the sample zone dilute exhaust temperature shall not exceed 125 °F (52 °C) at any time during the test.

(8) The particulate sample probe shall be:

(i) Installed facing upstream at a point where the dilution air and exhaust are well mixed (*i.e.*, near the tunnel centerline, approximately 10 tunnel diameters downstream from the point where the exhaust enters the dilution tunnel).

(ii) Sufficiently distant (radially) from the total hydrocarbon probe so as to be free from the influence of any wakes or eddies produced by the total hydrocarbon probe.

(iii) 0.5 inch (1.27 cm) minimum inside diameter.

(iv) The distance from the sampling tip to the filter holder shall be at least 5 probe diameters (for filters located inside of the tunnel), but not more than 40.0 inches (102 cm) for filters located outside of the dilution tunnel.

(v) Free from sharp bends.

(vi) Configured so that a clean particulate filter (including back up filter)

can be selected simultaneously with the selection of an empty gaseous emissions bag.

(9) The flow rate through the particulate probe shall be maintained to a constant value within ±5 percent of the set flow rate.

(10) The particulate sample pump shall be located sufficiently distant from the dilution tunnel so that the inlet gas temperature is maintained at a constant temperature (±5.0 °F (2.8 °C)).

(11) The gas meters or flow instrumentation shall be located sufficiently distant from the tunnel so that the inlet gas temperature remains constant (±5.0 °F (2.8 °C)).

(12) The hydrocarbon probe shall be:

(i) Installed facing upstream at a point where the dilution air and exhaust are well mixed (*i.e.*, approximately 10 tunnel diameters downstream from the point where the exhaust enters the dilution tunnel).

(ii) Sufficiently distant (radially) from the particulate probe so as to be free from the influence of any wakes or eddies produced by the particulate probe.

(iii) Heated and insulated over the entire length to maintain a 235°±15 °F (113°±8 °C) *wall* temperature.

(iv) 0.19in. (0.48 cm) minimum inside diameter.

(13) It is intended that the total hydrocarbon probe be free from cold spots (*i.e.*, free from cold spots where the probe *wall* temperature is less than 220 °F.) This will be determined by a temperature sensor located on a section of the probe wall outside of the dilution tunnel. The temperature sensor shall be insulated from any heating elements on the probe. The sensor shall have an accuracy and precision of ±2 °F (1.1 °C).

(14) The dilute exhaust gas flowing in the hydrocarbon sample system shall be:

(i) At 235 °F±15 °F (113 °C±8 °C) immediately before the heated filter. This will be determined by a temperature sensor located immediately upstream of the filter. The sensor shall have an accuracy and precision of ±2 °F (1.1 °C).

(ii) At 235 °F±15 °F (113 °C ±8 °C) immediately before the HFID. This will be determined by a temperature sensor located at the exit of the heated sample line. The sensor shall have an accuracy and precision of ±2 °F (1.1 °C).

(15) It is intended that the dilute exhaust gas flowing in the hydrocarbon sample system be between 220 °F and 250 °F (105 °C and 121 °C).

(16) For methanol-fueled vehicles, bag sampling procedures for the measurement of hydrocarbons as described in § 86.109 may be employed.

(d) *Filters, particulate sampling.* (1) Filter acceptance criteria. Valid diesel particulate net filter weights shall be accepted according to the following criteria:

(i) During each phase of the UDDS, dilute exhaust will be simultaneously sampled by paired primary test and back-up test filters.

(ii) The back-up filter holder shall be located 3 to 4 inches downstream of the primary filter holder.

(iii) The net weight of particulate material collected on each primary test filter and each back-up test filter shall be determined by the procedure outlined in § 86.139.

(iv) A ratio of net weights will be determined by the following formula:

$$\text{Ratio of net weights} = \frac{(\text{Mass Particulate})_{\text{primary filter}}}{(\text{Mass Particulate})_{\text{primary filter}} + (\text{Mass Particulate})_{\text{back-up filter}}}$$

(v) If the ratio is greater than 0.95, then particulate emissions calculations are based on the net weight of the primary filter only.

(vi) If the ratio is less than 0.95, then particulate emissions calculations are based on the combined net weights of the back-up test filter and the primary test filter.

(2) The particulate filter must have a minimum 47 mm diameter (37 mm stain area). Larger diameter filters are

also acceptable. (Larger diameter filters may be desirable in order to reduce the pressure drop across the filter when testing vehicles which produce large amounts of particulate.)

(3) The recommended minimum loading on the primary 47 mm filter is 0.5 milligrams. Equivalent loadings (i.e., mass/stain area) are recommended for larger filters.

(4) Fluorocarbon coated glass fiber filters or fluorocarbon-based (membrane) filters are required for particulate collection.

[54 FR 14507, Apr. 11, 1989]

§86.110–94 Exhaust gas sampling system; diesel-cycle vehicles, and Otto-cycle vehicles requiring particulate emissions measurements.

Section 86.110–94 includes text that specifies requirements that differ from §86.110–90. Where a paragraph in §86.110–90 is identical and applicable to §86.110–94, this may be indicated by specifying the corresponding paragraph and the statement ''[Reserved]. For guidance see §86.110–90.'' Where a corresponding paragraph of §86.110–90 is not applicable, this is indicated by the statement ''[Reserved].''

(a) *General.* The exhaust gas sampling system described in this paragraph is designed to measure the true mass of both gaseous and particulate emissions in the exhaust of either diesel-cycle or Otto-cycle light-duty vehicles and light-duty trucks. This system utilizes the CVS concept (described in §86.109) of measuring mass emissions. The mass of gaseous emissions is determined from the sample concentration and total flow over the test period. The mass of particulate emissions is determined from a proportional mass sample collected on a filter and from the total flow over the test period. General requirements are as follows:

(1) This sampling system requires the use of a PDP–CVS, CFV–CVS (or a CFV–EFC–CVS), sample system with heat exchanger connected to a dilution tunnel. The heat exchanger is not required for the CFV–CVS or EFC–CFV–CVS if electronic flow controllers are used to maintain proportionality for the particulate sample. Figure B94–5 is a schematic drawing of the PDP system. Figure B94–6 is a schematic drawing of the CFV–CVS system. (Methanol-fueled Otto-cycle vehicles may be tested using this test equipment, without measuring particulate emissions.)

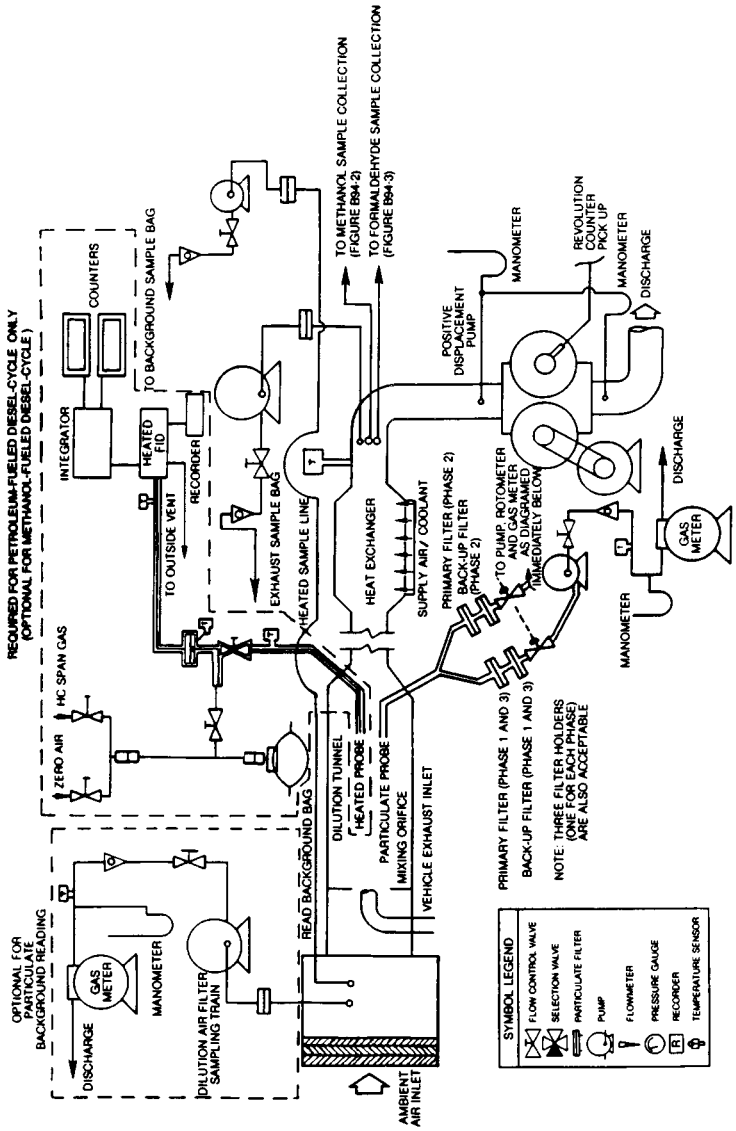

FIGURE B94-5 EXHAUST GAS SAMPLING SYSTEM (PDP-CVS)
(FOR VEHICLES REQUIRING PARTICULATE MEASUREMENT)

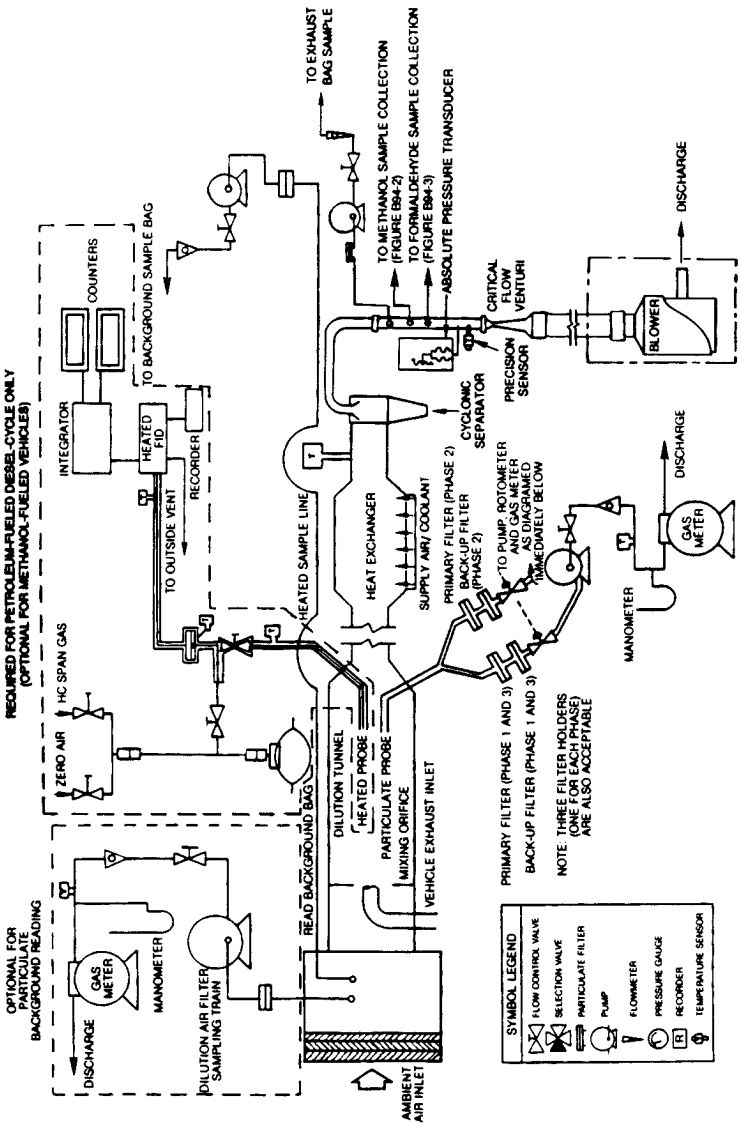

FIGURE B94-6 EXHAUST GAS SAMPLING SYSTEM (CFV-CVS)
(FOR VEHICLES REQUIRING PARTICULATE MEASUREMENT)

(2) Bag, continuous HFID (required for petroleum-fueled diesel-cycle and optional for methanol-fueled, natural gas-fueled and liquefied petroleum gas-fueled diesel-cycle vehicles), and particulate sampling capabilities as shown in Figure B94–5 (or Figure B94–6) are required to provide both gaseous and particulate emissions sampling capabilities from a single system.

(3) Petroleum-fueled diesel-cycle vehicles require a heated flame ionization detector (HFID) (375 °±20 °F (191 °±11 °C)) sample for total hydrocarbon (THC) analysis. The HFID sample must

be taken directly from the diluted exhaust stream through a heated probe in the dilution tunnel.

(4) Methanol-fueled vehicles require the use of a heated flame ionization detector (HFID) (235 °±15 °F (113 °±8 °C)) for hydrocarbon analysis. With an HFID, the hydrocarbon analysis can be made on the bag sample and the methanol and formaldehyde analyses are performed on the samples collected for these purposes (Figures B94–2 and B94–3).

NOTE: For 1990 through 1994 model year methanol-fueled vehicles, methanol and formaldehyde sampling may be omitted provided the bag sample is analyzed using a HFID calibrated with methanol.

(5) For methanol-fueled vehicles, the vehicle tailpipe-to-dilution tunnel connection shall be made by:

(i) A tailpipe to dilution tunnel duct of unrestricted length maintained at a temperature above the dew point of the mixture, but below 250 °F (121 °C) through heating and cooling as required; or

(ii) Using a short duct (up to 12 feet long) constructed of smooth wall pipe with a minimum of flexible sections maintained at a temperature above the dew point of the mixture, but below 250 °F (121 °C) prior to the test and during breaks in testing (insulation may remain in place and or heating may occur during the testing provided the maximum temperature is not exceeded); or

(iii) Using smooth wall duct less than five feet long with no required heating. A maximum of two short flexible connectors are allowed under this option; or

(iv) By omitting the duct and performing the exhaust gas dilution function at the vehicle tailpipe exit.

(6) For natural gas-fueled and liquefied petroleum gas-fueled diesel vehicles either a heated flame ionization detector (HFID) [375°±20 °F (191°±11 °C)] or a non-heated flame ionization detector may be used for hydrocarbon analysis.

(7) Since various configurations can produce equivalent results, exact conformance with these drawings is not required. Additional components such as instruments, valves, solenoids, pumps, and switches may be used to provide additional information and coordinate the functions of the component systems.

(8) Other sampling systems may be used if shown to yield equivalent or superior results and if approved in advance by the Administrator.

(b) *Component description—petroleum-fueled, natural gas-fueled and liquefied petroleum gas-fueled vehicles.* The components necessary for petroleum-fueled, natural gas-fueled and liquefied petroleum gas-fueled vehicle exhaust sampling shall meet the following requirements:

(1) The PDP–CVS, Figure B94–5, shall contain a proportional particulate sampling system, and shall conform to all of the requirements listed for the exhaust gas PDP–CVS (§ 86.109(b)), with one exception: a flow rate of sufficient volume is required to maintain the diluted exhaust stream, from which the particulate sample flow is taken, at a temperature of 125 °F (52 °C) or less.

(2) The CFV sample system, Figure B94–6, shall contain a proportional particulate sampling system, and shall conform to all of the requirements listed for the exhaust gas CFV sample system (§ 86.109(c)), except for the following:

(i) A flow rate of sufficient volume is required to maintain the diluted exhaust stream, from which the particulate sample flow is taken, at a temperature of 125 °F (52 °C) or less.

(ii) If a constant volume particulate sample is collected, a heat exchanger is required.

(iii) If a heat exchanger is used, the gas mixture temperature, measured at a point immediately ahead of the critical flow venturi, shall be within ± 20 °F (11 °C) of the designed operating temperature at the start of the test. The gas mixture temperature variation from its value at the start of the test shall be limited to ± 20 °F (11 °C) during the entire test. The temperature measuring system shall have an accuracy and precision of ± 2 °F (1.1 °C).

(iv) The cyclonic separator is optional.

(3) For gasoline-fueled, natural gas-fueled and liquefied petroleum gas-fueled Otto-cycle and petroleum-fueled, natural gas- fueled and liquefied petroleum gas-fueled diesel-cycle vehicles,

the transfer of heat from the vehicle exhaust gas shall be minimized between the point where it leaves the vehicle tailpipe(s) and the point where it enters the dilution tunnel airstream. To accomplish this, a short length (not more than 12 feet (365 cm) if uninsulated, or not more than 20 feet (610 cm) if insulated) of smooth stainless steel tubing from the tailpipe to the dilution tunnel is required. This tubing shall have a maximum inside diameter of 4.0 inches (10.2 cm). Short sections of flexible tubing at connection points are allowed.

(4) The vehicle exhaust shall be directed downstream at the point where it is introduced into the dilution tunnel.

(5) The dilution air shall be between 68 °F (20 °C) and 86 °F (30 °C) during the test.

(6) The dilution tunnel shall be:

(i) Sized to permit development of turbulent flow (Reynold's No. <<4000) and complete mixing of the exhaust and dilution air between the mixing orifice and each of the two sample probes (i.e., the particulate probe and the heated THC sample probe). It is recommended that uniform mixing be demonstrated by the user.

(ii) At least 8.0 inches (20.3 cm) in diameter.

(iii) Constructed of electrically conductive material which does not react with the exhaust components.

(iv) Grounded.

(7) The temperature of the diluted exhaust stream inside of the dilution tunnel shall be sufficient to prevent water condensation. However, the sample zone dilute exhaust temperature shall not exceed 125 °F (52 °C) at any time during the test.

(8) The particulate sample probe shall be:

(i) Installed facing upstream at a point where the dilution air and exhaust are well mixed (i.e., near the tunnel centerline, approximately 10 tunnel diameters downstream from the point where the exhaust enters the dilution tunnel).

(ii) Sufficiently distant (radially) from the THC probe (when the THC probe is required) so as to be free from the influence of any wakes or eddies produced by the THC probe.

(iii) 0.5 inch (1.27 cm) minimum inside diameter.

(iv) The distance from the sampling tip to the filter holder shall be at least 5 probe diameters (for filters located inside of the tunnel), but not more than 40.0 inches (102 cm) for filters located outside of the dilution tunnel.

(v) Free from sharp bends.

(vi) Configured so that a clean particulate filter (including back-up filter) can be selected simultaneously with the selection of an empty gaseous emissions bag.

(9) The flow rate through the particulate probe shall be maintained to a constant value within ±5 percent of the set flow rate.

(10) The particulate sample pump shall be located sufficiently distant from the dilution tunnel so that the inlet gas temperature is maintained at a constant temperature (±5.0 °F (2.8 °C)).

(11) The gas meters or flow instrumentation shall be located sufficiently distant from the tunnel so that the inlet gas temperature remains constant (±5.0 °F (2.8 °C)).

(12) The THC probe (when the THC probe is required) shall be:

(i) Installed facing upstream at a point where the dilution air and exhaust are well mixed (i.e., approximately 10 tunnel diameters downstream from the point where the exhaust enters the dilution tunnel).

(ii) Sufficiently distant (radially) from the particulate probe so as to be free from the influence of any wakes or eddies produced by the particulate probe.

(iii) Heated and insulated over the entire length to maintain a 375 °±20 °F (191 °±11 °C) wall temperature.

(iv) 0.19 in. (0.48 cm) minimum inside diameter.

(13) It is intended that the THC probe be free from cold spots (i.e., free from spots where the probe wall temperature is less than 355 °F). This will be determined by a temperature sensor located on a section of the probe wall outside of the dilution tunnel. The temperature sensor shall be insulated from any heating elements on the probe. The sensor shall have an accuracy and precision of ±2 °F (1.1 °C).

(14) The dilute exhaust gas flowing in the THC sample system shall be:

(i) At 375 °F±10 °F (191 °C±6 °C) immediately before the heated filter. This will be determined by a temperature sensor located immediately upstream of the filter. The sensor shall have an accuracy and precision of ±2 °F (1.1 °C).

(ii) At 375 °F±10 °F (191 °C ±6 °C) immediately before the HFID. This will be determined by a temperature sensor located at the exit of the heated sample line. The sensor shall have an accuracy and precision of ±2 °F (1.1 °C).

(15) It is intended that the dilute exhaust gas flowing in the THC sample system be between 365 °F and 385 °F (185 °C and 197 °C).

(c) *Component description—methanol-fueled vehicles.* The components necessary for methanol-fueled vehicle exhaust sampling shall meet the following requirements:

(1) The PDP–CVS, Figure B94–5, shall contain a proportional particulate sampling system, and shall conform to all of the requirements listed for the exhaust gas PDP–CVS (§ 86.109), with one exception: a flow rate of sufficient volume is required to maintain the diluted exhaust stream, from which the particulate sample flow is taken, at a temperature of 125 °F (52 °C) or less.

(2) The CFV–CVS sample system, Figure B94–6, shall contain a proportional particulate sampling system, and shall conform to all of the requirements listed for the exhaust gas CFV sample system (§ 86.109), except for the following:

(i) A flow rate of sufficient volume is required to maintain the diluted exhaust stream, from which the particulate sample flow is taken, at a temperature of 125 °F (52 °C) or less.

(ii) If a constant volume particulate sample is collected, a heat exchanger is required.

(iii) If a heat exchanger is used, the gas mixture temperature, measured at a point immediately ahead of the critical flow venturi, shall be within ± 20 °F (11 °C) of the designed operating temperature at the start of the test. The gas mixture temperature variation from its value at the start of the test shall be limited to ± 20 °F (11 °C) during the entire test. The temperature measuring system shall have an accuracy and precision of ± 2 °F (1.1 °C).

(iv) The cyclonic separator is optional.

(3) The EFC–CFV–CVS sample system shall conform to all of the requirements listed for the exhaust gas EFC sample system (§ 86.109) with three exceptions:

(i) A flow rate of sufficient volume is required to maintain the diluted exhaust stream, from which the particulate sample flow is taken, at a temperature of 125 °F (52 °C) or less.

(ii) A proportional particulate sample shall be collected using an electronic flow controller that meets the performance criteria listed in § 86.109 for methanol and formaldehyde EFC systems.

(iii) The cyclonic separator is optional.

(4) Losses of methanol due to condensation of water in the duct connecting the vehicle tail pipe to the dilution tunnel must be eliminated. This may be accomplished by:

(i) The use of a duct of unrestricted length maintained at a temperature above the maximum dew point of the exhaust, but below 250 °F (121 °C), through heating and cooling as required; or

(ii) The use of a short duct (up to 12 feet long) constructed of smooth wall pipe with a minimum of flexible sections maintained at a temperature above the maximum dew point of the exhaust, but below 250 °F (121 °C), prior to the test and during breaks in testing (insulation may remain in place and/or heating may occur during testing provided maximum temperature is not exceeded); or

(iii) Using smooth wall duct less than five feet long with no required heating. A maximum of two short flexible connectors are allowed under this option; or

(iv) Omitting the duct and performing the exhaust gas dilution function at the vehicle tailpipe exit.

(5) The vehicle exhaust shall be directed downstream at the point where it is introduced into the dilution tunnel.

(6) The dilution air shall be between 68 °F (20 °C) and 86 °F (30 °C) during the

test (unless the requirements of § 86.109–94(b)(4) are also met).

(7) The dilution tunnel shall be:

(i) Sized to permit development of turbulent flow (Reynold's No. >>4000) and complete mixing of the exhaust and dilution air between the mixing orifice and the particulate sample probe. It is recommended that uniform mixing be demonstrated by the user.

(ii) At least 8.0 inches (20.3 cm) in diameter.

(iii) Constructed of electrically conductive material which does not react with the exhaust components.

(iv) Grounded.

(8) The temperature of the diluted exhaust stream inside of the dilution tunnel shall be sufficient to prevent water condensation. However, the sample zone dilute exhaust temperature shall not exceed 125 °F (52 °C) at any time during the test.

(9) The particulate sample probe shall be:

(i) Installed facing upstream at a point where the dilution air and exhaust are well mixed (i.e., near the tunnel centerline, approximately 10 tunnel diameters downstream from the point where the exhaust enters the dilution tunnel).

(ii) Sufficiently distant (radially) from the THC probe so as to be free from the influence of any wakes or eddies produced by the THC probe.

(iii) 0.5 inch (1.27 cm) minimum inside diameter.

(iv) The distance from the sampling tip to the filter holder shall be at least five probe diameters (for filters located inside the tunnel), but not more than 40.0 inches (102 cm) for filters located outside of the dilution tunnel.

(v) Free from sharp bends.

(vi) Configured so that a clean particulate filter (including back up filter) can be selected simultaneously with the selection of an empty gaseous emissions bag.

(10) The flow rate through the particulate probe shall be maintained to a constant value within ±5 percent of the set flow rate.

(11) The particulate sample pump shall be located sufficiently distant from the dilution tunnel so that the inlet gas temperature is maintained at a constant temperature (± 5.0 °F (2.8 °C)).

(12) The gas meters or flow instrumentation shall be located sufficiently distant from the tunnel so that the inlet gas temperature remains constant (± 5.0 °F (2.8 °C)).

(13) The hydrocarbon probe shall be:

(i) Installed facing upstream at a point where the dilution air and exhaust are well mixed (i.e., approximately ten tunnel diameters downstream from the point where the exhaust enters the dilution tunnel).

(ii) Sufficiently distant (radially) from the particulate probe so as to be free from the influence of any wakes of eddies produced by the particulate probe.

(iii) Heated and insulated over the entire length to maintain a wall temperature more than 5 °F (3 °C) above the maximum dew point of the sample, but below 250 °F (121 °C).

(iv) 0.19 in. (0.48 cm) minimum inside diameter.

(14) It is intended that the THC probe be free from cold spots (i.e., free from cold spots where the probe wall temperature is less than 5 °F (3 °C) above the maximum dew point of the sample.) This will be determined by a temperature sensor located on a section of the probe wall outside of the dilution tunnel. The temperature sensor shall be insulated from any heating elements on the probe. The sensor shall have an accuracy and precision of ± 2 °F (1.1 °C).

(15) The dilute exhaust gas flowing in the hydrocarbon sample system shall be:

(i) At 235 °F ± 15 °F (113 °C ± 8 °C) immediately before the heated filter. This will be determined by a temperature sensor located immediately upstream of the filter. The sensor shall have an accuracy and precision of ± 2 °F (1.1 °C).

(ii) At 235° ± 15 °F (113 °C ± 8 °C) immediately before the HFID. This will be determined by a temperature sensor located at the exit of the heated sample line. The sensor shall have an accuracy and precision of ± 2 °F (1.1 °C).

(16) It is intended that the dilute exhaust gas flowing in the hydrocarbon sample system between 220 °F and 250 °F (105 °C and 121 °C).

(17) For methanol-fueled vehicles, bag sampling procedures for the measurement of hydrocarbons as described in § 86.109 may be employed.

(d) [Reserved]. For guidance see § 86.110–90.

[56 FR 25767, June 5, 1991, as amended at 59 FR 48505, Sept. 21, 1994; 60 FR 34342, June 30, 1995]

§ 86.111–90 Exhaust gas analytical system.

(a) *Schematic drawings.* Figure B90–7 is a schematic drawing of the exhaust gas analytical system for analysis of hydrocarbons (HC) (hydrocarbons plus methanol in the case of methanol-fueled vehicles), carbon monoxide (CO), carbon dioxide (CO_2), and oxides of nitrogen (NO_X). The schematic diagram of the hydrocarbon analysis train for diesel vehicles (and for hydrocarbons plus methanol for methanol-fueled diesel vehicles if continuous HFID analysis is employed) is shown as part of Figure B90–5 (or Figure B90–6). Since various configurations can produce accurate results, exact conformance with either drawing is not required. Additional components such as instruments, valves, solenoids, pumps and switches may be used to provide additional information and coordinate the functions of the component systems.

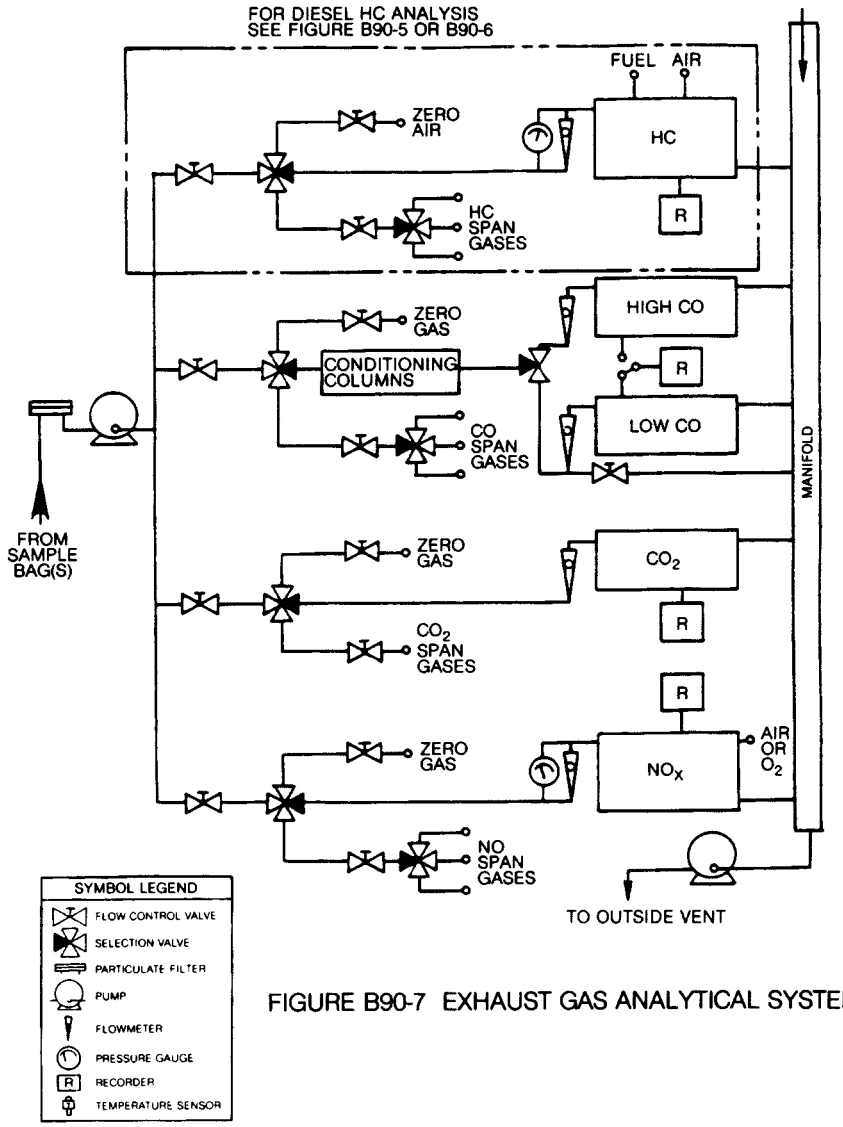

FIGURE B90-7 EXHAUST GAS ANALYTICAL SYSTEM

(b) *Major component description.* The exhaust gas analytical system for HC, CO, CO_2, and NO_X, Figure B90–7, consists of a flame ionization detector (FID) (heated, 235°±15 °F (113°±8 °C) for methanol-fueled vehicles) for the determination of hydrocarbons, non-dispersive infrared analyzers (NDIR) for the determination of carbon monoxide and carbon dioxide and a chemiluminescence analyzer (CL) for the determination of oxides of nitrogen. A heated flame ionization detector (HFID) is used for the continuous determination of hydrocarbons from petroleum-fueled diesel vehicles (may also be used with methanol-fueled diesel vehicles), Figure B90–5 (or B90–6).

The analytical system for methanol consists of a gas chromatograph (GC) equipped with a flame ionization detector. The analysis for formaldehyde is performed using high pressure liquid chromatography (HPLC) of 2,4-dinitrophenylhydrazine (DNPH) derivatives using ultraviolet (UV) detection. The exhaust gas analytical system shall conform to the following requirements:

(1) The CL requires that the nitrogen dioxide present in the sample be converted to nitric oxide before analysis. Other types of analyzers may be used if shown to yield equivalent results and if approved in advance by the Administrator.

(2) The carbon monoxide (CO) NDIR analyzer may require a sample conditioning column containing $CaSO_4$, or indicating silica gel to remove water vapor and containing ascarite to remove carbon dioxide from the CO analysis stream.

(i) If CO instruments which are essentially free of CO_2 and water vapor interference are used, the use of the conditioning column may be deleted, see §§ 86.122 and 86.144.

(ii) A CO instrument will be considered to be essentially free of CO_2 and water vapor interference if its response to a mixture of 3 percent CO_2 in N_2 which has been bubbled through water at room temperature produces an equivalent CO response, as measured on the most sensitive CO range, which is less than l percent of full scale CO concentration on ranges above 300 ppm full scale or less than 3 ppm on ranges below 300 ppm full scale, see § 86.122.

(3) For petroleum-fueled diesel vehicles (and if selected, for methanol-fueled diesel vehicles) a continuous hydrocarbon sample shall be measured using a heated analyzer train as shown in Figure B90–5 (or B90–6). The train shall include a heated probe, a heated continuous sampling line, a heated particulate filter and a heated hydrocarbon instrument (HFID) complete with heated pump, filter and flow control system.

(i) The response time of this instrument shall be less than 1.5 seconds for 90 percent of full scale response.

(ii) The continuous HC sample system may use an ''overflow'' zero and span system; see § 86.140–82(b)(4). In this type of system (figures B82–3A and B82–4A), zero or span gas is introduced into the heated sample line at a flow rate that exceeds the sample flow rate to the HFID. The excess gas overflows the sample probe into the dilution tunnel. This method assures that the reference gas enters HFID in the same concentration as the injected reference gas and at the same rate as the sample exhaust gas. In addition to zero and span checks, it may also be used to calibrate the HC analyzer per § 86.121–82(b). The overflow gas flow rate into the sample line shall be greater than 125 percent of the HFID flow rate with the CVS blower operating. A lower flow rate may be used if it has been experimentally shown to produce equivalent results and current dccumentation is maintained. The overflow gases shall enter the heated sample line as close as practicable to the outside surface of the dilution tunnel.

(iii) No other analyzers may draw a sample from the continuous HC sample probe, line or system, unless a common sample pump is used of all analyzers and the single sample line system design reflects good engineering practice.

(iv) Sample transport time from sampling point to inlet of instrument shall be less than 4 seconds.

(v) For petroleum-fueled diesel vehicles, the sample line and filter shall be heated to maintain a sample gas temperature of 375°±10 °F (191°±6 °C) before the filter and before the HFID.

(vi) For methanol-fueled diesel vehicles, the sample line and filter shall be heated to maintain a sample gas temperature of 235°±15 °F (113°±8 °C) before the filter and before the HFID.

(c) *Other analyzers and equipment.* Other types of analyzers and equipment may be used if shown to yield equivalent results and if approved in advance by the Administrator.

[54 FR 14512, Apr. 11, 1989]

§ 86.111–94 Exhaust gas analytical system.

Section 86.111–94 includes text that specifies requirements that differ from § 86.111–90. Where a paragraph in § 86.111–90 is identical and applicable to § 86.111–94, this may be indicated by specifying the corresponding paragraph and the statement ''[Reserved]. For

guidance see § 86.111–90.'' Where a corresponding paragraph of § 86.111–90 is not applicable, this is indicated by the statement ''[Reserved].''

(a) *Schematic drawings.* Figure B94–7 is a schematic drawing of the exhaust gas analytical system for samples from bag sampling systems for analysis of total hydrocarbon (THC) (hydrocarbon plus methanol in the case of methanol-fueled vehicles), methane (CH_4) (for vehicles subject to the NMHC and NMHCE standards), carbon monoxide (CO), carbon dioxide (CO_2), and oxides of nitrogen (NO_X). The schematic diagram of the continuous THC analysis train (and for THC plus methanol for methanol-fueled diesel-cycle vehicles) is shown as part of Figure B94–5 (or Figure B94–6). Since various configurations can produce accurate results, exact conformance with either drawing is not required. Additional components such as instruments, valves, solenoids, pumps, and switches may be used to provide additional information and coordinate the functions of the component systems.

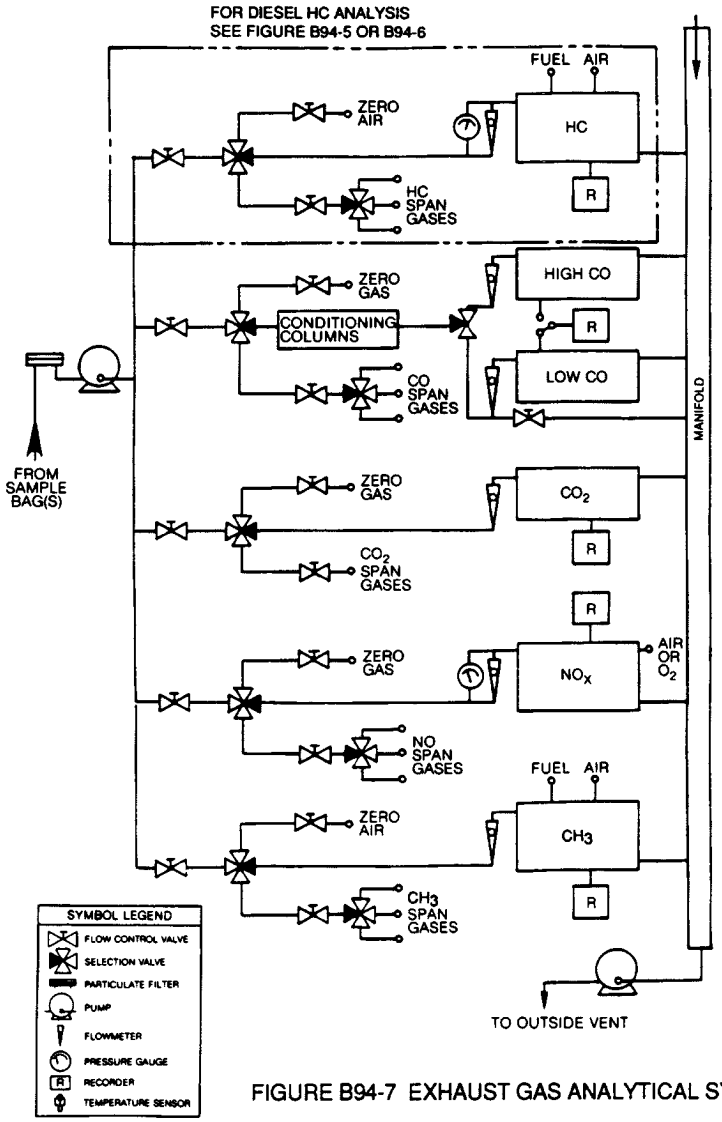

FIGURE B94-7 EXHAUST GAS ANALYTICAL SYSTEM

(b) *Major component description.* The exhaust gas analytical system, Figure B94–7, consists of a flame ionization detector (FID) (heated, 235 °±15 °F (113 °±8 °C) for methanol-fueled vehicles) for the determination of THC, a methane analyzer (consisting of a gas chromatograph combined with a FID) for the determination of CH_4 (for vehicles subject to the NMHC and NMHCE standards, where applicable), non-dispersive infrared analyzers (NDIR) for the determination of CO and CO_2 and a chemiluminescence analyzer (CL) for the determination of NO_X. A heated flame ionization detector (HFID) is used for the continuous determination of THC from petroleum-fueled diesel-

cycle vehicles (may also be used with methanol-fueled diesel-cycle vehicles), Figure B94–5 (or B94–6). The analytical system for methanol consists of a gas chromatograph (GC) equipped with a flame ionization detector. The analysis for formaldehyde is performed using high pressure liquid chromatography (HPLC) of 2,4-dinitrophenylhydrazine (DNPH) derivatives using ultraviolet (UV) detection. The exhaust gas analytical system shall conform to the following requirements:

(1) The CL requires that the nitrogen dioxide present in the sample be converted to nitric oxide before analysis. Other types of analyzers may be used if shown to yield equivalent results and if approved in advance by the Administrator.

(2) The carbon monoxide (CO) NDIR analyzer may require a sample conditioning column containing $CaSO_4$, or indicating silica gel to remove water vapor, and containing ascarite to remove carbon dioxide from the CO analysis stream.

(i) If CO instruments which are essentially free of CO_2 and water vapor interference are used, the use of the conditioning column may be deleted, see §§ 86.122 and 86.144.

(ii) A CO instrument will be considered to be essentially free of CO_2 and water vapor interference if its response to a mixture of 3 percent CO_2 in N_2 which has been bubbled through water at room temperature produces an equivalent CO response, as measured on the most sensitive CO range, which is less than 1 percent of full scale CO concentration on ranges above 300 ppm full scale or less than 3 ppm on ranges below 300 ppm full scale, see § 86.122.

(3) For petroleum-fueled diesel vehicles (and if selected, for methanol-fueled, natural gas-fueled and liquefied petroleum gas-fueled diesel vehicles) a continuous hydrocarbon sample shall be measured using a heated analyzer train as shown in Figure B90–5 (or B90–6). The train shall include a heated probe, a heated continuous sampling line, a heated particulate filter and a heated hydrocarbon instrument (HFID) complete with heated pump, filter and flow control system.

(i) The response time of this instrument shall be less than 1.5 seconds for 90 percent of full scale response.

(ii) The continuous THC sample system may use an ''overflow'' zero and span system; see § 86.140–82(b)(4). In this type of system (figures B82–3A and B82–4A), zero or span gas is introduced into the heated sample line at a flow rate that exceeds the sample flow rate to the HFID. The excess gas overflows the sample probe into the dilution tunnel. This method assures that the reference gas enters HFID in the same concentration as the injected reference gas and at the same rate as the sample exhaust gas. In addition to zero and span checks, it may also be used to calibrate the THC analyzer per § 86.121–82(b). The overflow gas flow rate into the sample line shall be greater than 125 percent of the HFID flow rate with the CVS blower operating. A lower flow rate may be used if it has been experimentally shown to produce equivalent results and current documentation is maintained. The overflow gases shall enter the heated sample line as close as practicable to the outside surface of the dilution tunnel.

(iii) No other analyzers may draw a sample from the continuous THC sample probe, line, or system, unless a common sample pump is used of all analyzers and the single sample line system design reflects good engineering practice.

(iv) Sample transport time from sampling point to inlet of instrument shall be less than 4 seconds.

(v) For petroleum-fueled, natural gas-fueled and liquefied petroleum gas-fueled diesel vehicles, the sample line and filter shall be heated to maintain a sample gas temperature of 375° ±10 °F (191° ±6 °C) before the filter and before the HFID.

(vi) For methanol-fueled diesel-cycle vehicles, the sample line and filter shall be heated to maintain a sample gas temperature of 235 °±15 °F (113 °±8 °C) before the filter and before the HFID.

(vii) Using a methane analyzer consisting of a gas chromatograph combined with a FID, the measurement of methane shall be done in accordance

with the Society of Automotive Engineers, Inc. (SAE) Recommended Practice J1151, ''Methane Measurement Using Gas Chromatography,'' December 1991, 1994 SAE Handbook—SAE International Cooperative Engineering Program, Volume 1: Materials, Fuels, Emissions, and Noise; Section 13 and page 170 (13.170), which is incorporated by reference.

(A) This incorporation by reference was approved by the Director of the Federal Register in accordance with 5 U.S.C. 552(a) and 1 CFR part 51.

(B) Copies may be inspected at U.S. EPA, OAR, 401 M Street, SW., Washington, DC 20460, or at the Office of the Federal Register, 800 North Capitol Street, NW., suite 700, Washington, DC. Copies of this material may be obtained from Society of Automotive Engineers International, 400 Commonwealth Drive, Warrendale, PA 15096–001.

(c) *Other analyzers and equipment.* Other types of analyzers and equipment may be used if shown to yield equivalent or superior results and if approved in advance by the Administrator.

[56 FR 25771, June 5, 1991, as amended at 58 FR 33209, June 16, 1993; 59 FR 48505, Sept. 21, 1994; 59 FR 50073, Sept. 30, 1994]

§ 86.112–91 Weighing chamber (or room) and microgram balance specifications.

(a) *Ambient conditions*—(1) *Temperature.* The temperature of the chamber in which the particulate filters are conditioned and weighed shall be maintained to within ±10 °F (6 °C) of a set point between 68 °F (20 °C) and 86 °F (30 °C) during all filter conditioning and filter weighing. A continuous recording of the temperature is required.

(2) *Humidity.* The relative humidity of the chamber in which the particulate filters are conditioned and weighed shall be maintained to within ±10 percent of a set point between 30 and 70 percent during all filter conditioning and filter weighing. A continuous recording of the temperature is required.

(3) The environment shall be free from any ambient contaminants (such as dust) that would settle on the particulate filters during their stabilization.

(4) It is required that two unused reference filters remain in the weighing room at all times in covered (to reduce dust contamination) but unsealed (to permit humidity exchange) petri dishes. These reference filters shall be placed in the same general area as the sample filters. These reference filters shall be weighed within 4 hours of, but preferably just prior to, the pre- and post-test sample filter weighings.

(5) If the weight of either of the reference filters changes between pre- and post-test sample filter weighings by more than ±2.0 percent of the test average primary filter loading (recommended minimum of 0.5 milligrams) or ±0.010 milligrams, whichever is greater, then the post-test sample filter weights are invalid. However, the post-test weighing procedure can be repeated to obtain valid weights within the time limits as specified in § 86.139.

(6) The reference filters shall be changed at least once per month, but never between pre- and post-test weighings of a given sample filter. The reference filters shall be the same size and material as the sample filters.

(b) *Microgram balance specifications.* The microgram balance used to determine the weights of all filters shall have a precision (standard deviation) and a readability of one microgram.

(c) *Other procedures and equipment.* Other procedures and equipment may be used if shown to yield equivalent or superior results and if approved in advance by the Administrator.

[56 FR 25773, June 5, 1991]

§ 86.113–91 Fuel specifications.

(a) *Otto-cycle test fuel.* (1) Gasoline having the following specifications will be used by the Administrator in exhaust and evaporative emission testing of petroleum-fueled Otto-cycle vehicles. Gasoline having the following specification or substantially equivalent specifications approved by the Administrator, shall be used by the manufacturer in exhaust and evaporative testing except that octane specifications do not apply.

Item		ASTM test method No.	Value
Octane, research.	min	D2699	93
Sensitivity	min		7.5
Lead (organic)	g/U.S. gal. (g/liter).	D3237	[1] 0.050 [1] (0.013)
Distillation Range:			
IBP [2]	°F	D86	75–95
	(°C)		(23.9–35)
10 pct. point	°F	D86	120–135
	(°C)		(48.9–57.2)
50 pct. point	°F	D86	200–230
	(°C)		(93.3–110)
90 pct. point	°F	D86	300–325
	(°C)		(148.9–162.8)
EP, (max.)	°F	D86	415
	(°C)		(212.8)
Sulfur, weight pct.	max.	D1266	0.10
Phosphorus, max.	g/U.S. gal. (g/liter).	D3231	0.005 (0.0013)
RVP [3,4]	psi (kPa)	D323	8.7–9.2 (60.0–63.4)
Hydrocarbon composition:			
Olefins,	max. pct.	D1319	10
Aromatics	max. pct.	D1319	35
Saturates		D1319	([5])

[1] Maximum.
[2] For testing at altitudes above 1,219 m (4,000 ft) the specified range is 75°–105 °F (23.9°–40.6 °C).
[3] For testing which is unrelated to evaporative emission control, the specified range is 8.0–9.2 psi (55.2–63.4 kPa).
[4] For testing at altitudes above 1,219 m (4,000 ft) the specified range is 7.9–9.2 psi (54.5–63.4 kPa).
[5] Remainder.

(2) Unleaded gasoline representative of commercial gasoline which will be generally available through retail outlets shall be used in service accumulation for petroleum-fueled Otto-cycle vehicles. Leaded gasoline will not be used in service accumulation.

(i) The octane rating of the gasoline used shall be no higher than 1.0 Research octane number above the minimum recommended by the manufacturer and have a minimum sensitivity of 7.5 octane numbers, where sensitivity is defined as the Research octane number minus the Motor octane number.

(ii) The Reid Vapor Pressure of the gasoline used shall be characteristic of the motor fuel used during the season in which the service accumulation takes place.

(3) Methanol fuel used for exhaust and evaporative emission testing and in service accumulation of methanol-fueled Otto-cycle vehicles shall be representative of commercially available methanol fuel and shall consist of at least 50 percent methanol by volume.

(i) Manufacturers shall recommend the methanol fuel to be used for testing and service accumulation in accordance with paragraph (a)(3) of this section.

(ii) The Administrator shall determine the methanol fuel to be used for testing and service accumulation.

(4) Other methanol fuels may be used for testing and service accumulation provided:

(i) They are commercially available, and

(ii) Information, acceptable to the Administrator, is provided to show that only the designated fuel would be used in customer service, and

(iii) Use of a fuel listed under paragraph (a)(3) of this section would have a detrimental effect on emissions or durability, and

(iv) Written approval from the Administrator of the fuel specifications must be provided prior to the start of testing.

(5) The specification range of the fuels to be used under paragraphs (a)(2), (a)(3), and (a)(4) of this section shall be reported in accordance with § 86.090–21(b)(3).

(b) *Diesel test fuel.* (1) The petroleum fuels employed for testing diesel vehicles shall be clean and bright, with pour and cloud points adequate for operability. The petroleum fuel may contain nonmetallic additives as follows: cetane improver, metal deactivator, antioxidant, dehazer, antirust, pour depressant, dye, dispersant and biocide. Except for the sulfur content of ''Type 2–D'' fuel, fuels specified for emissions testing are intended to be representative of commercially available in-use fuels.

(2) Petroleum fuel for diesel vehicles meeting the following specifications, or substantially equivalent specifications approved by the Administrator, shall be used in exhaust emissions testing. The grade of petroleum fuel recommended by the engine manufacturer, commercially designated as ''Type 2–D'' grade diesel, shall be used.

Item		ASTM test method No.	Type 2–D
Cetane Number		D613	42–50
Distillation range:			
IBP	°F	D86	340–400

Item		ASTM test method No.	Type 2–D
	(°C)	.....	(171.1–204.4)
10 pct. point	°F	D86	400–460
	(°C)	.....	(204.4–237.8)
50 pct. point	°F	D86	470–540
	(°C)	.....	(243.3–282.2)
90 pct. point	°F	D86	560–630
	(°C)	.....	(293.3–332.2)
EP	°F	D86	610–690
	(°C)	.....	(321.1–365.6)
Gravity	° API	D287	32–37
Total sulfur	pct.	D2622	0.08–0.12
Hydrocarbon composition:			
Aromatics, min	pct.	D1319	27
Paraffins, Naphthenes, Olefins.	.....	D1319	(1)
Flashpoint, min	°F	D93	130
	(°C)	.....	(54.4)
Viscosity, centistokes.	.....	D445	2.0–3.2

[1] Remainder.

(3) Petroleum fuel for diesel vehicles meeting the following specifications, or substantially equivalent specifications approved by the Administrator, shall be used in service accumulation. The grade of petroleum diesel fuel recommended by the engine manufacturer, commercially designated as ''Type 2–D'' grade diesel fuel, shall be used.

Item		ASTM test method No.	Type 2–D
Cetane Number	.....	D613	38–58
Distillation range:			
90 pct. point	°F	D86	540–650
	(°C)	.....	(282.2–343.3)
Gravity	°API	D287	30–39
Total sulfur	pct	D2622	0.08–0.12
Flashpoint, min	°F	D93	130
	(°C)	.....	(54.4)
Viscosity	centistokes	D455	1.5–4.5

(4) Methanol fuel used for exhaust and evaporative emission testing and in service accumulation of methanol-fueled diesel vehicles shall be representative of commercially available methanol fuel and shall consist of at least 50 percent methanol by volume.

(i) Manufacturers shall recommend the methanol fuel to be used for testing and service accumulation in accordance with paragraph (b)(4) of this section.

(ii) The Administrator shall determine the methanol fuel to be used for testing and service accumulation.

(5) Other fuels may be used for testing and service accumulation provided:

(i) They are commercially available, and

(ii) Information, acceptable to the Administrator, is provided to show that only the designated fuel would be used in customer service, and

(iii) Use of a fuel listed under paragraphs (b)(2) and (b)(3) or (b)(4) of this section would have a detrimental effect on emissions or durability, and

(iv) Written approval from the Administrator of the fuel specifications must be provided prior to the start of testing.

(6) The specification range of the fuels to be used under paragraphs (b)(2), (b)(3), (b)(4), and (b)(5) of this section shall be reported in accordance with § 86.090–21(b)(3).

(c) Fuels not meeting the specifications set forth in this section may be used only with the advance approval of the Administrator.

(d) *Mixtures of petroleum and methanol fuels for flexible fuel vehicles.* (1) Mixtures of petroleum and methanol fuels used for exhaust and evaporative emission testing and service accumulation for flexible fuel vehicles shall be within the range of fuel mixtures for which the vehicle was designed.

(2) Manufacturer testing and service accumulation may be performed using only those mixtures (mixtures may be different for exhaust testing, evaporative testing, and service accumulation expected to result in the highest emissions, provided:

(i) The fuels which constitute the mixture will be used in customer service, and

(ii) Information, acceptable to the Administrator, is provided by the manufacturer to show that the designated fuel mixtures would result in the highest emissions, and

(iii) Written approval from the Administrator of the fuel specifications must be provided prior to the start of testing.

(3) The specification range of the fuels to be used under paragraph (d)(1) of this section shall be reported in accordance with § 86.090–21(b)(3).

[55 FR 34144, Aug. 21, 1990, as amended at 57 FR 19538, May 7, 1992]

§ 86.113–94 Fuel specifications.

(a) *Gasoline fuel.* (1) Gasoline having the following specifications will be used by the Administrator in exhaust and evaporative emission testing of petroleum-fueled Otto-cycle vehicles. Gasoline having the following specification or substantially equivalent specifications approved by the Administrator, shall be used by the manufacturer in exhaust and evaporative testing except that octane specifications do not apply;

Item	ASTM test method No.	Value
Octane, Research, Min	D2699	93
Sensitivity, Min		7.5
Lead (organic):		
g/U.S. gal. (g/liter)	D3237	[1] 0.050 [1] (0.013)
Distillation Range:		
IBP:[2] °F (°C)	D86	75–95 (23.9–35)
10 pct. point: °F (°C)	D86	120–135 (48.9–57.2)
50 pct. point: °F (°C)	D86	200–230 (93.3–110)
90 pct. point: °F (°C)	D86	300–325 (148.9–162.8):
EP, max: °F (°C)	D86	415 (212.8)
Sulfur, weight pct. max	D1266	0.10
Phosphorus, max. g/U.S. gal. (g/liter).	D3231	0.005 (0.0013)
RVP[3,4], psi (kPa)	D3231	8.7–9.2 (60.0–63.4)
Hydrocarbon composition:		
Olefins, max. pct	D1319	10
Aromatics, max. pct	D1319	35
Saturates	D1319	([5])

[1] Maximum.
[2] For testing at altitudes above 1,219 m (4,000 ft), the specified range is 75°–105 °F (23.9°–40.6 °C).
[3] For testing which is unrelated to evaporative emission control, the specified range is 8.0–9.2 psi (55.2–63.4 kPa).
[4] For testing at altitudes above 1,219 m (4,000 ft), the specified range is 7.6–8.0 psi (52–55 kPa).
[5] Remainder.

(2)(i) Unleaded gasoline representative of commercial gasoline which will be generally available through retail outlets shall be used in service accumulation. Leaded gasoline will not be used in service accumulation.

(ii) The octane rating of the gasoline used shall be no higher than 1.0 Research octane number above the minimum recommended by the manufacturer and have a minimum sensitivity of 7.5 octane numbers, where sensitivity is defined as the Research octane number minus the Motor octane number.

(iii) The Reid Vapor Pressure of the gasoline used shall be characteristic of the motor fuel used during the season in which the service accumulation takes place.

(3) The specification range of the gasoline to be used under paragraph (a) of this section shall be reported in accordance with § 86.094–21(b)(3).

(b) *Petroleum diesel test fuel.* (1) The petroleum fuels employed for testing diesel vehicles shall be clean and bright, with pour and cloud points adequate for operability. The petroleum diesel fuel may contain nonmetallic additives as follows: Cetane improver, metal deactivator, antioxidant, dehazer, antirust, pour depressant, dye, dispersant and biocide. Fuels specified for emissions testing are intended to be representative of commercially available in-use fuels.

(2) Petroleum fuel for diesel vehicles meeting the following specifications, or substantially equivalent specifications approved by the Administrator, shall be used in exhaust emission testing. The grade of petroleum diesel fuel recommended by the engine manufacturer, commercially designated as ''Type 2–D'' grade diesel, shall be used:

Item		ASTM test method No.	Type 2–D
Cetane Number		D613	42–50
Distillation range:			.....
IBP	°F (°C)	D86	340–400 (171.1–204.4)
10 pct. point	°F (°C)	D86	400–460 (204.4–237.8)
50 pct. point	°F (°C)	D86	470–540 (243.3–282.2)
90 pct. point	°F (°C)	D86	560–630 (293.3–332.2)
EP	°F (°C)	D86	610–690 (321.1–365.6)
Gravity	°API	D287	32–37
Total sulfur	pct.	D2622	0.03–0.05

Item		ASTM test method No.	Type 2–D
Hydrocarbon composition:			
Aromatics, min.	pct.	D1319	27
Paraffins,		D1319	(1)
Naphthenes,			.....
Olefins			.....
Flashpoint, min.	°F	D93	130
	(°C)		(54.4)
Viscosity, centistokes		D445	2.0–3.2

[1] Remainder.

(3) Petroleum fuel for diesel vehicles meeting the following specifications, or substantially equivalent specifications approved by the Administrator, shall be used in service accumulation. The grade of petroleum diesel fuel recommended by the engine manufacturer, commercially designated as ''Type 2–D'' grade diesel fuel, shall be used:

Item		ASTM test method No.	Type 2–D
Cetane Number		D613	38–58
Cetane Index		D976	min. 40
Distillation range:			
90 pct. point	°F	D86	540–630
	(°C)		(282.2–343.3)
Gravity	°API	D287	30–39
Total sulfur	pct.	D2622	0.03–0.05
Flashpoint, min.	°F	D93	130
	(°C)		(54.4)
Viscosity	centistokes	D445	1.5–4.5

(4) Other petroleum distillate fuels may be used for testing and service accumulation provided:

(i) They are commercially available; and

(ii) Information, acceptable to the Administrator, is provided to show that only the designated fuel would be used in customer service; and

(iii) Use of a fuel listed under paragraphs (b)(2) and (b)(3) of this section would have a detrimental effect on emissions or durability; and

(iv) Written approval from the Administrator of the fuel specifications is provided prior to the start of testing.

(5) The specification range of the fuels to be used under paragraphs (b)(2), (b)(3) and (b)(4) of this section shall be reported in accordance with § 86.094–21(b)(3).

(c) *Methanol fuel.* (1) Methanol fuel used for exhaust and evaporative emission testing and in service accumulation shall be representative of commercially available methanol fuel and shall consist of at least 50 percent methanol by volume.

(i) Manufacturers shall recommend the methanol fuel to be used for testing and service accumulation.

(ii) The Administrator shall determine the methanol fuel to be used for testing and service accumulation.

(2) Other methanol fuels may be used for testing and service accumulation provided:

(i) They are commercially available; and

(ii) Information, acceptable to the Administrator, is provided to show that only the designated fuel would be used in customer service; and

(iii) Use of a fuel listed under paragraph (c)(1) of this section would have a detrimental effect on emissions or durability; and

(iv) Written approval from the Administrator of the fuel specifications must be provided prior to the start of testing.

(3) The specification range of the fuels to be used under paragraphs (c)(1) and (c)(2) of this section shall be reported in accordance with § 86.094–21(b)(3).

(d) *Mixtures of petroleum and methanol fuels for flexible fuel vehicles.* (1) Mixtures of petroleum and methanol fuels used for exhaust and evaporative emission testing and service accumulation for flexible fuel vehicles shall consist of the appropriate petroleum fuels listed in either paragraph (a) or paragraph (b) of this section and a methanol fuel representative of the fuel expected to be found in use, as specified in paragraph (c) of this section, and shall be within the range of fuel mixtures for which the vehicle was designed, as reported in § 86.94–21(j). The Administrator may use any fuel or fuel mixture within this range for testing.

(2) The fuel mixtures used by the manufacturers shall be sufficient to demonstrate compliance over the full design range, and shall include:

(i) For emission testing:

(A) The petroleum fuel specified in paragraph (a) or (b) of this section;

(B) A methanol fuel representative of the methanol fuel expected to the found in use, as specified in paragraph (c) of this section;

(C) A combination of the fuels specified in paragraphs (d)(2)(i)(A) and (d)(2)(i)(B) of this section at a composition which represents the highest Reid Vapor Pressure of in-use mixtures. This mixture shall contain between 9–13 percent methanol by volume.

(ii) For service accumulation, the fuels specified in paragraphs (a) and (c) of this section or, for diesel FFVs, paragraphs (b) and (c) of this section shall be used alternately. The fuels shall be alternated at mileage intervals not to exceed 5,000 miles. The fuels shall be alternated such that the cumulative volumes of both the methanol fuel and the petroleum fuel used shall be at least 25 percent of the total fuel volume.

(iii) Or, other combinations for testing or service accumulation which demonstrate compliance with the standards over the entire design range of the vehicle, provided that written approval is obtained from the Administrator prior to the start of testing.

(3) The specification range of the fuels to be used under this paragraph (d) shall be reported in accordance with § 86.094–21.

(e) *Natural gas fuel.* (1) Natural gas fuel having the following specifications will be used by the Administrator for exhaust and evaporative emission testing of natural gas-fueled vehicles:

Item		ASTM test method No.	Value
Methane	min. mole pct.	D1945	89.0
Ethane	max. mole pct.	D1945	4.5
C_3 and higher	max. mole pct.	D1945	2.3
C_6 and higher	max. mole pct.	D1945	0.2
Oxygen	max. mole pct.	D1945	0.6
Inert gases:			
Sum of CO_2 and N_2	max. mole pct.	D1945	4.0
Odorant [1]			

[1] The natural gas at ambient conditions must have a distinctive odor potent enough for its presence to be detected down to a concentration in air of not over ⅕ (one-fifth) of the lower limit of flammability.

(2) Natural gas representative of commercially available natural gas fuel which will be generally available through retail outlets shall be used in service accumulation for natural gas-fueled vehicles.

(3) Other natural gas fuels may be used for testing and service accumulation provided:

(i) They are commercially available; and

(ii) Information acceptable to the Administrator is provided to show that only the designated fuel would be used in customer service; and

(iii) Written approval from the Administrator of the fuel specifications must be provided prior to the start of testing.

(4) The specification range of the fuels to be used under paragraphs (e)(1), (e)(2) and (e)(3) of this section shall be reported in accordance with § 86.094–21(b)(3).

(f) *Liquefied petroleum gas fuel.* (1) Liquefied petroleum gas fuel used for exhaust and evaporative emission testing and in service accumulation shall be commercially available liquefied petroleum gas fuel.

(i) Manufacturers shall recommend the liquefied petroleum gas fuel to be used for testing and service accumulation.

(ii) The Administrator shall determine the liquefied petroleum gas fuel to be used for testing and service accumulation.

(2) Other liquefied petroleum gas fuels may be used for testing and service accumulation provided:

(i) They are commercially available; and

(ii) Information, acceptable to the Administrator, is provided to show that only the designated fuel would be used in customer service; and

(iii) Written approval from the Administrator of the fuel specifications must be provided prior to the start of testing.

(3) The specification range of the fuel to be used under paragraphs (f)(1) and (f)(2) of this section shall be measured in accordance with ASTM D2163–61 and reported in accordance with § 86.094–21(b)(3).

(g) Fuels not meeting the specifications set forth in this section may be used only with the advance approval of the Administrator.

[59 FR 48506, Sept. 21, 1994, as amended at 60 FR 34342, June 30, 1995; 62 FR 47120, Sept. 5, 1997; 63 FR 24448, May 4, 1998]

§ 86.114–79 Analytical gases.

(a) *Analyzer gases.* (1) Gases for the CO and CO_2 analyzers shall be single blends of CO and CO_2 respectively using nitrogen as the diluent.

(2) Gases for the hydrocarbon analyzer shall be single blends of propane using air as the diluent.

(3) Gases for NO_X analyzer shall be single blends of NO named as NO_X, with a maximum NO_2 concentration of 5 percent of the nominal value, using nitrogen as the diluent.

(4) Fuel for the evaporative emission enclosure FID shall be a blend of 40±2% hydrogen with the balance being helium. The mixture shall contain less than 1 ppm equivalent carbon response. 98 to 100 percent hydrogen fuel may be used with advance approval by the Administrator.

(5) The allowable zero gas (air or nitrogen) impurity concentrations shall not exceed 1 ppm equivalent carbon response, 1 ppm carbon monoxide, 0.04 percent (400 ppm) carbon dioxide and 0.1 ppm nitric oxide.

(6) ''Zero grade air'' includes artificial ''air'' consisting of a blend of nitrogen and oxygen with oxygen concentrations between 18 and 21 mole percent.

(7) The use of precision blending devices (gas dividers) to obtain the required calibration, as defined below, is acceptable, provided that the calibration curver they produce name a calibration gas within 2 percent of its certified concentration. This verification shall be performed at between 15 and 50 percent of the full scale concentration of the range and shall be included with each gas calibration incorporating a blending device. Alternative procedures to verify the validity of the analyzer calibration curves generated using a gas divider are acceptable provided the procedures are approved in advance by the Administrator.

(b) Calibration gases shall be traceable to within 1 percent of NBS gas standards, or other gas standards which have been approved by the Administrator.

(c) Span gases shall be accurate to within 2 percent of true concentration, where true concentration refers to NBS gas standards, or other gas standards which have been approved by the Administrator.

[42 FR 32954, June 28, 1977, as amended at 43 FR 52920, Nov. 14, 1978; 54 FR 2121, Jan. 19, 1989]

§ 86.114–94 Analytical gases.

(a) *Analyzer gases.* (1) Gases for the CO and CO_2 analyzers shall be single blends of CO and CO_2 respectively using nitrogen as the diluent.

(2) Gases for the THC analyzer shall be:

(i) Single blends of propane using air as the diluent; and

(ii) Optionally, for response factor determination, single blends of methanol using air as the diluent.

(3) Gases for the methane analyzer shall be single blends of methane using air as the diluent.

(4) Gases for the NO_X analyzer shall be single blends of NO named as NO_X, with a maximum NO_2 concentration of 5 percent of the nominal value, using nitrogen as the diluent.

(5) Fuel for FIDs and HFIDs and the methane analyzer shall be a blend of 40 ±2 percent hydrogen with the balance

being helium. The mixture shall contain less than one ppm equivalent carbon response. 98 to 100 percent hydrogen fuel may be used with advance approval by the Administrator.

(6) The allowable zero gas (air or nitrogen) impurity concentrations shall not exceed 1 ppm equivalent carbon response, 1 ppm carbon monoxide, 0.04 percent (400 ppm) carbon dioxide, and 0.1 ppm nitric oxide.

(7) ''Zero grade air'' includes artificial ''air'' consisting of a blend of nitrogen and oxygen with oxygen concentrations between 18 and 21 mole percent.

(8) The use of precision blending devices (gas dividers) to obtain the required calibration, as defined below, is acceptable, provided that the calibration curves they produce name a calibration gas within 2 percent of its certified concentration. This verification shall be performed at between 15 and 50 percent of the full scale concentration of the range and shall be included with each gas calibration incorporating a blending device. Alternative procedures to verify the validity of the analyzer calibration curves generated using a gas divider are acceptable provided the procedures are approved in advance by the Administrator.

(b) Calibration gases (not including methanol) shall be traceable to within one percent of NIST (formerly NBS) gas standards, or other gas standards which have been approved by the Administrator.

(c) Span gases (not including methanol) shall be accurate to within two percent of true concentration, where true concentration refers to NIST (formerly NBS) gas standards, or other gas standards which have been approved by the Administrator.

(d) Methanol in air gases used for response factor determination shall:

(1) Be traceable to within ±2 percent of NIST (formerly NBS) gas standards, or other standards which have been approved by the Administrator; and

(2) Remain within ±2 percent of the labeled concentration. Demonstration of stability shall be based on a quarterly measurement procedure with a precision of ±2 percent (two standard deviations), or other method approved by the Administrator. The measurement procedure may incorporate multiple measurements. If the true concentration of the gas changes by more than two percent, but less than ten percent, the gas may be relabeled with the new concentration.

[56 FR 25773, June 5, 1991, as amended at 60 FR 34342, June 30, 1995]

§86.115–00 EPA dynamometer driving schedules.

Section 86.115–00 includes text that specifies requirements that differ from §86.115–78. Where a paragraph in §86.115–78 is identical and applicable to §86.115–00, this may be indicated by specifying the corresponding paragraph and the statement ''[Reserved]. For guidance see §86.115–78.''

(a) The driving schedules for the EPA Urban Dynamometer Driving Schedule, US06, SC03, and the EPA New York City Cycles are contained in appendix I of this part. The driving schedules are defined by a smooth trace drawn through the specified speed vs. time relationships. They each consist of a distinct non-repetitive series of idle, acceleration, cruise, and deceleration modes of various time sequences and rates.

(b) The driver should attempt to follow the target schedule as closely as possible (refer to §86.128–00 for additional cycle driving instructions). The speed tolerance at any given time for these schedules, or for a driver's aid chart approved by the Administrator, are as follows:

(b)(1) through (c) [Reserved]. For guidance see §86.115–78.

[61 FR 54891, Oct. 22, 1996]

§86.115–78 EPA urban dynamometer driving schedule.

(a) The EPA Urban Dynamometer Driving Schedule and the EPA New York City Cycle are listed in appendix I of this part. The driving schedules are defined by a smooth trace drawn through the specified speed vs. time relationships. They each consist of a distinct nonrepetitive series of idle, acceleration, cruise, and deceleration modes of various time sequences and rates.

(b) The driver should attempt to follow the target schedule as closely as possible. The speed tolerance at any

given time for these schedules, or for a driver's aid chart approved by the Administrator, are as follows:

(1) The upper limit is 2 mph (3.2 km/h) higher than the highest point on the trace within 1 second of the given time.

(2) The lower limit is 2 mph (3.2 km/h) lower than the lowest point on the trace within 1 second of the given time.

(3)(i) Speed variations greater than the tolerances (such as may occur during gear changes or braking spikes) are acceptable, provided they occur for less than 2 seconds on any occasion and are clearly documented as to the time and speed at that point of the driving schedule.

(ii) When conducted to meet the requirements of § 86.129–94 or § 86.153–98(d), up to three additional occurrences of speed variations greater than the tolerance are acceptable, provided they occur for less than 15 seconds on any occasion, and are clearly documented as to the time and speed at that point of the driving schedule.

(4) Speeds lower than those prescribed are acceptable, provided the vehicle is operated at maximum available power during such occurrences.

(5) When conducted to meet the requirements of § 86.129–94, § 86.132–96, § 86.146–96, or § 86.153–98(d), the speed tolerance shall be as specified above, except that the upper and lower limits shall be 4 mph (6.4 km/h).

(c) Figures B78–4(a) and B78–4(b) show the range of acceptable speed tolerances for typical points. Figure B78–4(a) is typical of portions of the speed curve which are increasing or decreasing throughout the 2-second time interval. Figure B78–4(b) is typical of portions of the speed curve which include a maximum or minimum value.

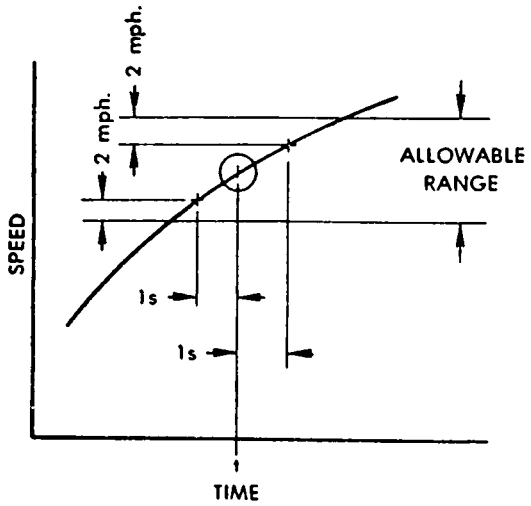

FIGURE B78-4a—DRIVERS TRACE, ALLOWABLE RANGE

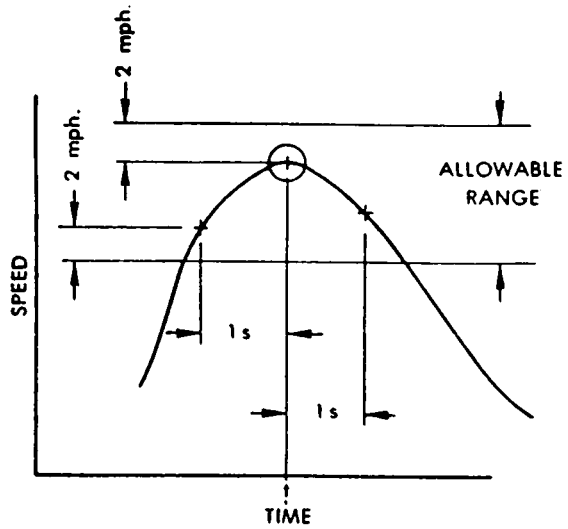

FIGURE B78-4b—DRIVERS TRACE, ALLOWABLE RANGE

[42 FR 32954, June 28, 1977, as amended at 43 FR 52920, Nov. 14, 1978; 58 FR 16030, Mar. 24, 1993; 59 FR 16296, Apr. 6, 1994]

§86.116–90 Calibrations, frequency and overview.

(a) Calibrations shall be performed as specified in §86.117 through §86.126.

(b) At least yearly or after any maintenance which could alter background emission levels, evaporative enclosure background emission measurements shall be performed.

(c) At least monthly or after any maintenance which could alter calibration, the following calibrations and checks shall be performed:

(1) Calibrate the hydrocarbon analyzers (both evaporative and exhaust instruments), carbon dioxide analyzer, carbon monoxide analyzer, oxides of nitrogen analyzer, methanol analyzer, and formaldehyde analyzer (certain analyzers may require more frequent calibration depending on particular equipment and uses).

(2) Calibrate the dynamometer. If the dynamometer receives a weekly performance check (and remains within calibration) the monthly calibration need not be performed.

(3) Perform a hydrocarbon and methanol (if methanol fuel is used) retention check and calibration on the evaporative emission enclosure.

(4) Calibrate the gas meters or flow instrumentation used for providing total flow measurement for particulate sampling.

(d) At least weekly or after any maintenance which could alter calibration, the following calibrations and checks shall be performed:

(1) Check the oxides of nitrogen converter efficiency, and

(2) Perform a CVS system verification.

(3) Run a performance check on the dynamometer. This check may be omitted if the dynamometer has been calibrated within the preceeding month.

(e) The CVS positive displacement pump or Critical Flow Venturi shall be calibrated following initial installation, major maintenance, or as necessary when indicated by the CVS system verification (described in § 86.119).

(f) Sample conditioning columns, if used in the CO analyzer train, should be checked at a frequency consistent with observed column life or when the indicator of the column packing begins to show deterioration.

[54 FR 14516, Apr. 11, 1989]

§ 86.116–94 Calibrations, frequency and overview.

(a) Calibrations shall be performed as specified in § 86.117 through § 86.126.

(b) At least yearly or after any maintenance which could alter background emission levels, evaporative enclosure background emission measurements shall be performed.

(c) At least monthly or after any maintenance which could alter calibration, the following calibrations and checks shall be performed:

(1) Calibrate the THC analyzers (both evaporative and exhaust instruments), methane analyzer, carbon dioxide analyzer, carbon monoxide analyzer, and oxides of nitrogen analyzer (certain analyzers may require more frequent calibration depending on particular equipment and uses).

(2) Calibrate the dynamometer. If the dynamometer receives a weekly performance check (and remains within calibration) the monthly calibration need not be performed.

(3) Perform an organic gas retention and calibration on the evaporative emissions enclosure (see § 86.117–90(c)).

(4) Calibrate the gas meters or flow instrumentation used for providing total flow measurement for particulate sampling.

(5) Check the oxides of nitrogen converter efficiency.

(d) At least weekly or after any maintenance which could alter calibration, the following calibrations and checks shall be performed:

(1) [Reserved]

(2) Perform a CVS system verification, and

(3) Run a performance check on the dynamometer. This check may be omitted if the dynamometer has been calibrated within the preceding month.

(e) The CVS positive displacement pump or Critical Flow Venturi shall be calibrated following initial installation, major maintenance, or as necessary when indicated by the CVS system verification (described in § 86.119).

(f) Sample conditioning columns, if used in the CO analyzer train, should be checked at a frequency consistent with observed column life or when the indicator of the column packing begins to show deterioration.

(g) The Administrator, upon request, may waive the requirement to comply with the specified methanol recovery tolerance (e.g., ±2 percent in §§ 86.117–90 and 86.119–90), and/or the specified methanol retention tolerance (e.g., ±4

percent in §86.117–90), and instead require compliance with higher tolerances (not to exceed ±6 percent for recoveries and ±8 for retention), provided that:

(1) The Administrator determines that compliance with these specified tolerances is not practically feasible; and

(2) The manufacturer makes information available to the Administrator which indicates that the calibration tests and their results are consistent with good laboratory practice, and that the results are consistent with the results of calibration testing conducted by the Administrator.

[56 FR 25774, June 5, 1991, as amended at 58 FR 58422, Nov. 1, 1993; 59 FR 33913, July 1, 1994; 60 FR 34342, June 30, 1995]

§86.117–90 Evaporative emission enclosure calibrations.

The calibration of the evaporative emission enclosure consists of three parts: Initial and periodic determination of enclosure background emissions (hydrocarbons and methanol); initial determination of enclosure internal volume; and periodic hydrocarbon and methanol retention check and calibration. Methanol measurements may be omitted when methanol-fueled vehicles will not be tested in the evaporative enclosure.

(a) *Initial and periodic determination of enclosure background emissions.* Prior to its introduction into service, annually thereafter, and after any repair which can affect the enclosure background emissions, the enclosure shall be checked to determine that it does not contain materials which will themselves emit hydrocarbons or methanol.* Proceed as follows:

*NOTE: When methanol as well as hydrocarbons are present in the evaporative enclosure, the HFID hydrocarbon concentration measurement includes the partial response of the HFID to methanol plus the hydrocarbons. Determination of the HFID response to methanol, §86.121, prior to its being placed in service is required for the determination of hydrocarbons.

(1) Zero and span (calibrate if required) the hydrocarbon analyzer.

(2) Purge the enclosure until a stable background hydrocarbon reading is obtained.

(3) Turn on the mixing blower (if not already on).

(4) Seal enclosure and measure background hydrocarbon concentration, background methanol, temperature, and barometric pressure. These are the initial readings C_{HCi}, C_{CH3OHi}, and P_{Bi}, T_i, for the enclosure background determination.

(5) Allow the enclosure to stand undisturbed without sampling for four hours.

(6) Measure the hydrocarbon concentration on the same FID and the methanol level. These are the final concentrations, C_{HCf} and C_{CH3OHf}. Also measure final temperature and barometric pressure.

(7) Calculate the mass change of methanol, hydrocarbons, and hydrocarbons plus methanol in the enclosure according to the equations in paragraph (d) of this section. The enclosure background emissions (hydrocarbons plus methanol) shall not be greater than 0.4g for the 4 hours.

(b) *Initial determination of enclosure internal volume.* Prior to its introduction into service the enclosure internal volume shall be determined by the following procedure:

(1) Carefully measure the internal length, width and height of the enclosure, accounting for irregularities (such as braces) and calculate the internal volume.

(2) Perform an enclosure calibration check according to paragraphs (c) (1) through (7) of this section.

(3) If the calculated mass does not agree within 2 percent of the injected propane mass, then corrective action is required.

(c) *Hydrocarbon and methanol (organic gas) retention check and calibration.* The hydrocarbon and methanol (if the enclosure is used for methanol-fueled vehicles) retention check provides a check upon the calculated volume and also measures the leak rate. Prior to its introduction into service and at least monthly thereafter (the methanol check can be performed less frequently, provided it is performed at least twice annually) the enclosure leak rate shall be determined as follows:

(1) Zero and span (calibrate if required) the hydrocarbon analyzer.

(2) Purge the enclosure until a stable background hydrocarbon reading is obtained.

(3) Turn on the mixing blower (if not already on).

(4) Seal enclosure and measure background hydrocarbon concentration, background methanol, temperature, and barometric pressure. These are the initial readings C_{HCi}, C_{CH3OHi}, T_i and P_{Bi} for the enclosure calibration.

(5) Inject into the enclosure a known quantity of pure propane (4g is a convenient quantity) and a known quantity of pure methanol (4g is a convenient quantity) in gaseous form; i.e., at a temperature of at least 150–155 °F (65–68 °C). The propane and methanol may be measured by volume flow or by mass measurement. The method used to measure the propane and methanol shall have an accuracy of ±0.5 percent of the measured value (less accurate methods may be used with the advanced approval of the Administrator). The methanol and propane tests do not need to be conducted simultaneously.

(6) After a minimum of 5 minutes of mixing, analyze the enclosure atmosphere for hydrocarbon and methanol content, also record temperature and pressure. These measurements are the final readings for the enclosure calibration as well as the initial readings for the retention check.

(7) To verify the enclosure calibration, calculate the mass of propane and the mass of methanol using the measurements taken in steps (4) and (6) (see paragraph (d) of this section). This quantity must be within ±2 percent of that measured in step 5 above. (For 1991–1995 calendar years, the difference may exceed ±2 percent for methanol, provided it does not exceed ±8 percent for 1991 testing and ±6 percent for 1992–1995 testing.)

(8) Allow the enclosure to remain sealed for a minimum of 4 hours, analyze the enclosure atmosphere for hydrocarbon and methanol content; record temperature and barometric pressure. These are the final readings for the hydrocarbon and methanol retention check.

(9) Calculate, using the equations in paragraph (d) of this section and the readings taken in step (8), the hydrocarbon and methanol mass. It may not differ by more than ±4 percent of the value in step (6). (For 1991–1995 calendar years, the difference may exceed ±4 percent for methanol, provided it does not exceed ±8 percent for 1991 testing and ±6 percent for 1992–1995 testing.)

(d) *Calculations.* (1) The calculation of net methanol and hydrocarbon mass change is used to determine enclosure background and leak rate. It is also used to check the enclosure volume measurements. The methanol mass change is calculated from the initial and final methanol samples, temperature and pressure according to the following equation:

$$M_{CH3OH} = V_X \times \frac{TE_f}{VE_f \times T_{SHEDf}}\left(C_{MX1i} \times AV_{1f}\right) + \left(C_{MS2f} \times AV_{2f}\right) - \frac{TE_i}{VE_i \times T_{SHED_i}}\left(C_{MS1i} \times AV_{1i}\right) + \left(C_{MS1i} \times AV_{2i}\right)$$

Where:

(i) M_{CH3OH}=Methanol mass change, μ g.

(ii) V=Enclosure volume, ft³, as measured in paragraph (b)(1) of this section.

(iii) TE=Temperature of sample withdrawn, °R.

(iv) T_{SHED}=Temperature of SHED, °R.

(v) VE=Volume of sample withdrawn, ft³.

(vi) P_B=Barometric pressure at time of sampling, in. Hg.

(vii) C_{MS}=GC concentration of test sample.

(viii) AV=Volume of absorbing reagent in impinger (ml).

(ix) i=Initial sample.

(x) f=Final sample.
(xi) 1=First impinger.
(xii) 2=Second impinger.

(2) The hydrocarbon mass change is calculated from the initial and final FID readings of hydrocarbon concentration, methanol concentration with FID response to methanol, temperature, and pressure according to the following equation:

$$M_{HC} = kV \times 10^{-4} \left(\frac{\left(C_{HCf} - rC_{CH3OH_f}\right) \times P_{Bf}}{T_f} - \frac{\left(C_{HCi} - rC_{CH3OH_i}\right) \times P_{Bi}}{T_i} \right)$$

Where:
(i) M_{HC}=Hydrocarbon mass change, g.
(ii) C_{HC}=FID hydrocarbon concentration as ppm carbon including FID response to methanol in the sample.
(iii) C_{CH3OH}=Methanol concentration as ppm carbon

$$= \frac{1.501 \times 10^{-3} \times T_E}{P_B \times V_E} \left[\left(C_{S1} \times AV_1\right) + \left(C_2 \times AV_2\right) \right]$$

(iv) V=Enclosure volume ft^3 (m^3), as measured in paragraph (b)(1) of this section.
(v) r=FID response factor to methanol.
(vi) P_B=Barometric pressure, in. Hg. (kPa).
(vii) T=Enclosure ambient temperature, °R(°K).
(viii) i=Indicates initial reading.
(ix) f=Indicates final reading.
(x)(A) k=3.05.
(B) *For SI units,* k=17.60.

NOTE: Hydrocarbon concentration is stated in ppm carbon, that is, ppm propane × 3. Expressions in parentheses are for SI units.

[54 FR 14516, Apr. 11, 1989, as amended at 60 FR 34342, June 30, 1995]

§ 86.117–96 Evaporative emission enclosure calibrations.

The calibration of evaporative emission enclosures consists of three parts: initial and periodic determination of enclosure background emissions (hydrocarbons and methanol); initial determination of enclosure internal volume; and periodic hydrocarbon and methanol retention check and calibration. Methanol measurements may be omitted if methanol-fueled vehicles will not be tested in the evaporative enclosure. Alternate calibration methods may be used if shown to yield equivalent or superior results, and if approved in advance by the Administrator; specifically, more extreme temperatures may be used for determining calibration without affecting the validity of test results.

(a) *Initial and periodic determination of enclosure background emissions.* Prior to its introduction into service, annually thereafter, and after any repair that can affect the enclosure background emissions, the enclosure shall be checked to determine that it does not contain materials that will themselves emit hydrocarbons or methanol. When methanol as well as hydrocarbons are present in the evaporative enclosure, the HFID hydrocarbon concentration measurement includes the partial response of the HFID to methanol plus the hydrocarbons. Determination of the HFID response to methanol, § 86.121, prior to its being placed in service is required for the determination of hydrocarbons. Proceed as follows:

(1) Prepare the enclosure. (i) Variable-volume enclosures may be operated in either latched or unlatched volume configuration, as described in

paragraph (b)(1) of this section. Ambient temperatures shall be maintained at 96±3 °F throughout the 4-hour period.

(ii) Fixed-volume enclosures may be operated with inlet and outlet flow streams either closed or open; if inlet and outlet flow streams are open, the air flowing into and out of the enclosure must be monitored in accordance with § 86.107–96(a)(1)(ii)(B). Ambient temperatures shall be maintained at 96±3 °F throughout the 4-hour period.

(iii) For running loss enclosures ambient temperatures shall be maintained at 95±3 °F throughout the 4-hour period. For running loss enclosures designed with a vent for makeup air, the enclosure shall be operated with the vent closed.

(2) The enclosure may be sealed and the mixing fan operated for a period of up to 12 hours before the 4-hour background sampling period begins.

(3) Zero and span (calibrate if required) the hydrocarbon analyzer.

(4) Prior to the background determination, purge the enclosure until a stable background hydrocarbon reading is obtained.

(5) Turn on the mixing blower (if not already on).

(6) Seal enclosure and measure background hydrocarbon concentration, background methanol, temperature, and barometric pressure.

These are the initial readings C_{HCi}, C_{CH_3OHi}, and P_{Bi}, T_i for the enclosure background determination.

(7) Allow the enclosure to stand undisturbed for four hours.

(8) Measure the hydrocarbon concentration on the same FID and the methanol level. These are the final concentrations, C_{HCf} and C_{CH_3OHf}. Also measure final temperature and barometric pressure.

(9) Calculate the mass change of methanol, hydrocarbons, and hydrocarbons plus methanol in the enclosure according to the equations in paragraph (d) of this section.

(i) *Diurnal enclosures.* The enclosure background emissions (hydrocarbons plus methanol) shall not be greater than 0.05g for the 4 hours.

(ii) *Running loss enclosures.* The enclosure background emissions (hydrocarbons plus methanol) shall not be greater than 0.2 grams for the 4 hours.

(b) *Initial determination of enclosure internal volume.* Prior to its introduction into service the enclosure internal volume shall be determined by the following procedure:

(1) Carefully measure the internal length, width and height of the enclosure, accounting for irregularities (such as braces) and calculate the internal volume. For variable-volume enclosures, latch the enclosure to a fixed volume when the enclosure is held at a constant temperature; this nominal volume shall be repeatable within ±0.5 percent of the reported value.

(2)–(3) [Reserved]

(c) *Hydrocarbon and methanol (organic gas) retention check and calibration.* The hydrocarbon and methanol (if the enclosure is used for methanol-fueled vehicles) retention check provides a check upon the calculated volume and also measures the leak rate. The enclosure leak rate shall be determined prior to its introduction into service, following any modifications or repairs to the enclosure that may affect the integrity of the enclosure, and at least monthly thereafter. (The methanol check can be performed less frequently, provided it is performed at least twice annually.) If six consecutive monthly retention checks are successfully completed without corrective action, the enclosure leak rate may be determined quarterly thereafter as long as no corrective action is required.

(1) An enclosure to be used for the diurnal emission test (see § 86.133–96) shall be calibrated according to the following procedure. Calibration for hydrocarbon and methanol may be conducted simultaneously or in sequential test runs.

(i) Zero and span (calibrate if required) the hydrocarbon analyzer.

(ii) Purge the enclosure until a stable background hydrocarbon reading is obtained.

(iii) Turn on the mixing blowers (if not already on).

(iv) [Reserved]

(v) Turn on the ambient temperature control system (if not already on) and adjust it for an initial temperature of

96 °F (36 °C). On variable-volume enclosures, latch the enclosure to the appropriate volume position for the set temperature. On fixed-volume enclosures close the outlet and inlet flow streams.

(vi) When the enclosure stabilizes at 96±3 °F (36±2 °C), seal the enclosure and measure background hydrocarbon concentration, background methanol, temperature, and barometric pressure. These are the initial readings C_{HCi}, C_{CH_3OHi}, T_i, and P_{Bi} for the enclosure calibration.

(vii) Inject into the enclosure 2 to 6 grams of pure methanol at a temperature of at least 150 °F (65 °C) and/or 2 to 6 grams of pure propane. The injected quantity may be measured by volume flow or by mass measurement. The method used to measure the quantity of methanol and propane shall have an accuracy of ±0.2 percent of the measured value (less accurate methods may be used with the advance approval of the Administrator).

(viii) After a minimum of 5 minutes of mixing, analyze the enclosure atmosphere for hydrocarbon and methanol content, also record temperature and pressure. These measurements are the final readings for the enclosure calibration as well as the initial readings for the retention check.

(ix) To verify the enclosure calibration, calculate the mass of propane and the mass of methanol using the measurements taken in paragraphs (c)(1)(vi) and (viii) of this section. See paragraph (d) of this section. This quantity must be within ±2 percent of that measured in paragraph (c)(1)(vii) of this section. (For 1991–1995 calendar years, the difference may exceed ±2 percent for methanol, provided it does not exceed ±6 percent.)

(x) For variable-volume enclosures, unlatch the enclosure from the nominal volume configuration. For fixed-volume enclosures, open the outlet and inlet flow streams.

(xi) Start cycling the ambient temperature from 96 °F to 72 °F and back to 96 °F over a 24-hour period, according to the profile specified in § 86.133–96 and appendix II of this part, within 15 minutes of sealing the enclosure.

(xii) At the completion of the 24-hour cycling period, analyze the enclosure atmosphere for hydrocarbon and methanol content; determine the net withdrawn methanol (in the case of diurnal emission testing with fixed volume enclosures); record temperature and barometric pressure. These are the final readings for the hydrocarbon and methanol retention check. The final hydrocarbon and methanol mass, calculated in paragraph (d) of this section, shall be within three percent of that determined in paragraph (c)(1)(viii) of this section. (For 1991–1995 calendar years, the difference may exceed ±3 percent for methanol, provided it does not exceed ±6 percent.)

(2) An enclosure to be used for the running loss test (see § 86.134–96) shall meet the calibration and retention requirements of § 86.117–90(c).

(3) Enclosures calibrated according to the procedures specified in either paragraph (c)(1) or (c)(2) of this section may be used for hot soak testing (see § 86.138).

(d) *Calculations.* (1) The calculation of net methanol and hydrocarbon mass change is used to determine enclosure background and leak rate. It is also used to check the enclosure volume measurements. The methanol mass change is calculated from the initial and final methanol samples, the net withdrawn methanol (in the case of diurnal emission testing with fixed-volume enclosures), and initial and final temperature and pressure according to the following equation:

$$M_{CH_3OH} = V_n \times \left[\frac{\left(C_{MS1f} \times AV_{1f}\right) + \left(C_{MS2f} \times AV_{2f}\right)}{V_{E_f}}\right] - \left[\frac{\left(C_{MS1i} \times AV_{1i}\right) + \left(C_{MS2i} \times AV_{2i}\right)}{V_{E_i}}\right] + \left(M_{CH_3OH,out} - M_{CH_3OH,in}\right)$$

Where:

(i) M_{CH3OH}=Methanol mass change, μ g.

(ii) V=Enclosure volume, ft^3, as measured in paragraph (b)(1) of this section.

(iii) [Reserved].
(iv) [Reserved].
(v) V_E=Volume of sample withdrawn, ft^3. Sample volumes must be corrected for differences in temperature to be consistent with determination of V_n, prior to being used in the equation.
(vi) P_B=Barometric pressure at time of sampling, in. Hg.
(vii) C_{MS}=GC concentration of test sample.
(viii) AV=Volume of absorbing reagent in impinger (ml).
(ix) i=Initial sample.
(x) f=Final sample.
(xii) 1=First impinger.
(xiii) 2=Second impinger.
(xiv) M_{CH3OH},out=mass of methanol exiting the enclosure, in the case of fixed volume enclosures for diurnal emission testing, μ g.
(xv) M_{CH3OH},in=mass of methanol exiting the enclosure, in the case of fixed volume enclosures for diurnal emission testing, μ g.

(2) The hydrocarbon mass change is calculated from the initial and final FID readings of hydrocarbon concentration, methanol concentration with FID response to methanol, the net withdrawn hydrocarbon and methanol (in the case of diurnal emission testing with fixed-volume enclosures), and initial and final temperature and pressure according to the following equation:

$$M_{HC} = \left(kV_n \times 10^{-4}\right) \times \left(\frac{\left(C_{HC_f} - rC_{CH_3OH_f}\right)}{T_f} - \frac{\left(C_{HC_i} - rC_{CH_3OH_i}\right)P_{B_i}}{T_i} \right) + M_{HC,out} - M_{HC,in}$$

Where,

(i) M_{HC}=Hydrocarbon mass change, g.

(ii) C_{HC}=FID hydrocarbon concentration as ppm carbon, that is, ppm propane × 3, including FID response to methanol in the sample.

(iii) C_{CH3OH}=Methanol concentration as ppm carbon

$$= \frac{1.501 \times 10^{-3} \times T_E}{P_B \times V_E} \left[\left(C_{S1} \times AV_1\right) + \left(C_2 \times AV_2\right)\right]$$

(iv) V=Enclosure volume ft^3 (m^3), as measured in paragraph (b)(1) of this section.

(v) r=FID response factor to methanol.

(vi) P_B=Barometric pressure, in. Hg. (kPa).

(vii) T=Enclosure ambient temperature, R(K).

(viii) i=Indicates initial reading.

(ix) f=Indicates final reading.

(x)(A) k=3.05.

(B) For SI units, k=17.60.

(xi) $M_{HC,out}$=mass of hydrocarbon exiting the enclosure, in the case of fixed-volume enclosures for diurnal emission testing, g.

(xii) $M_{HC,in}$=mass of hydrocarbon entering the enclosure, in the case of fixed-volume enclosures for diurnal emission testing, g.

(3) For variable-volume enclosures, defined in § 86.107(a)(1)(i), the following simplified form of the hydrocarbon mass change equation may be used:

$$M_{HC} = \left(\frac{kP_B V_n \times 10^{-4}}{T} \right) \times \left[\left(C_{HC_f} - rC_{CH_3OH_f}\right) - \left(C_{HC_i} - rC_{CH_3OH_i}\right)\right]$$

(e) *Calibration of equipment for point-source testing of running losses.* For the point-source method, the running loss fuel vapor sampling system shall be calibrated as a CVS system, as specified in §86.119, with the additional specification that the vapor sampling system verification be conducted as follows:

(1) The following ''gravimetric'' technique can be used to verify that the vapor sampling system and analytical instruments can accurately measure a mass of gas that has been injected into the system. If the vapor sampling system will be used only in the testing of petroleum-fueled engines, the system verification may be performed using propane. If the vapor sampling system will be used with methanol-fueled vehicles as well as petroleum-fueled vehicles, the system verification performance check must include a methanol check in addition to the propane check. (Verification can also be accomplished by constant flow metering using critical flow orifice devices.)

(i) Obtain a small cylinder that has been charged with pure propane gas. Obtain another small cylinder that has been charged with pure methanol if the system will be used for methanol-fueled vehicle testing. Since this cylinder will be heated to 150–155 °F, care must be taken to ensure that the liquid volume of methanol placed in the cylinder does not exceed approximately one-half of the total volume of the cylinder.

(ii) Determine a reference cylinder weight to the nearest 0.01 grams.

(iii) Operate the vapor sampling system in the normal manner and release a known quantity of pure propane into the most frequently used fuel vapor collector during the sampling period (approximately 5 minutes).

(iv) Continue to operate the vapor sampling system in the normal manner and release a known quantity of pure methanol into the system during the sampling period (approximately 5 minutes).

(v) The calculations of §86.144 are performed in the normal way, except in the case of propane. The density of propane (17.30 g/ft^3/carbon atom (0.6109 kg/m^3/carbon atom)) is used in place of the density of exhaust hydrocarbons. In the case of methanol, the density of 37.71 g/ft^3 (1.332 kg/m^3) is used.

(vi) The gravimetric mass is subtracted from the vapor sampling system measured mass and then divided by the gravimetric mass to determine the percent accuracy of the system.

(vii) The cause for any discrepancy greater than ±2 percent must be found and corrected.

(2) This procedure shall be conducted in the point-source running loss test environment with the collector installed in a vehicle in the normal test configuration. The fuel of the test vehicle shall either be diesel, or it shall be kept under 100 °F (38 °C). Two to six grams of pure propane and two to six grams of pure methanol shall be injected into the collector while the vehicle is operated over one Urban Dynamometer Driving Schedule (UDDS), as described in §86.115 and appendix I of this part. The propane and methanol injections shall be conducted at the ambient temperature of 95±5 °F (35±3 °C).

[58 FR 16030, Mar. 24, 1993, as amended at 60 FR 34343, June 30, 1995; 60 FR 43890, Aug. 23, 1995]

§86.118–00 Dynamometer calibrations.

(a) The dynamometer shall be calibrated at least once each month or performance verified at least once each week and then calibrated as required.

(b) For large single roll electric dynamometers or equivalent dynamometer configurations, the dynamometer adjustment settings for each vehicle's emission test sequence shall be verified by comparing the force imposed during dynamometer operation with actual road load force.

[61 FR 54891, Oct. 22, 1996]

§86.118–78 Dynamometer calibration.

(a) The dynamometer shall be calibrated at least once each month or performance verified at least once each week and then calibrated as required. The calibration shall consist of the manufacturer's recommended calibration procedure plus a determination of the dynamometer frictional power absorption at 50.0 mph (80.5 km/h). One method for determining dynamometer frictional power absorption at 50.0 mph

(80.5 km/h) is described below, other methods may be used if shown to yield equivalent results. The measured absorbed road power includes the dynamometer friction as well as the power absorbed by the power absorption unit. The dynamometer is driven above the test speed range. The device used to drive the dynamometer is then disengaged from the dynamometer and the roll(s) is (are) allowed to coast down. The kinetic energy of the system is dissipated by the dynamometer. This method neglects the variations in roll bearing friction due to the drive axle weight of the vehicle. The inertia of the free (rear) roll may be neglected in the case of dynamometers with paired rolls.

(1) Devise a method to determine the speed of the drive roll if it is not already measured. A fifth wheel, revolution pickup, or other suitable means may be used.

(2) Place a vehicle on the dynamometer or devise another method of driving the dynamometer.

(3) Engage the inertial flywheel or other inertial simulation system for the most common vehicle mass category for which the dynamometer is used. In addition other vehicle mass categories may be calibrated, if desired.

(4) Drive the dynamometer up to 50.0 mph (80.5 km/h).

(5) Record indicated road power.

(6) Drive the dynamometer up to 60.0 mph (96.9 km/h).

(7) Disengage the device used to drive the dynamometer.

(8) Record the time for the dynamometer drive roll to coastdown from 55.0 mph (88.5 km/h) to 45 mph (72.4 km/h).

(9) Adjust the power absorption unit to a different level.

(10) Repeat steps (4) to (9) above sufficient times to cover the range of road power used.

(11) Calculate absorbed road power (HP_d). See paragraph (c) of this section.

(12) Plot indicated road load power at 50 mph (80.5 km/h) versus road load power at 50 mph (80.5 km/h) as shown in Figure B78–5.

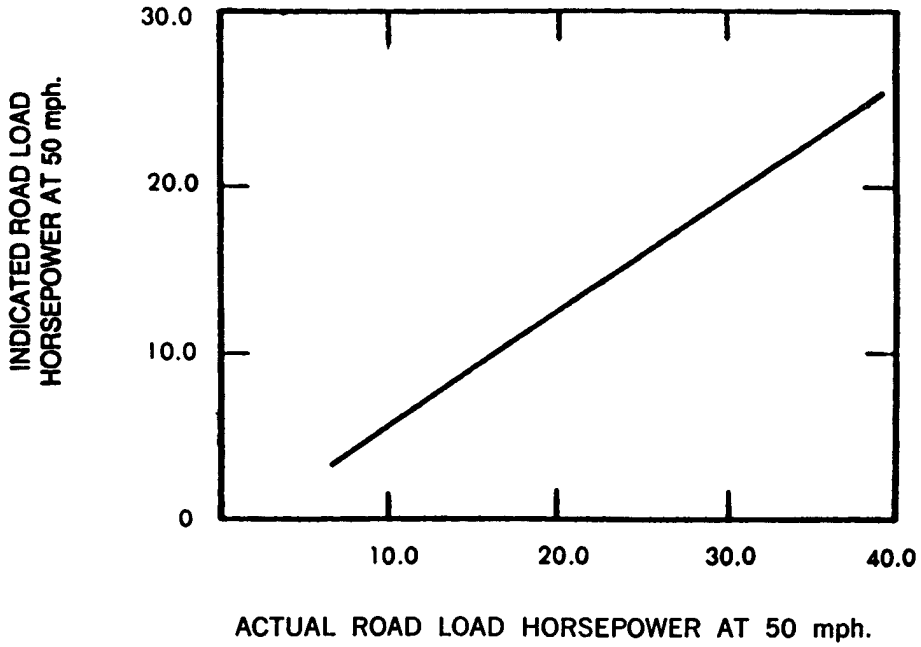

FIGURE B78-5—ROAD LOAD HORSEPOWER, ACTUAL VS. INDICATED

(b) The performance check consists of conducting a dynamometer coastdown at one or more inertia-horsepower settings and comparing the coastdown time to that recorded during the last calibration. If the coastdown times differ by more than 1 s, a new calibration is required.

(c) *Calculations.* The road load power actually absorbed by the dynamometer is calculated from the following equation:

$$HP_d = (1/2)\ (W/32.2)\ (V^2_1 - V^2_2)/(550t)$$

where:

HP_d = Power, horsepower (kilowatts)

W = Equivalent inertia, 1b (kg)

V_1 = Initial Velocity, ft/s (m/s) (55 mph = 88.5 km/h = 80.67 ft/s = 24.58 m/s)

V_2 = Final Velocity, ft/s (m/s) (45 mph = 72.4 km/h = 66 ft/s = 20.11 m/s)

t = elapsed time for rolls to coast from 55 mph to 45 mph (88.5 to 72.4 km/h)

(Expressions in parentheses are for SI units.) When the coastdown is from 55 to 45 mph (88.5 to 72.4 km/h) the above equation reduces to:

$$HP_d = 0.06073\ (W/t)$$

for SI units,

$$HP_d = 0.09984\ (W/t)$$

[42 FR 32954, June 28, 1977, as amended at 53 FR 475, Jan. 7, 1988]

§86.119–90 CVS calibration.

The CVS is calibrated using an accurate flowmeter and restrictor valve. Measurements of various parameters are made and related to flow through the unit. Procedures used by EPA for both PDP and CFV are outlined below. Other procedures yielding equivalent results may be used if approved in advance by the Administrator. After the calibration curve has been obtained,

verification of the entire system can be performed by injecting a known mass of gas into the system and comparing the mass indicated by the system to the true mass injected. An indicated error does not necessarily mean that the calibration is wrong, since other factors can influence the accuracy of the system, *e.g.*, analyzer calibration. A verification procedure is found in paragraph (c) of this section.

(a) *PDP calibrations.* (1) The following calibration procedure outlines the equipment, the test configuration, and the various parameters which must be measured to establish the flow rate of the CVS pump. All the parameters related to the pump are simultaneously measured with the parameters related to a flowmeter which is connected in series with the pump. The calculated flow rate ft^3/min (at pump inlet absolute pressure and temperature) can then be plotted versus a correlation function which is the value on a specific combination of pump parameters. The linear equation which relates the pump flow and the correlation function is then determined. In the event that a CVS has a multiple speed drive, a calibration for each range used must be performed.

(2) This calibration procedure is based on the measurement of the absolute values of the pump and flowmeter parameters that relate the flow rate at each point. Three conditions must be maintained to assure the accuracy and integrity of the calibration curve. First, the pump pressures should be measured at taps on the pump rather than at the external piping on the pump inlet and outlet. Pressure taps that are mounted at the top center and bottom center of the pump drive headplate are exposed to the actual pump cavity pressures, and therefore reflect the absolute pressure differentials. Secondly, temperature stability must be maintained during the calibration. The laminar flowmeter is sensitive to inlet temperature oscillations which cause the data points to be scattered. Gradual changes (±2 °F (1.1 °C)) in temperature are acceptable as long as they occur over a period of several minutes. Finally, all connections between the flowmeter and the CVS pump must be absolutely void of any leakage.

(3) During an exhaust emission test the measurement of these same pump parameters enables the user to calculate the flow rate from the calibration equation.

(4) Connect a system as shown in Figure B90–8. Although particular types of equipment are shown, other configurations that yield equivalent results may be used if approved in advance by the Administrator. For the system indicated, the following data with given accuracy are required:

CALIBRATION DATA MEASUREMENTS

Parameter	Symbol	Units	Tolerances
Barometric pressure (corrected)	P_B	in. Hg (kPa)	±0.01 in. Hg (±0.034 kPa)
Ambient temperature	T_A	°F(°C)	±0.5 °F (±0.28 °C)
Air temperature into LFE	ETI	°F(°C)	±0.25 °F (±0.14 °C)
Pressure depression upstream of LFE	EPI	in. H_2O (kPa)	±0.05 in. H_{20} (±0.012 kPa)
Pressure drop across the LFE matrix	EDP	in. H_2O (kPa)	±0.005 in. H_2O (±0.001 kPa)
Air temperature at CVS pump inlet	PTI	°F(°C)	±0.5 °F (±0.3 °C)
Pressure depression at CVS pump inlet	PPI	in. fluid (kPa)	±0.05 in. fluid (±0.022 kPa)
Specific gravity of manometer fluid (1.75 oil)	Sp. Gr.		
Pressure head at CVS pump outlet	PPO	in. fluid (kPa)	±0.05 in. fluid (±0.022 kPa)
Air temperature at CVS pump outlet (optional)	PTO	°F(°C)	±0.5 °F (±0.28 °C)
Pump revolutions during test period	N	Revs	±1 Rev.
Elapsed time for test period	t	sec	±0.05 sec.

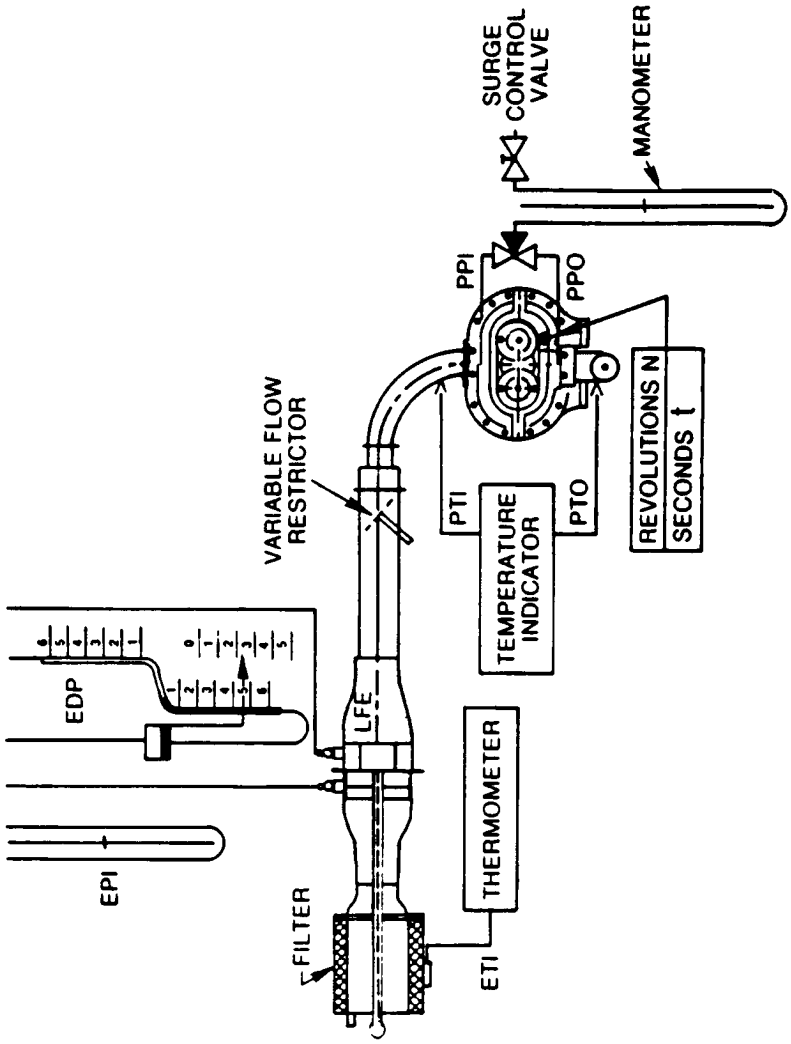

FIGURE B90-8 PDP-CVS CALIBRATION CONFIGURATION

(5) After the system has been connected as shown in Figure B90–8, set the variable restrictor in the wide open position and run the CVS pump for 20 minutes. Record the calibration data.

(6) Reset the restrictor valve to a more restricted condition in an increment of pump inlet depression (about 4 in. H_2O (1.0 kPa) that will yield a minimum of six data points for the total calibration. Allow the system to stabilize for 3 minutes and repeat the data acquisition.

(7) Data analysis:

(i) The air flow rate, Q_s, at each test point is calculated in standard cubic feet per minute from the flowmeter data using the manufacturer's prescribed method.

(ii) The air flow rate is then converted to pump flow, V_o, in cubic feet per revolution at absolute pump inlet temperature and pressure:

$V_o = (Q_s/n) \times (T_p/528) \times (29.92/P_p)$

Where:

(A) V_o = Pump flow ft^3/rev (m^3/rev) at T_p, P_p.

(B) Q_s = Meter air flow rate in standard cubic feet per minute, standard conditions are 68 °F, 29.92 in. Hg (20 °C, 101.3 kPa).

(C) n = Pump speed in revolutions per minute.

(D)(*1*) T_p = Pump inlet temperature, °R(°K) = PTI + 460.

(*2*) *For SI units,* T_p = PTI + 273.

(E)(*l*) P_p = Absolute pump inlet pressure, in. Hg. (kPa) = P_B − PPI (SP.GR./13.57).

(*2*) *For SI units,* $P_p = P_B$ − PPI.

Where:

(F) P_B = barometric pressure, in. Hg. (kPa).

(G) PPI = Pump inlet depression, in. fluid (kPa).

(H) SP.GR. = Specific gravity of manometer fluid relative to water.

(iii) The correlation function at each test point is then calculated from the calibration data:

$$X_o = \frac{1}{n}\sqrt{\frac{\Delta P}{P_e}}$$

Where:

(A) X_o = correlation function.

(B) ΔP_p = the pressure differential from pump inlet to pump outlet, in. Hg (kPa) = $P_e - P_p$.

(C)(*1*) P_e = Absolute pump outlet pressure, in Hg, (kPa) = $_{PB}$ + PPO (SP.GR./13.57).

(*2*) *For SI units,* $P_e = P_B$ + PPO.

Where:

(D) PPO = Pressure head at pump outlet, in. fluid (kPa).

(iv) A linear least squares fit is performed to generate the calibration equations which have the forms:

$V_o = D_o - M(X_o)$

$n = A - B(\Delta P_p)$

D_o, M, A, and B are the slope-intercept constants describing lines.

(8) A CVS system that has multiple speeds should be calibrated on each speed used. The calibration curves generated for the ranges will be approximately parallel and the intercept values, D_o, will increase as the pump flow range decreases.

(9) If the calibration has been performed carefully, the calculated values from the equation will be within ±0.50 percent of the measured value of V_o. Values of M will vary from one pump to another, but values of D_o for pumps of the same make, model, and range should agree within ±3 percent of each other. Particulate influx from use will cause the pump slip to decrease as reflected by lower values for M. Calibrations should be performed at pump start-up and after major maintenance to assure the stability of the pump slip rate. Analysis of mass injection data will also reflect pump slip stability.

(b) *CFV calibration.* (1) Calibration of the CFV is based upon the flow equation for a critical venturi. Gas flow is a function of inlet pressure and temperature:

$$Q_s = \frac{K_v P}{\sqrt{T}}$$

Where:

(i) Q_s=Flow.

(ii) K_v=Calibration coefficient.

(iii) P=Absolute pressure.

(iv) T=Absolute temperature.

The calibration procedure described below establishes the value of the calibration coefficient at measured values of pressure, temperature and air flow.

(2) The manufacturer's recommended procedure shall be followed for calibrating electronic portions of the CFV.

(3) Measurements necessary for flow calibration are as follows:

CALIBRATION DATA MEASUREMENTS

Parameter	Symbol	Units	Tolerances
Barometric pressure (corrected)	P_b	Inches Hg (kPa)	±.01 in Hg (±.034 kPa).
Air temperature, flowmeter	ETI	°F (°C)	±.25°F (±.14 °C).
Pressure depression upstream of LFE	EPI	Inches H2O (kPa)	±.05 in H_2O (±.012 kPa).
Pressure drop across LFE matrix	EDP	Inches H2O (kPa)	±.005 in H_2O (±.001 kPa).
Air flow	Q_s	Ft^3/min. (m^3/min,)	±.5 pct.
CFV inlet depression	PPI	Inches fluid (kPa)	±.13 in fluid (±.055 kPa).
Temperature at venturi inlet	T_v	°F (°C)	±0.5 °F (±.28 °C).
Specific gravity of manometer fluid (1.75 oil)	Sp. Gr		

(4) Set up equipment as shown in Figure B90–9 and check for leaks. Any leaks between the flow measuring device and the critical flow venturi will seriously affect the accuracy of the calibration.

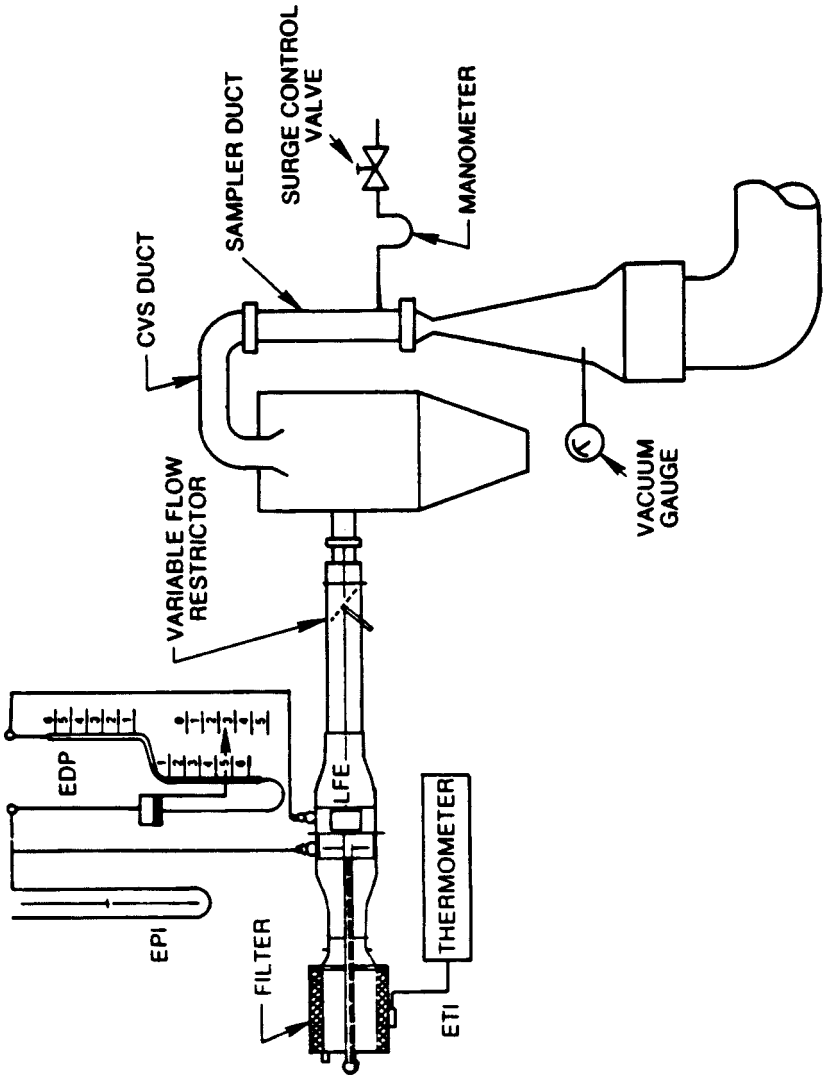

FIGURE B90-9 CFV-CVS CALIBRATION CONFIGURATION

(5) Set the variable flow restrictor to the open position, start the blower, and allow the system to stabilize. Record data from all instruments.

(6) Vary the flow restrictor and make at least 8 readings across the critical flow range of the venturi.

(7) *Data analysis:* The data recorded during the calibration are to be used in the following calculations:

(i) The air flow rate, Q_s, at each test point is calculated in standard cubic feet per minute from the flow meter data using the manufacturer's prescribed method.

(ii) Calculate values of the calibration coefficient for each test point:

$$K_v = \frac{Q_s\sqrt{T_v}}{P_v}$$

Where:

(A) Q_s = Flow rate in standard cubic feet per minute, standard conditions are 68 °F 29.92 in. Hg (20 °C, 101.3 kPa).

(B) T_v = Temperature at venturi inlet, °R(°K).

(C)(*1*) P_v = Pressure at venturi inlet, mm Hg (kPa) = P_B − PPI (SP.GR./13.57).

(*2*) *For SI units,* P_v = P_B − PPI.

Where:

(D) PPI = Venturi inlet pressure depression, in. fluid (kPa).

(E) SP.GR. = Specific gravity of manometer fluid, relative to water.

(iii) Plot K_v as a function of venturi inlet pressure. For sonic flow K_v will have a relatively constant value. As pressure decreases (vacuum increases), the venturi becomes unchoked and K_v decreases. See Figure B90–10.

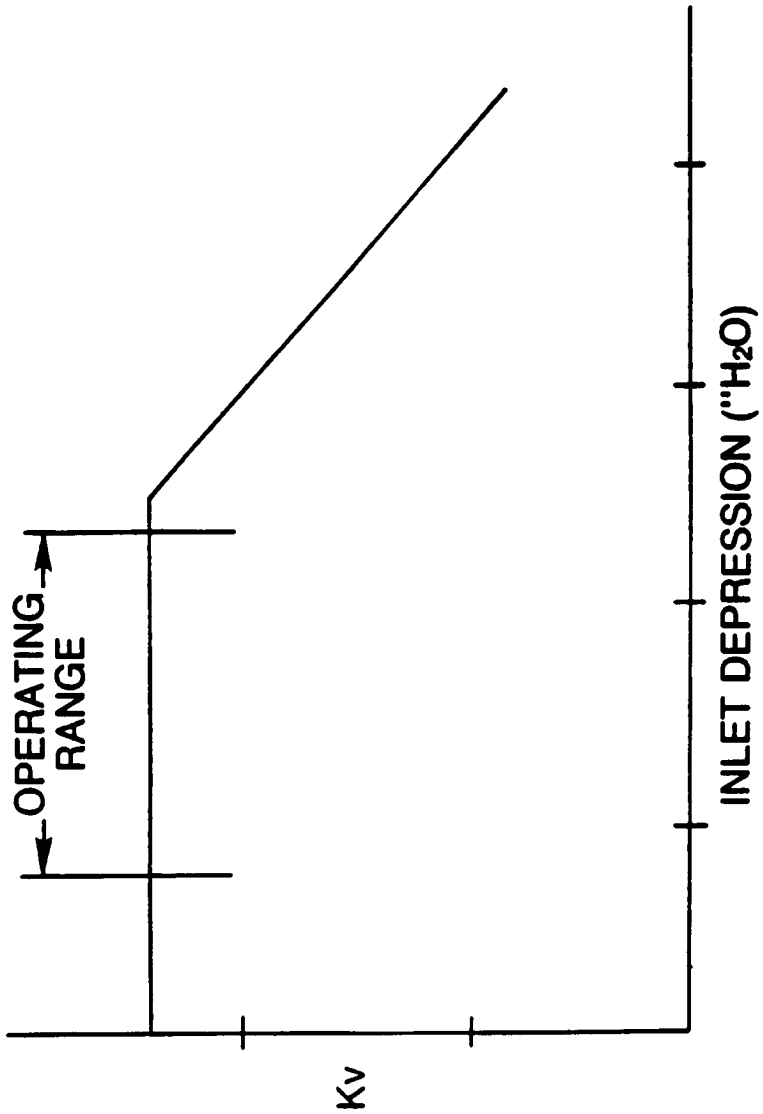

FIGURE B90-10 SONIC FLOW CHOKING

(iv) For a minimum of 8 points in the critical region calculate an average K_v and the standard deviation.

(v) If the standard deviation exceeds 0.3 percent of the average K_v take corrective action.

(c) *CVS System Verification.* The following ''gravimetric'' technique can be used to verify that the CVS and analytical instruments can accurately measure a mass of gas that has been injected into the system. If the CVS and analytical system will be used only in the testing of petroleum-fueled engines, the system verification may be

performed using either propane or carbon monoxide. If the CVS and analytical system will be used with methanol-fueled vehicles as well as petroleum-fueled vehicles, system verification performance check must include a methanol check in addition to either the propane or carbon monoxide check. (Verification can also be accomplished by constant flow metering using critical flow orifice devices.)

(1) Obtain a small cylinder that has been charged with pure propane or carbon monoxide gas (CAUTION—carbon monoxide is poisonous).

(2) Determine a reference cylinder weight to the nearest 0.01 grams.

(3) Operate the CVS in the normal manner and release a quantity of pure propane or carbon monoxide into the system during the sampling period (approximately 5 minutes).

(4) Following completion of step (3) in this paragraph (c) (if methanol injection is required), continue to operate the CVS in the normal manner and release a known quantity of pure methanol (in gaseous form) into the system during the sampling period (approximately five minutes). This step does not need to be performed with each verification, provided that it is performed at least twice annually.

(5) The calculations of §86.144 are performed in the normal way, except in the case of propane. The density of propane (17.30 g/ft^3/carbon atom (0.6109 kg/m^3/carbon atom)) is used in place of the density of exhaust hydrocarbons. In the case of carbon monoxide, the density of 32.97 g/ft^3 (1.164 kg/m^3) is used. In the case of methanol, the density of 37.71 g/ft^3 (1.332 kg/m^3) is used.

(6) The gravimetric mass is subtracted from the CVS measured mass and then divided by the gravimetric mass to determine the percent accuracy of the system.

(7) The cause for any discrepancy greater than ±2 percent must be found and corrected. (For 1991–1995 calendar years, discrepancies greater than ±2 percent are allowed for the methanol test, provided that they do not exceed ±8 percent for 1991 testing or ±6 percent for 1992–1995 testing.)

[54 FR 14518, Apr. 11, 1989, as amended at 60 FR 34344, June 30, 1995; 62 FR 47121, Sept. 5, 1997; 63 FR 24448, May 4, 1998]

§86.120–82 Gas meter or flow instrumentation calibration, particulate measurement.

Sampling for particulate emissions requires the use of gas meters or flow instrumentation to measure flow through the particulate filters. The meters or instrumentation shall receive initial and periodic calibrations as follows:

(a) Install a standard air flow measurement device upstream of the gas meter or instrument being calibrated. This standard device shall measure air flow at standard conditions with an accuracy of ±1 percent. Standard conditions are defined as 68 °F (20 °C) and 29.92 in. Hg (101.3 kPa). A critical flow orifice, a bellmouth, or a laminar flow element is recommended as the standard device.

(b) Flow air through the calibration system at the sample flow rate used for particulate testing and at the backpressure which occurs during the sample test.

(c) When the temperature and pressure in the system have stabilized, measure the gas meter or instrument indicated volume over a time period of at least 5 minutes and until a flow volume of at least ±1 percent accuracy can be determined by the standard device. Record the stabilized air temperature and pressure upstream of the gas meter or instrument being calibrated and as required for the standard device.

(d) Calculate air flow at standard conditions as measured by both the standard device and the gas meter or instrument being calibrated.

(e) Repeat the procedures of paragraphs (b) through (d) of this section using flow rates which are 10 percent above the nominal sampling flow rate and 10 percent below the nominal sampling flow rate.

(f) If the air flow at standard conditions measured by the gas meter or instrument being calibrated differs by more than ±1 percent from the standard measurement at any of the three measured flow rates, then a correction shall be made by either of the following two methods:

(1) Mechanically adjust the gas meter or instrument so that it agrees within 1 percent of the standard measurement at the three specified flow rates, or

(2) Develop a continuous best fit calibration curve for the gas meter (as a function of the standard device flow measurement) from the three calibration points that represents the data to within 1 percent at all points to determine corrected flow.

(g) *Other systems.* A bell prover may be used to calibrate the gas meter if the procedure outlined in ANSI B109.1–1973 is used. Prior approval by the Administrator is not required to use the bell prover.

[45 FR 14515, Mar. 5, 1980]

§ 86.120–94 Gas meter or flow instrumentation calibration; particulate, methanol and formaldehyde measurement.

(a) Sampling for particulate, methanol and formaldehyde emissions requires the use of gas meters or flow instrumentation to determine flow through the particulate filters, methanol impingers and formaldehyde impingers. These instruments shall receive initial and periodic calibrations as follows:

(1)(i) Install a calibration device in series with the instrument. A critical flow orifice, a bellmouth nozzle, a laminar flow element or an NBS traceable flow calibration device is required as the standard device.

(ii) The flow system should be checked for leaks between the calibration and sampling meters, including any pumps that may be part of the system, using good engineering practice.

(2) Flow air through the calibration system at the sample flow rate used for particulate, methanol, and formaldehyde testing and at the backpressure which occurs during the test.

(3) When the temperature and pressure in the system have stabilized, measure the indicated gas volume over a time period of at least five minutes or until a gas volume of at least ±1 percent accuracy can be determined by the standard device. Record the stabilized air temperature and pressure upstream of the instrument and as required for the standard device.

(4) Calculate air flow at standard conditions as measured by both the standard device and the instrument(s). (Standard conditions are defined as 68 °F (20 °C) and 29.92 in Hg (101.3 kPa).)

(5) Repeat the procedures of paragraphs (a)(2) through (4) of this section using at least two flow rates which bracket the typical operating range.

(6) If the air flow at standard conditions measured by the instrument differs by ±1.0 percent of the maximum operating range or ±2.0 percent of the point (whichever is smaller), then a correction shall be made by either of the following two methods:

(i) Mechanically adjust the instrument so that it agrees with the calibration measurement at the specified flow rates using the criteria of paragraph (a)(6) of this section; or

(ii) Develop a continuous best fit calibration curve for the instrument (as a function of the calibration device flow measurement) from the calibration points to determine corrected flow. The points on the calibration curve relative to the calibration device measurements must be within ±1.0 percent of the maximum operating range of ±2.0 percent of the point (whichever is smaller).

(b) Other systems. A bell prover may be used to calibrate the instrument if the procedure outlined in ANSI B109.1–1973 is used. Prior approval by the Administrator is not required to use the bell prover.

[60 FR 34344, June 30, 1995]

§ 86.121–82 Hydrocarbon analyzer calibration.

The hydrocarbon analyzers shall receive the following initial and periodic calibration. The HFID shall be operated at a temperature of 375±10 °F (191±6 °C).

(a) *Initial and periodic optimization of FID and HFID response.* Prior to its introduction into service and at least annually thereafter, the FID and HFID hydrocarbon analyzers shall be adjusted for optimum hydrocarbon response. Alternate methods yielding equivalent results may be used, if approved in advance by the Administrator.

(1) Follow the manufacturer's instructions or good engineering practice for instrument startup and basic operating adjustment using the appropriate fuel and zero-grade air.

(2) Optimize on the most common operating range. Introduce into the analyzer a propane in air mixture with a propane concentration equal to approximately 90 percent of the most common operating range.

(3) One of the following is required for FID or HFID optimization:

(i) For all FIDs and HFIDs, the procedures specified by the applicable FID or HFID manufacturer.

(ii) For Beckman 400 FIDs only, implementation of the recommendations outlined in Society of Automotive Engineers (SAE) paper No. 770141, ''Optimization of Flame Ionization Detector for Determination of Hydrocarbons in Diluted Automobile Exhaust;'' author, Glenn D. Reschke.

(iii) For HFIDs only, the following peaking procedure. (A) With the fuel and air flow rates set at the manufacturer's recommendations, determine the analyzer response from the difference between the span-gas response and the zero gas response. Incrementally adjust the fuel flow above and below the manufacturer's specification. Record the span and zero response at these fuel flows. A plot of the difference between the span and zero response versus the fuel flow will be similar to the one shown in Fig. B87–11. Adjust the fuel-flow rate to the highest setting that produces the maximum analyzer response.

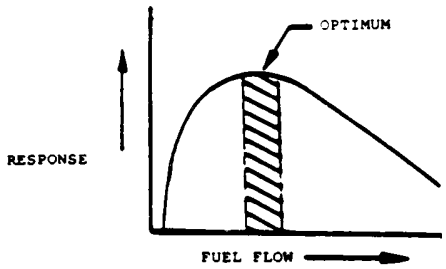

FIGURE B87-11 RESPONSE VS. FUEL FLOW

(B) To determine the optimum air flow, use the fuel flow setting determined in paragraph (a)(3)(iii)(A) of this section and vary air flow.

(iv) Alternative procedures may be used if approved in advance by the Administrator.

(4) After the optimum flow rates have been determined, record them for future reference.

(b) *Initial and periodic calibration.* Prior to its introduction into service and monthly thereafter the FID or HFID hydrocarbon analyzers shall be calibrated on all normally used instrument ranges. Use the same flow rate as when analyzing samples.

(1) Adjust analyzer to optimize performance.

(2) Zero the hydrocarbon analyzer with zero-grade air.

(3) Calibrate on each normally used operating range with propane in air calibration gases having nominal concentrations of 15, 30, 45, 60, 75, and 90 percent of that range. For each range calibrated, if the deviation from a least squares best-fit straight line is 2 percent or less of the value at each data point, concentration values may be calculated by use of a single calibration factor for that range. If the deviation exceeds 2 percent at any point, the best-fit non-linear equation which represents the data to within 2 percent of each test point shall be used to determine concentration.

[45 FR 14516, Mar. 5, 1980, as amended at 54 FR 2122, Jan. 19, 1989]

§86.121–90 Hydrocarbon analyzer calibration.

The hydrocarbon analyzers shall receive the following initial and periodic calibration. The HFID used with petroleum-fueled diesel vehicles shall be operated at a temperature of 375 °F±10 °F (191 °±6 °C). The HFID used with methanol-fueled vehicles shall be operated at 235 °±15 °F (113±8 °C).

(a) *Initial and periodic optimization of detector response.* Prior to its introduction into service and at least annually thereafter, the FID and HFID hydrocarbon analyzers shall be adjusted for optimum hydrocarbon response. Alternate methods yielding equivalent results may be used, if approved in advance by the Administrator.

(1) Follow the manufacturer's instructions or good engineering practice for instrument startup and basic operating adjustment using the appropriate FID fuel and zero-grade air.

(2) Optimize on the most common operating range. Introduce into the analyzer a propane (methane as appropriate) in air mixture (methanol in air mixture for methanol-fueled vehicles when optional methanol calibrated HFID procedure is used during the 1994 model year) with a propane (or methane or methanol as appropriate) concentration equal to approximately 90 percent of the most common operating range.

(3) One of the following is required for FID or HFID optimization:

(i) For all FIDs and HFIDs, the procedures specified by the applicable FID or HFID manufacturer.

(ii) For Beckman 400 FIDs only, implementation of the recommendations outlined in Society of Automotive Engineers (SAE) paper No. 770141, ''Optimization of Flame Ionization Detector for Determination of Hydrocarbons in Diluted Automobile Exhaust''; author, Glenn D. Reschke.

(iii) For HFIDs only, the following peaking procedure. (A) With the fuel and air flow rates set in the manufacturer's recommendations, determine the analyzer response from the difference between the span-gas response and the zero gas response. Incrementally adjust the fuel flow above and below the manufacturer's specification. Record the span and zero response at these fuel flows. A plot of the difference between the span and zero response versus the fuel flow will be similar to the one shown in Fig. B87–11. Adjust the fuel-flow rate to the highest setting that produces the maximum analyzer response.

(B) To determine the optimum air flow, use the fuel flow setting determined in paragraph (a)(3)(iii)(A) of this section and vary air flow.

(iv) Alternative procedures may be used if approved in advance by the Administrator.

(4) To determine the optimum air flow, use the FID fuel flow setting determined above and vary air flow.

(5) After the optimum flow rates have been determined, record them for future reference.

(b) *Initial and periodic calibration.* Prior to its introduction into service and monthly thereafter the FID or HFID hydrocarbon analyzers shall be calibrated on all normally used instrument ranges, and, if testing methanol vehicles under the procedure described in § 86.107–90(a)(2)(ii) or § 86.110–90(a)(4), the methanol response factor shall be determined (paragraph (c) of this section). Use the same flow rate as when analyzing sample.

(1) Adjust analyzer to optimize performance.

(2) Zero the hydrocarbon analyzer with zero-grade air.

(3) Calibrate on each normally used operating range with propane in air calibration gases (either methanol or methane in air as appropriate) having nominal concentrations of 15, 30, 45, 60, 75 and 90 percent of that range. For each range calibrated, if the deviation from a least squares best-fit straight line is two percent or less of the value at each data point, concentration values may be calculated by use of a single calibration factor for that range. If the deviation exceeds two percent at any point, the best-fit non-linear equation which represents the data to within two percent of each test point shall be used to determine concentration.

(c) *FID response factor to methanol.* When the FID analyzer is to be used for the analysis of hydrocarbon samples containing methanol, the methanol response factor of the analyzer shall be established. The methanol response factor shall be determined at several concentrations in the range of concentrations in the exhaust sample, using either bag samples or gas bottles meeting the requirements of § 86.114.

(1) The bag sample of methanol for analysis in the FID, if used, shall be prepared using the apparatus shown in Figure B90–11. A known volume of methanol is injected, using a microliter syringe, into the heated mixing zone (250 °F (121 °C)) of the apparatus. The methanol is vaporized and swept into the sample bag with a known volume of zero grade air measured by a gas flow meter meeting the performance requirements of § 86.120.

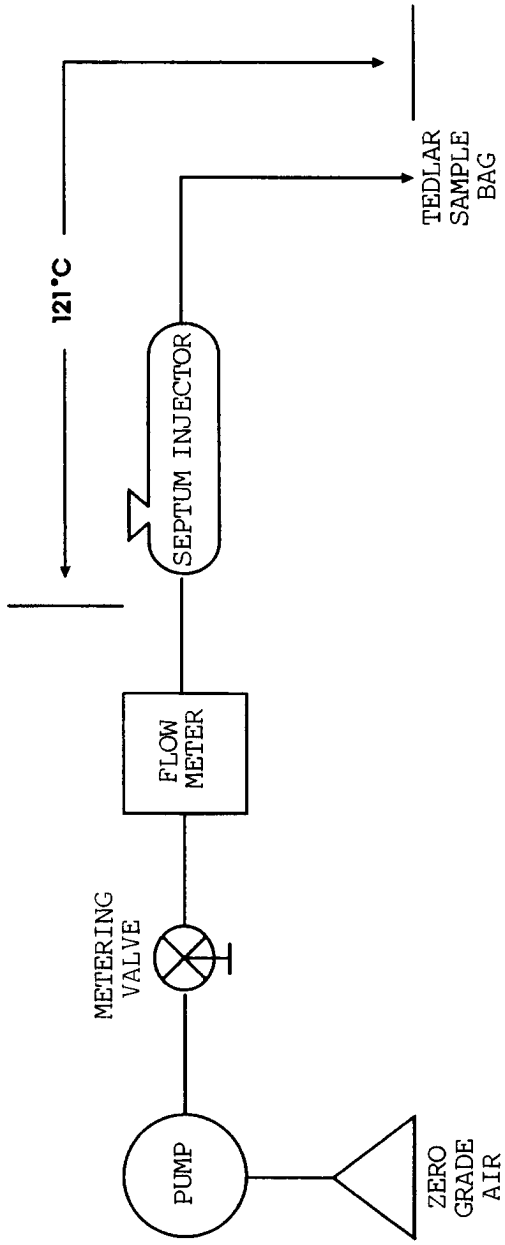

FIGURE B90-11 APPARATUS FOR PREPARATION OF FID METHANOL RESPONSE CALIBRATION MIX

(2) The bag sample is analyzed using the FID.

(3) The FID response factor, r, is calculated as follows:

r = FIDppm/SAMppm

Where:

(i) r = FID response factor.

(ii) FIDppm = FID reading in ppmC.

(iii) SAMppm=methanol concentration in the sample bag, or gas bottle, in ppmC. SAMppm for sample bags

$$= \frac{0.02406 \times \text{Fuel injected} \times \text{Fuel density}}{\text{Air volume} \times \text{Mol. Wt. } CH_3OH}$$

Where:

(iv) 0.02406 = Volume of one mole at 29.92 in. Hg and 68 °F, m^3.

(v) Fuel injected = Volume of methanol injected, ml.

(vi) Fuel density = Density of methanol, 0.7914 g/ml.

(vii) Air volume = Volume of zero grade air, m^3.

(viii) Mol. Wt. CH_3OH = 32.04.

(d) *FID response factor to methane.* When the FID analyzer is to be used for the analysis of natural gas-fueled vehicle hydrocarbon samples, the methane response factor of the analyzer shall be established. To determine the total hydrocarbon FID response to methane, known methane in air concentrations traceable to the National Institute of Standards and Technology (NIST) shall be analyzed by the FID. Several methane concentrations shall be analyzed by the FID in the range of concentrations in the exhaust sample. The total hydrocarbon FID response to methane is calculated as follows:

r_{CH4}=FIDppm/SAMppm

Where:

(1) r_{CH4}=FID response factor to methane.

(2) FIDppm=FID reading in ppmC.

(3) SAMppm=the known methane concentration in ppmC.

[54 FR 14525, Apr. 11, 1989, as amended at 59 FR 48508, Sept. 21, 1994; 60 FR 34345, June 30, 1995]

§ 86.122–78 Carbon monoxide analyzer calibration.

The NDIR carbon monoxide analyzer shall receive the following initial and periodic calibrations:

(a) *Initial and periodic interference check.* Prior to its introduction into service and annually thereafter the NDIR carbon monoxide analyzer shall be checked for response to water vapor and CO_2:

(1) Follow the manufacturer's instructions for instrument startup and operation. Adjust the analyzer to optimize performance on the most sensitive range to be used.

(2) Zero the carbon monoxide analyzer with either zero-grade air or zero-grade nitrogen.

(3) Bubble a mixture of 3 percent CO_2 in N_2 through water at room temperature and record analyzer response.

(4) An analyzer response of more than 1 percent of full scale for ranges above 300 ppm full scale or of more than 3 ppm on ranges below 300 ppm full scale will require corrective action. (Use of conditioning columns is one form of corrective action which may be taken.)

(b) *Initial and periodic calibration.* Prior to its introduction into service and monthly thereafter the NDIR carbon monoxide analyzer shall be calibrated.

(1) Adjust the analyzer to optimize performance.

(2) Zero the carbon monoxide analyzer with either zero-grade air or zero-grade nitrogen.

(3) Calibrate on each normally used operating range with carbon monoxide in N_2 calibration gases having nominal concentrations of 15, 30, 45, 60, 75, and 90 percent of that range. Additional calibration points may be generated. For each range calibrated, if the deviation from a least-squares best-fit straight line is 2 percent or less of the value at each data point, concentration values may be calculated by use of a single calibration factor for that range. If the deviation exceeds 2 percent at any point, the best-fit non-linear equation which represents the data to within 2 percent of each test point shall be used to determine concentration.

§ 86.123–78 Oxides of nitrogen analyzer calibration.

The chemiluminescent oxides of nitrogen analyzer shall receive the following initial and periodic calibration.

(a) Prior to introduction into service and at least monthly thereafter the chemiluminescent oxides of nitrogen analyzer must be checked for NO_2 to NO converter efficiency. Figure B78–9 is a reference for paragraphs (a) (1) through (11) of this section.

(1) Follow the manufacturer's instructions for instrument startup and

operation. Adjust the analyzer to optimize performance.

(2) Zero the oxides of nitrogen analyzer with zero-grade air or zero-grade nitrogen.

(3) Connect the outlet of the NO_X generator to the sample inlet of the oxides of nitrogen analyzer which has been set to the most common operating range.

(4) Introduce into the NO_X generator analyzer-system an NO in nitrogen (N_2) mixture with an NO concentration equal to approximately 80 percent of the most common operating range. The NO_2 content of the gas mixture shall be less than 5 percent of the NO concentration.

(5) With the oxides of nitrogen analyzer in the NO mode, record the concentration of NO indicated by the analyzer.

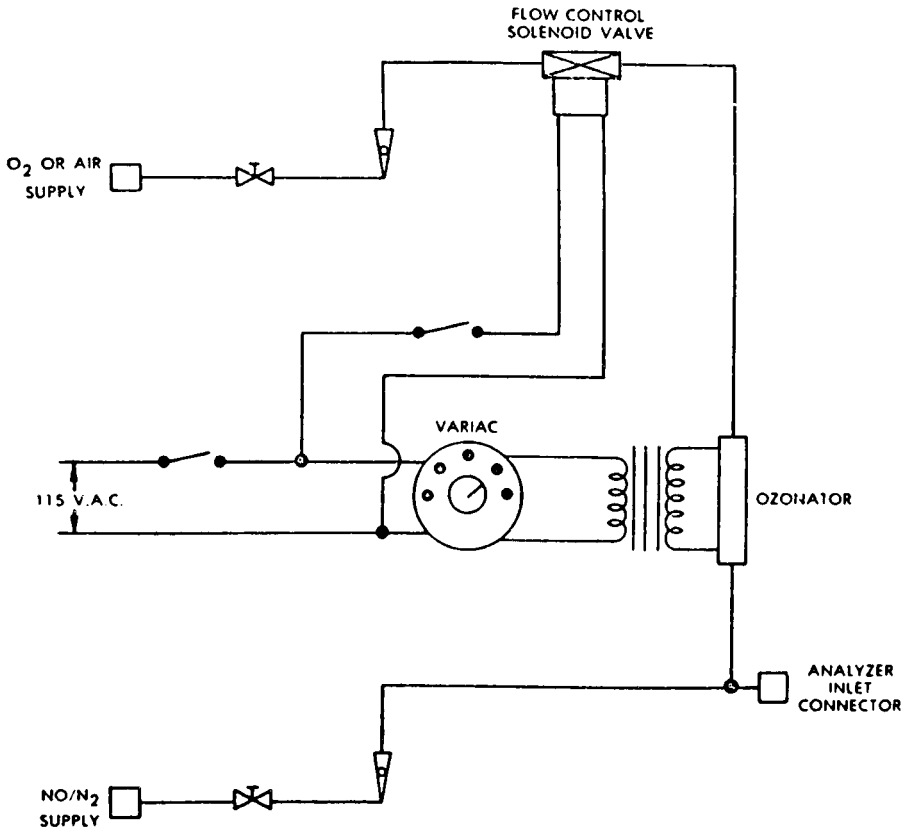

(SEE FIG B78-3 FOR SYMBOL LEGEND)

FIGURE B78-9—NOx CONVERTER EFFICIENCY DETECTOR

(6) Turn on the NO_X generator O_2 (or air) supply and adjust the O_2 (or air) flow rate so that the NO indicated by the analyzer is about 10 percent less than indicated in step (5). Record the concentration of NO in this NO + O_2 mixture.

(7) Switch the NO_X generator to the generation mode and adjust the generation rate so that the NO measured on the analyzer is 20 percent of that measured in step (5). There must be at least 10 percent unreacted NO at this point. Record the concentration of residual NO.

(8) Switch the oxides of nitrogen analyzer to the NO_X mode and measure total NO_X. Record this value.

(9) Switch off the NO_X generation but maintain gas flow through the system. The oxides of nitrogen analyzer will indicate the NO_X in the NO + O_2 mixture. Record this value.

(10) Turn off the NO_X generator O_2 (or air) supply. The analyzer will now indicate the NO_X in the original NO in N_2 mixture. This value should be no more than 5 percent above the value indicated in step (4).

(11) Calculate the efficiency of the NO_X converted by substituting the concentrations obtained into the following equation:

$$\text{Percent Efficiency} = [1 + (a-b)/(c-d)] \times 100$$

where:
a = concentration obtained in step (8).
b = concentration obtained in step (9).
c = concentration obtained in step (6).
d = concentration obtained in step (7).

If converter efficiency is not greater than 90 percent corrective action will be required.

(b) *Initial and periodic calibration.* Prior to its introduction into service and monthly thereafter the chemiluminescent oxides of nitrogen analyzer shall be calibrated on all normally used instrument ranges. Use the same flow rate as when analyzing samples. Proceed as follows:

(1) Adjust analyzer to optimize performance.

(2) Zero the oxides of nitrogen analyzer with zero-grade air or zero-grade nitrogen.

(3) Calibrate on each normally used operating range with NO in N2 calibration gases having nominal concentrations of 15, 30, 45, 60, 75, and 90 percent of that range. For each range calibrated, if the deviation from a least-squares best-fit straight line is 2 percent or less of the value at each data point, concentration values may be calculated by use of a single calibration factor for that range. If the deviation exceeds 2 percent at any point, the best-fit non-linear equation which represents the data to within 2 percent of each test point shall be used to determine concentration.

(c) When testing methanol-fueled vehicles, it may be necessary to clean the analyzer frequently to prevent interference with NO_X measurements (see EPA/600/S3–88/040).

[42 FR 32954, June 28, 1977, as amended at 42 FR 45652, Sept. 12, 1977; 52 FR 47869, Dec. 16, 1987; 58 FR 58422, Nov. 1, 1993; 60 FR 34347, June 30, 1995]

§ 86.124–78 Carbon dioxide analyzer calibration.

Prior to its introduction into service and monthly thereafter the NDIR carbon dioxide analyzer shall be calibrated:

(a) Follow the manufacturer's instructions for instrument startup and operation. Adjust the analyzer to optimize performance.

(b) Zero the carbon dioxide analyzer with either zero-grade air or zero-grade nitrogen.

(c) Calibrate on each normally used operating range with carbon dioxide in N_2 calibration gases with nominal concentrations of 15, 30, 45, 60, 75, and 90 percent of that range. Additional calibration points may be generated. For each range calibrated, if the deviation from a least-squares best-fit straight line is 2 percent or less of the value at each data point, concentration values may be calculated by use of a single calibration factor for that range. If the deviation exceeds 2 percent at any point, the best-fit non-linear equation which represents the data to within 2 percent of each test point shall be used to determine concentration.

§ 86.125–94 Methane analyzer calibration.

Prior to introduction into service and monthly thereafter, the methane analyzer shall be calibrated:

(a) Follow the manufacturer's instructions for instrument startup and operation. Adjust the analyzer to optimize performance.

(b) Zero the methane analyzer with zero-grade air.

(c) Calibrate on each normally used operating range with CH_4 in air with nominal concentrations of 15, 30, 45, 60, 75, and 90 percent of that range. Additional calibration points may be generated. For each range calibrated, if the deviation from a least-squares best-fit straight line is 2 percent or less of the value at each data point, concentration values may be calculated by use of a single calibration factor for that range. If the deviation exceeds 2 percent at any point, the best-fit nonlinear equation which represents the data to within 2 percent of each test point shall be used to determine concentration.

[56 FR 25774, June 5, 1991]

§86.126–90 Calibration of other equipment.

Other test equipment used for testing shall be calibrated as often as required by the manufacturer or as necessary according to good practice. Specific equipment requiring calibration are the gas chromatograph and flame ionization detector used in measuring methanol and the high pressure liquid chromatograph (HPLC) and ultraviolet detector for measuring formaldehyde.

[54 FR 14527, Apr. 11, 1989]

§86.127–00 Test procedures; overview.

Applicability. The procedures described in this and subsequent sections are used to determine the conformity of vehicles with the standards set forth in subpart A of this part for light-duty vehicles and light-duty trucks. Except where noted, the procedures of paragraphs (a) through (b) of this section, §86.127–96 (c) and (d), and the contents of §§86.135–94, 86.136–90, 86.137–96, 86.140–94, 86.142–90, and 86.144–94 are applicable for determining emission results for vehicle exhaust emission systems designed to comply with the FTP emission standards, or the FTP emission element required for determining compliance with composite SFTP standards. Paragraphs (f) and (g) of this section discuss the additional test elements of aggressive driving (US06) and air conditioning (SC03) that comprise the exhaust emission components of the SFTP. Section 86.127–96(e) discusses fuel spitback emissions and paragraphs (h) and (i) of this section are applicable to all vehicle emission test procedures. Section 86.127–00 includes text that specifies requirements that differ from §86.127–96. Where a paragraph in §86.127–96 is identical and applicable to §86.127–00, this may be indicated by specifying the corresponding paragraph and the statement ''[Reserved]. For guidance see §86.127–96.''

(a) The overall test consists of prescribed sequences of fueling, parking, and operating test conditions. Vehicles are tested for any or all of the following emissions:

(1) Gaseous exhaust THC, CO, NO_X, CO_2 (for petroleum-fueled and gaseous-fueled vehicles), plus CH_3OH and HCHO for methanol-fueled vehicles, plus CH_4 (for vehicles subject to the NMHC and NMHCE standards).

(2) Particulates.

(3) Evaporative HC (for gasoline-fueled, methanol-fueled and gaseous-fueled vehicles) and CH_3OH (for methanol-fueled vehicles). The evaporative testing portion of the procedure occurs after the exhaust emission test; however, exhaust emissions need not be sampled to complete a test for evaporative emissions.

(4) Fuel spitback (this test is not required for gaseous-fueled vehicles).

(b) The FTP Otto-cycle exhaust emission test is designed to determine gaseous THC, CO, CO_2, CH_4, NO_X, and particulate mass emissions from gasoline-fueled, methanol-fueled and gaseous-fueled Otto-cycle vehicles as well as methanol and formaldehyde from methanol-fueled Otto-cycle vehicles, while simulating an average trip in an urban area of 11 miles (18 kilometers). The test consists of engine start-ups and vehicle operation on a chassis dynamometer through a specified driving schedule (see paragraph (a), EPA Urban Dynamometer Driving Schedule, of appendix I to this part). A proportional part of the diluted exhaust is collected continuously for subsequent analysis,

using a constant volume (variable dilution) sampler or critical flow venturi sampler.

(c) through (e) ''[Reserved]. For guidance see § 86.127–96.''

(f) The element of the SFTP for exhaust emissions related to aggressive driving (US06) is designed to determine gaseous THC, NMHC, CO, CO_2, CH_4, and NO_X emissions from gasoline-fueled or diesel-fueled vehicles (see § 86.158–00 Supplemental test procedures; overview, and § 86.159–00 Exhaust emission test procedures for US06 emissions). The test cycle simulates urban driving speeds and accelerations that are not represented by the FTP Urban Dynamometer Driving Schedule simulated trips discussed in paragraph (b) of this section. The test consists of vehicle operation on a chassis dynamometer through a specified driving cycle (see paragraph (g), US06 Dynamometer Driving Schedule, of appendix I to this part). A proportional part of the diluted exhaust is collected continuously for subsequent analysis, using a constant volume (variable dilution) sampler or critical flow venturi sampler.

(g)(1) The element of the SFTP related to the increased exhaust emissions caused by air conditioning operation (SC03) is designed to determine gaseous THC, NMHC, CO, CO_2, CH_4, and NO_X emissions from gasoline-fueled or diesel fueled vehicles related to air conditioning use (see § 86.158–00 Supplemental federal test procedures; overview and § 86.160–00 Exhaust emission test procedure for SC03 emissions). The test cycle simulates urban driving behavior with the air conditioner operating. The test consists of engine startups and vehicle operation on a chassis dynamometer through specified driving cycles (see paragraph (h), SC03 Dynamometer Driving Schedule, of appendix I to this part). A proportional part of the diluted exhaust is collected continuously for subsequent analysis, using a constant volume (variable dilution) sampler or critical flow venturi sampler. The testing sequence includes an approved preconditioning cycle, a 10 minute soak with the engine turned off, and the SC03 cycle with measured exhaust emissions.

(2) The SC03 air conditioning test is conducted with the air conditioner operating at specified settings and the ambient test conditions of:

(i) Air temperature of 95 °F;

(ii) 100 grains of water/pound of dry air (approximately 40 percent relative humidity);

(iii) Simulated solar heat intensity of 850 W/m^2 (see § 86.161–00(d)); and

(iv) air flow directed at the vehicle that will provide representative air conditioner system condenser cooling at all vehicle speeds (see § 86.161–00(e)).

(3) Manufacturers have the option of simulating air conditioning operation during testing at other ambient test conditions provided they can demonstrate that the vehicle tail pipe exhaust emissions are representative of the emissions that would result from the SC03 cycle test procedure and the ambient conditions of paragraph (g)(2) of this section. The Administrator has approved two optional air conditioning test simulation procedures AC1 and AC2 (see § 86.162–00) for only the model years of 2000 through 2002. If a manufacturer desires to conduct simulation SC03 testing for model year 2003 and beyond, the simulation test procedure must be approved in advance by the Administrator (see §§ 86.162–00 and 86.163–00).

(h) Except in cases of component malfunction or failure, all emission control systems installed on or incorporated in a new motor vehicle shall be functioning during all procedures in this subpart. Maintenance to correct component malfunction or failure shall be authorized in accordance with § 86.090–25.

(i) Background concentrations are measured for all species for which emissions measurements are made. For exhaust testing, this requires sampling and analysis of the dilution air. For evaporative testing, this requires measuring initial concentrations. (When testing methanol-fueled vehicles, manufacturers may choose not to measure background concentrations of methanol and/or formaldehyde, and then assume that the concentrations are zero during calculations.)

[61 FR 54891, Oct. 22, 1996]

§86.127–90 Test procedures; overview.

The procedures described in this and subsequent sections are used to determine the conformity of vehicles with the standards set forth in subpart A for light-duty vehicles and light-duty trucks.

(a) The overall test consists of prescribed sequences of fueling, parking and operating conditions. Vehicles are tested for any or all of the following emissions:

(1) Gaseous exhaust HC, CO, NO_X, CO_2 (for petroleum-fueled vehicles), plus CH_3OH and HCHO for methanol-fueled vehicles (measurement of CH_3OH and HCHO may be omitted for 1990 through 1994 model year methanol-fueled vehicles provided a HFID calibrated on methanol is used for measuring HC plus CH_3OH).

(2) Particulates (diesel vehicles).

(3) Evaporative HC (for gasoline-fueled and methanol-fueled vehicles) and CH_3OH (for methanol-fueled vehicles). A separate CH_3OH measurement may be omitted for 1990 through 1994 model year methanol-fueled vehicles provided a HFID calibrated on methanol is used for measuring HC plus CH_3OH.

The evaporative portion of the test procedure occurs before and after the exhaust emission test, and in some cases, during the exhaust emission test.

(b) The Otto-cycle exhaust emission test is designed to determine gaseous hydrocarbon, carbon monoxide, carbon dioxide, and oxides of nitrogen mass emissions from gasoline-fueled and methanol-fueled vehicles as well as methanol and formaldehyde from methanol-fueled Otto-cycle vehicles while simulating an average trip in an urban area of 7.5 miles (12.1 kilometers). The test consists of engine startups and vehicle operation on a chassis dynamometer, through a specified driving schedule. A proportional part of the diluted exhaust is collected continuously for subsequent analysis, using a constant volume (variable dilution) sampler or critical flow venturi sampler.

(c) The diesel exhaust emission test is designed to determine particulate and gaseous mass emissions during a test similar to the test in §86.127(b). For petroleum-fueled vehicles, diluted exhaust is continuously analyzed for total hydrocarbons using a heated sample line and analyzer. The other gaseous emissions, CO, CO_2 and NO_X are collected continuously for analysis as in §86.127(b). For methanol-fueled vehicles, hydrocarbons, methanol, formaldehyde, CO, CO_2, and NO_X are collected continuously for analysis as in §86.127(b). Hydrocarbons, methanol and formaldehyde are collected using heated sample lines, and a heated FID is used for hydrocarbons analyses. Simultaneous with the gaseous exhaust collection and analysis, particulates from a proportional part of the diluted exhaust are collected continuously on a filter. The mass of particulate is determined by the procedure described in §86.139. This testing requires a dilution tunnel as well as the constant volume sampler.

(d) The evaporative emission test (gasoline-fueled vehicles and methanol-fueled vehicles) is designed to determine hydrocarbon and methanol evaporative emissions as a consequence of diurnal temperature fluctuation, urban driving, and hot soaks during parking. It is associated with a series of events representative of a motor vehicle's operation, which result in hydrocarbon and/or methanol vapor losses. The test procedure is designed to measure:

(1) Diurnal breathing losses resulting from daily temperature changes, measured by the enclosure technique;

(2) Running losses from suspected sources (if indicated by engineering analysis or vehicle inspection) resulting from a simulated trip on a chassis dynamometer, measured by carbon traps; and

(3) Hot soak losses, which result when the vehicle is parked and the hot engine is turned off, measured by the enclosure technique.

(e) Except in cases of component malfunction or failure, all emission control systems installed on or incorporated in a new motor vehicle shall be functioning during all procedures in this subpart. Maintenance to correct component malfunction or failure shall be authorized in accordance with §86.088–25.

[54 FR 14527, Apr. 11, 1989]

§ 86.127–94 Test procedures; overview.

The procedures described in this and subsequent sections are used to determine the conformity of vehicles with the standards set forth in subpart A of this part for light-duty vehicles and light-duty trucks.

(a) The overall test consists of prescribed sequences of fueling, parking, and operating conditions. Vehicles are tested for any or all of the following emissions:

(1) Gaseous exhaust THC, CO, NO_X, CO_2 (for petroleum-fueled vehicles), plus CH_3OH and HCHO for methanol-fueled vehicles, plus CH_4 (for vehicles subject to the NMHC and NMHCE standards). (Measurement of CH_3OH and HCHO may be omitted for 1990 through 1994 model year methanol-fueled vehicles provided a HFID calibrated on methanol is used for measuring THC plus CH_3OH.)

(2) Particulates.

(3) Evaporative HC (for gasoline-fueled and methanol-fueled vehicles) and CH_3OH (for methanol-fueled vehicles). A separate CH_3OH measurement may be omitted for 1990 through 1994 model year methanol-fueled vehicles provided a HFID calibrated on methanol is used for measuring HC plus CH_3OH.

(b) The Otto-cycle exhaust emission test is designed to determine gaseous THC, CO, CO_2, CH_4, NO_X, and particulate mass emissions from gasoline-fueled and methanol-fueled Otto-cycle vehicles as well as methanol and formaldehyde from methanol-fueled Otto-cycle vehicles, while simulating an average trip in an urban area of 7.5 miles (12.1 kilometers). The test consists of engine startups and vehicle operation on a chassis dynamometer, through a specified driving schedule. A proportional part of the diluted exhaust is collected continuously for subsequent analysis, using a constant volume (variable dilution) sampler or critical flow venturi sampler.

(c) The diesel-cycle exhaust emission test is designed to determine particulate and gaseous mass emissions during a test similar to the test in § 86.127(b). For petroleum-fueled diesel-cycle vehicles, diluted exhaust is continuously analyzed for THC using a heated sample line and analyzer; the other gaseous emissions (CH_4, CO, CO_2, and NO_X) are collected continuously for analysis as in § 86.127(b). For methanol-fueled vehicles, THC, methanol, formaldehyde, CO, CO_2, CH_4, and NO_X are collected continuously for analysis as in § 86.127(b). THC, methanol, and formaldehyde are collected using heated sample lines, and a heated FID is used for THC analyses. Simultaneous with the gaseous exhaust collection and analysis, particulates from a proportional part of the diluted exhaust are collected continuously on a filter. The mass of particulate is determined by the procedure described in § 86.139. This testing requires a dilution tunnel as well as the constant volume sampler.

(d) The evaporative emission test (gasoline-fueled vehicles and methanol-fueled vehicles) is designed to determine hydrocarbon and methanol evaporative emissions as a consequence of diurnal temperature fluctuation, urban driving, and hot soaks during parking. It is associated with a series of events representative of a motor vehicle's operation, which result in hydrocarbon and/or methanol vapor losses. The test procedure is designed to measure:

(1) Diurnal breathing losses resulting from daily temperature changes, measured by the enclosure technique;

(2) Running losses from suspected sources (if indicated by engineering analysis or vehicle inspection) resulting from a simulated trip on a chassis dynamometer, measured by carbon traps; and

(3) Hot soak losses, which result when the vehicle is parked and the hot engine is turned off, measured by the enclosure technique.

(e) Except in cases of component malfunction or failure, all emission control systems installed on or incorporated in a new motor vehicle shall be functioning during all procedures in this subpart. Maintenance to correct component malfunction or failure shall be authorized in accordance with § 86.090–25.

(f) Background concentrations are measured for all species for which emissions measurements are made. For exhaust testing, this requires sampling and analysis of the dilution air. For evaporative testing, this requires measuring initial concentrations.

(When testing methanol-fueled vehicles, manufacturers may choose not to measure background concentrations of methanol and/or formaldehyde, and then assume that the concentrations are zero during calculations.)

[56 FR 25774, June 5, 1991, as amended at 60 FR 34347, June 30, 1995]

§86.127–96 Test procedures; overview.

The procedures described in this and subsequent sections are used to determine the conformity of vehicles with the standards set forth in subpart A of this part for light-duty vehicles and light-duty trucks.

(a) The overall test consists of prescribed sequences of fueling, parking, and operating conditions. Vehicles are tested for any or all of the following emissions:

(1) Gaseous exhaust THC, CO, NO_X, CO_2 (for petroleum-fueled and gaseous-fueled vehicles), plus CH_3OH and HCHO for methanol-fueled vehicles, plus CH_4 (for vehicles subject to the NMHC and NMHCE standards).

(2) Particulates.

(3) Evaporative HC (for gasoline-fueled, methanol-fueled and gaseous-fueled vehicles) and CH_3OH (for methanol-fueled vehicles). The evaporative testing portion of the procedure occurs after the exhaust emission test; however, exhaust emissions need not be sampled to complete a test for evaporative emissions.

(4) Fuel spitback (this test is not required for gaseous-fueled vehicles).

(b) The Otto-cycle exhaust emission test is designed to determine gaseous THC, CO, CO_2, CH_4, NO_X, and particulate mass emissions from gasoline-fueled, methanol-fueled and gaseous-fueled Otto-cycle vehicles as well as methanol and formaldehyde from methanol-fueled Otto-cycle vehicles, while simulating an average trip in an urban area of 11 miles (18 kilometers). The test consists of engine start-ups and vehicle operation on a chassis dynamometer through a specified driving schedule. A proportional part of the diluted exhaust is collected continuously for subsequent analysis, using a constant volume (variable dilution) sampler or critical flow venturi sampler.

(c) The diesel-cycle exhaust emission test is designed to determine particulate and gaseous mass emissions during a test similar to the test in §86.127(b). For petroleum-fueled diesel-cycle vehicles, diluted exhaust is continuously analyzed for THC using a heated sample line and analyzer; the other gaseous emissions (CH_4, CO, CO_2, and NO_X) are collected continuously for analysis as in §86.127(b). For methanol-fueled vehicles, THC, methanol, formaldehyde, CO, CO_2, CH_4, and NO_X are collected continuously for analysis as in §86.127(b). THC, methanol, and formaldehyde are collected using heated sample lines, and a heated FID is used for THC analyses. Simultaneous with the gaseous exhaust collection and analysis, particulates from a proportional part of the diluted exhaust are collected continuously on a filter. The mass of particulate is determined by the procedure described in §86.139. This testing requires a dilution tunnel as well as the constant volume sampler.

(d) The evaporative emission test (gasoline-fueled vehicles, methanol-fueled and gaseous-fueled vehicles) is designed to determine hydrocarbon and methanol evaporative emissions as a consequence of diurnal temperature fluctuation, urban driving and hot soaks following drives. It is associated with a series of events that a vehicle may experience and that may result in hydrocarbon and/or methanol vapor losses. The test procedure is designed to measure:

(1) Diurnal emissions resulting from daily temperature changes (as well as relatively constant resting losses), measured by the enclosure technique (see §86.133);

(2) Running losses resulting from a simulated trip performed on a chassis dynamometer, measured by the enclosure or point-source technique (see §86.134; this test is not required for gaseous-fueled vehicles); and

(3) Hot soak emissions, which result when the vehicle is parked and the hot engine is turned off, measured by the enclosure technique (see §86.138).

(e) Fuel spitback emissions occur when a vehicle's fuel fill neck cannot accommodate dispensing rates. The vehicle test for spitback consists of a short drive followed immediately by a complete refueling event. This test is

not required for gaseous-fueled vehicles.

(f) Except in cases of component malfunction or failure, all emission control systems installed on or incorporated in a new motor vehicle shall be functioning during all procedures in this subpart. Maintenance to correct component malfunction or failure shall be authorized in accordance with § 86.090–25.

(g) Background concentrations are measured for all species for which emissions measurements are made. For exhaust testing, this requires sampling and analysis of the dilution air. For evaporative testing, this requires measuring initial concentrations. (When testing methanol-fueled vehicles, manufacturers may choose not to measure background concentrations of methanol and/or formaldehyde, and then assume that the concentrations are zero during calculations.)

[58 FR 16032, Mar. 24, 1993, as amended at 59 FR 48508, Sept. 21, 1994; 60 FR 34347, June 30, 1995]

§ 86.128–00 Transmissions.

Section 86.128–00 includes text that specifies requirements that differ from § 86.128–79. Where a paragraph in § 86.128–79 is identical and applicable to § 86.128–00, this may be indicated by specifying the corresponding paragraph and the statement ''[Reserved]. For guidance see § 86.128–79.''

(a) through (c) [Reserved]. For guidance see § 86.128–79.

(d) The vehicle shall be driven with appropriate accelerator pedal movement necessary to achieve the speed versus time relationship prescribed by the driving schedule. Both smoothing of speed variations and excessive accelerator pedal perturbations are to be avoided.

(e) through (h) [Reserved]. For guidance see § 86.128–79.

[61 FR 54892, Oct. 22, 1996]

§ 86.128–79 Transmissions.

(a) All test conditions, except as noted, shall be run according to the manufacturer's recommendations to the ultimate purchaser, *Provided*, That: Such recommendations are representative of what may reasonably be expected to be followed by the ultimate purchaser under in-use conditions.

(b) Vehicles equipped with free wheeling or overdrive, except as noted, shall be tested with these features operated according to the manufacturer's recommendations to the ultimate purchaser.

(c) Idle modes less than one minute in length shall be run with automatic transmissions in ''Drive'' and the wheels braked; manual transmissions shall be in gear with the clutch disengaged, except for the first idle mode (see §§ 86.134, 86.136, and 86.137). The first idle mode and idle modes longer than one minute in length may be run with automatic transmissions in ''Neutral;'' manual transmissions may be in ''Neutral'' with the clutch engaged (clutch may be disengaged for engine start-up). If an automatic transmission is in ''Neutral'' during an idle mode, it shall be placed in ''Drive'' with the wheels braked at least 5 seconds before the end of the idle mode. If a manual transmission is in ''Neutral'' during an idle mode, it shall be placed in gear with the clutch disengaged at least 5 seconds before the end of the idle mode.

(d) The vehicle shall be driven with minimum accelerator pedal movement to maintain the desired speed.

(e) Accelerations shall be driven smoothly following representative shift speeds and procedures. For manual transmissions, the operator shall release the accelerator pedal during each shift and accomplish the shift with minimum time. If the vehicle cannot accelerate at the specified rate, the vehicle shall be operated at maximum available power until the vehicle speed reaches the value prescribed for that time in the driving schedule.

(f) The deceleration modes shall be run in gear using brakes or accelerator pedal as necessary to maintain the desired speed. Manual transmission vehicles shall have the clutch engaged and shall not change gears from the previous mode. For those modes which decelerate to zero, manual transmission clutches shall be depressed when the speed drops below 15 mph (24.1 km/h), when engine roughness is evident, or when engine stalling is imminent.

(g)(1) In the case of test vehicles equipped with manual transmissions, the transmission shall be shifted in accordance with procedures which are representative of shift patterns that may reasonably be expected to be followed by vehicles in use, in terms of such variables as vehicle speed or percent rated engine speed. At the Administrator's discretion, a test vehicle may also be shifted according to the shift procedures recommended by the manufacturer to the ultimate purchaser, if such procedures differ from those which are reasonably expected to be followed by vehicles in use.

(2) A manufacturer may recommend to the ultimate purchaser shift procedures other than those used in testing by the EPA, Provided that: All shift procedures (including multiple shift speeds) which the manufacturer proposes to supply to the ultimate purchaser are provided to the Administrator as part of the manufacturer's application for certification, or as an amendment to such application, under §86.079–32, §86.079–33, or §86.079–34.

(h) Downshifting is allowed at the beginning of or during a power mode in accordance with the shift procedure determined in paragraph (g)(1) of this section.

[43 FR 52921, Nov. 14, 1978, as amended at 58 FR 16033, Mar. 24, 1993]

§86.129–00 Road load power, test weight, and inertia weight class determination.

Applicability. Section 86.129–94 (a) applies to all vehicle testing. Section 86.129–80 (b) and (c) are applicable to vehicles from engine families which are not required to meet SFTP requirements, although a manufacturer may elect to use the requirements in paragraphs (e) and (f) of this section instead of §86.129–80 (b) and (c) on any vehicle. Section 86.129–94(d) which discusses fuel temperature profile, is applicable to evaporative emission running loss testing. Paragraphs (e) and (f) of this section are applicable to vehicles from engine families required to comply with SFTP requirements. Section 86.129–00 includes text that specifies requirements that differ from §86.129–80 or §86.129–94. Where a paragraph in §86.129–80 or §86.129–94 is identical and applicable to §86.129–00, this may be indicated by specifying the corresponding paragraph and the statement ''[Reserved]. For guidance see §86.129–80.'' or ''[Reserved]. For guidance see §86.129–94.''

(a) [Reserved]. For guidance see §86.129–94.

(b) through (c) [Reserved]. For guidance see §86.129–80.

(d) [Reserved]. For guidance see §86.129–94.

(e)(1) For each test vehicle from an engine family required to comply with SFTP requirements, the manufacturer shall supply representative road load forces for the vehicle at speeds between 15 km/hr (9.3 mph) and 115 km/hr (71.5 mph). The road load force shall represent vehicle operation on a smooth level road, during calm winds, with no precipitation, at an ambient temperature of 20 °C (68 °F), and atmospheric pressure of 98.21 kPa. Road load force for low speed may be extrapolated. Manufacturers may, at their option, use road load forces meeting the objectives of paragraph (f) of this section for any vehicle.

(2) The dynamometer's power absorption shall be set for each vehicle's emission test sequence such that the force imposed during dynamometer operation matches actual road load force at all speeds.

(3) The 10 percent adjustment in road load power for air conditioning discussed in §86.129–80(b)(3), is not applicable when road load forces are determined for dynamometer testing using paragraphs (e)(1) and (e)(2) of this section.

(f)(1) Required test dynamometer inertia weight class selections for the test elements of FTP, US06, and SC03 are determined by the test vehicles test weight basis and corresponding equivalent weight as listed in the tabular information of §86.129–94(a). With the exception of the fuel economy test weight information in footnote 4 to the table in §86.129–94(a), none of the other footnotes to the tabular listing apply to emission tests utilizing an approved single roll dynamometer or equivalent dynamometer configuration. All light-duty vehicles and light light-duty trucks are to be tested at the inertia

weight class corresponding to their equivalent test weight.

(i) For light-duty vehicles and light light-duty trucks, test weight basis is loaded vehicle weight, which is the vehicle weight plus 300 pounds.

(ii) For heavy light-duty trucks, the definition of test weight basis varies depending on the SFTP test element being tested.

(A) For the aggressive driving cycle (US06), the test weight basis is the vehicle curb weight plus 300 pounds.

(B) For the FTP and the air conditioning (SC03) element of the SFTP, the test weight is the average of the curb weight plus GVWR.

(2) Dynamic inertia load adjustments may be made to the test inertia weight during specific US06 acceleration events when wide open throttle operation is equal to or greater than eight (8) seconds (see § 86.108–00). The dynamic inertia weight adjustment procedure must be approved in advance of conducting official US06 testing. The Administrator will perform confirmatory US06 testing using the same dynamometer inertia adjustment procedures as the manufacturer if:

(i) The manufacturer submits a request to the Administrator; and

(ii) The manufacturer provides the dynamometer hardware and/or software necessary for these adjustments to the Administrator.

[61 FR 54892, Oct. 22, 1996]

EFFECTIVE DATE NOTE: At 61 FR 54892, Oct. 22, 1996, § 86.129–00 was added. This section contains information collection and recordkeeping requirements and will not become effective until approval has been given by the Office of Management and Budget.

§ 86.129–80 Road load power, test weight, and inertia weight class determination.

(a) Flywheels, electrical or other means of simulating test weight as shown in the following table shall be used. If the equivalent test weight specified is not available on the dynamometer being used, the next higher equivalent test weight (not to exceed 250 pounds) available shall be used.

Road load power at 50 mi/h—light-duty trucks [1 2 3]	Loaded vehicle weight (pounds)	Equivalent test weight (pounds)	Inertia weight class (pounds)
.....	Up to 1,062	1,000	1,000
.....	1,063 to 1,187 ...	1,125	1,000
.....	1,188 to 1,312 ...	1,250	1,250
.....	1,313 to 1,437 ...	1,375	1,250
.....	1,438 to 1,562 ...	1,500	1,500
.....	1,563 to 1,687 ...	1,625	1,500
.....	1,688 to 1,812 ...	1,750	1,750
.....	1,813 to 1,937 ...	1,875	1,750
.....	1,938 to 2,062 ...	2,000	2,000
.....	2,063 to 2,187 ...	2,125	2,000
.....	2,188 to 2,312 ...	2,250	2,250
.....	2,313 to 2,437 ...	2,375	2,250
.....	2,438 to 2,562 ...	2,500	2,500
.....	2,563 to 2,687 ...	2,625	2,500
.....	2,688 to 2,812 ...	2,750	2,750
.....	2,813 to 2,937 ...	2,875	2,750
.....	2,938 to 3,062 ...	3,000	3,000
.....	3,063 to 3,187 ...	3,125	3,000
.....	3,188 to 3,312 ...	3,250	3,000
.....	3,313 to 3,437 ...	3,375	3,500
.....	3,438 to 3,562 ...	3,500	3,500
.....	3,563 to 3,687 ...	3,625	3,500
.....	3,688 to 3,812 ...	3,750	3,500
.....	3,813 to 3,937 ...	3,875	4,000
.....	3,938 to 4,125 ...	4,000	4,000
.....	4,126 to 4,375 ...	4,250	4,000
.....	4,376 to 4,625 ...	4,500	4,500
.....	4,626 to 4,875 ...	4,750	4,500
.....	4,876 to 5,125 ...	5,000	5,000
.....	5,126 to 5,375 ...	5,250	5,000
.....	5,376 to 5,750 ...	5,500	5,500
.....	5,751 to 6,250 ...	[4] 6,000	6,000
.....	6,251 to 6,750 ...	6,500	6,500
.....	6,751 to 7,250 ...	7,000	7,000
.....	7,251 to 7,750 ...	7,500	7,500
.....	7,751 to 8,250 ...	8,000	8,000
.....	8,251 to 8,750 ...	8,500	8,500
.....	8,751 to 9,250 ...	9,000	9,000
.....	9,251 to 9,750 ...	9,500	9,500
.....	9,751 to 10,000	10,000	10,000

[1] For all light-duty trucks except vans, and for heavy duty vehicles optionally certified as light-duty trucks, the road load power (horsepower) at 50 mi/h shall be 0.58 times B (defined below) rounded to the nearest ½ hp.

[2] For vans, the road load power at 50 mi/h (horsepower) shall be 0.50 times B (defined below) rounded to the nearest ½ hp.

[3] B is the basic vehicle frontal area (square foot) plus the additional frontal area (square foot) of mirrors and optional equipment exceeding 0.1 ft^2 which are anticipated to be sold on more than 33 pct of the car line. Frontal area measurements shall be computed to the nearest 10th of a square foot using a method approved in advanced by the administrator.

[4] Light-duty vehicles over 5,750 lb loaded vehicle weight shall be tested at a 5,500 lb equivalent test weight.

(b) *Power absorption unit adjustment—light-duty trucks.* (1) The power absorption unit shall be adjusted to reproduce road load power at 50 mph true speed. The indicated road load power setting shall take into account the dynamometer friction. The relationship between road load (absorbed) power and indicated road load power for a particular dynamometer shall be determined by the procedure outlined in § 86.118 or other suitable means.

(2) The road load power listed in the table above shall be used or the vehicle

manufacturer may determine the road load power by an alternate procedure requested by the manufacturer and approved in advance by the Administrator.

(3) Where it is expected that more than 33 percent of a car line within an engine-system combination will be equipped with air conditioning per § 86.080–24(g)(2), the road load power listed above or as determined in paragraph (b)(2) of this section shall be increased by 10 percent, up to a maximum increase of 1.4 horsepower, for testing all test vehicies representing that car line within that engine-system combination if those vehicles are intended to be offered with air conditioning in production. The above increase for air conditioning shall be added prior to rounding off as instructed by notes 2 and 3 of the table.

(c) *Power absorption unit adjustment—light-duty vehicles.* (1) The power absorption unit shall be adjusted to reproduce road load power at 50 mph true speed. The dynamometer power absorption shall take into account the dynamometer friction, as discussed in § 86.118.

(2) The dynamometer road load setting is determined from the equivalent test weight, the reference frontal area, the body shape, the vehicle protuberances, and the tire type by the following equations.

(i) For light-duty vehicles to be tested on a twin roll dynamometer.

$$Hp = aA + P + tW$$

where:

Hp = the dynamometer power absorber setting at 50 mph (horsepower).

A = the vehicle reference frontal area (ft^2). The vehicle reference frontal area is defined as the area of the orthogonal projection of the vehicle; including tires and suspension components, but excluding vehicle protuberances, onto a plane perpendicular to both the longitudinal plane of the vehicle and the surface upon which the vehicle is positioned. Measurements of this area shall be computed to the nearest tenth of a square foot using a method approved in advance by the Administrator.

P = the protuberance power correction factor from table 1 of this paragraph (horsepower).

W = vehicle equivalent test weight (lbs) from the table in paragraph (a).

a = 0.43 for fastback-shaped vehicles; = 0.50 for all other light duty vehicles.

t = 0.0 for vehicles equipped with radial ply tires; = 3×10^{-4} for all other vehicles.

A vehicle is considered to have a fastback shape if the rearward projection of that portion of the rear surface (A_b) which slopes at an angle of less than 20 degrees from the horizontal is at least 25 percent as large as the vehicle reference frontal area. In addition, this surface must be smooth, continuous, and free from any local transitions greater than four degrees. An example of a fastback shape is presented in Figure 1.

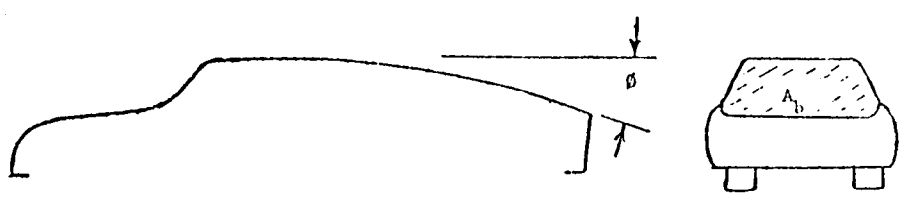

Figure 1 $\phi < 20°$, $A_b > 0.25\ A$

TABLE I—PROTUBERANCE POWER, P. VERSUS TOTAL PROTUBERANCE FRONTAL AREA, A_p

A_p (square foot)	P (horsepower)
A_p<0.30	0.0
0.30 A_p<0.60	.40
0.60 A_p<0.90	.70

TABLE I—PROTUBERANCE POWER, P. VERSUS TOTAL PROTUBERANCE FRONTAL AREA, A_p—Continued

A_p (square foot)	P (horsepower)
0.90 A_p<1.20	1.00
1.20 A_p<1.50	1.30

TABLE I—PROTUBERANCE POWER, P. VERSUS TOTAL PROTUBERANCE FRONTAL AREA, A_p—Continued

A_p (square foot)	P (horsepower)
1.50 A_p<1.80	1.60
1.80 A_p<2.10	1.90
2.10 A_p<2.40	2.20
2.40 A_p<2.70	2.50
2.70 A_p<3.00	2.80
3.00 A_p	3.10

The protuberance frontal area, A_p, is defined in a manner analogous to the definition of the vehicle reference frontal area, i.e., the total area of the orthogonal projections of the vehicle mirrors, hood ornaments, roof racks, and other protuberance onto a plane(s) perpendicular to both the longitudinal plane of the vehicle and the surface upon which the vehicle is positioned. A protuberance is defined as any fixture attached to the vehicle protruding more than 1 inch from the vehicle surface and having a projected area greater than 0.01 ft^2 with the area calculated by a method approved in advance by the Administrator. Included in the total protuberance frontal area shall be all fixtures which occur as standard equipment. The area of any optional equipment shall also be included if it is expected that more than 33 percent of the car line sold will be equipped with this option.

(ii) The dynamometer power absorber setting for light-duty vehicles shall be rounded to the nearest 0.1 horsepower.

(iii) For light-duty vehicles to be tested on a single, large roll dynamometer.

$$Hp = aA + P + (5.0 \times 10^{-4} + 0.33t)W$$

All symbols in the above equation are defined in paragraph (c)(2)(i) of this section. The rounding criteria of paragraph (c)(2)(i) also apply to this paragraph.

(3) The road load power calculated above shall be used or the vehicle manufacturer may determine the road load power by an alternate procedure requested by the manufacturer and approved in advance by the Administrator.

(4) Where it is expected that more than 33 percent of a car line within an engine-system combination will be equipped with air conditioning, per § 86.080–24(g)(2), the road load power as determined in paragraph (c) (2) or (3) of this section shall be increased by 10 percent up to a maximum increment of 1.4 horsepower, for testing all test vehicles of that car line within that engine-system combination if those vehicles are intended to be offered with air conditioning in production. This power increment shall be added to the indicated dynamometer power absorption setting prior to rounding off this value.

[42 FR 45653, Sept. 12, 1977, as amended at 43 FR 52921, Nov. 14, 1978]

§ 86.129–94 Road load power, test weight, inertia weight class determination, and fuel temperature profile.

Section 86.129–94 includes text that specifies requirements that differ from § 86.129–80. Where a paragraph in § 86.129–80 is identical and applicable to § 86.129–94, this may be indicated by specifying the corresponding paragraph and the statement ''[Reserved]. For guidance see § 86.129–80.'' Where a corresponding paragraph of § 86.129–80 is not applicable, this is indicated by the statement ''[Reserved].''

(a) Flywheels, electrical, or other means of simulating test weight as shown in the following table shall be used. If the equivalent test weight specified is not available on the dynamometer being used, the next higher equivalent test weight (not to exceed 250 pounds) available shall be used.

Road load power at 50 mi/hour light-duty trucks[1,2,3]	Test weight basis[4,5]	Equivalent test weight (pounds)	Inertia weight class (pounds)
	Up to 1,062	1,000	1,000
	1,063 to 1,187	1,125	1,000
	1,188 to 1,312	1,250	1,250
	1,313 to 1,437	1,375	1,250
	1,438 to 1,562	1,500	1,500
	1,563 to 1,687	1,625	1,500
	1,688 to 1,812	1,750	1,750
	1,813 to 1,937	1,875	1,750
	1,938 to 2,062	2,000	2,000
	2,063 to 2,187	2,125	2,000
	2,188 to 2,312	2,250	2,250
	2,313 to 2,437	2,375	2,250
	2,438 to 2,562	2,500	2,500
	2,563 to 2,687	2,625	2,500
	2,688 to 2,812	2,750	2,750
	2,813 to 2,937	2,875	2,750
	2,938 to 3,062	3,000	3,000
	3,063 to 3,187	3,125	3,000
	3,188 to 3,312	3,250	3,000
	3,313 to 3,437	3,375	3,500
	3,438 to 3,562	3,500	3,500
	3,563 to 3,687	3,625	3,500
	3,688 to 3,812	3,750	3,500
	3,813 to 3,937	3,875	4,000
	3,938 to 4,125	4,000	4,000
	4,126 to 4,375	4,250	4,000
	4,376 to 4,625	4,500	4,500
	4,626 to 4,875	4,750	4,500

Road load power at 50 mi/hour light-duty trucks[1,2,3]	Test weight basis[4,5]	Equivalent test weight (pounds)	Inertia weight class (pounds)
.....	4,876 to 5,125	5,000	5,000
.....	5,126 to 5,375	5,250	5,000
.....	5,376 to 5,750	5,500	5,500
.....	5,751 to 6,250	6,000	6,000
.....	6,251 to 6,750	6,500	6,500
.....	6,751 to 7,250	7,000	7,000
.....	7,251 to 7,750	7,500	7,500
.....	7,751 to 8,250	8,000	8,000
.....	8,251 to 8,750	8,500	8,500
.....	8,751 to 9,250	9,000	9,000
.....	9,251 to 9,750	9,500	9,500
.....	9,751 to 10,000 ...	10,000	10,000

[1] For all light-duty trucks except vans, and for heavy duty vehicles optionally certified as light-duty trucks, the road load power (horsepower) at 50 mi/h shall be 0.58 times B (defined below) rounded to the nearest 1/2 hp.

[2] For vans, the road load power at 50 mi/h (horsepower) shall be 0.50 times B (defined below) rounded to the nearest 1/2 hp.

[3] B is the basic vehicle frontal area (square foot) plus the additional frontal area (square foot) of mirrors and optional equipment exceeding 0.1 ft^2 which are anticipated to be sold on more than 33 pct. of the car line. Frontal area measurements shall be computed to the nearest 10th of a square foot using a method approved in advanced by the administrator.

[4] For model year 1994 and later heavy light-duty trucks not subject to the Tier O standards of § 86.094–9 of subpart A, test weight basis is as follows: for emissions tests, the basis shall be adjusted loaded vehicle weight, as defined in § 86,094–2 of subpart A; and for fuel economy tests, the basis shall be loaded vehicle weight, as defined in § 86.082–2 of subpart A, or, at the manufacturer's option, adjused loaded vehicle weight as defined in § 86.094–2 of subpart A. For all other vehicles, test weight basis shall be loaded vehicle weight, as defined in § 86.082–2 of subpart as defined in § 86.094–2 of subpart A. For all other vehicles, test weight shall be loaded vehicle weight, as defined in § 86.082–2 of subpart A.

[5] Light-duty vehicles over 5,750 lb. loaded vehicle weight shall be tested at a 5,500 lb. equivalent test weight.

(b) through (c) [Reserved]. For guidance see § 86.129–80.

(d) *Fuel temperature profile*—(1) *General requirements.* (i) To be tested for running losses, as specified in § 86.134, a vehicle must have a fuel temperature profile. The following procedure is used to generate the fuel temperature profile, which serves as a target for controlling fuel temperatures during the running loss test. This profile represents the fuel temperature change that occurs during on-road driving. If a vehicle has more than one fuel tank, a profile shall be established for each tank. Manufacturers may also simultaneously generate a profile for vapor temperatures.

(ii) If a manufacturer uses a vehicle model to develop a profile to represent multiple models, the vehicle model selected must have the greatest expected fuel temperature increase during driving of all those models it represents. Also, manufacturers must select test vehicles with any available vehicle options that increase fuel temperatures during driving (for example, any feature that limits underbody airflow).

(iii) Manufacturers may conduct testing to develop fuel temperature profiles in a laboratory setting, subject to approval by the Administrator. The laboratory facility should simulate outdoor testing to reproduce fuel and vapor temperature behavior over the specified driving schedule. The design of the laboratory facility should include consideration of any parameters that may affect fuel temperatures, such as solar loading, pavement heat, and relative wind velocities around and underneath the test vehicle. Indoor testing to develop the fuel temperature profiles must be conducted with little or no vehicle-specific adjustment of laboratory parameters. Manufacturers would need to maintain an ongoing demonstration of correlation between laboratory and outdoor measurement of fuel temperatures. Specifically, fuel temperatures and pressures from indoor driving should be at least as high as measured when driving outdoors according to the procedures described in this section.

(iv) Small-volume manufacturers, as defined in § 86.094–14(b)(1), may use an alternate method for generating fuel temperature profiles, subject to the approval of the Administrator.

(v) The Administrator may conduct testing to establish any vehicle's temperature profiles or to verify compliance with fuel tank pressure requirements.

(2) *Vehicle instrumentation.* (i) The vehicle must be equipped with temperature sensors and pressure transducers, as described in § 86.107–96 (e) and (f), and a driver's aid, which shall be configured to provide the test driver with the desired vehicle speed vs. time trace and the actual vehicle speed.

(ii) A computer, data logger, or strip chart data recorder shall record the following parameters at a minimum during the test run:

(A) Desired speed;

(B) Actual speed;

(C) Instantaneous average liquid fuel temperature (T_{liq}); and

(D) Vapor space pressure (the Administrator may omit measurement of fuel tank pressure).

(iii) The data recording system described in paragraph (d)(2)(ii) of this section shall be capable of resolving time to ±1 s, capable of resolving temperature to ±2 °F, capable of resolving pressure to ±1.0 inch of water, and capable of resolving speed to ±1 mph. The temperature and pressure signals shall be recorded at intervals of up to 1 minute; speed signals shall be recorded at intervals of up to 1 second.

(3) *Ambient conditions.* The procedure shall be run under the following ambient conditions. Conditions should be representative of sunny summer days.

(i) Starting ambient temperature ($T_{amb,o}$) shall be at least 95 °F, steady or increasing (no more than 2 °F drop) during the procedure. Ambient temperature shall be measured and recorded in regular intervals of at least once every 5 minutes. Measure ambient temperature with the following requirements (based on *Federal Standard for Siting Meteorological Sensors at Airports,* FCM–S4–1987). The sensors shall be mounted 5±1 feet (1.5±0.3 meters) above ground level. The sensors shall be protected from radiation from the sun, sky, earth, and any other surrounding objects, but at the same time be adequately ventilated. The sensors shall be installed in such a position as to ensure that measurements are representative of the free air circulation in the locality and not influenced by artificial conditions such as large buildings, cooling towers, and expanses of concrete and tarmac. Keep any grass and vegetation within 100 feet (30 meters) of the sensor clipped to a height of about 10 inches (25 centimeters) or less.

(ii) Wind conditions shall be calm to light with maximum wind speed of 15 mph. In the case of temporary gusting, wind speeds between 15 and 25 mph may occur for up to 5 percent of the total driving time without invalidating the data collection. Wind speed shall be measured and recorded in regular intervals of at least once per minute. Measure wind speed with the following requirements (based on *Federal Standard for Siting Meteorological Sensors at Airports,* FCM–S4–1987). The site should be relatively level, but small gradual slopes are acceptable. The sensor shall be mounted 30 to 33 feet (9 to 10 meters) above the average ground height within a radius of 500 feet (150 meters). The sensor height shall not exceed 33 feet, except as necessary to be at least 15 feet (5 meters) above the height of any obstruction (e.g. vegetation, buildings, etc.) within a 500 foot (150 meter) radius. An object is considered to be an obstruction if the included lateral angle from the sensor to the ends of the object is 10 degrees or more.

(iii) Road surface temperature shall be at least 125 °F throughout the driving period. Pavement temperature shall be measured and recorded in regular intervals of at least once per minute. The track temperature may be measured with an embedded sensor, a portable temperature probe, or an infrared pyrometer that can provide an accuracy of ±2 °F. Temperatures must be measured on a surface representative of the surface where the vehicle is driven.

(iv) Conditions shall be sunny or mostly sunny with a maximum cloud cover of 25 percent.

(v) Reported cloud cover, wind speed, and ambient temperature should be consistent with that reported by the nearest weather station; the Administrator may request justification of any discrepancy.

(4) *Profile determination procedure.* (i) Drain the fuel tank(s) and fill with test fuel to the ''tank fuel volume'' defined in § 86.082–2. The test fuel should meet the specifications of § 86.113, except that fuel with a lower volatility may be used, subject to Administrator approval. Manufacturers using a lower volatility fuel must generate a vapor temperature profile for demonstrating compliance with the limit on fuel tank pressure during the running loss test (see § 86.134–96).

(ii) The vehicle shall be moved to the location where the data is to be collected. It may be driven a maximum distance of 5 miles and may also be transported by other means. The vehicle shall be stabilized by one of the following methods:

(A) The vehicle shall be parked for a minimum of 12 hours in an open area on a surface that is representative of the test road, without any artificial

heating or cooling of the fuel. The orientation of the front of the vehicle during parking (e.g., N, SW, etc.) shall be documented.

(B) The vehicle may be soaked in a temperature-controlled environment to stabilize fuel temperatures. Before starting the drive, the vehicle shall be stabilized with fuel temperatures 95 ±3 °F for at least one hour. The fuel temperature may not exceed 98 °F at any time before the beginning of the driving schedule, during which only whole-vehicle heating and cooling may be used to control fuel temperatures. If a manufacturer uses the provisions of paragraph (d)(7)(v) of this section to establish a lower initial fuel temperature for the running loss test, the fuel in the test vehicle may not be stabilized at a temperature higher than the newly established initial fuel temperature.

(iii) Once the ambient conditions specified in paragraph (d)(3) of this section are met and the vehicle has been stabilized according to paragraph (d)(4)(ii) of this section, the vehicle's engine may be started. The vehicle's air conditioning system (if so equipped) shall be set to the ''normal'' air conditioning mode and adjusted to the minimum discharge air temperature and high fan speed. Vehicles equipped with automatic temperature controlled air conditioning systems shall be set to operate in ''automatic'' temperature and fan modes with the system set at 72 °F.

(iv) The vehicle may be operated at minimum throttle for a period up to 60 seconds prior to the start of the driving schedule, as necessary to move from the parking location onto the road surface. The driver's aid shall be started and the vehicle operated over the driving cycle specified in § 86.134–96(b) with the transmission operated in the same manner as specified in § 86.128–79. The data recording system shall provide a record of the required parameters over the entire period of driving.

(5) *Records required.* In addition to the vehicle data recording, the following parameters shall be documented for the determination of the fuel temperature profile:

(i) Date and time of vehicle fueling;

(ii) Odometer reading at vehicle fueling;

(iii) Date and time vehicle was parked, parking location and orientation;

(iv) Odometer reading at parking;

(v) Date and time engine was started;

(vi) Time of initiation of first UDDS;

(vii) Time of completion of the driving cycle;

(viii) Ambient temperatures throughout the period of driving (T_{amb});

(ix) Wind speed throughout the period of driving;

(x) Track surface temperatures throughout the period of driving cycle (T_{sur});

(xi) Percent cloud cover during the period of driving; and

(xii) Ambient temperature, wind speed, and percent cloud cover reported by the nearest weather station for the time corresponding most closely to the period of driving.

(6) *Fuel tank pressure.* Tank pressure shall not exceed 10 inches of water at any time during the temperature profile determination unless a pressurized system is used and the manufacturer demonstrates that vapor would not be vented to the atmosphere upon fuel cap removal.

(7) *Calculation of temperature profiles.* (i) The traces from the driving schedule shall be verified to meet the speed tolerance requirements of § 86.115. The following conditions shall be verified:

(A) $T_{amb,i} \geq T_{amb,o} - 2$ °F.

Where,

(*1*) i=instantaneous measurement throughout the drive; and

(*2*) o=initial measurement at the start of the specified driving schedule.

(B) $T_{amb,o} \geq 95$ °F.

(C) $T_{sur,i} - T_{amb,i} \geq 30$ °F.

(D) $W_{max} \leq 15$ mph.

(ii) Failure to comply with any of these requirements shall result in invalidation of the data and require that the procedure be repeated, beginning with the fuel drain at paragraph (d)(4)(i) of this section.

(iii) If all these requirements are met, the following calculations shall be performed to determine a profile for liquid fuel temperatures and, if applicable, for vapor temperatures:

$T_{i,profile} = T_i - T_o$.

Where:

(A) $Ti_{,profile}$=the series of temperatures that comprise the relative temperature profile.

(B) T_i=the series of observed liquid fuel or vapor temperatures during the drive.

(C) T_o=the liquid fuel or vapor temperature observed at the start of the specified driving schedule.

(iv) The relative temperature profile consists of the set of temperatures at each 1-minute interval. If temperatures are sampled more frequently than once per minute, the temperature data points may represent a rolling average of temperatures sampled for up to one-minute intervals. If multiple valid test runs are conducted for any model, then all the collected data shall be used to calculate a composite profile, based on the average temperatures at each point. The absolute temperature profile is determined by adding 95 °F (35 °C) to each point of the relative profile. Other methodologies for developing corrected liquid fuel and vapor space temperature profiles may be used if demonstrated to yield equivalent results and approved in advance by the Administrator.

(v) Manufacturers may use a lower initial fuel temperature for the running loss test, if approved in advance by the Administrator. To demonstrate the need for such an adjustment, manufacturers would be expected to determine the maximum fuel temperature experienced by a vehicle during an extended park or after driving one UDDS cycle when exposed to the ambient conditions described in paragraph (d)(3) of this section. To use this provision, manufacturers would have to show maximum fuel temperatures no greater than 92 °F.

[56 FR 25775, June 5, 1991, as amended at 58 FR 16033, Mar. 24, 1993; 59 FR 39649, Aug. 3, 1994; 60 FR 43891, Aug. 23, 1995]

§ 86.130–00 Test sequence; general requirements.

Applicability. Section 86.130–96 (a) through (d) is applicable to vehicles tested for the FTP test. Paragraph (e) of this section is applicable to vehicles tested for the SFTP supplemental tests of air conditioning (SC03) and aggressive driving (US06). Paragraph (f) of this section is applicable to all emission testing. Section 86.130–00 includes text that specifies requirements that differ from § 86.130–96. Where a paragraph in § 86.130–96 is identical and applicable to § 86.130–00, this may be indicated by specifying the corresponding paragraph and the statement ''[Reserved]. For guidance see § 86.130–96.''

(a) through (d) [Reserved]. For guidance see § 86.130–96.

(e) The supplemental tests for exhaust emissions related to aggressive driving (US06) and air conditioning (SC03) use are conducted as stand-alone tests as described in §§ 86.158–00, 86.159–00, and 86.160–00. These tests may be performed in any sequence that maintains the appropriate preconditioning requirements for these tests as specified in § 86.132–00.

(f) If tests are invalidated after collection of emission data from previous test segments, the test may be repeated to collect only those data points needed to complete emission measurements. Compliance with emission standards may be determined by combining emission measurements from different test runs. If any emission measurements are repeated, the new measurements supersede previous values.

[61 FR 54893, Oct. 22, 1996]

§ 86.130–78 Test sequence; general requirements.

The test sequence shown in figure B78–10 shows the steps encountered as the test vehicle undergoes the procedures subsequently described to determine conformity with the standards set forth. Ambient temperature levels encountered by the test vehicle shall not be less than 68 °F (20 °C) nor more than 86 °F (30 °C). The temperatures monitored during testing must be representative of those experienced by the test vehicle. The vehicle shall be approximately level during all phases of the test sequence to prevent abnormal fuel distribution.

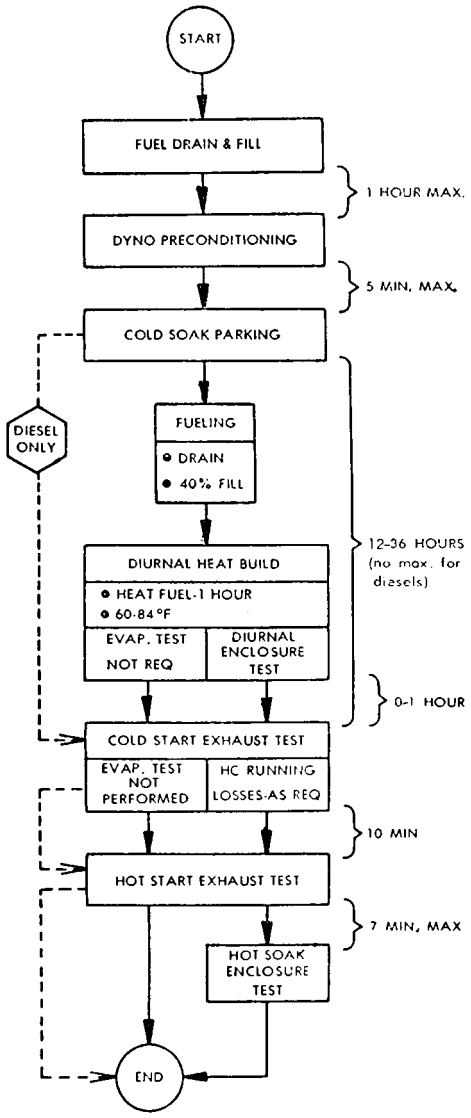

Figure B96-10 TEST SEQUENCE

§86.130–96 Test sequence; general requirements.

(a)(1) *Gasoline- and methanol-fueled vehicles.* The test sequence shown in figure B96–10 shows the steps encountered as the test vehicle undergoes the procedures subsequently described to determine conformity with the standards set forth. The full three- diurnal sequence depicted in figure B96–10 tests vehicles for all sources of evaporative emissions. The supplemental two-diurnal test sequence is designed to verify that vehicles sufficiently purge their evaporative canisters during the exhaust emission test. Sections 86.132–96,

86.133–96 and 86.138–96 describe the separate specifications of the supplemental two-diurnal test sequence.

(2) *Gaseous-fueled vehicles.* The test sequence shown in figure B96–10 shows the steps encountered as the test vehicle undergoes the procedures subsequently described to determine conformity with the standards set forth, with the exception that the fuel drain and fill and precondition canister steps are not required for gaseous-fueled vehicles. In addition, the supplemental two-diurnal test and the running loss test are not required.

(b) The vehicle test for fuel spitback during fuel dispensing is conducted as a stand-alone test (see § 86.146). This test is not required for gaseous-fueled vehicles.

(c) Ambient temperature levels encountered by the test vehicle shall be not less than 68 °F nor more than 86 °F, unless otherwise specified. If a different ambient temperature is specified for soaking the vehicle, the soak period may be interrupted once for up to 10 minutes to transport the vehicle from one soak area to another, provided the ambient temperature experienced by the vehicle is never below 68 °F. The temperatures monitored during testing must be representative of those experienced by the test vehicle.

(d) The vehicle shall be approximately level during all phases of the test sequence to prevent abnormal fuel distribution.

(e) If tests are invalidated after collection of emission data from previous test segments, the test may be repeated to collect only those data points needed to complete emission measurements. Compliance with emission standards may be determined by combining emission measurements from different test runs. If any emission measurements are repeated, the new measurements supersede previous values.

Federal Test Procedure

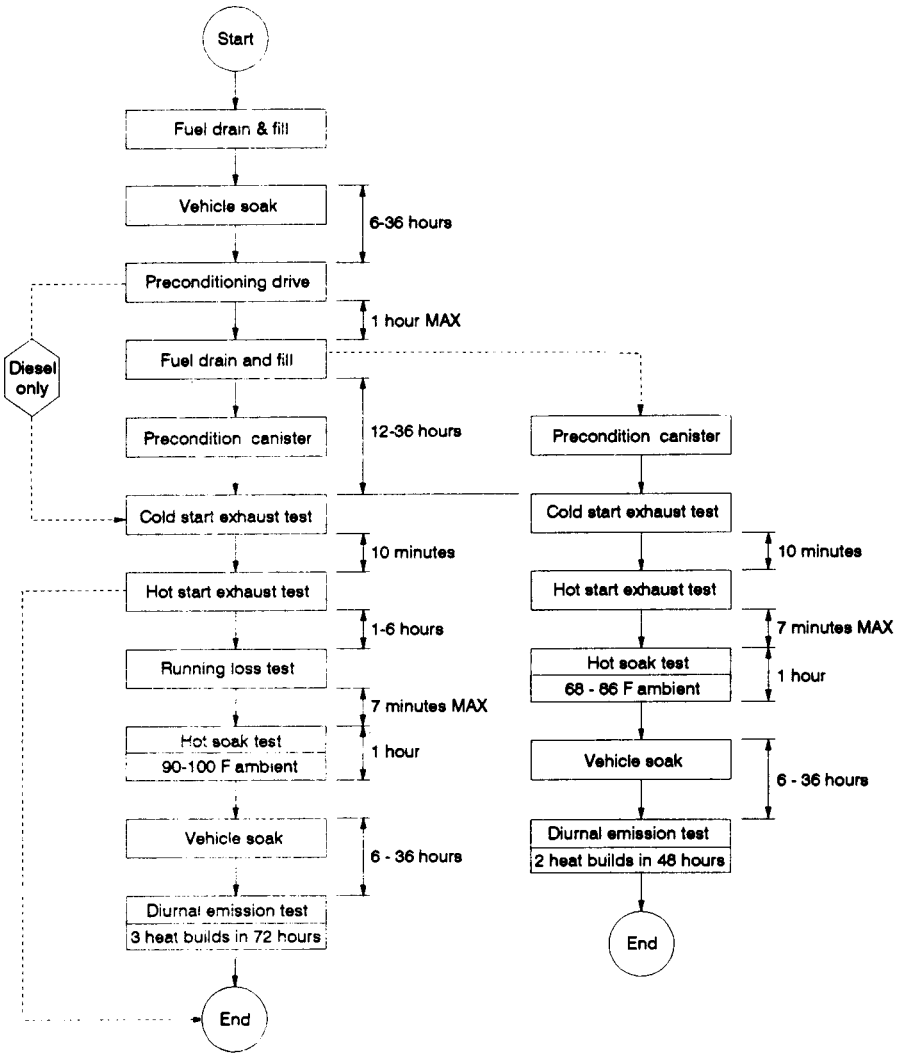

Figure B96-10 Test sequence

[58 FR 16034, Mar. 24, 1993, as amended at 59 FR 48509, Sept. 21, 1994; 60 FR 43893, Aug. 23, 1995]

§ 86.131–00 Vehicle preparation.

Section 86.131–00 includes text that specifies requirements that differ from § 86.131–96. Where a paragraph in § 86.131–96 is identical and applicable to § 86.131–00, this may be indicated by specifying the corresponding paragraph and the statement ''[Reserved]. For guidance see § 86.131–96.''

(a) through (e) [Reserved]. For guidance see § 86.131–96.

(f) For vehicles to be tested for aggressive driving emissions (US06), provide a throttle position sensing signal that is compatible with the test dynamometer. This signal provides the input information that controls dynamometer dynamic inertia weight adjustments (see §§ 86.108–00(b)(2)(ii) and 86.129–00(f)(2)). If a manufacturer chooses not to implement dynamic inertia adjustments for a portion or all of their product line, this requirement is not applicable.

[61 FR 54893, Oct. 22, 1996]

§ 86.131–90 Vehicle preparation.

(a) For gasoline-fueled and methanol-fueled vehicles prepare the fuel tank(s) for recording the temperature of the prescribed test fuel at the approximate mid-volume of the fuel.

(b) Provide additional fittings and adapters, as required, to accommodate a fuel drain at the lowest point possible in the tank(s) as installed on the vehicle.

[54 FR 14527, Apr. 11, 1989]

§ 86.131–96 Vehicle preparation.

(a) For gasoline- and methanol-fueled vehicles prepare the fuel tank(s) for recording the temperature of the prescribed test fuel, as described in § 86.107–96(e).

(b) Provide additional fittings and adapters, as required, to accommodate a fuel drain at the lowest point possible in the tank(s) as installed on the vehicle.

(c) For preconditioning that involves loading the evaporative emission canister(s) with butane, provide valving or other means as necessary to allow purging and loading of the canister(s).

(d) For vehicles to be tested for running loss emissions, prepare the fuel tank(s) for measuring and recording the temperature and pressure of the fuel tank as specified in § 86.107–96 (e) and (f). Measurement of vapor temperature is optional during the running loss test. If vapor temperature is not measured, fuel tank pressure need not be measured.

(e) For vehicles to be tested for running loss emissions, prepare the exhaust system by sealing or plugging all detectable sources of exhaust gas leaks. The exhaust system shall be tested or inspected to ensure that detectable exhaust hydrocarbons are not emitted into the running loss enclosure during the running loss test.

[58 FR 16037, Mar. 24, 1993, as amended at 60 FR 43895, Aug. 23, 1995]

§ 86.132–00 Vehicle preconditioning.

Applicability. Section 86.132–96 (a) through (c)(1) and (d) through (m) and paragraph (c)(2) of this section are applicable to FTP and evaporative emission testing. Paragraphs (n) and (o) of this section are applicable to vehicles tested for the SFTP supplemental tests of aggressive driving (US06) and air conditioning (SC03). Section 86.132–00 includes text that specifies requirements that differ from § 86.132–96. Where a paragraph in § 86.132–96 is identical and applicable to § 86.132–00, this may be indicated by specifying the corresponding paragraph and the statement ''[Reserved]. For guidance see § 86.132–96.''

(a) through (c)(1) [Reserved]. For guidance see § 86.132–96.

(c)(2)(i) Once a test vehicle has completed the refueling and vehicle soak steps specified in § 86.132–96 (b) and (c)(1), these steps may be omitted in subsequent testing with the same vehicle and the same fuel specifications, provided the vehicle remains under laboratory ambient temperature conditions for at least 6 hours before starting the next test. In such cases, each subsequent test shall begin with the preconditioning drive specified in § 86.132–96(c)(1). The test vehicle may not be used to set dynamometer horsepower.

(ii) The SFTP test elements of aggressive driving (US06) and air conditioning (SC03) can be run immediately or up to 72 hours after the official FTP

and/or evaporative test sequence without refueling provided the vehicle has remained under laboratory ambient temperature conditions. If the time interval exceeds 72 hours or the vehicle leaves the ambient temperature conditions of the laboratory, the manufacturer must repeat the refueling operation.

(d) through (m) [Reserved]. For guidance see §86.132–96.

(n) *Aggressive Driving Test (US06) Preconditioning.* (1) If the US06 test follows the exhaust emission FTP or evaporative testing, the refueling step may be deleted and the vehicle may be preconditioned using the fuel remaining in the tank (see paragraph (c)(2)(ii) of this section). The test vehicle may be pushed or driven onto the test dynamometer. Acceptable cycles for preconditioning are as follows:

(i) If the soak period since the last exhaust test element is less than or equal to two hours, preconditioning may consist of a 505, 866, highway, US06, or SC03 test cycles.

(ii) If the soak period since the last exhaust test element is greater than two hours, preconditioning consists of one full Urban Dynamometer Driving Cycle. Manufacturers, at their option, may elect to use the preconditioning in paragraph (n)(1)(i) of this section when the soak period exceeds two hours.

(iii) If a manufacturer has concerns about fuel effects on adaptive memory systems, a manufacturer may precondition a test vehicle on test fuel and the US06 cycle. Upon request from a manufacturer, the administrator will also perform the preconditioning with the US06 cycle.

(iv) The preconditioning cycles for the US06 test schedule are conducted at the same ambient test conditions as the certification US06 test.

(2) Following the preconditioning specified in paragraphs (n)(1)(i), (ii), and (iii) of this section, the test vehicle is returned to idle for one to two minutes before the start of the official US06 test cycle.

(o) *Air Conditioning Test (SC03) Preconditioning.* (1) If the SC03 test follows the exhaust emission FTP or evaporative testing, the refueling step may be deleted and the vehicle may be preconditioned using the fuel remaining in the tank (see paragraph (c)(2)(ii) of this section). The test vehicle may be pushed or driven onto the test dynamometer. Acceptable cycles for preconditioning are as follows:

(i) If the soak period since the last exhaust test element is less than or equal to two hours, preconditioning may consist of a 505, 866, or SC03 test cycles.

(ii) If the soak period since the last exhaust test element is greater than two hours, preconditioning consists of one full Urban Dynamometer Driving Cycle. Manufacturers, at their option, may elect to use the preconditioning in paragraph (o)(1)(i) of this section when the soak period exceeds two hours.

(2) Following the preconditioning specified in paragraphs (o)(1)(i) and (ii) of this section, the test vehicle is turned off, the vehicle cooling fan(s) is turned off, and the vehicle is allowed to soak for 10 minutes prior to the start of the official SC03 test cycle.

(3) The preconditioning cycles for the SC03 air conditioning test and the 10 minute soak are conducted at the same ambient test conditions as the SC03 certification air conditioning test.

[61 FR 54893, Oct. 22, 1996]

§86.132–90 Vehicle preconditioning.

(a) The vehicle shall be moved to the test area and the following operations performed:

(1) The fuel tank(s) shall be drained through the provided fuel tank(s) drain(s) and filled to the prescribed ''tank fuel volume'' with the specified test fuel, §86.113. For the above operations the evaporative emission control system shall neither be abnormally purged nor abnormally loaded.

(2) Within one hour of being fueled the vehicle shall be placed, either by being driven or pushed, on a dynamometer and operated through one Urban Dynamometer Driving Schedule test procedure, see §86.115 and appendix I. A test vehicle may not be used to set dynamometer horsepower.

(3) For those unusual circumstances where additional preconditioning is desired by the manufacturer, such preconditioning may be allowed with the advance approval of the Administrator.

(4) The Administrator may also choose to conduct or require the conduct of additional preconditioning to insure that the evaporative emission control system is stabilized in the case of gasoline-fueled and methanol-fueled vehicles, or to insure that the exhaust system is stabilized in the case of petroleum-fueled, natural gas-fueled, liquefied petroleum gas-fueled and methanol-fueled diesel vehicles.

(i) *Gasoline-fueled and methanol-fueled vehicles.* (A) The additional preconditioning shall consist of an initial one hour minimum soak and, one, two, or three driving cycles of the UDDS, as described in (a)(2) of this section, each followed by a soak of at least one hour with engine off, engine compartment cover closed and cooling fan off.

(B) The vehicle may be driven off the dynamometer following each UDDS for the soak period.

(ii) *Petroleum-fueled diesel vehicles, natural gas-fueled and liquefied petroleum gas-fueled vehicles.* The preconditioning shall consist of either of the following:

(A) The additional preconditioning described in paragraph (a)(4)(i) of this section; or

(B) For abnormally treated vehicles, as defined in § 86.085–2, two Highway Fuel Economy Driving Schedules, found in part 600 appendix I, run in immediate succession, with the road load power set at twice the value obtained from § 86.129–80.

(b) Within five minutes of completion of preconditioning, the vehicle shall be driven off the dynamometer and parked. The vehicle shall be stored for not less than 12 hours nor for more than 36 hours prior to the cold start exhaust test. (Gasoline-fueled and methanol-fueled vehicles undergo a one-hour diurnal heat build prior to the cold start exhaust test. A wait of up to one hour is permitted between the end of the diurnal heat build and the beginning of the cold start exhaust test. See § 86.130 and Figure B79–5.)

(c) Vehicles to be tested for evaporative emissions shall be processed in accordance with procedures in §§ 86.133 through 86.138. Vehicles to be tested for exhaust emissions only shall be processed according to § 86.133 through § 86.137.

[54 FR 14527, Apr. 11, 1989, as amended at 59 FR 48509, Sept. 21, 1994]

§ 86.132–96 Vehicle preconditioning.

(a) Fuel tank cap(s) of gasoline- and methanol-fueled vehicles shall be removed during any period that the vehicle is parked outdoors awaiting testing, to prevent unusual loading of the canisters. During this time care must be taken to prevent entry of water or other contaminants into the fuel tank. During storage in the test area while awaiting testing, the fuel tank cap(s) may be in place. The vehicle shall be moved into the test area and the following operations performed.

(b)(1) *Gasoline- and Methanol-Fueled Vehicles.* Drain the fuel tank(s) and fill with test fuel, as specified in § 86.113, to the ''tank fuel volume'' defined in § 86.082–2. The fuel cap(s) shall be installed within one minute after refueling.

(2) *Gaseous-Fueled Vehicles.* Vehicle fuel tanks to be filled with fuel that meets the specifications in § 86.113. Fuel tanks shall be filled to a minimum of 75% of service pressure for natural gas-fueled vehicles or a minimum of 75% of available fill volume for liquefied petroleum gas-fueled vehicles. Prior draining of the fuel tanks is not called for if the fuel in the tanks already meets the specifications in § 86.113.

(c)(1) Gasoline- and methanol-fueled vehicles shall be soaked for at least 6 hours after being refueled. Petroleum-fueled diesel vehicles and gaseous-fueled vehicles shall be soaked for at least 1 hour after being refueled. Following this soak period, the test vehicle shall be placed, either by being driven or pushed, on a dynamometer and operated through one Urban Dynamometer Driving Schedule (UDDS), specified in § 86.115 and appendix I of this part.

(2) Once a test vehicle has completed the refueling and vehicle soak steps specified in paragraphs (b) and (c)(1) of this section, these steps may be omitted in subsequent testing with the same vehicle and the same fuel specifications, provided the vehicle remains under laboratory ambient temperature

conditions for at least 6 hours before starting the next test. In such cases, each subsequent test shall begin with the preconditioning drive specified in this paragraph. The test vehicle may not be used to set dynamometer horsepower.

(d) For unusual circumstances where the need for additional preconditioning is demonstrated by the manufacturer, such preconditioning may be allowed with the advance approval of the Administrator.

(e) The Administrator may also choose to conduct or require to be conducted additional preconditioning to ensure that the evaporative emission control system is stabilized in the case of gasoline-fueled and methanol-fueled vehicles, or to ensure that the exhaust system is stabilized in the case of petroleum- and methanol-fueled diesel vehicles. The preconditioning shall consist of one of the following:

(1) *For gasoline- and methanol-fueled vehicles.* (i) Additional preconditioning shall consist of no more than 50 miles of mileage accumulation under typical driving conditions, either on the road or on a dynamometer.

(ii) In the case of repeat testing on a flexible-fueled vehicle, in which the test fuel is changed, the following preconditioning procedure shall be used. This additional preconditioning allows the vehicle to adapt to the new fuel before the next test run.

(A) Purge the vehicle's evaporative canister for 60 minutes at 0.8 cfm.

(B) Drain the fuel tank(s) and fill with 3 gallons of the test fuel.

(C) Start the vehicle and allow it to idle for 1 minute.

(D) Drain the fuel tank(s) and fill with the new test fuel to the ''tank fuel volume'' defined in § 86.082–2. The average temperature of the dispensed fuel shall be less than 60 °F.

(E) Conduct a heat build according to the procedure specified in § 86.133–90.

(F) The vehicle shall be placed, either by being driven or pushed, on a dynamometer and operated through one UDDS, specified in § 86.115 and appendix I of this part.

(G) Following the dynamometer drive, the vehicle shall be turned off for 5 minutes, then restarted and allowed to idle for 1 minute. The vehicle shall then be turned off for 1 minute, and allowed to idle again for 1 minute.

(H) After the vehicle is turned off the last time, it may be tested for evaporative and exhaust emissions, starting with paragraph (a) of this section.

(2) *For petroleum-fueled diesel, methanol-fueled diesel, and gaseous-fueled vehicles.* The preconditioning shall consist of either of the following:

(i) An initial one hour minimum soak and, one, two, or three driving cycles of the UDDS, as described in paragraph (c) of this section, each followed by a soak of at least one hour with engine off, engine compartment cover closed and cooling fan off. The vehicle may be driven off the dynamometer following each UDDS for the soak period; or

(ii) For abnormally treated vehicles, as defined in § 86.085–2, two Highway Fuel Economy Driving Schedules, found in appendix I of part 600, run in immediate succession, with the road load power set at twice the value obtained from § 86.129.

(f)(1) *Gasoline- and methanol-fueled vehicles.* After completion of the preconditioning drive, the vehicle shall be driven off the dynamometer. The vehicle's fuel tank(s) shall be drained and then filled with test fuel, as specified in § 86.113, to the ''tank fuel volume'' defined in § 86.082–2. The vehicle shall be refueled within 1 hour after completion of the preconditioning drive. The fuel cap(s) shall be installed within 1 minute after refueling. The vehicle shall be parked within five minutes after refueling.

(2) *Petroleum-fueled diesel vehicles.* Within five minutes after completion after the preconditioning drive, the vehicle shall be driven off the dynamometer and parked.

(3) *Gaseous-fueled vehicles.* After completion of the preconditioning drive, the vehicle shall be driven off the dynamometer. Vehicle fuel tanks shall be refilled with fuel that meets the specifications in § 86.113. Fuel tanks shall be filled to a minimum of 75% of service pressure for natural gas-fueled vehicles or a minimum of 75% of available fill volume for liquefied petroleum gas-fueled vehicles. Prior draining of the fuel tanks is not called for if the fuel in the tanks already meets the specifications in § 86.113. The vehicle shall be

parked within five minutes after refueling, or, in the absence of refueling, within five minutes after completion of the preconditioning drive.

(g) The vehicle shall be soaked for not less than 12 hours nor more than 36 hours between the end of the refueling event and the beginning of the cold start exhaust emission test.

(h) During the soak period for the three-diurnal test sequence described in § 86.130–96, evaporative canisters, if the vehicle is so equipped, shall be preconditioned according to the following procedure. For vehicles with multiple canisters in a series configuration, the set of canisters must be preconditioned as a unit. For vehicles with multiple canisters in a parallel configuration, each canister must be preconditioned separately. If production evaporative canisters are equipped with a functional service port designed for vapor load or purge steps, the service port shall be used during testing to precondition the canister. In addition, for model year 1998 and later vehicles equipped with refueling canisters, these canisters shall be preconditioned for the three-diurnal test sequence according to the procedure in paragraph (j)(1) of this section. If a vehicle is designed to actively control evaporative or refueling emissions without a canister, the manufacturer shall devise an appropriate preconditioning procedure, subject to the approval of the Administrator.

(1)(i) Prepare the evaporative emission canister for the canister purging and loading operation. The canister shall not be removed from the vehicle, unless access to the canister in its normal location is so restricted that purging and loading can only reasonably be accomplished by removing the canister from the vehicle. Special care shall be taken during this step to avoid damage to the components and the integrity of the fuel system. A replacement canister may be temporarily installed during the soak period while the canister from the test vehicle is preconditioned.

(ii) The canister purge shall be performed with ambient air of humidity controlled to 50±25 grains per pound of dry air. This may be accomplished by purging the canister in a room that is conditioned to this level of absolute humidity. The flow rate of the purge air shall be maintained at a nominal flow rate of 0.8 cfm and the duration shall be determined to provide a total purge volume flow through the canister equivalent to 300 canister bed volume exchanges. The bed volume is based on the volume of adsorbing material in the canister.

(iii) The evaporative emission canister shall then be loaded by sending to the canister an amount of commercial grade butane vapors equivalent to 1.5 times its nominal working capacity. The canister shall be loaded with a mixture composed of 50 percent butane and 50 percent nitrogen by volume at a rate of 15±2 grams butane per hour. If the canister loading at that rate takes longer than 12 hours, a manufacturer may determine a new rate, based on completing the canister loading in no less than 12 hours. The new rate may be used for all subsequent canister loading according to paragraph (h) of this section. The time of initiation and completion of the canister loading shall be recorded.

(iv) The determination of a canister's nominal working capacity shall be based on the average capacity of no less than five canisters that are in a stabilized condition.

(A) For stabilization, each canister must be loaded no less than 10 times and no more than 100 times to 2-gram breakthrough with a 50/50 mixture by volume of butane and nitrogen, at a rate of 15 grams butane per hour. Each canister loading step must be preceded by canister purging with 300 canister bed volume exchanges at 0.8 cfm.

(B) For determining working capacity, each canister must first be purged with 300 canister bed volume exchanges at 0.8 cfm. The working capacity of each canister shall be established by determining the mass of butane required to load the canister from the purged state so that it emits 2 grams of hydrocarbon vapor; the canister must be loaded with a 50/50 mixture by volume of butane and nitrogen, at a rate of 15 grams butane per hour.

(2) For methanol-fueled and flexible-fueled vehicles, canister preconditioning shall be performed with a fuel vapor composition representative of that which the vehicle would generate

with the fuel mixture used for the current test. Manufacturers shall develop a procedure to precondition the evaporative canister, if the vehicle is so equipped, for the different fuel. The procedure shall represent a canister loading equivalent to that specified in paragraph (h)(1) of this section and shall be approved in advance by the Administrator.

(i) [Reserved]

(j) For the supplemental two-diurnal test sequence described in § 86.130–96, one of the following methods shall be used to precondition evaporative canisters during the soak period specified in paragraph (g) of this section. For vehicles with multiple canisters in a series configuration, the set of canisters must be preconditioned as a unit. For vehicles with multiple canisters in a parallel configuration, each canister must be preconditioned separately. In addition, for model year 1998 and later vehicles equipped with refueling canisters, these canisters shall be preconditioned for the supplemental two-diurnal test sequence according to the procedure in paragraph (j)(1) of this section. Canister emissions are measured to determine breakthrough. Breakthrough is here defined as the point at which the cumulative quantity of hydrocarbons emitted is equal to 2 grams.

(1) *Butane loading to breakthrough.* The following procedure provides for emission measurement in an enclosure. Breakthrough may also be determined by measuring the weight gain of an auxiliary evaporative canister connected downstream of the vehicle's canister, in which case, the following references to the enclosure can be ignored. The auxiliary canister shall be well purged prior to loading. If production evaporative canisters are equipped with a functional service port designed for vapor load or purge steps, the service port shall be used during testing to precondition the canister.

(i) Prepare the evaporative/refueling emission canister for the canister loading operation. The canister shall not be removed from the vehicle, unless access to the canister in its normal location is so restricted that purging and loading can only reasonably be accomplished by removing the canister from the vehicle. Special care shall be taken during this step to avoid damage to the components and the integrity of the fuel system. A replacement canister may be temporarily installed during the soak period while the canister from the test vehicle is preconditioned.

(ii) The evaporative emission enclosure shall be purged for several minutes. Warning: If at any time the concentration of hydrocarbons, of methanol, or of methanol and hydrocarbons exceeds 15,000 ppm C the enclosure should be immediately purged. This concentration provides at least a 4:1 safety factor against the lean flammability limit.

(iii) The FID hydrocarbon analyzer shall be zeroed and spanned immediately prior to the canister loading procedure.

(iv) If not already on, the evaporative enclosure mixing fan shall be turned on at this time.

(v) Place the vehicle in a sealed enclosure and measure emissions with a FID.

(vi)(A) For gasoline-fueled vehicles, load the canister with a mixture composed of 50 percent butane and 50 percent nitrogen by volume at a rate of 40 grams butane per hour.

(B) For methanol-fueled and flexible-fueled vehicles, canister preconditioning shall be performed with a fuel vapor composition representative of that which the vehicle would generate with the fuel mixture used for the current test. Manufacturers shall develop a procedure to precondition the evaporative canister, if the vehicle is so equipped, for the different fuel.

(vii) As soon as the canister reaches breakthrough, the vapor source shall be shut off.

(viii) Reconnect the evaporative/refueling emission canister and restore the vehicle to its normal operating condition.

(2) *Load with repeated diurnal heat builds to breakthrough.* The following procedure provides for emission measurement in an enclosure. Breakthrough may also be determined by measuring the weight gain of an auxiliary evaporative canister connected downstream of the vehicle's canister, in which case,

the following references to the enclosure can be ignored. The auxiliary canister shall be well purged with dry air prior to loading.

(i) The evaporative emission enclosure shall be purged for several minutes. WARNING: If at any time the concentration of hydrocarbons, of methanol, or of methanol and hydrocarbons exceeds 15,000 ppm C the enclosure should be immediately purged. This concentration provides at least a 4:1 safety factor against the lean flammability limit.

(ii) The FID hydrocarbon analyzer shall be zeroed and spanned immediately prior to the diurnal heat builds.

(iii) If not already on, the evaporative enclosure mixing fan shall be turned on at this time.

(iv) The fuel tank(s) of the prepared vehicle shall be drained and filled with test fuel, as specified in § 86.113, to the ''tank fuel volume'' defined in § 86.082–2. The average temperature of the dispensed fuel shall be 60±12 °F (16±7 °C). The fuel tank cap(s) shall be installed within 1 minute after refueling.

(v) Within one hour of being refueled, the vehicle shall be placed, with the engine shut off, in the evaporative emission enclosure. The fuel tank temperature sensor shall be connected to the temperature recording system. A heat source, specified in § 86.107–90(a)(4), shall be properly positioned with respect to the fuel tank(s) and connected to the temperature controller.

(vi) The temperature recording system shall be started.

(vii) The fuel may be artificially heated to the starting diurnal temperature.

(viii) When the fuel temperature reaches at least 69 °F (21 °C), immediately: turn off purge blower (if not already off); close and seal enclosure doors; and initiate measurement of the hydrocarbon level in the enclosure.

(ix) When the fuel temperature reaches 72±2 °F (22±1 °C), start the diurnal heat build.

(x) The fuel shall be heated in such a way that its temperature change conforms to the following function to within ±4 °F (±3 °C):

$F=T_o+0.4t$; or

for SI units,

$C=T_o+(2/9)t$.

Where,

F=fuel temperature, °F;
C=fuel temperature, °C;
t=time since beginning of test, minutes; and
T_o=initial temperature in °F (°C for SI units).

(xi) As soon as breakthrough occurs or when the fuel temperature reaches 96 °F (36 °C), whichever occurs first, the heat source shall be turned off, the enclosure doors shall be unsealed and opened, and the vehicle fuel tank cap(s) shall be removed. If breakthrough has not occurred by the time the fuel temperature reaches 96 °F (36 °C), the heat source shall be removed from the vehicle, the vehicle shall be removed (with engine still off) from the evaporative emission enclosure and the entire procedure outlined in paragraph (j)(2) of this section shall be repeated until breakthrough occurs.

(xii) After breakthrough occurs, the fuel tank(s) of the prepared vehicle shall be drained and filled with test fuel, as specified in § 86.113, to the ''tank fuel volume'' defined in § 86.082–2. The fuel shall be stabilized to a temperature within 3 °F of the lab ambient before beginning the driving cycle for the exhaust emission test.

(k) The Administrator may conduct the vehicle preparation and preconditioning for measurement of fuel economy or exhaust emissions according to the procedures specified in §§ 86.132–90 and 86.133–90, in lieu of the procedures specified in this section.

(l) Vehicles to be tested for exhaust emissions only shall be processed according to §§ 86.135 through 86.137. Vehicles to be tested for evaporative emissions shall be processed in accordance with the procedures in §§ 86.133 through 86.138, starting with § 86.135.

(m) Vehicles to be tested for evaporative emissions with the supplemental two-diurnal test sequence described in § 86.130–96, shall proceed according to §§ 86.135 through 86.137, followed by the supplemental hot soak test (see § 86.138–96(k)) and the supplemental diurnal emission test (see § 86.133–96(p)).

[58 FR 16037, Mar. 24, 1993, as amended at 59 FR 16296, Apr. 6, 1994; 59 FR 48509, Sept. 21, 1994; 60 FR 43895, Aug. 23, 1995]

§86.133–90 Diurnal breathing loss test.

(a)(1) Following vehicle preparation and vehicle preconditioning procedures described in §§86.131 and 86.132 the test vehicle shall be allowed to soak for a period of not less than 12 or more than 36 hours prior to the exhaust emission test. The diurnal test shall start not less than 10 or more than 35 hours after the end of the preconditioning procedure. The start of the exhaust test shall follow the end of the diurnal test within one hour.

(2) Gasoline-fueled and methanol-fueled vehicles to be tested for exhaust emissions only shall undergo the diurnal heat build. Since no evaporative measurements are necessary, an evaporative enclosure is not required.

(b) The evaporative emission enclosure shall be purged for several minutes immediately prior to the test.

NOTE: If at any time the concentration of hydrocarbons, of methanol or of methanol and hydrocarbons exceeds 15,000 ppm C the enclosure should be immediately purged. The concentration provides a 4:1 safety factor of hydrocarbons and methanol against the lean flammability limit.

(c) The FID (or HFID) hydrocarbon analyzer shall be zeroed and spanned immediately prior to the test.

(d) Impingers charged with known volumes of pure deionized water shall be placed in the methanol sampling system (methanol-fueled vehicles only).

(e) If not already on, evaporative enclosure mixing fan shall be turned on at this time.

(f) Immediately prior to the diurnal breathing loss test, the fuel tank(s) of the prepared vehicle shall be drained and recharged with the specified test fuel, §86.113, to the prescribed ''tank fuel volume,'' defined in §86.078–2. The temperature of the fuel prior to its delivery to the fuel tank shall be between 45° and 60 °F (7.2 °C and 16 °C). The fuel tank cap(s) is not installed until the diurnal heat build begins.

(g) The test vehicle, with the engine shut off, shall be moved into the evaporative emission enclosure, the test vehicle windows and luggage compartment(s) shall be opened, the fuel tank temperature sensor shall be connected to the temperature recording system, and, if required, the heat source shall be properly positioned with respect to the fuel tank(s) and/or connected to the temperature controller.

(h) The temperature recording system shall be started.

(i) The fuel may be artificially heated to the starting diurnal temperature.

(j) When the fuel temperature recording system reaches at least 58 °F (14 °C), immediately:

(1) Install fuel tank cap(s).

(2) Turn off purge blowers, if not already off at this time.

(3) Close and seal enclosure doors.

(k) When the fuel temperature recording system reaches 60°±2 °F (16°±1.1 °C), immediately:

(1) Analyze enclosure atmosphere for hydrocarbons and record. This is the initial (time = 0 minutes) hydrocarbon concentration, C_{HCi}, §86.143.

(2) Simultaneously with initiation of the hydrocarbon analysis, initiate collection of the methanol sample by drawing a sample from the enclosure through the sampling system for four minutes. This is the initial methanol measurement from which methanol concentration C_{CH3OHi} and mass are calculated. Remove impingers and replace with freshly charged clean impingers which will be used to collect the final methanol sample.

(3) Start diurnal heat build and record time. This commences the 60±2 minute test period.

(l) The fuel shall be heated in such a way that its temperature change conforms to the following function to within ±3 °F (±1.6 °C):

(1) $F = T_o + 0.4t$.

(2) For SI units, $C = T_o + (2/9)t$.

Where:

(3) F = fuel temperature, °F.

(4) C = fuel temperature, °C.

(5) t = time since beginning of test, minutes.

(6) T_o = initial temperature.

After 60±2 minutes of heating, the fuel temperature rise shall be 24°±1 °F (13.4 °C±0.5 °C).

(m) The FID hydrocarbon analyzer shall be zeroed and spanned immediately prior to the end of the diurnal test.

(n) The end of the diurnal breathing loss test occurs 60±2 minutes after the heat build begins, paragraph (j)(2). Analyze the enclosure atmosphere for

hydrocarbons and record. This is the final (time = 60 minutes) hydrocarbon concentration, C_{HCf}, § 86.143. The time (or elapsed time) of this analysis shall be recorded.

(o) Simultaneously with the start of the hydrocarbon analysis, initiate collection of the methanol sample. Sample for 4.0±0.5 minutes. This is the final methanol sample.

(p) *Alternate method for methanol sampling.* Since sample times of longer than four minutes may be necessary in order to collect an adequate and representative sample of methanol at the end of a test (when SHED concentrations are usually increasing rapidly), it may be necessary to rapidly collect the methanol sample in a bag and then bubble the bag sample through the impingers at the specified flow rate. The time elapsed between collection of the bag sample and flowing through the impingers should be minimized in order to prevent any losses. This alternative must be adopted if the four minute sample period is inadequate to collect a sample of sufficient concentration to allow accurate GC analysis.

(q) Once the final methanol sample has been collected, the heat source shall be turned off and the enclosure doors unsealed and opened.

(r) The heat source shall be moved away from the vehicle, if required, and/or disconnected from the temperature controller, the fuel tank temperature sensor shall be disconnected from the temperature recording system, the test vehicle windows and luggage compartments may be closed and the test vehicle, with the engine shut off, shall be removed from the evaporative emission enclosure.

(s) For vehicles with multiple tanks, the largest tank shall be designated as the primary tank and shall be heated in accordance with the procedures described in paragraph (1) of this section. All other tanks shall be designated as auxiliary tanks and shall undergo a similar heat build such that the fuel temperature shall be within 3 °F (1.6 °C) of the primary tank.

[54 FR 14528, Apr. 11, 1989]

§ 86.133–96 Diurnal emission test.

(a)(1) The diurnal emission test for gasoline-, methanol- and gaseous-fueled vehicles consists of three 24-hour test cycles following the hot soak test. Emissions are measured for each 24-hour cycle, with the highest emission level used to determine compliance with the standards specified in subpart A of this part. The Administrator may truncate a test after any 24-hour cycle without affecting the validity of the collected data. Sampling of emissions from the running loss and hot soak tests is not required as preparation for the diurnal emission test. The diurnal emission test may be conducted as part of either the three- diurnal test sequence or the supplemental two-diurnal test sequence, as described in § 86.130–96.

(2) For the full three-diurnal test sequence, the diurnal emission test outlined in paragraphs (b) through (o) of this section follows the high-temperature hot soak test concluded in § 86.138–96(j).

(3) For the supplemental two-diurnal test sequence, the diurnal emission test outlined in paragraph (p) of this section follows the alternate hot soak test specified in § 86.138–96(k). This test is not required for gaseous-fueled vehicles.

(b) The test vehicle shall be soaked for not less than 6 hours nor more than 36 hours between the end of the hot soak test and the start of the diurnal emission test. For at least the last 6 hours of this period, the vehicle shall be soaked at 72°±3 °F. The temperature tolerance may be waived for up to 10 minutes to allow purging of the enclosure or transporting the vehicle into the enclosure at the beginning of the diurnal emission test.

(c) The test vehicle shall be exposed to ambient temperatures cycled according to the profile specified in § 86.133 and appendix II of this part.

(1) Temperatures measured with the underbody temperature sensor shall follow the profile with a maximum deviation of 3 °F at any time and an average temperature deviation not to exceed 2 °F, where the average deviation is calculated using the absolute value

of each measured deviation. In addition, the temperature from the sidewall temperature sensors shall follow the profile with a maximum deviation of 5 °F at any time.

(2) Ambient temperatures shall be measured at least every minute. Temperature cycling shall begin when time=0 minutes, as specified in paragraph (i)(5) of this section.

(d) The diurnal enclosure shall be purged for several minutes prior to the test. WARNING: If at any time the concentration of hydrocarbons, of methanol or of methanol and hydrocarbons exceeds 15,000 ppm C the enclosure should be immediately purged. This concentration provides at least a 4:1 safety factor against the lean flammability limit.

(e) The test vehicle, with the engine shut off and the test vehicle windows and luggage compartment(s) opened, shall be moved into the diurnal enclosure.

(f)–(g) [Reserved]

(h) Prior to sampling for emissions and throughout the period of cycled ambient temperatures, the mixing fan(s) shall circulate the air at a rate of 0.8±0.2 cfm per cubic foot of ambient volume. The mixing fan(s), plus any additional fans if needed, shall also maintain a minimum wind speed of 5 mph (8 km/hr) under the fuel tank of the test vehicle. The Administrator may adjust fan speed and location to ensure sufficient air circulation around the fuel tank. The wind speed requirement may be satisfied by consistently using a fan configuration that has been demonstrated to maintain a broad 5-mph air flow in the vicinity of the vehicle's fuel tank, subject to verification by the Administrator.

(i) Emission sampling may begin as follows:

(1) The FID (or HFID) hydrocarbon analyzer shall be zeroed and spanned immediately prior to the sampling.

(2) Impingers charged with known volumes of pure deionized water shall be placed in the methanol sampling system (methanol-fueled vehicles only).

(3) Turn off purge blowers (if not already off).

(4) Close and seal enclosure doors (if not already closed and sealed).

(5) Within 10 minutes of closing and sealing the doors, analyze enclosure atmosphere for hydrocarbons and record. This is the initial (time=0 minutes) hydrocarbon concentration, C_{HCi}, required in §86.143. Hydrocarbon emissions may be sampled continuously during the test period.

(6) Analyze the enclosure atmosphere for methanol, if applicable, and record. The methanol sampling must start simultaneously with the initiation of the hydrocarbon analysis and continue for 4.0±0.5 minutes. This is the initial methanol concentration, C_{CH_3OHi}, required in §86.143. Record the time elapsed during this analysis. If the 4-minute sample period is inadequate to collect a sample of sufficient concentration to allow accurate GC analysis, rapidly collect the methanol sample in a bag and then bubble the bag sample through the impingers at the specified flow rate. The time elapsed between collection of the bag sample and flow through the impingers should be minimized to prevent any losses. If the test is conducted in a fixed-volume enclosure that allows airflow into and out of the enclosure, the effect of makeup air dilution must be factored into the analysis.

(j) If testing indicates that a vehicle design may result in fuel temperature responses during enclosure testing that are not representative of in-use summertime conditions, the Administrator may adjust air circulation and temperature during the test as needed to ensure that the test sufficiently duplicates the vehicle's in-use experience.

(k) The FID (or HFID) hydrocarbon analyzer shall be zeroed and spanned immediately prior to the end of each emission sampling period.

(l) Fresh impingers shall be installed in the methanol collection system immediately prior to the end of each emission measurement, if applicable.

(m) The end of the first, second, and third emission sampling period shall occur 1440±6, 2880±6, 4320±6 minutes, respectively, after the beginning of the initial sampling, as specified in paragraph (i)(5) of this section.

(1) At the end of each emission sampling period, analyze the enclosure atmosphere for hydrocarbons and record.

This is the final hydrocarbon concentration, C_{HCf}, required in § 86.143. The emission measurement at the end of each period becomes the initial hydrocarbon concentration, C_{HCi}, of the next emission sampling period.

(2) Analyze the enclosure atmosphere for methanol, if applicable, and record. The methanol sampling must start simultaneously with the initiation of the hydrocarbon analysis and continue for 4.0±0.5 minutes. This is the final (time=1440 minutes) methanol concentration, C_{CH_3OHf}, required in § 86.143. Record the time elapsed during this analysis. If the 4-minute sample period is inadequate to collect a sample of sufficient concentration to allow accurate GC analysis, rapidly collect the methanol sample in a bag and then bubble the bag sample through the impingers at the specified flow rate. The time elapsed between collection of the bag sample and flow through the impingers should be minimized to prevent any losses. If the test is conducted in a fixed-volume enclosure that allows airflow into and out of the enclosure, the effect of makeup air dilution must be factored into the analysis.

(n) At the end of the temperature cycling period the enclosure doors shall be unsealed and opened, the test vehicle windows and luggage compartments may be closed and the test vehicle, with the engine shut off, shall be removed from the enclosure.

(o) This completes the full three-diurnal evaporative emission test sequence described in § 86.130–96.

(p) For the supplemental two-diurnal test sequence described in § 86.130–96, the following steps shall be performed in lieu of the steps described in paragraphs (b) through (n) of this section.

(1) For the supplemental two-diurnal test sequence, the test vehicle shall be soaked for not less than 6 hours nor more than 36 hours between the end of the hot soak test described in § 86.138–96(k), and the start of the two-diurnal emission test. For at least the last 6 hours of this period, the vehicle shall be soaked at 72±3 °F.

(2) The vehicle shall be tested for diurnal emissions according to the procedures specified in paragraphs (c) through (n) of this section, except that the test includes only two 24-hour periods. Therefore the end of the first and second emission sampling periods shall occur 1440±6 and 2880±6 minutes, respectively, after the initial sampling.

(3) This completes the supplemental two-diurnal test sequence for evaporative emission measurement.

[58 FR 16039, Mar. 24, 1993, as amended at 59 FR 48509, Sept. 21, 1994; 60 FR 43896, Aug. 23, 1995]

§ 86.134–96 Running loss test.

(a) *Overview.* Gasoline- and methanol-fueled vehicles are to be tested for running loss emissions during simulated high-temperature urban driving; this test is not required for gaseous-fueled vehicles. During operation, tank temperatures are controlled according to a prescribed profile to simulate in-use conditions. If the vehicle is determined to have exceeded the standard before the end of the running loss test, the test may be terminated without invalidating the data. The test can be run either in a sealed enclosure or with the point-source method, as specified in paragraph (g) of this section. Measurement of vapor temperature is optional during the running loss test; however, if testing by the Administrator shows that a vehicle has exceeded an emission standard without measurement of vapor temperatures, the manufacturer may, utilizing its own resources, conduct subsequent testing on that vehicle to determine if the exceedance is attributable to inadequate control of vapor temperatures.

(b) *Driving schedule.* Conduct the running loss test by operating the test vehicle through one Urban Dynamometer Driving Schedule (UDDS), a 2-minute idle, two New York City Cycles, another 2-minute idle, another UDDS, then another 2-minute idle (see § 86.115 and appendix I of this part). Fifteen seconds after the engine starts, place the transmission in gear. Twenty seconds after the engine starts, begin the initial vehicle acceleration of the driving schedule. The transmission shall be operated according to the specifications of § 86.128 during the driving cycles.

(c) *Dynamometer Operation.* (1) The exhaust from the vehicle must be routed

outside the test cell or enclosure. Exhaust gases may, but need not, be collected and sampled.

(2) Provisions of § 86.135–90(c) shall apply.

(3) Practice runs over the prescribed driving schedule may not be performed at test point.

(4) Provisions of § 86.135–90 (e) and (f) shall apply.

(5) If the dynamometer horsepower must be adjusted manually, it shall be set within 1 hour prior to the running loss test phase. The test vehicle shall not be used to make this adjustment. Dynamometers using automatic control of preselectable power settings may be set any time prior to the beginning of the emissions test.

(6) Dynamometer roll or shaft revolutions shall be used to determine the actual driving distance for the running loss test, D_{RL}, required in § 86.143. The revolutions shall be measured on the same roll or shaft used for measuring the vehicle's speed.

(7) Provisions of § 86.135–90(i) shall apply.

(8) The test run may be stopped if a warning light or gauge indicates that the vehicle's engine coolant has overheated.

(d) *Engine Starting and Restarting.* (1) Provisions of § 86.136–90(a) shall apply.

(2) If the vehicle does not start after the manufacturer's recommended cranking time (or 10 continuous seconds in the absence of a manufacturer's recommendation), cranking shall cease for the period recommended by the manufacturer (or 10 seconds in the absence of a manufacturer's recommendation). This may be repeated for up to three start attempts. If the vehicle does not start after three attempts, the reason for failure to start shall be determined. If failure to start is an operational error, the vehicle shall be rescheduled for testing, starting with the soak period immediately preceding the running loss test.

(3) If failure to start is caused by a vehicle malfunction, corrective action of less than 30 minutes duration may be taken (according to § 86.090–25), and the test continued, provided that the ambient conditions to which the vehicle is exposed are maintained at 95±5 °F (35±3 °C). When the engine starts, the timing sequence of the driving schedule shall begin. If failure to start is caused by vehicle malfunction and the vehicle cannot be started, the test shall be voided, the vehicle removed from the dynamometer, and corrective action may be taken according to § 86.090–25. The reason for the malfunction (if determined) and the corrective action taken shall be reported to the Administrator.

(4) Provisions of § 86.136–90(e) shall apply.

(e) *Pressure checks.* No pressure checks of the evaporative system shall be allowed. Under no circumstances will any changes/repairs to the evaporative emissions control system be allowed.

(f) *Temperature stabilization.* Immediately after the hot transient exhaust emission test, the vehicle shall be soaked in a temperature controlled area for a maximum of 6 hours until the fuel temperature is stabilized. The fuel may be heated or cooled to stabilize fuel temperatures, but the fuel heating rate must not exceed 5 °F in any 1-hour interval during the soak period. A manufacturer may use a faster heating rate or a longer period for stabilizing fuel temperatures if the needed heating cannot be easily accomplished in the 6-hour period, subject to Administrator approval.

(1) Fuel temperatures must be held at 95± 3 °F for at least one hour before the start of the running loss test.

(2) If a vehicle's fuel temperature profile has an initial temperature lower than 95 °F, as described in § 86.129–94(d)(7)(v), the fuel in the test vehicle must be stabilized to within 3 °F of that temperature for at least one hour before the start of the running loss test.

(g) *Running loss test.* The running loss test may be conducted either by the enclosure method, or by the point-source method.

(1) *Enclosure method.* (i) The running loss enclosure shall be purged for several minutes immediately prior to the test. WARNING: If at any time the concentration of hydrocarbons, of methanol, or of methanol and hydrocarbons exceeds 15,000 ppm C the enclosure should be immediately purged. This concentration provides at least a 4:1

safety factor against the lean flammability limit.

(ii) The FID hydrocarbon analyzer shall be zeroed and spanned immediately prior to the test.

(iii) If not already on, the running loss enclosure mixing fan(s) shall be turned on at this time. Throughout the test, the mixing fan(s) shall circulate the air at a rate of at least 1.0 cfm per cubic foot of ambient volume.

(iv) The test vehicle, with the engine off, shall be moved onto the dynamometer in the running loss enclosure. The vehicle engine compartment cover shall be unlatched, but closed as much as possible, allowing for the air intake equipment specified in paragraph (g)(1)(vii) of this section. The vehicle engine compartment cover may be closed if alternate routing is found for the air intake equipment. Any windows, doors, and luggage compartments shall be closed. A window may be opened to direct cooling air into the passenger compartment of the vehicle, if the vehicle is not equipped with its own air conditioning.

(v) Fans shall be positioned as described in §§ 86.107–96 (d) and (h).

(vi) The vehicle air conditioning system (if so equipped) shall be set to the ''normal'' air conditioning mode and adjusted to the minimum discharge air temperature and high fan speed. Vehicles equipped with automatic temperature controlled air conditioning systems shall be set to operate in ''automatic'' temperature and fan modes with the system set at 72 °F.

(vii) Connect the air intake equipment to the vehicle, if applicable. This connection shall be made to minimize leakage.

(viii) The temperature and pressure recording systems shall be started. Measurement of vapor temperature is optional during the running loss test. If vapor temperature is not measured, fuel tank pressure need not be measured.

(ix) Turn off purge blowers (if not already off).

(x) The temperature of the liquid fuel shall be monitored and recorded at least every 15 seconds with the temperature recording system specified in § 86.107–96(e).

(xi) Close and seal the enclosure doors.

(xii) When the ambient temperature is 95±5 °F (35±3 °C) and the fuel has been stabilized according to paragraph (f) of this section, the running loss test may begin. Measure the initial ambient temperature and pressure.

(A) Analyze enclosure atmosphere for hydrocarbons and record. This is the initial (time=0 minutes) hydrocarbon concentration, C_{HCi}, required in § 86.143. Hydrocarbon emissions may be sampled continuously during the test period.

(B) Analyze the enclosure atmosphere for methanol, if applicable, and record. The methanol sampling must start simultaneously with the initiation of the hydrocarbon analysis and continue for 4.0±0.5 minutes. This is the initial (time=0 minutes) methanol concentration, C_{CH_3OHi}, required in § 86.143. Record the time elapsed during this analysis. If the 4-minute sample period is inadequate to collect a sample of sufficient concentration to allow accurate GC analysis, rapidly collect the methanol sample in a bag and then bubble the bag sample through the impingers at the specified flow rate. The time elapsed between collection of the bag sample and flow through the impingers should be minimized to prevent any losses.

(xiii) Start the engine and begin operation of the vehicle over the drive cycle specified in paragraph (b) of this section.

(xiv) The ambient temperature shall be maintained at 95±5 °F (95±2 °F on average) during the running loss test, measured at the inlet to the cooling fan in front of the vehicle; it shall be recorded at least every 60 seconds.

(xv) The fuel temperature during the dynamometer drive shall be controlled to match the fuel tank temperature profile determined in § 86.129. Measured fuel temperatures must be within ±3 °F of the target profile throughout the test run. Vapor temperatures, if measured, must be within ±5 °F of the target profile during the first 4186 seconds of the running loss test, and within ±3 °F for the remaining 120 seconds of the test run. For any vehicle complying

with the test standards, vapor temperatures may be higher than the specified tolerances without invalidating test results. For testing by the Administrator, vapor temperatures may be lower than the specified tolerances without invalidating test results. If the test vehicle has more than one fuel tank, the temperatures for both fuel tanks shall follow the target profiles determined in § 86.129. The control system shall be tuned and operated to provide smooth and continuous tank temperature profiles that are representative of the on-road profiles.

(xvi) Tank pressure shall not exceed 10 inches of water at any time during the running loss test unless a pressurized system is used and the manufacturer demonstrates that vapor would not be vented to the atmosphere upon fuel cap removal. A vehicle may exceed the pressure limit for temporary periods during the running loss test, up to 10 percent of the total driving time, provided that the vehicle has demonstrated conformance with the pressure limit during the entire outdoor driving period specified in § 86.129. Measurement of fuel tank pressures will be considered valid only if vapor temperatures are measured and controlled to the tolerances specified in paragraph (g)(1)(xv) of this section.

(xvii) The FID (or HFID) hydrocarbon analyzer shall be zeroed and spanned immediately prior the end of the test.

(xviii) Fresh impingers shall be installed in the methanol collection system immediately prior to the end of the test, if applicable.

(xix) The running loss test ends with the completion of the third 2-minute idle period.

(xx) At the end of the running loss test:

(A) Analyze the enclosure atmosphere for hydrocarbons and record. This is the final hydrocarbon concentration, C_{HCf}, required in § 86.143.

(B) Analyze the enclosure atmosphere for methanol, if applicable, and record. The methanol sampling must start prior to the end of the test and continue for 4.0±0.5 minutes. The methanol sampling must be completed within 2 minutes after the end of the running loss test. This is the final methanol concentration, C_{CH_3OHf}, required in § 86.143. Record the time elapsed during this analysis. If the 4-minute sample period is inadequate to collect a sample of sufficient concentration to allow accurate GC analysis, rapidly collect the methanol sample in a bag and then bubble the bag sample through the impingers at the specified flow rate. The time elapsed between collection of the bag sample and flow through the impingers should be minimized to prevent any losses.

(C) Turn off all the fans specified in § 86.107–96(d). Also, the time that the vehicle's engine compartment cover is open for removal of air intake equipment, if applicable, shall be minimized to avoid loss of heat from the engine compartment.

(xxi) Turn off any CVS apparatus (if not already turned off).

(2) *Point-source method.* (i) The test vehicle, with the engine off, shall be moved onto the dynamometer. The vehicle engine compartment cover and any windows, doors, and luggage compartments shall be closed.

(ii) Fans shall be positioned as described in §§ 86.135–90(b) and 86.107–96(d).

(iii) The running loss vapor vent collection system shall be properly positioned at the potential fuel vapor vents or leaks of the vehicle's fuel system. Typical vapor vents for current fuel systems are the ports of the evaporative emission canister and the pressure relief vent of the fuel tank (typically integrated into the fuel tank cap).

(iv) The running loss vapor vent collection system may be connected to a PDP–CVS or CFV–CVS bag collection system. Otherwise, running loss vapors shall be sampled continuously with analyzers meeting the requirements of § 86.107–96(b).

(v) Fans shall be positioned as described in § 86.107–96(d).

(vi) The vehicle air conditioning system (if so equipped) shall be set to the ''normal'' air conditioning mode and adjusted to the minimum discharge air temperature and high fan speed. Vehicles equipped with automatic temperature controlled air conditioning systems shall be set to operate in ''automatic'' temperature and fan modes with the system set at 72 °F.

(vii) The temperature and pressure recording systems shall be started. Measurement of vapor temperature is optional during the running loss test. If vapor temperature is not measured, fuel tank pressure need not be measured.

(viii) The temperature of the liquid fuel shall be monitored and recorded at least every 15 seconds with the temperature recording system specified in § 86.107–96(e).

(ix) When the ambient temperature is 95±5 °F (35±3 °C) and the fuel tank temperature is 95±3 °F the running loss test may begin.

(x) The ambient temperature shall be maintained at 95±5 °F (95±2 °F on average) during the running loss test, measured at the inlet to the cooling fan in front of the vehicle; it shall be recorded at least every 60 seconds.

(xi) Fuel temperatures shall be controlled according to the specifications of paragraph (g)(1)(xv) of this section.

(xii) The tank pressure requirements described in paragraph (g)(1)(xvi) of this section apply also to running loss testing by the point source method.

(xiii) The running loss test ends with completion of the third 2-minute idle period.

(xiv) If emissions are collected in bags, the sample bags must be analyzed within 20 minutes of their respective sample collection phases, as described in § 86.137–94(b)(15). The results of the analysis are used in § 86.143 to calculate the mass of hydrocarbons emitted.

(xv) At the end of the running loss test, turn off all the fans specified in § 86.107–96(d).

(h) Following the completion of the running loss drive, the vehicle may be tested for hot soak emissions as specified in § 86.138–96.

[58 FR 16040, Mar. 24, 1993, as amended at 59 FR 48510, Sept. 21, 1994; 60 FR 43896, Aug. 23, 1995]

§ 86.135–00 Dynamometer procedure.

Section 86.135–00 includes text that specifies requirements that differ from § 86.135–90 and § 86.135–94. Where a paragraph in § 86.135–90 or § 86.135–94 is identical and applicable to § 86.135–00, this may be indicated by specifying the corresponding paragraph and the statement ''[Reserved]. For guidance see § 86.135–90.'' or ''[Reserved]. For guidance see § 86.135–94.''

(a) [Reserved]. For guidance see § 86.135–94.

(b) through (c) [Reserved]. For guidance see § 86.135–90.

(d) Practice runs over the prescribed driving schedule may be performed at test point, provided an emission sample is not taken, for the purpose of finding the appropriate throttle action to maintain the proper speed-time relationship, or to permit sampling system adjustment. Both smoothing of speed variations and excessive accelerator pedal perturbations are to be avoided. When using two-roll dynamometers a truer speed-time trace may be obtained by minimizing the rocking of the vehicle in the rolls; the rocking of the vehicle changes the tire rolling radius on each roll. This rocking may be minimized by restraining the vehicle horizontally (or nearly so) by using a cable and winch.

(e) through (i) [Reserved]. For guidance see § 86.135–90.

[61 FR 54894, Oct. 22, 1996]

§ 86.135–90 Dynamometer procedure.

(a) *Overview*—(1) *Gasoline-fueled and methanol-fueled Otto-cycle vehicles.* The dynamometer run consists of two tests, a ''cold'' start test after a minimum 12-hour and a maximum 36-hour soak according to the provisions of §§ 86.132 and 86.133, and a ''hot'' start test following the ''cold'' start test by 10 minutes. Engine startup (with all accessories turned off), operation over the UDDS and engine shutdown make a complete cold start test. Engine startup and operation over the first 505 seconds of the driving schedule complete the hot start test. The exhaust emissions are diluted with ambient air and a continuously proportional sample is collected for analysis during each phase. The composite samples collected in bags are analyzed for hydrocarbon, carbon monoxide, carbon dioxide, and oxides of nitrogen. A parallel sample of the dilution air is similarly analyzed for hydrocarbon, carbon monoxide, carbon dioxide, and oxides of nitrogen. Methanol and formaldehyde samples (exhaust and dilution air) are collected and analyzed for methanol-fueled vehicles (a single dilution air formaldehyde

sample covering the total time of the test may be collected in place of three individual samples). Methanol and formaldehyde samples may be omitted for 1990 through 1994 model years when a FID calibrated on methanol is used.

(2) *Petroleum-fueled and methanol-fueled diesel vehicles.* The dynamometer run consists of two tests, a ''cold'' start test after a minimum 12-hour and a maximum 36-hour soak according to the provisions of §§ 86.132 and 86.133, and a ''hot'' start test following the ''cold'' start by 10 minutes. Engine startup (with all accessories turned off), operation over the UDDS, and engine shutdown make a complete cold start test. Engine startup and operation over the first 505 seconds of the driving schedule complete the hot start test. The exhaust emissions are diluted with ambient air in the dilution tunnel as shown in Figure B90–5 and Figure B90–6. Six particulate samples are collected on filters for weighing; the first sample plus back-up is collected during the first 505 seconds of the cold start test; the second sample plus back-up is collected during the remainder of the cold start test (including shutdown); the third sample plus back-up is collected during the hot start test. Continuous proportional samples of gaseous emissions are collected for analysis during each test phase. For petroleum-fueled vehicles, the composite samples collected in bags are analyzed for carbon monoxide, carbon dioxide, and oxides of nitrogen. Hydrocarbons from petroleum-fueled vehicles are sampled and analyzed continuously according to the provisions of § 86.110. Parallel samples of the dilution air are similarly analyzed for hydrocarbon, carbon monoxide, carbon dioxide, and oxides of nitrogen. For methanol-fueled vehicles, bag samples are collected and analyzed for hydrocarbons, carbon monoxide, carbon dioxide, and oxides of nitrogen. Methanol and formaldehyde samples are taken for both exhaust emissions and dilution air (a single dilution air formaldehyde sample, covering the total test period may be collected). Methanol and formaldehyde samples may be omitted for 1990 through 1994 model years when an FID calibrated on methanol is used. Parallel bag samples of dilution air are analyzed for hydrocarbons, carbon monoxide, carbon dioxide, and oxides of nitrogen.

(b) During dynamometer operation, a fixed speed cooling fan shall be positioned so as to direct cooling air to the vehicle in an appropriate manner with the engine compartment cover open. In the case of vehicles with front engine compartments, the fan shall be squarely positioned within 12 inches (30.5 centimeters) of the vehicle. In the case of vehicles with rear engine compartments (or if special designs make the above impractical), the cooling fan shall be placed in a position to provide sufficient air to maintain vehicle cooling. The fan capacity shall normally not exceed 5300 cfm (2.50 m^3/s). If, however, the manufacturer can show that during field operation the vehicle receives additional cooling, and that such additional cooling is needed to provide a representative test, the fan capacity may be increased or additional fans used if approved in advance by the Administrator.

(c) The vehicle speed as measured from the dynamometer rolls shall be used. A speed *vs.* time recording, as evidence of dynamometer test validity, shall be supplied on request of the Administrator.

(d) Practice runs over the prescribed driving schedule may be performed at test point, provided an emission sample is not taken, for the purpose of finding the minimum throttle action to maintain the proper speed-time relationship, or to permit sampling system adjustment.

NOTE: When using two-roll dynamometers a truer speed-time trace may be obtained by minimizing the rocking of the vehicle in the rolls; the rocking of the vehicle changes the tire rolling radius on each roll. This rocking may be minimized by restraining the vehicle horizontally (or nearly so) by using a cable and winch.

(e) The drive wheel tires may be inflated up to a gauge pressure of 45 psi (310 kPa) in order to prevent tire damage. The drive wheel tire pressure shall be reported with the test results.

(f) lf the dynamometer has not been operated during the 2-hour period immediately preceding the test, it shall be warmed up for 15 minutes by operating at 30 mph (48 kph) using a non-test vehicle or as recommended by the dynamometer manufacturer.

(g) If the dynamometer horsepower must be adjusted manually, it shall be set within 1 hour prior to the exhaust emissions test phase. The test vehicle shall not be used to make this adjustment. Dynamometers using automatic control of preselectable power settings may be set anytime prior to the beginning of the emissions test.

(h) The driving distance, as measured by counting the number of dynamometer roll or shaft revolutions, shall be determined for the transient cold start, stabilized cold start, and transient hot start phases of the test. The revolutions shall be measured on the same roll or shaft used for measuring the vehicle's speed.

(i) Four-wheel drive vehicles will be tested in a two-wheel drive mode of operation. Full-time four-wheel drive vehicles will have one set of drive wheels temporarily disengaged by the vehicle manufacturer. Four-wheel drive vehicles which can be manually shifted to a two-wheel mode will be tested in the normal on-highway two-wheel drive mode of operation.

[54 FR 14529, Apr. 11, 1989]

§ 86.135–94 Dynamometer procedure.

Section 86.135–94 includes text that specifies requirements that differ from § 86.135–90. Where a paragraph in § 86.135–90 is identical and applicable to § 86.135–94, this may be indicated by specifying the corresponding paragraph and the statement ''[Reserved]. For guidance see § 86.135–90.'' Where a corresponding paragraph of § 86.135–90 is not applicable, this is indicated by the statement ''[Reserved].''

(a) *Overview.* The dynamometer run consists of two tests, a ''cold'' start test, after a minimum 12-hour and a maximum 36-hour soak according to the provisions of §§ 86.132 and 86.133, and a ''hot'' start test following the ''cold'' start by 10 minutes. Engine startup (with all accessories turned off), operation over the UDDS and engine shutdown make a complete cold start test. Engine startup and operation over the first 505 seconds of the driving schedule complete the hot start test. The exhaust emissions are diluted with ambient air in the dilution tunnel as shown in Figure B94–5 and Figure B94–6. A dilution tunnel is not required for testing vehicles waived from the requirement to measure particulates. Six particulate samples are collected on filters for weighing; the first sample plus backup is collected during the first 505 seconds of the cold start test; the second sample plus backup is collected during the remainder of the cold start test (including shutdown); the third sample plus backup is collected during the hot start test. Continuous proportional samples of gaseous emissions are collected for analysis during each test phase. For gasoline-fueled, natural gas-fueled and liquefied petroleum gas-fueled Otto-cycle vehicles, the composite samples collected in bags are analyzed for THC, CO, CO_2, CH_4 and NO_X. For petroleum-fueled diesel-cycle vehicles (optional for natural gas-fueled, liquefied petroleum gas-fueled and methanol-fueled diesel-cycle vehicles), THC is sampled and analyzed continuously according to the provisions of § 86.110. Parallel samples of the dilution air are similarly analyzed for THC, CO, CO_2, CH_4 and NO_X. For natural gas-fueled, liquefied petroleum gas-fueled and methanol-fueled vehicles, bag samples are collected and analyzed for THC (if not sampled continuously), CO, CO_2, CH_4 and NO_X. For methanol-fueled vehicles, methanol and formaldehyde samples are taken for both exhaust emissions and dilution air (a single dilution air formaldehyde sample, covering the total test period may be collected). Parallel bag samples of dilution air are analyzed for THC, CO, CO_2, CH_4 and NO_X. Methanol and formaldehyde samples may be omitted for 1990 through 1994 model years when a FID calibrated on methanol is used.

(b) through (i) [Reserved]. For guidance see § 86.135–90.

[56 FR 25775, June 5, 1991, as amended at 59 FR 48510, Sept. 21, 1994]

§ 86.136–90 Engine starting and restarting.

(a) *Otto-cycle vehicles.* Paragraph (a) of this section applies to Otto-cycle vehicles.

(1) The engine shall be started according to the manufacturer's recommended starting procedures in the owner's manual. The initial 20-second idle period shall begin when the engine starts.

(2) *Choke operation:* (i) Vehicles equipped with automatic chokes shall be operated according to the manufacturer's operating instructions in the owner's manual, including choke setting and ''kick-down'' from cold fast idle.

(ii) Vehicles equipped with manual chokes shall be operated according to the manufacturer's operating instructions in the owner's manual.

(3) The transmission shall be placed in gear 15 seconds after the engine is started. If necessary, braking may be employed to keep the drive wheels from turning.

(4) The operator may use the choke, accelerator pedal, etc., where necessary to keep the engine running.

(5) If the manufacturer's operating instructions in the owner's manual do not specify a warm engine starting procedure, the engine (automatic and manual-choke engines) shall be started by depressing the accelerator pedal about half way and cranking the engine until it starts.

(b) *Diesel vehicles.* The engine shall be started according to the manufacturers recommended starting procedures in the owners manual. The initial 20-second idle period shall begin when the engine starts. The transmission shall be placed in gear 15 seconds after the engine is started. If necessary, braking may be employed to keep the drive wheels from turning.

(c) If the vehicle does not start after the manufacturer's recommended cranking time (or 10 continuous seconds in the absence of a manufacturer's recommendation), cranking shall cease for the period recommended by the manufacturer (or 10 seconds in the absence of a manufacturer's recommendation). This may be repeated for up to three start attempts. If the vehicle does not start after three attempts, the reason for failure to start shall be determined. The gas flow measuring device on the constant volume sampler (usually a revolution counter) or CFV (and the hydrocarbon integrator and particulate sampling system when testing petroleum-fueled diesel vehicles and the particulate sampling system when testing methanol-fueled diesel vehicles, see §86.137) shall be turned off and the sampler selector valves, including the methanol sampler, placed in the ''standby'' position during this diagnostic period. In addition, either the CVS should be turned off, or the exhaust tube disconnected from the tailpipe during the diagnostic period. If failure to start is an operational error, the vehicle shall be rescheduled for testing from a cold start.

(d) If the engine ''false starts'' the operator shall repeat the recommended starting procedure (such as resetting the choke, etc.).

(e) *Stalling:* (1) If the engine stalls during an idle period, the engine shall be restarted immediately and the test continued. If the engine cannot be started soon enough to allow the vehicle to follow the next acceleration as prescribed, the driving schedule indicator shall be stopped. When the vehicle restarts, the driving schedule indicator shall be reactivated.

(2) If the engine stalls during some operating mode other than idle, the driving schedule indicator shall be stopped, the vehicle shall then be restarted and accelerated to the speed required at that point in the driving schedule and the test continued. During acceleration to this point, shifting shall be performed in accordance with §86.128.

(3) If the vehicle will not restart within one minute, the test shall be voided, the vehicle removed from the dynamometer, corrective action taken, and the vehicle rescheduled for test. The reason for the malfunction (if determined) and the corrective action taken shall be reported to the Administrator.

[54 FR 14530, Apr. 11, 1989, as amended at 58 FR 16042, Mar. 24, 1993; 59 FR 48510, Sept. 21, 1994]

§86.137–90 Dynamometer test run, gaseous and particulate emissions.

(a) *General*—(1) *Gasoline-fueled and methanol-fueled Otto-cycle vehicles.* The vehicle shall be allowed to stand with the engine turned off for a period of not less than 12 hours or more than 36 hours before the cold start exhaust emission test. The cold start exhaust test shall follow the diurnal breathing loss test by not more than one hour. The vehicle shall be stored prior to the

emission test in such a manner that precipitation (*e.g.,* rain or dew) does not occur on the vehicle. The complete dynamometer test consists of a cold start drive of 7.5 miles (12.1 km) and simulates a hot start drive of 7.5 miles (12.1 km). The vehicle is allowed to stand on the dynamometer during the 10 minute time period between the cold and hot start tests. The cold start test is divided into two periods. The first period, representing the cold start ''transient'' phase, terminates at the end of the deceleration which is scheduled to occur at 505 seconds of the driving schedule. The second period, representing the ''stabilized'' phase, consists of the remainder of the driving schedule including engine shutdown. The hot start test, similarly, consists of two periods. The first period, representing the hot start ''transient'' phase, terminates at the same point in driving schedule as the first period of the cold start test. The second period of the hot start test, ''stabilized'' phase, is assumed to be identical to the second period of the cold start test. Therefore, the hot start test terminates after the first period (505 seconds) is run.

(2) *Petroleum-fueled and methanol-fueled diesel vehicles.* The vehicle shall be allowed to stand with the engine turned off for a period of not less than 12 hours or more than 36 hours before the cold start exhaust emission test. The vehicle shall be stored prior to the emission test in such a manner that precipitation (*e.g.,* rain or dew) does not occur on the vehicle. The complete dynamometer test consists of a cold start drive of 7.5 miles (12.1 km), and simulates a hot start drive of 7.5 miles (12.1 km). The vehicle is allowed to stand on the dynamometer during the 10 minute time period between the cold and hot start tests. The cold start test is divided into two periods. The first period, representing the cold start ''transient'' phase, terminates at the end of the deceleration which is scheduled to occur at 505 seconds of the driving schedule. The second period, representing the ''stabilized'' phase, consists of the remainder of the driving schedule including engine shutdown. The hot start test, similarly, consists of two periods. The first period, representing the start of the ''transient'' phase, terminates at the same point in the driving schedule as the first period of the cold start test. The second period of the hot start test, ''stabilized'' phase, is assumed to be identical to the second period of the cold start test. Therefore, the hot start test terminates after the first period (505 seconds) is run.

(b) The following steps shall be taken for each test:

(1) Place drive wheels of vehicle on dynamometer without starting engine.

(2) Open the vehicle engine compartment cover and position the cooling fan.

(3) For all vehicles, with the sample selector valves in the ''standby'' position, connect evacuated sample collection bags to the dilute exhaust and dilution air sample collection systems.

(4) For methanol-fueled vehicles, with the sample selector valves in the ''standby'' position, insert fresh sample collection impingers into the methanol sample collection system, the formaldehyde sample collection system and fresh impingers (or capsules for formaldehyde) into the dilution air sample collection systems for methanol and formaldehyde (may be omitted for 1990 through 1994 model years).

(5) Start the CVS (if not already on), the sample pumps (except the diesel particulate sample pump, if applicable), the temperature recorder, the vehicle cooling fan, and the heated hydrocarbon analysis recorder (diesels only). (The heat exchanger of the constant volume sampler, if used, petroleum-fueled diesel hydrocarbon analyzer continuous sample line and filter, methanol-fueled vehicle hydrocarbon, methanol and formaldehyde sample lines, if applicable, should be preheated to their respective operating temperatures before the test begins.)

(6) Adjust the sample flow rates to the desired flow rate and set the gas flow measuring devices to zero.

(i) For gaseous bag samples (except hydrocarbon samples), the minimum flow rate is 0.17 cfm (0.08 l/sec).

(ii) For hydrocarbon samples, the minimum FID (or HFID in the case of diesel- and methanol-fueled Otto-cycle vehicles) flow rate is 0.066 cfm (0.031 l/sec).

(iii) For methanol samples, the minimum flow rate is 0.14 cfm (0.067 1/sec).

(iv) For formaldehyde samples, the minimum flow rate is 0.036 cfm (0.017 l/s) with capsule collector and 0.14 cfm (0.067 l/s) with impinger.

NOTE: CFV sample flow rate is fixed by the venturi design.

(7) Attach the exhaust tube to the vehicle tailpipe(s).

(8) Carefully install a particulate sample filter into each of the filter holders for diesel vehicle tests. The filters must be handled only with forceps or tongs. Rough or abrasive filter handling will result in erroneous weight determination.

(9) Start the gas flow measuring device, position the sample selector valves to direct the sample flow into the ''transient'' exhaust sample bag, the ''transient'' methanol exhaust sample, the ''transient'' formaldehyde exhaust sample, the ''transient'' dilution air sample bag, the ''transient'' methanol dilution air sample and the ''transient'' formaldehyde dilution air sample (turn on the petroleum-fueled diesel hydrocarbon analyzer system integrator, mark the recorder chart, start particulate sample pump No. 1, and record both gas meter or flow measurement instrument readings, if applicable), turn the key on, and start cranking the engine.

(10) Fifteen seconds after the engine starts, place the transmission in gear.

(11) Twenty seconds after the engine starts, begin the initial vehicle acceleration of the driving schedule.

(12) Operate the vehicle according to the Urban Dynamometer Driving Schedule (§ 86.115).

NOTE: During diesel vehicle testing, adjust the flow rate through the particulate sample probe to maintain a constant value within ±5 percent of the set flow rate. Record the average temperature and pressure at the gas meter or flow instrument inlet. If the set flow rate cannot be maintained because of high particulate loading on the filter, the test shall be terminated. The test shall be rerun using a lower flow rate, or larger diameter filter, or both.

(13) At the end of the deceleration which is scheduled to occur at 505 seconds, simultaneously switch the sample flows from the ''transient'' bags and samples to the ''stabilized'' bags and samples, switch off gas flow measuring device No. 1, switch off the No. 1 petroleum-fueled diesel hydrocarbon integrator and the No. 1 particulate sample pump, mark the petroleum-fueled diesel hydrocarbon recorder chart, and close valves isolating particulate filter No. 1, if applicable, and start gas flow measuring device No. 2, and start the petroleum-fueled diesel hydrocarbon integrator No. 2 and the No. 2 particulate sample pump and open valves isolating particulate filter No. 2, if applicable. Before the acceleration which is scheduled to occur at 510 seconds, record the measured roll or shaft revolutions and reset the counter or switch to a second counter. As soon as possible transfer the ''transient'' exhaust and dilution air samples to the analytical system and process the samples according to § 86.140 obtaining a stabilized reading of the bag exhaust sample on all analyzers within 20 minutes of the end of the sample collection phase of the test. Obtain methanol and formaldehyde sample analyses, if applicable, within 24 hours of the end of the sample collection phase of the test.

(14) Turn the engine off 2 seconds after the end of the last deceleration (at 1,369 seconds).

(15) Five seconds after the engine stops running, simultaneously turn off gas flow measuring device No. 2 and if applicable, turn off the petroleum-fueled diesel hydrocarbon integrator No. 2, mark the hydrocarbon recorder chart, turn off the No. 2 particulate sample pump and close the valves isolating particulate filter No. 2, and position the sample selector valves to the ''standby'' position (and open the valves isolating particulate filter No. 1, if applicable). Record the measured roll or shaft revolutions (both gas meter or flow measurement instrumentation readings), and re-set the counter. As soon as possible, transfer the ''stabilized'' exhaust and dilution air samples to the analytical system and process the samples according to § 86.140, obtaining a stabilized reading of the exhaust bag sample on all analyzers within 20 minutes of the end of the sample collection phase of the test. Obtain methanol and formaldehyde sample analyses, if applicable, within 24 hours of the end of the sample period.

If applicable, carefully remove both pairs of particulate sample filters from their respective holders, and place each in a separate petri dish, and cover.

(16) Immediately after the end of the sample period, turn off the cooling fan and close the engine compartment cover.

(17) Turn off the CVS or disconnect the exhaust tube from the tailpipe(s) of the vehicle.

(18) Repeat the steps in paragraphs (b)(2) through (b)(2) of this section for the hot start test, except only two evacuated sample bags, two methanol sample impingers, two formaldehyde sample impingers, and one pair of particulate sample filters, as appropriate, are required. The step in paragraph (b)(9) of this section shall begin between 9 and 11 minutes after the end of the sample period for the cold start test.

(19) At the end of the deceleration which is scheduled to occur at 505 seconds, simultaneously turn off gas flow measuring device No. 1 (and the petroleum-fueled diesel hydrocarbon integrator No. 1, mark the petroleum-fueled diesel hydrocarbon recorder chart and turn off the No. 1 particulate sample pump, if applicable) and position the sample selector valve to the ''standby'' position. (Engine shutdown is not part of the hot start test sample period.) Record the measured roll or shaft revolutions (and the No. 1 gas meter reading or flow measurement instrument). (Carefully remove the third pair of particulate sample filters from its holder and place in a clean petri dish and cover, if applicable.)

(20) As soon as possible, transfer the hot start ''transient'' exhaust and dilution air samples to the analytical system and process the samples according to § 86.140, obtaining a stabilized reading of the exhaust bag sample on all analyzers within 20 minutes of the end of the sample collection phase of the test. Obtain methanol and formaldehyde sample analyses, if applicable, within 24 hours of the end of the sample period. (If it is not possible to perform analysis on the methanol and formaldehyde samples, within 24 hours, the samples should be stored in a dark cold (4–10 °C) environment until analysis. The samples should be analyzed within fourteen days.)

(21) As soon as possible, and in no case longer than one hour after the end of the hot start phase of the test, transfer the six particulate filters to the weighing chamber for post-test conditioning, if applicable.

(22) Disconnect the exhaust tube from the vehicle tailpipe(s) and drive the vehicle from dynamometer.

(23) The CVS or CFV may be turned off, if desired.

(24) Vehicles to be tested for evaporative emissions will proceed according to § 86.138. For all others this completes the test sequence.

[54 FR 14530, Apr. 11, 1989, as amended at 60 FR 34347, June 30, 1995]

§ 86.137–94 Dynamometer test run, gaseous and particulate emissions.

Section 86.137–94 includes text that specifies requirements that differ from § 86.137–90. Where a paragraph in § 86.137–90 is identical and applicable to § 86.137–94, this may be indicated by specifying the corresponding paragraph and the statement ''[Reserved]. For guidance see § 86.137–90.'' Where a corresponding paragraph of § 86.137–90 is not applicable, this is indicated by the statement ''[Reserved].''

(a) *General.* The dynamometer run consists of two tests, a cold start test, after a minimum 12-hour and a maximum 36-hour soak according to the provisions of § 86.132, and a hot start test following the cold start test by 10 minutes. The vehicle shall be stored prior to the emission test in such a manner that precipitation (*e.g.*, rain or dew) does not occur on the vehicle. The complete dynamometer test consists of a cold start drive of 7.5 miles (12.1 km) and simulates a hot start drive of 7.5 miles (12.1 km). The vehicle is allowed to stand on the dynamometer during the 10 minute time period between the cold and hot start tests. The cold start test is divided into two periods. The first period, representing the cold start ''transient'' phase, terminates at the end of the deceleration which is scheduled to occur at 505 seconds of the driving schedule. The second period, representing the ''stabilized'' phase, consists of the remainder of the driving schedule including engine shutdown.

The hot start test, similarly, consists of two periods. The first period, representing the hot start ''transient'' phase, terminates at the same point in driving schedule as the first period of the cold start test. The second period of the hot start test, ''stabilized'' phase, is assumed to be identical to the second period of the cold start test. Therefore, the hot start test terminates after the first period (505 seconds) is run.

(b) The following steps shall be taken for each test:

(1) Place drive wheels of vehicle on dynamometer without starting engine.

(2) Open the vehicle engine compartment cover and position the cooling fan.

(3) For all vehicles, with the sample selector valves in the ''standby'' position, connect evacuated sample collection bags to the dilute exhaust and dilution air sample collection systems.

(4) For methanol-fueled vehicles, with the sample selector valves in the ''standby'' position, insert fresh sample collection impingers into the methanol sample collection system, fresh impingers or a fresh cartridge into the formaldehyde sample collection system and fresh impingers (or a single cartridge for formaldehyde) into the dilution air sample collection systems for methanol and formaldehyde (background measurements of methanol and formaldehyde may be omitted and concentrations assumed to be zero for calculations in §86.144).

(5) Start the CVS (if not already on), the sample pumps (except the particulate sample pump, if applicable), the temperature recorder, the vehicle cooling fan, and the heated THC analysis recorder (diesel-cycle only). (The heat exchanger of the constant volume sampler, if used, petroleum-fueled diesel-cycle THC analyzer continuous sample line and filter, methanol-fueled vehicle THC, methanol and formaldehyde sample lines, if applicable, should be preheated to their respective operating temperatures before the test begins).

(6) Adjust the sample flow rates to the desired flow rate and set the gas flow measuring devices to zero.

(i) For gaseous bag samples (except THC samples), the minimum flow rate is 0.17 cfm (0.08 l/sec).

(ii) For THC samples, the minimum FID (or HFID in the case of diesel-cycle and methanol-fueled Otto-cycle vehicles) flow rate is 0.066 cfm (0.031 l/sec).

(iii) For methanol samples, the flow rates shall be set such that the system meets the design criteria of §86.109 and §86.110. For samples in which the concentration in the primary impinger exceeds 0.5 mg/l, it is recommended that the mass of methanol collected in the secondary impinger not exceed ten percent of the total mass collected. For samples in which the concentration in the primary impinger does not exceed 0.5 mg/l, analysis of the secondary impingers is not necessary.

(iv) For formaldehyde samples, the flow rates shall be set such that the system meets the design criteria of §86.109 and §86.110. For impinger samples in which the concentration of formaldehyde in the primary impinger exceeds 0.1 mg/l, it is recommended that the mass of formaldehyde collected in the secondary impinger not exceed ten percent of the total mass collected. For samples in which the concentration in the primary impinger does not exceed 0.1 mg/l, analysis of the secondary impingers is not necessary.

(7) Attach the exhaust tube to the vehicle tailpipe(s).

(8) Carefully install a particulate sample filter into each of the filter holders. The filters must be handled only with forceps or tongs. Rough or abrasive filter handling will result in erroneous weight determination.

(9) Start the gas flow measuring device, position the sample selector valves to direct the sample flow into the ''transient'' exhaust sample bag, the ''transient'' methanol exhaust sample, the ''transient'' formaldehyde exhaust sample, the ''transient'' dilution air sample bag, the ''transient'' methanol dilution air sample and the ''transient'' formaldehyde dilution air sample (turn on the petroleum-fueled diesel-cycle THC analyzer system integrator, mark the recorder chart, start particulate sample pump No. 1, and record both gas meter or flow measurement instrument readings, if applicable), turn the key on, and start cranking the engine.

(10) Fifteen seconds after the engine starts, place the transmission in gear.

(11) Twenty seconds after the engine starts, begin the initial vehicle acceleration of the driving schedule.

(12) Operate the vehicle according to the Urban Dynamometer Driving Schedule (§ 86.115).

NOTE: During particulate testing, adjust the flow rate through the particulate sample probe to maintain a constant value within ±5 percent of the set flow rate. Record the average temperature and pressure at the gas meter or flow instrument inlet. If the set flow rate cannot be maintained because of high particulate loading on the filter, the test shall be terminated. The test shall be rerun using a lower flow rate, or larger diameter filter, or both.

(13) At the end of the deceleration which is scheduled to occur at 505 seconds, simultaneously switch the sample flows from the ''transient'' bags and samples to the ''stabilized'' bags and samples, switch off gas flow measuring device No. 1, switch off the No. 1 petroleum-fueled diesel hydrocarbon integrator and the No. 1 particulate sample pump, mark the petroleum-fueled diesel hydrocarbon recorder chart, and close valves isolating particulate filter No. 1, if applicable, start gas flow measuring device No. 2, and start the petroleum-fueled diesel hydrocarbon integrator No. 2 and the No. 2 particulate sample pump and open valves isolating particulate filter No. 2, if applicable. Before the acceleration which is scheduled to occur at 510 seconds, record the measured roll or shaft revolutions and reset the counter or switch to a second counter. As soon as possible transfer the ''transient'' exhaust and dilution air samples to the analytical system and process the samples according to § 86.140 obtaining a stabilized reading of the bag exhaust sample on all analyzers within 20 minutes of the end of the sample collection phase of the test. Obtain methanol and formaldehyde sample analyses, if applicable, within 24 hours of the end of the sample collection phase of the test.

(14) Turn the engine off 2 seconds after the end of the last deceleration (at 1,369 seconds).

(15) Five seconds after the engine stops running, simultaneously turn off gas flow measuring device No. 2 and if applicable, turn off the hydrocarbon integrator No. 2, mark the hydrocarbon recorder chart, turn off the No. 2 particulate sample pump and close the valves isolating particulate filter No. 2, and position the sample selector valves to the ''standby'' position (and open the valves isolating particulate filter No. 1, if applicable). Record the measured roll or shaft revolutions (both gas meter or flow measurement instrumentation readings), and reset the counter. As soon as possible, transfer the ''stabilized'' exhaust and dilution air samples to the analytical system and process the samples according to § 86.140, obtaining a stabilized reading of the exhaust bag sample on all analyzers within 20 minutes of the end of the sample collection phase of the test. Obtain methanol and formaldehyde sample analyses, if applicable, within 24 hours of the end of the sample period. (If it is not possible to perform analysis on the methanol and formaldehyde samples within 24 hours, the samples should be stored in a dark cold (4–10 °C) environment until analysis. The samples should be analyzed within fourteen days.) If applicable, carefully remove both pairs of particulate sample filters from their respective holders, and place each in a separate petri dish, and cover.

(b)(16) through (b)(24) [Reserved]. For guidance see § 86.137–90.

[56 FR 25776, June 5, 1991, as amended at 60 FR 34347, June 30, 1995]

§ 86.137–96 Dynamometer test run, gaseous and particulate emissions.

Section 86.137–96 includes text that specifies requirements that differ from those specified in §§ 86.137–90 and 86.137–94. Where a paragraph in § 86.137–90 or § 86.137–94 is identical and applicable to § 86.137–96, this may be indicated by specifying the corresponding paragraph and the statement ''[Reserved]. For guidance see § 86.137–90.'' or ''[Reserved]. For guidance see § 86.137–94.''

(a) through (b)(15) [Reserved]. For guidance see § 86.137–94.

(b)(16) through (b)(23) [Reserved]. For guidance see § 86.137–90.

(b)(24) Vehicles to be tested for evaporative emissions will proceed according to § 86.134; vehicles to be tested with the supplemental two-diurnal test sequence for evaporative emissions will proceed according to § 86.138–96(k). For

all others this completes the test sequence.

[58 FR 16042, Mar. 24, 1993]

§86.138–90 Hot-soak test.

The hot-soak evaporative emission test shall be conducted immediately following the hot transient exhaust emission test.

(a) Prior to the completion of the hot-start transient exhaust emission sampling period, the evaporative emission enclosure shall be purged for several minutes.

(b) The enclosure doors shall be closed and sealed within two minutes of engine shutdown and within seven minutes after the end of the exhaust emission test. The steps after the end of the driving cycle should be done as quickly as possible to minimize the time needed to start the hot soak test.

(c) Fresh impingers shall be installed in the methanol sample collection system immediately prior to the start of the test, if applicable.

(d) If not already on, the evaporative enclosure mixing fan shall be turned on at this time.

(e) Upon completion of the hot transient exhaust emission sampling period, the vehicle engine compartment cover shall be closed, the cooling fan shall be moved, the vehicle shall be disconnected from the dynamometer and exhaust sampling system, and then driven at minimum throttle to the vehicle entrance of the enclosure.

(f) The vehicle's engine must be stopped before any part of the vehicle enters the enclosure. The vehicle may be pushed or coasted into the enclosure.

(g) The test vehicle windows and luggage compartments shall be opened, if not already open.

(h) The temperature recording system shall be started and the time of engine shut off shall be noted on the evaporative emission hydrocarbon recording system.

(i) The enclosure doors shall be closed and sealed within two minutes of engine shutdown and within five minutes after the end of the exhaust emission test.

(j) The 60±0.5 minute hot soak begins when the enclosure doors are sealed. The enclosure atmosphere shall be analyzed for hydrocarbon and recorded. This is initial (time = 0 minutes) hydrocarbon concentration, C_{HCi}, for use in calculating evaporative losses, see §86.143. The ''zero'' time methanol sample shall be collected starting at the same time as the hydrocarbon analysis is started. Sampling should continue for four minutes.

(k) The test vehicle shall be permitted to soak for a period of one hour in the enclosure.

(l) The FID (or HFID) hydrocarbon analyzer shall be zeroed and spanned immediately prior to the end of the test.

(m) Fresh impingers shall be installed in the methanol collection system immediately prior to the end of the test, if applicable.

(n) At the end of the 60±0.5 minute test period, again analyze the enclosure atmosphere for hydrocarbons and methanol, as described in §86.138–90(j), and record time. These analyses provide the final (time = 60 minutes) hydrocarbon concentration, C_{HCf}, and the final methanol level for use in calculating evaporative losses, see §86.143. This operation completes the evaporative emission measurement procedure.

(o) *Alternate method for methanol sampling.* Since sample times of longer than four minutes may be necessary in order to collect an adequate and representative sample of methanol at the end of a test (when SHED concentrations are usually increasing rapidly), it may be necessary to rapidly collect the methanol sample in a bag and then bubble the bag sample through the impingers at the specified flow rate. The time elapsed between collection of the bag sample and flowing through the impingers should be minimized in order to prevent any losses. This alternative must be adopted if the four minute sample period is inadequate to collect a sample of sufficient concentration to allow accurate GC analysis.

[54 FR 14532, Apr. 11, 1989, as amended at 58 FR 16042, Mar. 24, 1993; 60 FR 43897, Aug. 23, 1995]

§86.138–96 Hot soak test.

(a)(1) *Gasoline- and methanol-fueled vehicles.* For gasoline- and methanol-

fueled vehicles, the hot soak test shall be conducted immediately following the running loss test. However, sampling of emissions from the running loss test is not required as preparation for the hot soak test.

(2) *Gaseous-fueled vehicles.* Since gaseous-fueled vehicles are not required to perform a running loss test, the hot soak test shall be conducted within seven minutes after completion of the hot start exhaust test.

(b) The hot soak test may be conducted in the running loss enclosure as a continuation of that test or in a separate enclosure.

(1) If the hot soak test is conducted in the running loss enclosure, the driver may exit the enclosure after the running loss test. If exiting, the driver should use the personnel door described in § 86.107–96(a)(2), exiting as quickly as possible with a minimum disturbance to the system. The final hydrocarbon and methanol concentration for the running loss test, measured in § 86.134–96(g)(1)(xx), shall be the initial hydrocarbon and methanol concentration (time=0 minutes) C_{HCi} and C_{CH_3OHi}, for the hot soak test.

(2) If the vehicle must be moved to a different enclosure, the following steps must be taken:

(i) The enclosure for the hot soak test shall be purged for several minutes prior to completion of the running loss test. WARNING: If at any time the concentration of hydrocarbons, of methanol, or of methanol and hydrocarbons exceeds 15,000 ppm C the enclosure should be immediately purged. This concentration provides at least a 4:1 safety factor against the lean flammability limit.

(ii) The FID hydrocarbon analyzer shall be zeroed and spanned immediately prior to the test.

(iii) Fresh impingers shall be installed in the methanol sample collection system immediately prior to the start of the test, if applicable.

(iv) If not already on, the mixing fan(s) shall be turned on at this time. Throughout the hot soak test, the mixing fan(s) shall circulate the air at a rate of 0.8±0.2 cfm per cubic foot of the nominal enclosure volume.

(v) Begin sampling as follows:

(A) Analyze the enclosure atmosphere for hydrocarbons and record. This is the initial (time = 0 minutes) hydrocarbon concentration, C_{HCi}, required in § 86.143. Hydrocarbon emissions may be sampled continuously during the test period.

(B) Analyze the enclosure atmosphere for methanol, if applicable, and record. The methanol sampling must start simultaneously with the initiation of the hydrocarbon analysis and continue for 4.0±0.5 minutes. This is the initial (time=0 minutes) methanol concentration, C_{CH_3OHi}, required in § 86.143. Record the time elapsed during this analysis. If the 4-minute sample period is inadequate to collect a sample of sufficient concentration to allow accurate GC analysis, rapidly collect the methanol sample in a bag and then bubble the bag sample through the impingers at the specified flow rate. The time elapsed between collection of the bag sample and flow through the impingers should be minimized to prevent any losses.

(vi) The vehicle engine compartment cover shall be closed (if not already closed), the cooling fan shall be moved, the vehicle shall be disconnected from the dynamometer and any sampling system, and then driven at minimum throttle to the enclosure for the hot soak test. These steps should be done as quickly as possible to minimize the time needed to start the hot soak test.

(vii) The vehicle's engine must be stopped before any part of the vehicle enters the enclosure.

(viii) The vehicle shall enter the enclosure; the enclosure doors shall be closed and sealed within 2 minutes of engine shutdown and within seven minutes after the end of the running loss test.

(ix) The test vehicle windows and any luggage compartments shall be opened (if not already open). The vehicle engine compartment cover shall be closed (if not already closed).

(c) [Reserved]

(d) The temperature recording system shall be started and the time of engine shutoff shall be noted on the evaporative emission hydrocarbon data recording system.

(e) For the first 5 minutes of the hot soak test, the ambient temperature

shall be maintained at 95±10 °F. For the remainder of the hot soak test, the ambient temperature shall be maintained at 95±5 °F (95±2 °F on average).

(f) The 60±0.5 minute hot soak begins when the enclosure doors are sealed (or when the running loss test ends, if the hot soak test is conducted in the running loss enclosure).

(g) The FID (or HFID) hydrocarbon analyzer shall be zeroed and spanned immediately prior to the end of the test.

(h) Fresh impingers shall be installed in the methanol collection system immediately prior to the end of the test, if applicable.

(i) [Reserved]

(j) At the end of the 60±0.5 minute test period:

(1) Analyze the enclosure atmosphere for hydrocarbons and record. This is the final (time=60 minutes) hydrocarbon concentration, C_{HCf}, required in §86.143.

(2) Analyze the enclosure atmosphere for methanol and record, if applicable. The methanol sampling must start simultaneously with the initiation of the hydrocarbon analysis and continue for 4.0±0.5 minutes. This is the final (time=60 minutes) methanol concentration, C_{CH_3OHf}, required in §86.143. Record the time elapsed during this analysis. If the 4-minute sample period is inadequate to collect a sample of sufficient concentration to allow accurate GC analysis, rapidly collect the methanol sample in a bag and then bubble the bag sample through the impingers at the specified flow rate. The time elapsed between collection of the bag sample and flow through the impingers should be minimized to prevent any losses.

(k) For the supplemental two-diurnal test sequence (see §86.130–96), the hot soak test described in §86.138–90 shall be conducted immediately following the hot transient exhaust emission test. This test requires ambient temperatures between 68° and 86 °F at all times. The equipment and calibration specifications of §§86.107–90 and 86.117–90 may apply for this testing. Enclosures meeting the requirements of §§86.107–96 and 86.117–96 may also be used. This hot soak test is followed by two consecutive diurnal heat builds, described in §86.133–96(p).

(l) If the vehicle is to be tested for diurnal emissions, follow the procedure outlined in §86.133–96.

[58 FR 16042, Mar. 24, 1993, as amended at 59 FR 48510, Sept. 21, 1994; 60 FR 43897, Aug. 23, 1995]

§86.139–90 Particulate filter handling and weighing.

(a) At least 8 hours, but not more than 56 hours before the test, place each filter in an open, but protected, petri dish and place in the weighing chamber which meets the humidity and temperature specifications of §86.112.

(b) At the end of the 8 to 56 hour stabilization period, weigh the filter on a balance having a precision of one microgram. Record this weight. This reading is the tare weight.

(c) The filter shall then be stored in a covered petri dish which shall remain in the weighing chamber until needed for testing.

(d)(1) If the filter is not used within one hour of its removal from the weighing chamber, it shall be reweighed.

(2) The one hour limit may be replaced by an eight-hour limit if one or both of the following conditions are met:

(i) A stabilized filter is placed and kept in a sealed filter holder assembly with the ends plugged, or

(ii) A stabilized filter is placed in a sealed filter holder assembly, which is then immediately placed in a sample line through which there is no flow.

(e) After the test, and after the sample filter is returned to the weighing room, condition it for at least 1 hour but not more than 56 hours. Then weigh a second time. This latter reading is the gross weight of the filter. Record this weight.

(f) The net weight (P_e) is the gross weight minus the tare weight.

NOTE: Should the sample on the filter contact the petri dish or any other surface, the test is void and must be rerun.

[54 FR 14532, Apr. 11, 1989]

§ 86.140–82 Exhaust sample analysis.

The following sequence of operations shall be performed in conjunction with each series of measurement Y:

(a) For CO, CO_2, NO_X and gasoline HC:

(1) Zero the analyzers and obtain a stable zero reading. Recheck after tests.

(2) Introduce span gases and set instrument gains. In order to avoid errors, span and calibrate at the same flow rates used to analyze the test sample. Span gases should have concentrations equal to 75 to 100 percent of full scale. If gain has shifted significantly on the analyzers, check the calibrations. Show actual concentrations on chart.

(3) Check zeros; repeat the procedure in paragraphs (a) (1) and (2) of this section if required.

(4) Check flow rates and pressures.

(5) Measure HC, CO, CO_2 and NO_X concentrations of samples.

(6) Check zero and span points. If difference is greater than 2 percent of full scale, repeat the procedure in paragraphs (a) (1) through (5) of this section.

(b) For diesel HC:

(1) Zero HFID analyzer and obtain a stable zero reading.

(2) Introduce span gas and set instrument gains. Span gas should have concentration equal to 75 to 100 percent of full scale.

(3) Check zero as in paragraph (b)(1) of this section.

(4) Introduction of zero and span gas into the analyzer can be accomplished by either of the following methods:

(i) Close heated valve in HC sample (see Figures B82–3 or B82–4), and allow gases to enter HFID. Extreme care should be taken not to introduce gases under high pressure.

(ii) Connect zero and span line directly to HC sample probe and introduce gases at a flow rate greater than 125 percent of the HFID flow rate with the CVS blower operating (see figures B82–3A or B82–4A). Excess flow must be allowed to exit probe inlet.

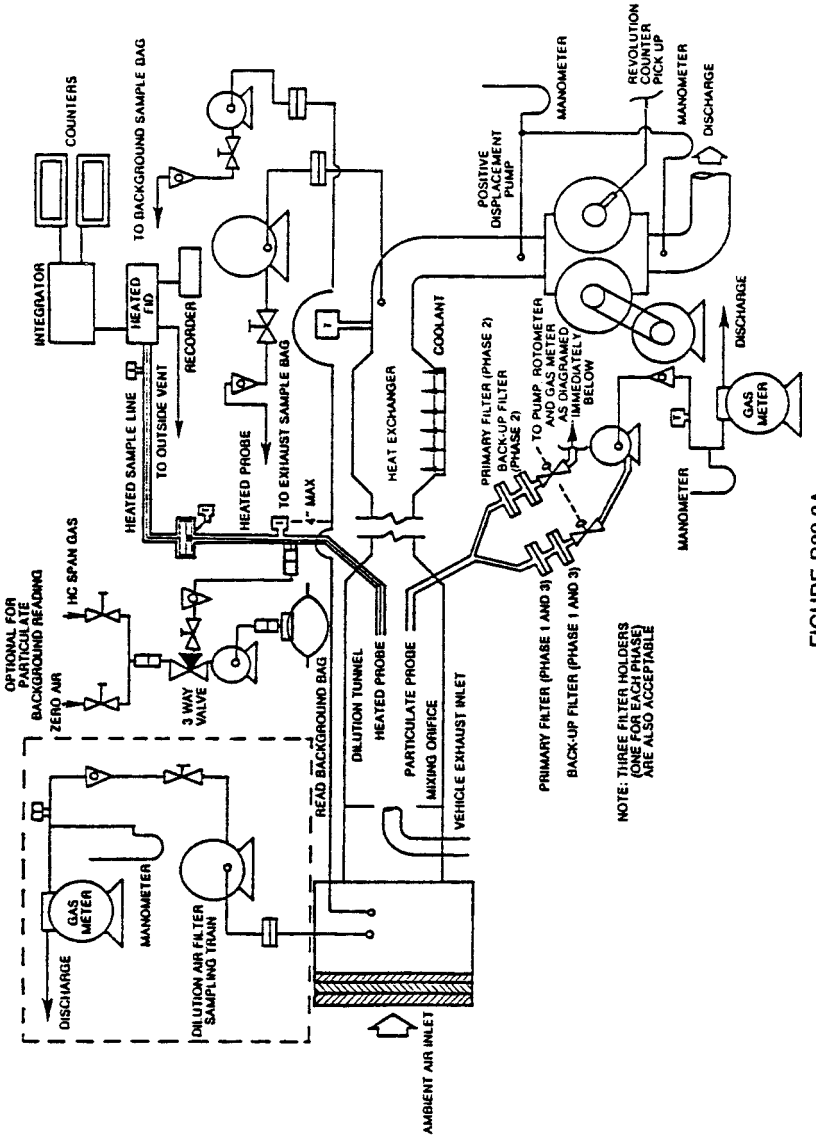

FIGURE B82-3A
GASEOUS AND PARTICULATE EMISSIONS SAMPLING SYSTEM (PDP-CVS)
(FOR DIESEL VEHICLES ONLY)

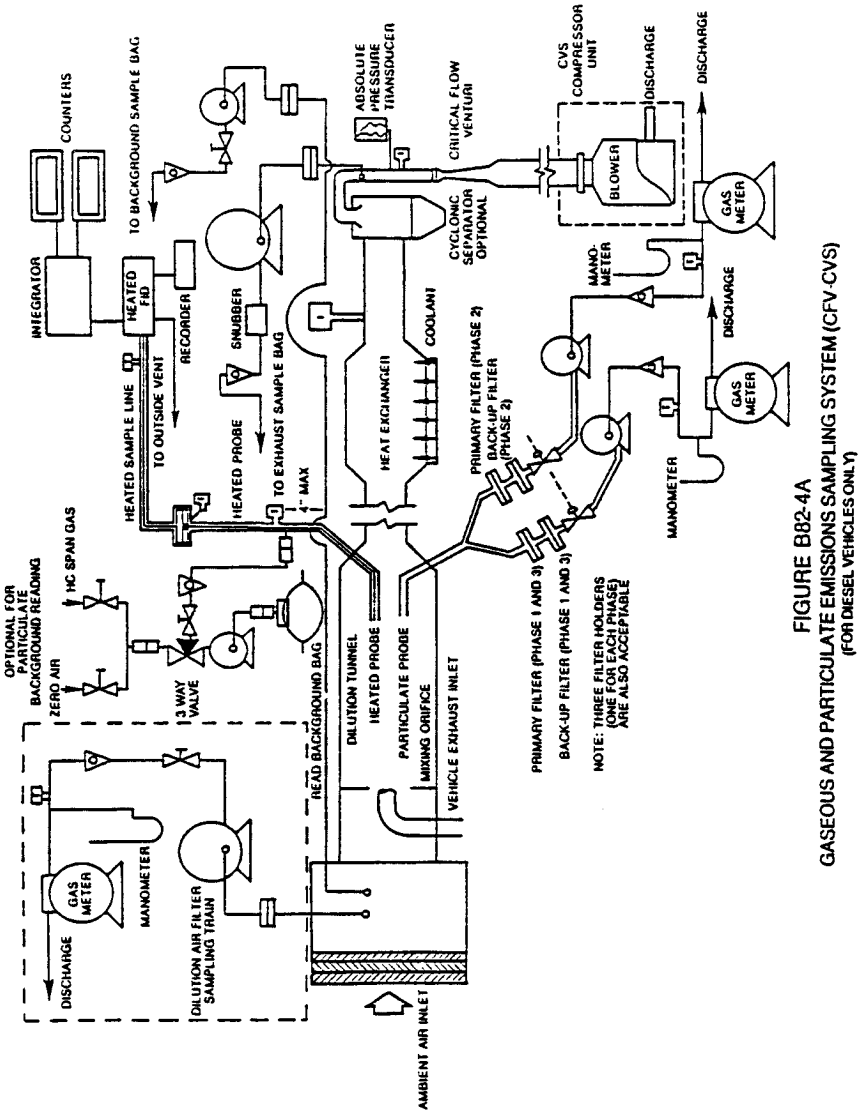

FIGURE B82-4A
GASEOUS AND PARTICULATE EMISSIONS SAMPLING SYSTEM (CFV-CVS)
(FOR DIESEL VEHICLES ONLY)

NOTE: In order to minimize errors, HFID flow rate and pressure during zero and span (and background bag reading) must be exactly the same as that used during testing.

(5) Continuously record (integrate electronically if desired) dilute hydrocarbon emissions levels during test. Background samples are collected in sample bags and analyzed as in paragraph (4)(i) or (4)(ii) of this section.

(6) Check zero and span as in paragraph (b)(1) through (b)(4)(i) or (4)(ii) of this section. If difference is greater than 2 percent of full scale, void test

and check for HC ''hangup'' or electronic drift in analyzer.

[45 FR 14520, Mar. 5, 1980, as amended at 54 FR 2122, Jan. 19, 1989]

§86.140–90 Exhaust sample analysis.

The following sequence of operations shall be performed in conjunction with each series of measurements:

(a) For CO, CO_2, NO_X, and for Otto-cycle and methanol-fueled diesel vehicle HC:

(1) Zero the analyzers and obtain a stable zero reading. Recheck after tests.

(2) Introduce span gases and set instrument gains. In order to avoid errors, span and calibrate at the same flow rates used to analyze the test sample. Span gases should have concentrations equal to 75 to 100 percent of full scale. If gain has shifted significantly on the analyzers, check the calibrations. Show actual concentrations on chart.

(3) Check zeroes; repeat the procedure in paragraphs (1) and (2) of this section if required.

(4) Check flow rates and pressures.

(5) Measure HC, CO, CO_2, and NO_X concentrations of samples.

(6) Check zero and span points. If difference is greater than 2 percent of full scale, repeat the procedure in paragraphs (a) (1) through (5) of this section.

(b) For petroleum-fueled diesel vehicle HC:

(1) Zero HFID analyzer and obtain a stable zero reading.

(2) Introduce span gas and set instrument gains. Span gas should have concentration equal to 75 to 100 percent of full scale.

(3) Check zero as in (b)(1) of this section.

(4) Introduction of zero and span gas into the analyzer can be accomplished by either of the following methods:

(i) Close heated valve in HC sample (see Figures B90–5 or B90–6), and allow gases to enter HFID. Extreme care should be taken not to introduce gases under high pressure.

(ii) Connect zero and span line directly to HC sample probe and introduce gases at a flow rate greater than 125 percent of the HFID flow rate with the CVS blower operating (see Figures B90–5 or B90–6). Excess flow must be allowed to exit probe inlet.

NOTE: In order to minimize errors, HFID flow rate and pressure during zero and span (and background bag reading) must be exactly the same as that used during testing.

(5) Continuously record (integrate electronically if desired) dilute hydrocarbon emissions levels during test. Background samples are collected in sample bags and analyzed as in paragraphs (b)(4) (i) or (ii) of this section.

(6) Check zero and span as in paragraphs (b)(1) through (b)(4) (i) or (ii) of this section. If difference is greater than 2 percent of full scale, void test and check for HC ''hangup'' or electronic drift in analyzer.

(c) For CH_30H (methanol-fueled vehicles):

(1) Introduce a reference sample of methanol (the concentration of methanol in deionized water is known and is C_{MR} in the calculations) into the gas chromatograph and measure the area of the response peak This reference sample peak area is A_{MR} in the calculations.

(2) Introduce test samples into the gas chromatograph and measure the area of the response peak. This peak area is A_{MS} in the calculations.

(d) For HCHO (methanol-fueled vehicles):

(1) Introduce a reference sample of formaldehyde (the concentration of formaldehyde as a dinitrophenylhydrazine derivative in acetonitrile is known (C_{FR})) into the high pressure liquid chromatograph (HPLC) and measure the area of the response peak. This reference sample peak area is A_{FR} in the calculations.

(2) Introduce test samples into the high pressure liquid chromatograph and measure the area of the responses peak. This peak area is A_{FS} in the calculations.

[54 FR 14533, Apr. 11, 1989]

§86.140–94 Exhaust sample analysis.

The following sequence shall be performed in conjunction with each series of measurements:

(a) For CO, CO_2, CH_4, NO_X, and for Otto-cycle and methanol-fueled, natural gas-fueled and liquefied petroleum

gas-fueled (if non-heated FID option is used) diesel vehicle HC:

(1) Zero the analyzers and obtain a stable zero reading. Recheck after tests.

(2) Introduce span gases and set instrument gains. In order to avoid errors, span and calibrate at the same flow rates used to analyze the test sample. Span gases should have concentrations equal to 75 to 100 percent of full scale. If gain has shifted significantly on the analyzers, check the calibrations. Show actual concentrations on chart.

(3) Check zeroes; repeat the procedure in paragraphs (a) (1) and (2) of this section if required.

(4) Check flow rates and pressures.

(5) Measure THC, CO, CO_2, CH_4, and NO_X concentrations of samples.

(6) Check zero and span points. If difference is greater than 2 percent of full scale, repeat the procedure in paragraphs (a) (1) through (5) of this section.

(b) For petroleum-fueled, natural gas-fueled and liquefied petroleum gas-fueled (if HFID is used) diesel vehicle HC:

(1) Zero HFID analyzer and obtain a stable zero reading.

(2) Introduce span gas and set instrument gains. Span gas should have concentration equal to 75 to 100 percent of full scale.

(3) Check zero as in paragraph (b)(1) of this section.

(4) Introduction of zero and span gas into the analyzer can be accomplished by either of the following methods:

(i) Close heated valve in THC sample (see Figures B94–5 or B94–6) and allow gases to enter HFID. Extreme care should be taken not to introduce gases under high pressure.

(ii) Connect zero and span line directly to THC sample probe and introduce gases at a flow rate greater than 125 percent of the HFID flow rate with the CVS blower operating (see Figures B94–5 or B94–6). Excess flow must be allowed to exit probe inlet.

NOTE: In order to minimize errors, HFID flow rate and pressure during zero and span (and background bag reading) must be exactly the same as that used during testing.

(5) Continuously record (integrate electronically if desired) dilute THC emission levels during test. Background samples are collected in sample bags and analyzed as in paragraphs (b)(4) (i) or (ii) of this section.

(6) Check zero and span as in paragraphs (b) (1) through (4) of this section. If difference is greater than 2 percent of full scale, void test and check for THC ''hangup'' or electronic drift in analyzer.

(c) For CH_3OH (methanol-fueled vehicles), introduce test samples into the gas chromatograph and measure the concentration. This concentration is C_{MS} in the calculations.

(d) For HCHO (methanol-fueled vehicles), introduce formaldehyde test samples into the high pressure liquid chromatograph and measure the concentration of formaldehyde as a dinitrophenylhydrazine derivative in acetonitrile. This concentration is C_{FS} in the calculations.

(e) For CH_4 analysis:

(1) In the event that the procedure results in negative $NMHC_{wm}$ values (as may occur with high methane fractions), any negative $NMHC_{wm}$ value whose absolute value is less than 10 percent of the NMHC standard shall be rounded to zero. Negative $NMHC_{wm}$ values whose absolute value is more than 10 percent of the NMHC standard shall require sample remeasurement. If the 10 percent criterion cannot be met after remeasurement, the test will be void.

(2) Other sampling procedures may be used if shown to yield equivalent or superior results and if approved in advance by the Administrator.

[56 FR 25777, June 5, 1991, as amended at 59 FR 48510, Sept. 21, 1994; 60 FR 34347, June 30, 1995]

§ 86.142–90 Records required.

The following information shall be recorded with respect to each test:

(a) Test number.

(b) System or device tested (brief description).

(c) Date and time of day for each part of the test schedule.

(d) Test results.

(e) Driver and equipment operator IDs.

(f) Vehicle: ID number, manufacturer, model year, standards, engine family, evaporative emissions family,

basic engine description (including displacement, number of cylinders, turbo-/supercharger used, and catalyst usage), fuel system (including number of carburetors, number of carburetor barrels, fuel injection type, and fuel tank(s) capacity and location), engine code, gross vehicle weight rating, inertia weight class, actual curb weight at zero miles, actual road load at 50 mph (80 kph), transmission configuration, axle ratio, car line, system miles, idle rpm, and drive wheel tire pressure, as applicable.

(g) Dynamometer: Dynamometer ID, inertia weight setting, indicated power absorption setting, records to verify compliance with the vehicle speed versus time requirements of the test, and driving distance for each of the three phases of the test, calculated from the measured roll or shaft revolutions.

(h) Gas analyzers: Analyzer bench ID, analyzer ranges, recordings of analyzer output during zero, span, and sample readings.

(i) Recorder charts: Test number, date, vehicle ID, operator ID, and identification of the measurements recorded.

(j) Test cell barometric pressure, ambient temperature, and humidity.

NOTE: A central laboratory barometer may be used: *Provided,* that individual test cell barometric pressures are shown to be within ±0.1 percent of the barometric pressure at the central barometer location.

(k) Temperatures: Records to verify compliance with the ambient temperature requirements throughout the test procedure and recordings of vehicle fuel temperature(s) during the diurnal test and of the enclosure temperatures during the diurnal and hot soak tests.

(l) CFV–CVS: Total dilute exhaust volume (Vmix) for each phase of the exhaust test.

(m) PDP–CVS: Test measurements required to calculate the Vmix. Total dilute exhaust volume (Vmix) for each phase of the exhaust test.

(n) The humidity of the dilution air.

NOTE: If conditioning columns are not used (see §§86.122 and 86.144) this measurement can be deleted. If the conditioning columns are used and the dilution air is taken from the test cell, the ambient humidity can be used for this measurement.

(o) Additional records required for diesel vehicles: (1) Pressure and temperature of the dilute exhaust mixture (and background air if sampled) at the inlet to the gas meter used for particulate sampling.

(2) The temperature of the dilute exhaust mixture inside the dilution tunnel near the inlet of the particulate probe.

(3) The temperature of the gas flowing in the heated sample line before the heated filter, and also before the HFID, and the temperature of the control system of the heated hydrocarbon detector.

(4) Gas meter or flow measurement instrumentation readings at the start of each sample period and at the end of each sample period.

(5) The stabilized pre-test weight and post-test weight of each particulate sample and back-up filter.

(6) Continuous temperature and humidity recording of the ambient air in which the particulate filters were stabilized.

(p) Additional required records for methanol-fueled vehicles:

(1) Specification of the methanol-fuel or methanol-fuel mixtures used during the test.

(2) Volume of sample passed through the methanol sampling system and the volume of deionized water in each impinger.

(3) The concentration of the GC analyses of the test samples (methanol).

(4) Volume of sample passed through the formaldehyde sampling system and the volume of DNPH solution used.

(5) The concentration of the HPLC analysis of the test sample (formaldehyde).

(6) The temperatures of the sample lines before the HFID and the impinger, the temperature of the exhaust transfer duct (as applicable), and the temperature of the control system of the heated hydrocarbon detector.

(7) A continuous measurement of the dew point of the raw and diluted exhaust. This requirement may be omitted if the temperatures of all heated lines are kept above 220 °F, or if the manufacturer performs an engineering analysis demonstrating that the temperature of the heated systems remains above the maximum dew point of the

gas stream throughout the course of the test.

(q) *Additional required records for natural gas-fueled vehicles.* Composition, including all carbon containing compounds; e.g. CO_2, of the natural gas-fuel used during the test. C_1 and C_2 compounds shall be individually reported. C_3 and heavier hydrocarbons, and C_6 and heavier compounds may be reported as a group.

(r) *Additional required records for liquefied petroleum gas-fueled vehicles.* Composition of the liquefied petroleum gas-fuel used during the test. Each hydrocarbon compound present, through C_4 compounds, shall be individually reported. C_5 and heavier hydrocarbons may be reported as a group.

[54 FR 14533, Apr. 11, 1989, as amended at 58 FR 58422, Nov. 1, 1993; 59 FR 48510, Sept. 21, 1994; 60 FR 34348, June 30, 1995]

§ 86.143–90 Calculations; evaporative emissions.

(a) The calculation of the net hydrocarbon, methanol and hydrocarbon plus methanol (total hydrocarbon equivalent) mass change in the enclosure is used to determine the diurnal and hot soak mass emissions. The mass changes are calculated from initial and final hydrocarbon and methanol concentrations in ppm carbon, initial and final enclosure ambient temperatures, initial and final barometric pressures, and net enclosure volume using the following equations:

(1) For methanol:

$$M_{CH3OH} = V_n X \times \frac{T_{Ef}}{\left(V_{Ef} \times T_{SHEDf}\right)} \times \left[\left(C_{MS1f} \times AV_{1f}\right) + \left(C_{MS2f} \times AV_{2f}\right)\right] - \frac{T_{Ei}}{\left(V_{Ei} \times T_{SHEDi}\right)} \times \left[\left(C_{MS1i} \times AV_{1i}\right) + \left(C_{MS2i} \times AV_{2i}\right)\right]$$

Where:

(i) M_{CH3OH} = Methanol mass change, μ g.

(ii) V_n = Net enclosure volume, ft^3, as determined by subtracting 50 ft^3 (1.42 m^3) (volume of vehicle with trunk and windows open) from the enclosure volume. A manufacturer may use the measured volume of the vehicle (instead of the nominal 50 ft^3) with advance approval by the Administrator: *Provided,* the measured volume is determined and used for all vehicles tested by that manufacturer.

(iii) T_E = Temperature of sample withdrawn, °R.

(iv) V_E = Volume of sample withdrawn, ft^3.

(v) T_{SHED} = Temperature of SHED, °R

(vi) C_{MS} = GC concentration of sample, μ g/ml.

(vii) AV = Volume of absorbing reagent in impinger.

(viii) P_B = Barometric pressure at time of sampling, in. Hg.

(ix) i = Initial sample.

(x) f = Final sample.

(xi) 1 = First impinger.

(xii) 2 = Second impinger.

(2) For hydrocarbons:

$$M_{HC} = \left(kV_n \times 10^{-4}\right)\left[\frac{\left(C_{HCf} - rC_{CH3OHf}\right)P_{Bf}}{T_f} - \frac{\left(C_{HCi} - rC_{CH3OHi}\right)P_{Bi}}{T_i}\right]$$

Where:

(i) M_{HC}=Hydrocarbon mass change, g.

(ii) C_{HC}=FID hydrocarbon concentration as ppm carbon including FID response to methanol in the sample.

(iii) C_{CH3OH} = Methanol concentration as ppm carbon.

$$= \frac{1.501 \times 10^{-3} \times T}{P_B \times V_E} \times \left[\left(C_{S1} \times AV_1 \right) + \left(C_{S2} \times AV_2 \right) \right]$$

(iv) V_n=Net enclosure volume ft³ (m³), as determined by subtracting 50 ft³ (1.42 m³) (volume of vehicle with trunk and windows open) from the enclosure volume. A manufacturer may use the measured volume of the vehicle (instead of the nominal 50 ft³) with advance approval by the Administrator: *Provided,* the measured volume is determined and used for all vehicles tested by that manufacturer.

(v) r=FID response factor to methanol.

(vi) P_B=Barometric pressure, in Hg (kPa).

(vii) T=Enclosure temperature, °R(°K).

(viii) i=initial reading.

(ix) f=final reading.

(x) 1=First impinger.

(xi) 2=Second impinger.

(xii)(A) k=0.208 (12+H/C).

(B) *For SI units,* k=1.2 (12+H/C).

Where:

(xiii) H/C=hydrogen-carbon ratio.

(A) H/C=2.33 for diurnal emissions.

(B) H/C=2.2 for hot soak emissions.

(3) For total evaporative emissions:

Total Evaporative Emissions=Total Diurnal Emissions+Total Hot Soak Emissions

$$= \left(M_{HC} + \frac{14.3594}{32.042} \times 10^6 M_{CH3OH} \right) + \left(M_{HC} + \frac{14.2284}{32.042} \times 10^6 M_{CH3OH} \right), g$$

(b) The final reported results shall be computed by summing the individual evaporative emission results determined for the diurnal breathing-loss test, running-loss test and the hot-soak test.

[54 FR 14534, Apr. 11, 1989, as amended at 60 FR 34348, June 30, 1995]

§ 86.143–96 Calculations; evaporative emissions.

(a) The following equations are used to calculate the evaporative emissions from gasoline- and methanol-fueled vehicles, and for gaseous-fueled vehicles.

(b) Use the measurements of initial and final concentrations to determine the mass of hydrocarbons and methanol emitted. For testing with pure gasoline, methanol emissions are assumed to be zero.

(1) For enclosure testing of diurnal, hot soak, and running loss emissions:

(i) Methanol emissions:

$$M_{CH_3OH} = V_n \times \left[\frac{\left(C_{MS1f} \times AV_{1f} \right) + \left(C_{MS2f} \times AV_{2f} \right)}{V_{E_f}} \right] - \left[\frac{\left(C_{MS1i} \times AV_{1i} \right) + \left(C_{MS2i} \times AV_{2i} \right)}{V_{E_i}} \right] + \left(M_{CH_3OH,out} - M_{CH_3OH,in} \right)$$

Where:

(A) M_{CH3OH} = Methanol mass change, μ g.

(B) V_n = Net enclosure volume, ft³, as determined by subtracting 50 ft³ (1.42 m³) (volume of vehicle with trunk and windows open) from the enclosure volume. A manufacturer may use the measured volume of the vehicle (instead of the nominal 50 ft³) with advance approval by the Administrator: *Provided*, the measured volume is determined and used for all vehicles tested by that manufacturer.

(C) [Reserved].

(D) V_E=Volume of sample withdrawn, ft³. Sample volumes must be corrected for differences in temperature to be consistent with determination of V_n, prior to being used in the equation.

(E) [Reserved].

(F) C_{MS} = GC concentration of sample, μ g/ml.

(G) AV = Volume of absorbing reagent in impinger.

(H) P_B = Barometric pressure at time of sampling, in. Hg.

(I) i = Initial sample.

(J) f = Final sample.

(K) 1 = First impinger.

(L) 2 = Second impinger.

(M) $M_{CH3OH,out}$=mass of methanol exiting the enclosure, in the case of fixed-volume enclosures for diurnal emission testing, μ g.

(N) $M_{CH3OH,in}$=mass of methanol entering the enclosure, in the case of fixed-volume enclosures for diurnal emission testing, μ g.

(ii) Hydrocarbon emissions:

$$M_{HC} = \left(kV_n \times 10^{-4}\right) \times \left(\frac{\left(C_{HC_f} - rC_{CH_3OH_f}\right)P_{B_f}}{T_f} - \frac{\left(C_{HC_i} - rC_{CH_3OH_i}\right)P_{B_i}}{T_i} \right) + M_{HC,out} - M_{HC,in}$$

Where,

(A) M_{HC}=Hydrocarbon mass change, g.

(B) C_{HC} = FID hydrocarbon concentration as ppm including FID response to methanol (or methane, as appropriate) in the sample.

(C) C_{CH3OH} = Methanol concentration as ppm carbon.

$$= \frac{1.501 \times 10^{-3} \times T}{P_B \times V_E} \times \left[\left(C_{S1} \times AV_1\right) + \left(C_{S2} \times AV_2\right)\right]$$

(D) V_n=Net enclosure volume ft³ (m³) as determined by subtracting 50 ft³ (1.42 m³) (volume of vehicle with trunk and windows open) from the enclosure volume. A manufacturer may use the measured volume of the vehicle (instead of the nominal 50 ft³) with advance approval by the Administrator, provided the measured volume is determined and used for all vehicles tested by that manufacturer.

(E) r=FID response factor to methanol.

(F) P_B=Barometric pressure, in Hg (Kpa).

(G) T=Enclosure temperature, °R(°K).

(H) i=initial reading.

(I) f=final reading.

(J) 1=First impinger.

(K) 2=Second impinger.

(L) Assuming a hydrogen to carbon ratio of 2.3:

(*1*) k=2.97; and

(*2*) For SI units, k=17.16.

(M) $M_{HC,out}$=mass of hydrocarbons exiting the enclosure, in the case of fixed-volume enclosures for diurnal emission testing, g.

(N) $M_{HC,in}$=mass of hydrocarbons entering the enclosure, in the case of fixed-volume enclosures for diurnal emission testing, g.

(iii) For variable-volume enclosures, defined in § 86.107(a)(1)(i), the following

simplified form of the hydrocarbon mass change equation may be used:

$$M_{HC} = \left(\frac{kP_B V_n \times 10^{-4}}{T}\right) \times \left[\left(C_{HC_f} - rC_{CH_3OH_f}\right) - \left(C_{HC_i} - rC_{CH_3OH_i}\right)\right]$$

(2) For running loss testing by the point-source method, the mass emissions of each test phase are calculated below, then summed for a total mass emission for the running loss test. If emissions are continuously sampled, the following equations can be used in integral form.

(i) Methanol emissions:

$M_{CH_3OH}=\rho_{CH_3OH}\ V_{mix}\times (C_{CH_3OH,rl} - C_{CH_3OH,d})$

Where,

(A) M_{CH_3OH}=methanol mass change, µg.

(B) ρ_{CH_3OH}= 37.71 g/ft³, density of pure vapor at 68 °F.

(C) V_{mix}=total dilute sample volume, in ft³, calculated as appropriate for the collection technique used.

(D) $C_{CH_3OH,rl}$=methanol concentration of diluted running loss sample, in ppm carbon equivalent.

(E) $C_{CH_3OH,d}$=methanol concentration of dilution air, in ppm carbon equivalent.

(ii) Hydrocarbon emissions:

$M_{HC}=\rho_{HC}\ V_{mix}10^{-6}\times(C_{HC,rl} - C_{HC,d})$

Where,

(A) M_{HC}=hydrocarbon mass change, g.

(B) ρ_{HC}= 16.88 g/ft³, density of pure vapor at 68 °F (for hydrogen to carbon ratio of 2.3).

(C) V_{mix}=total dilute sample volume, in ft³, calculated as appropriate for the collection technique used.

(D) $C_{HC,rl}$=hydrocarbon concentration of diluted running loss sample, in ppm carbon equivalent.

(E) $C_{HC,d}$=hydrocarbon concentration of dilution air, in ppm carbon equivalent.

(c) Calculate the adjusted total mass emissions for each test segment.

(1)
$$M_{DI} = \left(M_{HC} + \frac{14.3594}{32.042} \times 10^{-6} M_{CH_3OH}\right)_{DI}$$

where M_{DI}=mass emissions from the diurnal emission test (see § 86.133), g.

(2)
$$M_{HS} = \left(M_{HC} + \frac{14.2284}{32.042} \times 10^{-6} M_{CH_3OH}\right)_{HS}$$

where M_{HS}=mass emissions from the hot soak test (see § 86.138), g.

(3)
$$M_{RL} = \left(M_{HC} + \frac{14.2284}{32.042} \times 10^{-6} M_{CH_3OH} \right)_{RL}$$

where M_{RL}=mass emissions from the running loss test (see § 86.134), g.

(d)(1) For the full three-diurnal test sequence, there are two final results to report:

(i) The sum of the adjusted total mass emissions for the diurnal and hot soak tests (M_{DI}+M_{HS}); and

(ii) The adjusted total mass emissions for the running loss test, on a grams per mile basis=M_{RL}/D_{RL}, where D_{RL}=miles driven for the running loss test (see § 86.134–96(c)(6)).

(2) For the supplemental two-diurnal test sequence, there is one final result to report: the sum of the adjusted total mass emissions for the diurnal and hot soak tests (M_{DI}+M_{HS}), described in §§ 86.133–96(p) and 86.138–96(k), respectively.

[58 FR 16043, Mar. 24, 1993, as amended at 59 FR 48510, Sept. 21, 1994; 60 FR 34348, June 30, 1995; 60 FR 43897, Aug. 23, 1995]

§ 86.144–90 Calculations; exhaust emissions.

The final reported test results shall be computed by use of the following formula:

(a) For light-duty vehicles and light duty trucks:

$$Y_{wm} = 0.43\left(\frac{Y_{ct} + Y_s}{D_{ct} + D_s}\right) + 0.57\left(\frac{Y_{ht} + Y_s}{D_{ht} + D_s}\right)$$

Where:

(1) Y_{wm}=Weighted mass emissions of each pollutant, *i.e.*, HC, CO, NO_X or CO_2, in grams per vehicle mile and if appropriate, the weighted total hydrocarbon equivalent mass in grams per vehicle mile.

(2) Y_{ct}=Mass emissions as calculated from the ''transient'' phase of the cold start test, in grams per test phase.

(3) Y_{ht}=Mass emissions as calculated from the ''transient'' phase of the hot start test, in grams per test phase.

(4) Y_s=Mass emissions as calculated from the ''stabilized'' phase of the cold start test, in grams per test phase.

(5) D_{ct}=The measured driving distance from the ''transient'' phase of the cold start test, in miles.

(6) D_{ht}=The measured distance from the ''transient'' phase of the hot start test, in miles.

(7) D_s=The measured driving distance from the ''stabilized'' phase of the cold start test, in miles.

(b) The mass of each pollutant for each phase of both the cold start test and the hot start test is determined from the following:

(1) Hydrocarbon mass:

$HC_{mass}=V_{mix}\times Density_{HC}\times(HC_{conc}/1{,}000{,}000)$

(2) Oxides of nitrogen mass:

$NO_{xmass}=V_{mix}\times Density_{NO2}\times_H\times(NO_{xconc}/1{,}000{,}000)$

(3) Carbon monoxide mass:

$CO_{mass}=V_{mix}\times Density_{CO}\times(CO_{conc}/1{,}000{,}000)$

(4) Carbon dioxide mass:

$CO_{2mass}=V_{mix}\times Density_{CO2}\times(CO_{2conc}/100)$

(5) Methanol mass:

$CH_3OH_{mass}=V_{mix}\times Density_{CH3OH}\times(CH_3OH_{conc}/1{,}000{,}000)$

(6) Formaldehyde mass:

$HCHO_{mass}=V_{mix}\times Density_{HCHO}\times(HCHO_{conc}/1{,}000{,}000)$

(7) Total hydrocarbon equivalent mass:

(i) THCE=

$$HC_{Mass} + \frac{13.8756}{32.042}\left(CH_3OH_{mass}\right) + \frac{13.8756}{30.0262}\left(HCHO_{mass}\right)$$

(c) Meaning of symbols:

(1)(i) HC_{mass}=Hydrocarbon emissions, in grams per test phase.

(ii) $Density_{HC}$=Density of hydrocarbons is 16.33 g/ft^3 (0.5768 kg/m^3), assuming an average carbon to hydrogen ratio of 1:1.85, at 68 °F (20 °C) and 760 mm Hg (101.3 kPa) pressure.

(iii)(A) HC_{conc}=Hydrocarbon concentration of the dilute exhaust sample corrected for background, in ppm carbon equivalent, *i.e.*, equivalent propane ×3.

(B) $HC_{conc}=HC_e–HC_d(1-1/DF)$.

Where:

(iv)(A) HC_e=Hydrocarbon concentration of the dilute exhaust sample or, for diesel (or methanol-fueled vehicles, if selected), average hydrocarbon concentration of the dilute exhaust sample as calculated from the integrated HC traces, in ppm carbon equivalent.

(B) HC_e=FID $HC_e-(r)C_{CH3OHe}$

(v) FID HC_e=Concentration of hydrocarbon plus methanol in dilute exhaust as measured by the FID, ppm carbon equivalent.

(vi) r=FID response to methanol.

(vii) C_{CH3OHe}=Concentration of methanol in dilute exhaust as determined from the dilute exhaust methanol sample in ppm carbon. For vehicles not fueled with methanol, C_{CH3OHe} equals zero.

(viii)(A) HC_d=Hydrocarbon concentration of the dilution air as measured, in ppm carbon equivalent.

(B) HC_d=FID $HC_d-(r)C_{CH3OHd}$

(ix) FID HC_d=Concentration of hydrocarbon plus methanol in dilution air as measured by the FID, ppm carbon equivalent.

(x) C_{CH3OHd}=Concentration of methanol in dilution air as determined from dilution air methanol sample in ppm carbon. For vehicles not fueled with methanol, C_{CH3OHd} equal zero.

(2)(i) NO_{Xmass}=Oxides of nitrogen emissions, in grams per test phase.

(ii) $Density_{NO2}$=Density of oxides of nitrogen is 54.16 g/ft^3 (1.913 kg/m^3) assuming they are in the form of nitrogen dioxide, at 68 °F (20 °C) and 760 mm Hg (101.3kPa) pressure.

(iii)(A) NOx_{conc}=Oxides of nitrogen concentration of the dilute exhaust sample corrected for background, in ppm.

(B) $NOx_{conc}=NOx_e-NOx_d(1-(1/DF))$.

Where:

(iv) NOx_e=Oxides of nitrogen concentration of the dilute exhaust sample as measured, in ppm.

(v) NOx_d=Oxides of nitrogen concentration of the dilution air as measured, in ppm.

(3)(i) CO_{mass}=Carbon monoxide emissions, in grams per test phase.

(ii) $Density_{co}$=Density of carbon monoxide is 32.97 g/ft^3 (1.164 kg/m^3), at 68 °F (20 °C) and 760 mm Hg (101.3 kPa) pressure.

(iii)(A) CO_{conc}=Carbon monoxide concentration of the dilute exhaust sample corrected for background, water vapor, and CO_2 extraction, in ppm.

(B) $CO_{conc}=CO_e-CO_d(1-(1/DF))$.

Where:

(iv)(A) CO_e=Carbon monoxide concentration of the dilute exhaust volume corrected for water vapor and carbon dioxide extraction, in ppm.

(B) $CO_e=(1-0.01925CO_{2e}-0.000323R)CO_{em}$ for petroleum fuel with hydrogen to carbon ratio of 1.85:1.

(C) $CO_e=[1-(0.01 + 0.005HCR)CO_{2e}-0.000323R]CO_{em}$ for methanol fuel, where HCR is hydrogen-to-carbon ratio as measured for the fuel used.

(v) CO_{em}=Carbon monoxide concentration of the dilute exhaust sample as measured, in ppm.

(vi) CO_{2e}=Carbon dioxide concentration of the dilute exhaust sample, in percent.

(vii) R=Relative humidity of the dilution air, in percent (see §86.142(n)).

(viii)(A) CO_d=Carbon monoxide concentration of the dilution air corrected for water vapor extraction, in ppm.

(B) $CO_d=(1-0.000323R)CO_{dm}$.

Where:

(ix) CO_{dm}=Carbon monoxide concentration of the dilution air sample as measured, in ppm.

NOTE: If a CO instrument which meets the criteria specified in §86.111 is used and the conditioninq column has been deleted, CO_{em} must be substituted directly for CO_e and CO_{dm} must be substituted directly for CO_d.

(4)(i) CO_{2mass}=Carbon dioxide emissions, in grams per test phase.

(ii) Density CO_2=Density of carbon dioxide is 51.81 g/ft³ (1.830 kg/m³), at 68 °F (20 °C) and 760 mm Hg (101.3 kPa) pressure.

(iii)(A) CO_{2conc}=Carbon dioxide concentration of the dilute exhaust sample corrected for background, in percent.

(B) $CO_{2conc}=C0_{2e}-CO_{2d}(1-(1/DF))$.

Where:

(iv) CO_{2d}=Carbon dioxide concentration of the dilution air as measured, in percent.

(5)(i) CH_3OH_{mass}=Methanol emissions corrected for background, in grams per test phase.

(ii) $Density_{CH3OH}$=Density of methanol is 37.71 g/ft³ (1.332 kg/m³), at 68 °F (20 °C) and 760 mmHg (101.3kPa) pressure.

(iii)(A) CH_3OH_{conc}=Methanol concentration of the dilute exhaust corrected for background, ppm.

(B) $CH_3OH_{conc}=C=_{CH3OHe}-C_{CH3OHd}(1-(1/DF))$

Where:

(iv)(A) C_{CH3OHe}=Methanol concentration in the dilute exhaust, ppm.

(B)

$$C_{CH3OHe}=\frac{3.813\times10^{-2}\times C_{CH3OHR}\times T_{EM}\left[\left(A_{S1}\times AV_{S1}\right)+\left(A_{S2}\times AV_{S2}\right)\right]}{A_{CH3OHR}\times P_B\times V_{EM}}$$

(v)(A) C_{CH3OHd}=Methanol concentration in the dilution air, ppm.

(B)

$$C_{CH3OHd}=\frac{3.813\times10^{-2}\times C_{CH3OHR}\times T_{DM}\left[\left(A_{D1}\times AV_{D1}\right)+\left(A_{D2}\times AV_{D2}\right)\right]}{A_{CH3OHR}\times P_B\times V_{DM}}$$

(vi) C_{CH3OHR}=Concentration of methanol in standard sample for calibration of GC, μg/ml.

(vii) A_{CH3OHR}=GC peak area of standard sample.

(viii) T_{EM}=Temperature of methanol sample withdrawn from dilute exhaust, °R.

(ix) T_{DM}=Temperature of methanol sample withdrawn from dilution air, °R.

(x) P_B=Barometric pressure during test, mm Hg.

(xi) V_{EM}=Volume of methanol sample withdrawn from dilute exhaust, ft³.

(xii) V_{DM}=Volume of methanol sample withdrawn from dilution air, ft³.

(xiii) A_S=GC peak area of sample drawn from dilute exhaust.

(xiv) A_D=GC peak area of sample drawn from dilution air.

(xv) AV_S=Volume of absorbing reagent (deionized water) in impinger through which methanol sample from dilute exhaust is drawn, ml.

(xvi) AV_D = Volume of absorbing reagent (deionized water) in impinger through which methanol sample from dilution air is drawn, ml.

(6)(i) $HCHO_{mass}$ = Formaldehyde emissions corrected for background, in grams per test phase.

(ii) $Density_{HCHO}$ = Density of formaldehyde is 35.36 g/ft³ (1.249 kg/m³), at 68 °F (20 °C) and 760 mmHg (101.3 kPa) pressure.

(iii)(A) $HCHO_{conc}$ = Formaldehyde concentration of the dilute exhaust corrected for background, in ppm.

(B) $HCHO_{conc} = C_{HCHOe} - C_{HCHOd}\ (1 - (1/DF))$

Where:

(iv)(A) C_{HCHOe} = Formaldehyde concentration in dilute exhaust, in ppm.

(B)

$$C_{HCHOe} = \frac{4.069 \times 10^{-2} \times C_{FDE} \times V_{AE} \times Q \times T_{EF}}{V_{SE} \times P_B}$$

(v)(A) C_{HCHOd} = Formaldehyde concentration in dilution air in ppm.

(B)

$$C_{HCHOd} = \frac{4.069 \times 10^{-2} \times C_{FDA} \times V_{AA} \times Q \times T_{DF}}{V_{SA} \times P_B}$$

(vi) C_{FDE} = Concentration of DNPH derivative of formaldehyde from dilute exhaust sample in sampling solution, µg/ml.

(vii) V_{AE} = Volume of sampling solution for dilute exhaust formaldehyde sample, ml.

(viii)(A) Q = Ratio of molecular weights of formaldehyde to its DNPH derivative.

(B) Q = 0.1429.

(ix) T_{EF} = Temperature of formaldehyde sample withdrawn from dilute exhaust, °R.

(x) V_{SE} = Volume of formaldehyde sample withdrawn from dilute exhaust, ft^3.

(xi) P_B = Barometric pressure during test, mm Hg.

(xii) C_{FDA} = Concentration of DNPH derivative of formaldehyde from dilution air sample in sampling solution, µg/ml.

(xiii) V_{AA} = Volume of sampling solution for dilution air formaldehyde sample, ml.

(xiv) T_{DF} = Temperature of formaldehyde sample withdrawn from dilution air, °R.

(xv) V_{SA} = Volume of formaldehyde sample withdrawn from dilution air, ft^3.

(7)(i) DF = $13.4/[CO_{2e} + (HC_e + CO_e) 10^{-4}]$ for petroleum-fueled vehicles.

(ii)

$$DF = \frac{100\left(\frac{X}{x + y/2 + 3.76(x + y/4 - z/2)}\right)}{CO_{2e} + \left(HC_e + CO_e + C_{CH_3OHe} + C_{HCHOe}\right)10^{-4}}$$

for methanol-fueled vehicles where fuel composition is $C_x H_y O_z$ as measured for the fuel used.

(iii)(A) K_H = Humidity correction factor.

(B) $K_H = 1/[1 - 0.0047(H - 75)]$.

(C) *For SI units,* $K_H = 1/[1 - 0.0329(H - 10.71)]$.

Where:

(iv)(A) H = Absolute humidity in grains (grams) of water per pound (kilogram) of dry air.

(B) $H = [(43.478)R_a \times P_d]/[P_B - (P_d \times R_a/100)]$.

(C) *For SI units,* $H = [(6.211)R_a \times P_d]/[P_B - (P_d \times R_a/100)]$.

(v) R_a = Relative humidity of the ambient air, percent.

(vi) P_d = Saturated vapor pressure, mm Hg (kPa) at the ambient dry bulb temperature.

(vii) P_B = Barometric pressure, mm Hg (kPa),

(viii)(A) V_{mix} = Total dilute exhaust volume in cubic feet per test phase corrected to standard conditions (528 °R (293 °K) and 760 mm Hg (101.3 kPa)).

(B) For PDP–CVS, V_{mix} is:

$$V_{mix} = \frac{V_o \times N \times (P_B - P_4) \times 528}{760 \times T_P}$$

(C) *For SI units,*

$$V_{mix} = \frac{V_o \times N \times (P_B - P_4) \times 293}{101.3 \times T_P}$$

Where:

(ix) V_o = Volume of gas pumped by the positive displacement pump, in cubic feet (m^3) per revolution. This volume is dependent on the pressure differential across the positive displacement pump.

(x) N = Number of revolutions of the positive displacement pump during the test phase while samples are being collected.

(xi) P_B = Barometric pressure, mm Hg (kPa).

(xii) P_4 = Pressure depression below atmospheric measured at the inlet to the positive displacement pump, in mm Hg (kPa) (during an idle mode).

(xiii) T_p = Average temperature of dilute exhaust entering positive displacement pump during test, °R(°K).

(d) For petroleum-fueled vehicles, example calculation of mass values of exhaust emissions using positive displacement pump:

(1) For the ''transient'' phase of the cold start test assume the following:

V_o = 0.29344 ft^3/rev; N = 10,485; R = 48.0 pct; R_a = 48.2 percent; P_B = 762 mm Hg; P_d = 22.225 mm Hg; P_4 = 70 mm Hg; T_p = 570 °R; HC_e = 105.8 ppm, carbon equivalent; NO_{xe} = 11.2 ppm; CO_{em} = 306.6 ppm; CO_{2e} = 1.43 percent; HC_d = 12.1 ppm; NO_{xd} = 0.8 ppm; CO_{dm} = 15.3 ppm; CO_{2d} = 0.032 percent; D_{ct} = 3.598 miles.

Then:

(i) V_{mix} = (0.29344)(10,485)(762 − 70)(528)/(760)(570) = 2595.0 ft^3 per test phase.

(ii) H=(43.478)(48.2)(22.225)/762 − (22.225)(48.2/100) = 62 grains of water per pound of dry air.

(iii) K_H = 1/[1 − 0.0047(62 − 75)] = 0.9424

(iv) CO_e = [1 − 0.01925(1.43) − 0.000323(48)](306.6) = 293.4 ppm.

(v) CO_d = [1 − 0.000323(48)](15.3) = 15.1 ppm.

(vi) DF = 13.4/[1.43 + 10^{-4}(105.8 + 293.4)] = 9.116.

(vii) HC_{conc} = 105.8 − 12.1(1 − 1/9.116) = 95.03 ppm.

(viii) HC_{mass} = (2595)(16.33)(95.03/1,000,000) = 4.027 grams per test phase.

(ix) NOx_{conc} = 11.2 − 0.8(1 − 1/9.116) = 10.49 ppm.

(x) NOx_{mass} = (2595)(54.16)(10.49/1,000,000)(0.9424) = 1.389 grams per test phase.

(xi) CO_{conc} = 293.4 − 15.1(1 − 1/9.116) = 280.0 ppm.

(xii) CO_{mass} = (2595)(32.97)(280/1,000,000) = 23.96 grams per test phase.

(xiii) CO_{2conc} = 1.43 − 0.032(1 − 1/9.116) = 1.402 percent.

(xiv) CO_{2mass} = (2595.0)(51.85)(1.402/100) = 1886 grams per test phase.

(2) For the stabilized portion of the cold start test assume that similar calculations resulted in the following:

(i) HC_{mass} = 0.62 grams per test phase.

(ii) NOx_{mass} = 1.27 grams per test phase.

(iii) CO_{mass} = 5.98 grams per test phase.

(iv) CO_{2mass} = 2346 grams per test phase.

(v) D_s = 3.902 miles.

(3) For the ''transient'' portion of the hot start test assume that similar calculations resulted in the following:

(i) HC_{mass} = 0.51 gram per test phase.

(ii) NOx_{mass} = 1.38 grams per test phase.

(iii) CO_{mass} = 5.01 grams per test phase.

(iv) CO_{2mass} = 1758 grams per test phase.

(v) D_{ht} = 3.598 miles.

(4) Weighted mass emission results:

(i) HC_{wm} = 0.43[(4.027 + 0.62)/(3.598 + 3.902)] + 0.57[(0.51 + 0.62)/(3.598 + 3.902)] = 0.352 grams per vehicle mile.

(ii) NO_{xwm} = 0.43[(1.389 + 1.27)/(3.598 + 3.902)] + 0.57[(1.38 + 1.27)/(3.598 + 3.902)] = 0.354 grams per vehicle mile.

(iii) CO_{wm} = 0.43[(23.96 + 5.98)/(3.598 + 3.902)] + 0.57[(5.01 + 5.98)/(3.598 + 3.902)] = 2.55 grams per vehicle mile.

(iv) CO_{2wm} = 0.43[(1886 + 2346)/(3.598 + 3.902) + 0.57[(1758 + 2346)/(3.598 + 3.902)] = 555 grams per vehicle mile.

(e) For methanol-fueled vehicle with measured fuel composition of $CH_{3.14}$ $O_{0.6}$ example calculation of exhaust emissions using positive displacement pump:

(1) For the ''transient'' phase of the cold start test assume the following:

V_o = 0.29344 ft³/rev; N = 10,485; R = 48.0 pct; R_a = 48.2 percent; P_B = 762 mm Hg; P_d = 22.225 mm Hg; P_4 = 70 mm Hg; T_p 570 °R; FID HC_e = 81.6 ppm, carbon equivalent; r = 0.75; C_{CH30HR} = 71 ug/ml; T_{EM} = 567 °R; A_{CH3OHR} = 3660; V_{EM} 1.18 ft³; A_{Sl} = 4460; AV_{sl} = 25.2 ml; A_{s2} = 360; AV_{s2} = 24.9 ml; T_{DM} = 532 °R; V_{DM} = 1.17 ft³; A_{Dl} = 110; AV_{D1} = 25.0 ml; A_{D2} = 10; AV_{D2} = 25.1 ml; C_{FDE} = 20 ug/ml; V_{AE} = 5.0 ml; Q = 0.1429; T_{EF} = 569 °R; V_{SE} = 0.30 ft³; C_{FDA} = 1 ug/ml; V_{AA} = 5.0 ml; T_{DF} = 532 °R; V_{SA} = 0.31 ft³; NOx_e = 11.2 ppm; CO_{em} = 306.6 ppm; CO_{2e} = 1.43 pct; FID HC_d = 12.1 ppm; NOx_d = 0.8 ppm; CO_{dm} = 15.3 ppm; CO_{2d} = 0.032 percent; D_{ct} = 3.598 miles.

Then:

(i) V_{mix} = (0.29344)(10,485)(762 − 70)(528)/(760)(570) = 2595.0 ft³ per test phase.

(ii) H = (43.478)(48.2)(22.225)/[762 − (22.225 × 48.2/100)] = 62 grains of water per pound of dry air.

(iii) K_H = 1/[1 − 0.0047(62 − 75)] = 0.9424.

(iv) CO_e = [1 − (0.01 + 0.005 × 3.14 × 1.43) − 0.000323(48))] × 306.6 = 291.9 ppm.

(v) CO_d = (1 − 0.000323(48)) × 15.3 = 15.1 ppm.

(vi) C_{CH3OHe} = (3.813×10^{-2})(71)(567)[(4460)(25.2) + (360)(24.9)] / (3660)(762)(1.18) = 56.60 ppm.

(vii) DF = 100(1/[1 + (3.14/2) + 3.76(1 + (3.14/4) − (0.6/2))])/1.43 + 10^{-4}[(81.6 + 291.9 + (1 − 0.75)(56.60)] = 8.350

(viii) C_{CH3OHd} = (3.813×10^{-2})(71)(532)[(110)(25.0) + (10)(25.1)] / (3660)(762)(1.17) = 1.32 ppm.

(ix) CH_3OH_{conc}=56.60−1.32(1−1/8.350)=55.44 ppm.

(x) CH_3OH_{mass}=2595.0×37.71×(55.44/1,000,000)=5.43 grams per test phase.

(xi) HC_{conc} = [81.6−(0.75)(56.60)]−[12.1−(0.75)(1.32)](1−1/8.530) = 29.34 ppm.

(xii) HC_{mass}=(2594) (16.33) (29.34/1,000,000)=1.24 grams per test phase.

(xiii) C_{HCHOe} = 4.069 × 10^{-2}(20)(5)(0.1429)(569)/(0.30)(762) = 1.4473 ppm.

(xiv) C_{HCHOd} = 4.069 × 10^{-2}(1)(5)(0.1429)(532)/(0.31)(762) = 0.0655 ppm.

(xv) $HCHO_{conc}$=1.4473−0.0655(1−1/8.350)=1.3896 ppm.

(xvi) $HCHO_{mass}$=(2595)(35.36)(1.3896/1,000,000)=0.1275 grams per test phase.

(xvii) THCE=1.24+(13.8756/32.042)(5.43)+(13.8756/30.0262)(0.1275)=3.65 grams per test phase.

(xviii) NOx_{conc}=11.2−(0.8)(1−1/8.350)=10.50 ppm

(xix) NOx_{mass}=(2595)(54.16)(10.50/1,000,000)(0.9424)=1.390 grams per test phase.

(xx) CO_{conc}=291.9−15.1 (1−1/8.350)=278.61 ppm.

(xxi) CO_{mass}=(2595.0)(32.97)(278.69/1,000,000)=23.84 grams per test phase.

(xxii) CO_{2conc}=1.43−0.032 (1−1/8.350)=1.402 percent.

(xxiii) CO_{2mass}=(2595.0)(51.85)(1.402/100)=1886 grams per test phase.

(2) For the stabilized portion of the cold start test assume that similar calculations resulted in the following:

(i) THCE=0.55 grams per test phase.

(ii) NOx_{mass}=1.27 grams per test phase.

(iii) CO_{mass}=5.98 grams per test phase.

(iv) CO_{2mass}=2346 grams per test phase.

(v) D_s=3.902 miles.

(3) For the ''transient'' portion of the hot start test assume that similar calculations resulted in the following:

(i) THCE=0.67 grams as carbon equivalent per test phase.

(ii) NOx_{mass}=1.38 grams per test phase.

(iii) CO_{mass}=5.01 grams per test phase.

(iv) CO_{2mass}=1758 grams per test phase.

(v) D_{ht}=3.598 miles.

(4) Weighted emission results:

(i) $THCE_{wm}$=0.43[(3.65+0.55)/(3.598+3.902)]+0.57[(0.67+0.55)/(3.598+3.902)]=0.334 grams as carbon equivalent per mile.

(ii) NOx_{wm}=0.43[(1.390+1.27)/(3.598+3.902)]+0.57[1.38+1.27)/(3.598+3.902)]=0.354 grams per vehicle mile.

(iii) CO_{wm}=0.43[(23.84+5.98)/(3.598+3.902)]+0.57[(5.01+5.98)/(3.598+3.902)]=2.54 grams per vehicle mile.

(iv) CO_{2wm}=0.43[(1886+2346)/(3.598+3.902)]+0.57[(1758+2346)/(3.598+3.902)]=555 grams per vehicle mile.

[54 FR 14535, Apr. 11, 1989, as amended at 59 FR 39649, Aug. 3, 1994]

§ 86.144–94 Calculations; exhaust emissions.

The final reported test results shall be computed by use of the following formula:

(a) For light-duty vehicles and light duty trucks:

$$Y_{wm} = 0.43\left(\frac{(Y_{ct}+Y_s)}{(D_{ct}+D_s)}\right)+0.57\left(\frac{(Y_{ht}+Y_s)}{(D_{ht}+D_s)}\right)$$

Where:

(1) Y_{WM} = Weighted mass emissions of each pollutant, *i.e.*, THC, CO, THCE, NMHC, NMHCE, CH_4, NO_X, or CO_2, in grams per vehicle mile.

(2) Y_{ct}=Mass emissions as calculated from the ''transient'' phase of the cold start test, in grams per test phase.

(3) Y_{ht}=Mass emissions as calculated from the ''transient'' phase of the hot start test, in grams per test phase.

(4) Y_s=Mass emissions as calculated from the ''stabilized'' phase of the cold start test, in grams per test phase.

(5) D_{ct}=The measured driving distance from the ''transient'' phase of the cold start test, in miles.

(6) D_{ht}=The measured distance from the ''transient'' phase of the hot start test, in miles.

(7) D_s=The measured driving distance from the ''stabilized'' phase of the cold start test, in miles.

(b) The mass of each pollutant for each phase of both the cold start test and the hot start test is determined from the following:

(1) Total hydrocarbon mass:

$HC_{mass}=V_{mix} \times Density_{HC} \times (HC_{conc}/1{,}000{,}000)$

(2) Oxides of nitrogen mass:

$NOx_{mass}=V_{mix} \times Density_{NO2} \times K_H \times (NOx_{conc}/1{,}000{,}000)$

(3) Carbon monoxide mass:

$CO_{mass}=V_{mix} \times Density_{CO} \times (CO_{conc}/1{,}000{,}000)$

(4) Carbon dioxide mass:

$CO_{2mass}=V_{mix} \times Density_{CO2} \times (CO_{2conc}/100)$

(5) Methanol mass:

$CH_3OH_{mass}=V_{mix} \times Density_{CH}3OH \times (CH_3OH_{conc}/1{,}000{,}000)$

(6) Formaldehyde mass:

$HCHO_{mass}=V_{mix} \times Density_{HCHO} \times (HCHO_{conc}/1{,}000{,}000)$

(7) Total hydrocarbon equivalent mass:

$THCE_{mass} = HC_{mass} + 13.8756/32.042 \times (CH_3OH_{mass)} + 13.8756/32.0262 \times (HCHO_{mass})$

(8) Non-methane hydrocarbon mass:

$NMHC_{mass} = V_{mix} \times Density_{NMHC} \times (NMHC_{conc}/1{,}000{,}000)$

(9) Non-methane hydrocarbon equivalent mass:

$NMHCE_{mass} = NMHC_{mass} + 13.8756/32.042 \times (CH_3OH_{mass}) + 13.8756/30.0262 \times (HCHO_{mass})$

(10) Methane mass:

$CH_{4mass}=V_{mix}=Density_{CH4}=(CH_{4conc}/1{,}000{,}00)$

(c) Meaning of symbols:

(1)(i) HC_{mass}=Total hydrocarbon emissions, in grams per test phase.

(ii) $Density_{HC}$=Density of total hydrocarbon.

(A) *For gasoline-fuel, diesel-fuel and methanol fuel;* $Density_{HC}$=16.33 g/ft^3−carbon atom (0.5768 kg/m^3−carbon

atom), assuming an average carbon to hydrogen ratio of 1:1.85, at 68 °F (20 °C) and 760 mm Hg (101.3 kPa) pressure.

(B) *For natural gas and liquefied petroleum gas-fuel;* $Density_{HC}$=1.1771 (12.011+H/C (1.008)) g/ft^3−carbon atom (0.04157(12.011+H/C (1.008))kg/m^3−carbon atom), where H/C is the hydrogen to carbon ratio of the hydrocarbon components of the test fuel, at 68 °F (20 °C) and 760 mm Hg (101.3 kPa) pressure.

(iii)(A) HC_{conc}=Total hydrocarbon concentration of the dilute exhaust sample corrected for background, in ppm carbon equivalent, i.e., equivalent propane ×3.

(B) $HC_{conc}=HC_e-HC_d(1-1/DF)$.

Where:

(iv)(A) HC_e=Total hydrocarbon concentration of the dilute exhaust sample or, for diesel-cycle (or methanol-fueled vehicles, if selected), average hydrocarbon concentration of the dilute exhaust sample as calculated from the integrated THC traces, in ppm carbon equivalent.

(B) HC_e=FID $HC_e-(r)C_{CH^3OHe}$.

(v) FID HC_e=Concentration of total hydrocarbon plus methanol in dilute exhaust as measured by the FID, ppm carbon equivalent.

(vi) r=FID response to methanol.

(vii) C_{CH^3OHe}=Concentration of methanol in dilute exhaust as determined from the dilute exhaust methanol sample in ppm carbon. For vehicles not fueled with methanol, C_{CH^3OHe} equals zero.

(viii)(A) HC_d=Total hydrocarbon concentration of the dilution air as measured, in ppm carbon equivalent.

(B) HC_d=FID $HC_d-(r)C_{CH^3OHd}$.

(ix) FID HC_d=Concentration of total hydrocarbon plus methanol in dilution air as measured by the FID, ppm carbon equivalent.

(x) C_{CH^3OHd}=Concentration of methanol in dilution air as determined from dilution air methanol sample in ppm carbon. For vehicles not fueled with methanol, C_{CH^3OHd} equals zero.

(2)(i) NOx_{mass}=Oxides of nitrogen emissions, in grams per test phase.

(ii) $Density_{NO2}$=Density of oxides of nitrogen is 54.16 g/ft3 (1.913 kg/m^3) assuming they are in the form of nitrogen dioxide, at 68 °F (20 °C) and 760 mm Hg (101.3kPa) pressure.

(iii)(A) NOx_{conc}=Oxides of nitrogen concentration of the dilute exhaust sample corrected for background, in ppm.

(B) $NOx_{conc}=NOx_e-NOx_d(1-(1/DF))$.

Where:

(iv) NOx_e=Oxides of nitrogen concentration of the dilute exhaust sample as measured, in ppm.

(v) NOx_d=Oxides of nitrogen concentration of the dilution air as measured, in ppm.

(3)(i) CO_{mass}=Carbon monoxide emissions, in grams per test phase.

(ii) $Density_{CO}$ = Density of carbon monoxide is 32.97 g/ft^3 (1.164 kg/m3), at 68 °F (20 °C) and 760 mm Hg (101.3 kPa) pressure.

(iii)(A) CO_{conc} = Carbon monoxide concentration of the dilute exhaust sample corrected for background, water vapor, and CO_2 extraction, in ppm.

(B) $CO_{conc} = CO_e - CO_d(1 - (1/DF))$.

Where:

(iv)(A) CO_e = Carbon monoxide concentration of the dilute exhaust volume corrected for water vapor and carbon dioxide extraction, in ppm.

(B) $CO_e = (1 - 0.01925CO_{2e} - 0.000323R)CO_{em}$ for petroleum fuel with hydrogen to carbon ratio of 1.85:1.

(C) $CO_e=[1-(0.01+0.005HCR)CO_{2e}-0.000323R]CO_{em}$ for methanol-fuel or natural gas-fuel or liquefied petroleum gas-fuel, where HCR is hydrogen-to-carbon ratio as measured for the fuel used.

(v) CO_{em} = Carbon monoxide concentration of the dilute exhaust sample as measured, in ppm.

(vi) CO_{2e} = Carbon dioxide concentration of the dilute exhaust sample, in percent.

(vii) R = Relative humidity of the dilution air, in percent (see § 86.142(n)).

(viii)(A) CO_d = Carbon monoxide concentration of the dilution air corrected for water vapor extraction, in ppm.

(B) $CO_d = (1–0.000323R)CO_{dm}$.

Where:

(ix) CO_{dm} = Carbon monoxide concentration of the dilution air sample as measured, in ppm.

NOTE: If a CO instrument which meets the criteria specified in § 86.111 is used and the conditioning column has been deleted, CO_{em} must be substituted directly for CO_e and CO_{dm} must be substituted directly for CO_d.

(4)(i) CO_{2mass} = Carbon dioxide emissions, in grams per test phase.

(ii) Density CO_2 = Density of carbon dioxide is 51.81 g/ft³ (1.830 kg/m³), at 68 °F (20 °C) and 760 mm Hg (101.3 kPa) pressure.

(iii)(A) CO_{2conc} = Carbon dioxide concentration of the dilute exhaust sample corrected for background, in percent.

(B) $CO_{2conc} = CO_{2e} - CO_{2d}(1 - (1/DF))$.

Where:

(iv) CO_{2d} = Carbon dioxide concentration of the dilution air as measured, in percent.

(5)(i) CH_3OH_{mass} = Methanol emissions corrected for background, in grams per test phase.

(ii) $Density_{CH3OH}$=Density of methanol is 37.71 g/ft³-carbon atom (1.332 kg/m³-carbon atom), at 68 °F (20 °C) and 760 mm Hg (101.3 kPa) pressure.

(iii)(A) CH_3OH_{conc} = Methanol concentration of the dilute exhaust corrected for background, ppm.

(B) $CH_3OH_{conc} = C_{CH3OHe} - C_{CH3OHd}(1 - (1/DF))$.

Where:

(iv)(A) C_{CH3OHe}=Methanol concentration in the dilute exhaust, ppm.

(B)

$$C_{CH3OHe} = \frac{3.813 \times 10^{-2} \times T_{EM}\left[\left(C_{S1} \times AV_{S1}\right) + \left(C_{S2} \times AV_{S2}\right)\right]}{P_B \times V_{EM}}$$

(v)(A) C_{CH3OHd}=Methanol concentration in the dilution air, ppm.

(B)

$$C_{CH3OHd} = \frac{3.813 \times 10^{-2} \times T_{DM}\left[\left(C_{D1} \times AV_{D1}\right) + \left(C_{D2} \times AV_{D2}\right)\right]}{P_B \times V_{DM}}$$

(vi) T_{EM}=Temperature of methanol sample withdrawn from dilute exhaust, °R.

(vii) T_{DM}=Temperature of methanol sample withdrawn from dilution air, °R.

(viii) P_B=Barometric pressure during test, mm Hg.

(ix) V_{EM}=Volume of methanol sample withdrawn from dilute exhaust, ft³.

(x) V_{DM}=Volume of methanol sample withdrawn from dilution air, ft³.

(xi) C_S=GC concentration of sample drawn from dilute exhaust, µg/ml.

(xii) C_D=GC concentration of sample drawn from dilution air, µg/ml.

(xiii) AVS=Volume of absorbing reagent (deionized water) in impinger through which methanol sample from dilute exhaust is drawn, ml.

(xiv) AVD=Volume of absorbing reagent (deionized water) in impinger through which methanol sample from dilution air is drawn, ml.

(xv) 1=first impinger.

(xvi) 2=second impinger.

(xvii) 1 = first impinger.

(xviii) 2 = second impinger.

(6)(i) $HCHO_{mass}$ = Formaldehyde emissions corrected for background, in grams per test phase.

(ii) $Density_{HCHO}$=Density of formaldehyde is 35.36 g/ft³- carbon atom (1.249 kg/m³-carbon atom), at 68 °F (20 °C) and 760 mm Hg (101.3 kPa) pressure.

(iii)(A) $HCHO_{conc}$ = Formaldehyde concentration of the dilute exhaust corrected for background, in ppm.

(B) $HCHO_{conc} = C_{HCHOe} - C_{HCHOd}(1 - (1/DF))$.

Where:

(iv)(A) C_{HCHOe} = Formaldehyde concentration in dilute exhaust, in ppm.

(B)

$$C_{HCHOe} = \frac{4.069 \times 10^{-2} \times C_{FDE} \times V_{AE} \times Q \times T_{EF}}{V_{SE} \times P_B}$$

(v)(A) C_{HCHOd} = Formaldehyde concentration in dilution air in ppm.

(B)

$$C_{HCHOd} = \frac{4.069 \times 10^{-2} \times C_{FDA} \times V_{AA} \times Q \times T_{DF}}{V_{SA} \times P_B}$$

(vi) C_{FDE} = Concentration of DNPH derivative of formaldehyde from dilute exhaust sample in sampling solution, µg/ml.

(vii) V_{AE} = Volume of sampling solution for dilute exhaust formaldehyde sample, ml.

(viii)(A) Q = Ratio of molecular weights of formaldehyde to its DNPH derivative.

(B) Q = 0.1429.

(ix) T_{EF} = Temperature of formaldehyde sample withdrawn from dilute exhaust, °R.

(x) V_{SE} = Volume of formaldehyde sample withdrawn from dilute exhaust, ft^3.

(xi) P_B = Barometric pressure during test, mm Hg.

(xii) C_{FDA} = Concentration of DNPH derivative of formaldehyde from dilution air sample in sampling solution, µg/ml.

(xiii) V_{AA} = Volume of sampling solution for dilution air formaldehyde sample, ml.

(xiv) T_{DF} = Temperature of formaldehyde sample withdrawn from dilution air, °R.

(xv) V_{SA} = Volume of formaldehyde sample withdrawn from dilution air, ft^3.

(7)(i) DF = 13.4/[CO_{2e} + (HC_e + CO_e) 10^{-4}] for petroleum-fueled vehicles.

(ii) For methanol-fueled vehicles, where fuel composition is C_x H_y O_z as measured, or calculated, for the fuel used:

$$DF = \frac{(100)\dfrac{x}{x + y/2 + 3.76\ (x + y/2 - z/2)}}{CO_{2e} + \left(HC_e + CO_e + CH_3OH_e + HCHO_e\right) \times 10^{-4}}$$

(iii)

$$DF = \frac{100 \times \dfrac{x}{x + y/2 + 3.76(x + y/4)}}{CO_{2e} + \left(NMHC_e + CH_{4e} + CO_e\right) \times 10^{-4}}$$

for natural gas-fueled or liquefied petroleum gas-fueled vehicles where fuel composition is C_x H_y as measured for the fuel used.

(iv)(A) K_H=Humidity correction factor.

(B) K_H=1/[1 − 0.0047(H − 75)].

(C) *For SI units,* K_H=1×[1–0.0329(H×10.71)].

Where:

(v)(A) H=Absolute humidity in grains (grams) of water per pound (kilogram) of dry air.

(B) H=[(43.478)R_a × P_d]/[P_B − (P_d × R_a/100)].

(C) *For SI units,* H=[(6.211)R_a × P_d]/[P_B×(P_d × R_a/100)].

(vi) R_a=Relative humidity of the ambient air, percent.

(vii) P_d=Saturated vapor pressure, mm Hg (kPa) at the ambient dry bulb temperature.

(viii) P_B=Barometric pressure, mm Hg (kPa).

(ix)(A) V_{mix}=Total dilute exhaust volume in cubic feet per test phase corrected to standard conditions (528°R (293 °K) and 760 mm Hg (101.3 kPa)).

(B) For PDP–CVS, V_{mix} is:

$$V_{mix} = \frac{V_O \times N \times (P_B - P_4) \times 528}{760 \times T_p}$$

(C) *For SI units,*

$$V_{mix} = \frac{V_o \times N \times (P_B - P_4) \times 293}{101.3 \times T_p}$$

Where:

(x) V_o=Volume of gas pumped by the positive displacement pump, in cubic feet (m^3) per revolution. This volume is dependent on the pressure differential across the positive displacement pump.

(xi) N=Number of revolutions of the positive displacement pump during the test phase while samples are being collected.

(xii) P_B=Barometric pressure, mm Hg (kPa).

(xiii) P_4=Pressure depression below atmospheric measured at the inlet to the positive displacement pump, in mm Hg (kPa) (during an idle mode).

(xiv) T_p=Average temperature of dilute exhaust entering positive displacement pump during test, °R(°K).

(8)(i) $NMHC_{conc}=HC_{conc}-(r_{CH4} \times CH_{4conc})$.

(ii) $Density_{NMHC}$=The density of non-methane hydrocarbon.

(A) *For gasoline-fuel and diesel-fuel;* $Density_{NMHC}$=16.33 g/ft^3-carbon atom (0.5768 kg/m^3-carbon atom), assuming an average carbon to hydrogen ratio of 1:1.85 at 68 °F (20 °C) and 760 mm Hg (101.3 kPa) pressure.

(B) For natural gas and liquefied petroleum gas fuel; $Density_{NMHC}$=1.1771(12.011+H/C(1.008))g/ft^3-carbon atom (0.04157(12.011+H/C(1.008))kg/m^3-carbon atom), where H/C is the hydrogen to carbon ratio of the non-methane hydrocarbon components of the test fuel, at 68 °F (20 °C) and 760 mm Hg (101.3 kPa) pressure.

(iii)(A) CH_{4conc} = Methane concentration of the dilute exhaust sample corrected for background, in ppm carbon equivalent.

(B) $CH_{4conc} = CH_{4e} - CH_{4d}(1 - 1/DF)$

Where:

(iv) CH_{4e} = Methane exhaust bag concentration in ppm carbon equivalent.

(v) CH_{4d} = Methane concentration of the dilution air in ppm carbon equivalent.

(vi) r_{CH4}=HC FID response to methane for natural gas-fueled vehicles as measured in § 86.121(d). For all other vehicles r_{CH4}=1.

(9)(i) CH_{4mass}=Methane emissions, in grams per test phase.

(ii) $Density_{CH4}$=Density of methane is 18.89 g/ft^3-carbon atom (0.6672 kg/m^3-carbon atom), at 68 °F (20 °C) and 760 mm Hg (101.3 kPa) pressure.

(d) For petroleum-fueled vehicles, example calculation of mass values of exhaust emissions using positive displacement pump:

(1) For the ''transient'' phase of the cold start test assume the following: V_o = 0.29344 ft^3rev; N = 10,485; R = 48.0 pct; R_a = 48.2 percent; P_B = 762 mm Hg; P_d = 22.225 mm Hg; P_4 = 70 mm Hg; T_p = 570 °R; HC_e = 105.8 ppm, carbon equivalent; NOx_e = 11.2 ppm; CO_{em} = 306.6 ppm; CO_{2e} = 1.43 percent; CH_{4e} = 10.74 ppm; HC_d = 12.1 ppm; NOx_d = 0.8 ppm; CO_{dm} = 15.3 ppm; CO_{2d} = 0.032 percent; CH_{4d} = 2.20 ppm; D_{ct} = 3.598 miles.

Then:

(i) V_{mix} = (0.29344)(10,485)(762-70)(528)/(760)(570) = 2595.0 ft^3 per test phase.

(ii) H = (43.478)(48.2)(22.225)/762 − (22.225)(48.2/100) = 62 grains of water per pound of dry air.

(iii) K_H = 1/[1 − 0.0047(62-75)] = 0.9424.

(iv) CO_e = [1-0.01925(1.43) − 0.000323(48)](306.6) = 293.4 ppm.

(v) CO_d = [1 − 0.000323(48)](15.3) = 15.1 ppm.

(vi) DF = 13.4/[1.43 + 10^{-4}(105.8 + 293.4)] = 9.116.

(vii) HC_{conc} = 105.8-12.1(1 − 1/9.116) = 95.03 ppm.

(viii) HC_{mass} = (2595)(16.33)(95.03/1,000,000) = 4.027 grams per test phase.

(ix) NOx_{conc} = 11.2 − 0.8(1 − 1/9.116) = 10.49 ppm.

(x) NOx_{mass} = (2595)(54.16)(10.49/1,000,000)(0.9424) = 1.389 grams per test phase.

(xi) CO_{conc} = 293.4 − 15.1(1 − 1/9.116) = 280.0 ppm.

(xii) CO_{mass} = (2595)(32.97)(280/1,000,000) = 23.96 grams per test phase.

(xiii) CO_{2conc} = 1.43 − 0.032(1 − 1/9.116) = 1.402 percent.

(xiv) CO_{2mass} = (2595.0)(51.85)(1.402/100) = 1886 grams per test phase.

(xv) CH_{4conc} = 10.74 − 2.2 (1 − 1/9.116) = 8.78 ppm.

(xvi) $NMHC_{conc}$ = 95.03 − 8.78 = 86.25 ppm.

(xvii) $NMHC_{mass}$ = (2595)(16.33)(86.25)/1,000,000 = 3.655 grams per test phase.

(2) For the stabilized portion of the cold start test assume that similar calculations resulted in the following:

(i) HC_{mass} = 0.62 gram per test phase.

(ii) NOx_{mass} = 1.27 grams per test phase.

(iii) CO_{mass} = 5.98 grams per test phase.

(iv) CO_{2mass} = 2346 grams per test phase.

(v) D_s = 3.902 miles.

(vi) $NMHC_{mass}$ = 0.50 gram per test phase.

(3) For the ''transient'' portion of the hot start test assume that similar calculations resulted in the following:

(i) HC_{mass} = 0.51 gram per test phase.

(ii) NOx_{mass} = 1.38 grams per test phase.

(iii) CO_{mass} = 5.01 grams per test phase.

(iv) CO_{2mass} = 1758 grams per test phase.

(v) D_{ht} = 3.598 miles.

(vi) $NMHC_{mass}$ = 0.44 grams per test phase.

(4) Weighted mass emission results:

(i) HC_{wm} = 0.43[(4.027 + 0.62)/(3.598 + 3.902)] + 0.57[(0.51 + 0.62)/(3.598 + 3.902)] = 0.352 gram per vehicle mile.

(ii) NOx_{wm} = 0.43[(1.389 + 1.27)/(3.598 + 3.902)] + 0.57[(1.38 + 1.27)/(3.598 + 3.902)] = 0.354 gram per vehicle mile.

(iii) CO_{wm} = 0.43[(23.96 + 5.98)/(3.598 + 3.902)] + 0.57[(5.01 + 5.98)/(3.598 + 3.902)] = 2.55 grams per vehicle mile.

(iv) CO_{2wm} = 0.43[(1886 + 2346)/(3.598 + 3.902) + 0.57[(1758 + 2346)/(3.598 + 3.902)] = 555 gram per vehicle mile.

(v) $NMHC_{wm}$ = 0.43[(3.655 + 0.50)/(3.598 + 3.902)] + 0.57[(0.44 + 0.50)/(3.598 + 3.902)] = 0.310 gram per vehicle mile.

(e) For methanol-fueled vehicles with measured fuel composition of $CH_{3.487}O_{0.763,}$ example calculation of exhaust emissions using positive displacement pump:

(1) For the ''transient'' phase of the cold start test assume the following: V_0=0.29344 ft^3 rev; N=25,801; R=37.5 pct; Ra=37.5 percent; P_B=725.42 mm Hg; P_d=22.02 mm Hg; P_4=70 mm Hg; T_p 570 deg.R; FID HC_e=14.65 ppm, carbon equivalent; r=0.788; T_{EM}=527.67 deg.R; V_{EM}=0.2818 ft^3; C_{S1}=7.101; AV_{S1}=15.0 ml; C_{S2}=0.256; AV_{S2}=15.0 ml; T_{DM}=527.67 deg.R; V_{DM}=1.1389 ft^3; C_{D1}=0.439; AV_{D1}=15.0 ml; C_{D2}=0.0; AV_{D2}=15.0 ml; C_{FDE}=8.970 μ g/ml; V_{AE}=5.0 ml; Q=0.1429; T_{EF}=527.67 deg.R; V_{SE}=0.2857 ft^3; C_{FDA}=0.39 μ g/ml; V_{AA}=5.0 ml; T_{DF}=527.67 deg.R; V_{SA}=1.1043 ft^3; NOx_e=5.273 ppm; CO_{em}=98.8 ppm; CO_{2e}=0.469 pct; CH_{4e}=2.825 ppm; FID HC_d=2.771 ppm; NOx_d=0.146 ppm; CO_{dm}=1.195 ppm; CO_{2d}=0.039 percent; CH_{4d}=2.019 ppm; Dct=3.583 miles.(Q P='04'≤

Then:

(i) V_{mix}=(0.29344)(25,801)(725.42–70)(528)/(760)(570)=6048.1.0 ft^3 per test phase.

(ii) H=(43.478)(37.5)(22.02)/[725.42-(22.02x37.5/100)]=50 grains of water per pound of dry air.

(iii) K_H=1/[1–0.0047(50–75)]=0.8951.

(iv) CO_e=[1-(0.01+0.005×3.487)×0.469) − 0.000323(37.5)) ×98.8=96.332 ppm.

(v) CO_d=(1–0.000323(37.5))×1.195=1.181 ppm.

(vi) C_{CH3OHe} = $(3.813\times10^{-2})(527.67)[(7.101)(15.0) + (0.256)(15.0)]/(725.42)(0.2818)$ = 10.86 ppm.

(vii) HCe=14.65 − (0.788)(10.86)=6.092.

(viii) DF = 100(1/[1 + (3.487/2) + 3.76(1 + (3.487/4) − (0.763/2))])/0.469 + (6.092 + 96.332 + 10.86 + 0.664)(10^{-4}) = 24.939.

(ix) C_{CH3OHd} = $(3.813 \times 10^{-2})(527.67)[(0.439)(15.0) + (0.0)(15.0)]/(725.42)(1.1389)$ = 0.16 ppm.

(x) CH_3OH_{conc}=10.86 − 0.16(1–1/24.939)=10.71 ppm.

(xi) CH_3OH_{mass}=6048.1×37.71×(10.71/1,000,000)=2.44 grams per test phase.

(xii) HC_{conc}=[14.65 − (0.788)(10.86)] − [2.771 − (0.788)(0.16)] (1–1/24.94)=3.553 ppm.

(xiii) HC_{mass}=(6048.1)(16.33)(3.553/1,000,000)=0.35 grams per test phase.

(xiv) C_{HCHOe} = $4.069 \times 10^{-2}(8.970)(5.0)(0.1429)(527.67)/(0.2857)(725.42)$ = 0.664 ppm.

(xv) C_{HCHOd} = $4.069 \times 10^{-2}(0.39)(5.0)(0.1429)(527.67)/(1.1043)(725.42)$ = 0.0075 ppm.

(xvi) $HCHO_{conc}$=0.664–0.0075(1–1/24.939)=0.6568 ppm.

(xvii) $HCHO_{mass}$=(6048.1)(35.36)(0.6568/1,000,000)=0.1405 grams per test phase.

(xviii) THCE=0.35+(13.8756/32.042)(2.44)+(13.8756/ 30.0262)(0.1405)=1.47 grams per test phase.

(xix) NO_{Xconc}=5.273 − (0.146)(1–1/24.939)=5.13 ppm.

(xx) NO_{Xmass}=(6048.1)(54.16)(5.13/1,000,000)(0.8951)=1.505 grams per test phase.

(xxi) CO_{conc}=96.332 − 1.181(1–1/24.939)=95.2 ppm.

(xxii) CO_{mass}=(6048.1)(32.97)(95.2/1,000,000)=18.98 grams per test phase.

(xxiii) $CO2_{conc}$=0.469–0.039(1–1/24.939)=0.432 percent.

(xxiv) $CO2_{mass}$=(6048.1)(51.85)(0.432/100)=1353 grams.

(xxv) $CH4_{conc}$=2.825–2.019(1–1/24.939)=0.89 ppm.

(xxvi) $NMHC_{conc}$=3.553 ppm − 0.89 ppm=2.67 ppm.

(xxvii) $NMHC_{mass}$=(6048.1)(16.33)(2.67/1,000,000)=0.263 grams per test phase.

(xxviii) $NMHCE_{mass}$=0.263+(13.8756/32.042)(2.44)+(13.8756/ 30.0262)(0.1405)=1.39 grams per test phase.

(2) For the stabilized portion of the cold start test assume that similar calculations resulted in the following:

(i) THCE=0.143 grams per test phase.

(ii) NOX_{mass}=0.979 grams per test phase.

(iii) CO_{mass}=0.365 grams per test phase.

(iv) CO_{2mass}=1467 grams per test phase.

(v) D_s=3.854 miles.

(vi) NMHCE=0.113 grams per test phase.

(3) For the ''transient'' portion of the hot start test assume that similar calculations resulted in the following:

(i) THCE=0.488 grams as carbon equivalent per test phase.

(ii) NOX_{mass}=1.505 grams per test phase.

(iii) CO_{mass}=3.696 grams per test phase.

(iv) CO_{2mass}=1179 grams per test phase.

(v) D_{ht}=3.577 miles.

(vi) NMHCE=0.426 grams per test phase.

(4) Weighted emission results:

(i) $THCE_{wm}$ = (0.43) × (1.473 + 0.143)/(3.583 + 3.854) + (0.57) × (0.488 + 0.143)/(3.577 + 3.854) = 0.142 grams as carbon equivalent per mile.

(ii) NOx_{wm} = (0.43) × (1.505 + 0.979)/(3.583 + 3.854) + (0.57) × (1.505 + 0.979)/3.577 + 3.854) = 0.344 grams per mile.

(iii) CO_{wm} = (0.43) × (18.983 + 0.365)/(3.583 + 3.854) + (0.57) × (3.696 + 0.365)/(3.577 + 3.854) = 1.43 grams per mile.

(iv) $CO2_{wm}$ = (0.43) × (1353 + 1467)/(3.583 + 3.854) + (0.57) × (1179 + 1467)/(3.577 + 3.854) = 366 grams per mile.

(v) $NMHCE_{wm}$ = (0.43) × (1.386 + 0.113)/(3.583 + 3.854) + (0.57) × (0.426 + 0.113)/(3.577 + 3.854) = 0.128 grams per mile.

[56 FR 25777, June 5, 1991, as amended at 59 FR 39649, Aug. 3, 1994; 59 FR 48511, Sept. 21, 1994; 60 FR 34349, June 30, 1995; 62 FR 47122, Sept. 5, 1997]

§ 86.145–82 Calculations; particulate emissions.

(a) The final reported test results for the mass particulate (M_p) in grams/mile shall be computed as follows.

$$M_p = 0.43(M_{p1} + M_{p2})/(D_{ct} + D_s) + 0.57(M_{p3} + M_{p2})/(D_{ht} + D_s)$$

where:

(1) M_{p1} = Mass of particulate determined from the ''transient'' phase of the cold start test, in grams per test phase. (See § 86.110–82(c)(1) for determination.)

(2) M_{p2} = Mass of particulate determined from the ''stabilized'' phase of the cold start test, in grams per test phase. (See § 86.110–82(c)(1) for determination.)

(3) M_{p3} = Mass of particulate determined from the ''transient'' phase of the hot start test, in grams per test phase. (See § 86.110–82(c)(1) for determination).

(4) D_{ct} = The measured driving distance from the ''transient'' phase of the cold start test, in miles.

(5) D_s = The measured driving distance from the ''stabilized'' phase of the cold start test, in miles.

(6) D_{ht} = The measured driving distance from the ''transient'' phase of the hot start test, in miles.

(b) The mass of particulate for each phase of testing is determined as follows:

$$M_{pj} = \left[V_{mix} + V_{epi}\right]\left[\frac{P_{ei}}{V_{epi}} - \frac{P_b}{V_{bp}}(1 - 1/DF)\right]$$

where:

(1) j = 1, 2 or 3 depending on which phase the mass of particulate is being determined for (i.e., the ''transient'' phase of the cold start test, the ''stabilized'' phase of the cold start test, or the ''transient'' phase of the hot start test).

(2) V_{mix} = Total dilute exhaust volume in cubic meters per test, corrected

to standard conditions 528°R (293K) and 29.92 in Hg (101.3 kPa). V_{mix} is further defined in § 86.144.

(3) P_e = mass of particulate per test on the exhaust filter(s), grams.

(4) P_b = mass of particulate on the ''background'' filter, grams.

(i) The background particulate level, P_b, inside the dilution air filter box at EPA is very low. P_b will be assumed = 0, and background particulate samples will not be taken with each exhaust sample. It is recommended that background particulate checks be made periodically to verify the low level.

(ii) Any manufacturer may make the same assumption without prior EPA approval.

(iii) If P_b is assumed = 0, then no background correction is made. The equation for particulate mass emissions then reduces to:

$$M_{pj} = \frac{V_{mix_i} + V_{ep_i} \times P_{e_i}}{V_{ep_i}}$$

(6) V_{ep} = total volume of sample pulled through the filter, cubic feet at standard conditions.

$$V_{ep} = \frac{V_{ap} \times \left(P_{bar} + P_{ip}\right) \times 528}{T_{ip} \times 29.92}$$

where:

(i) V_{ap} = corrected (according to procedure specified in § 85.120) dilute exhaust sample volume, cubic feet.

(ii) P_{bar} = barometric pressure, in Hg.

(iii) P_{ip} = pressure elevation above ambient measured at the inlet to the dilute exhaust sample gas meter or flow instrument, in Hg. (For most gas meters with unrestricted discharge P_{ip} is negligible and can be assumed = 0.)

(iv) T_{ip} = average temperature of the dilute exhaust sample at the inlet to the gas meter or flow instrument, °R.

(7) V_{bp} = total volume of the background sample, cubic feet at standard conditions. (V_{bp} is not required if P_b is assumed = 0.) It is calculated using the following formula:

$$V_{bp} = \frac{V_{ap} \times \left(P_{bar} + P_{ib}\right) \times 528}{T_{ib} \times 29.92}$$

where:

(i) V_{ab} = corrected (according to procedure specified in § 85.120) background sample volume, cubic feet.

(ii) P_{bar} = barometric pressure, in. Hg.

(iii) P_{ib} = pressure elevation above ambient measured at the inlet to the background gas meter or flow instrument, in Hg. (For most gas meters with unrestricted discharge P_{ib} is negligible and can be assumed = 0.)

(iv) T_{ib} = average temperature of the background sample at the inlet to the gas meter or flow instrument, °R.

(8) DF = dilution factor. (DF is not required if P_b is assumed = 0.)

[45 FR 14523, Mar. 5, 1980, as amended at 46 FR 50494, Oct. 13, 1981, and 47 FR 49807, Nov. 2, 1982]

§ 86.146–96 Fuel dispensing spitback procedure.

(a) The vehicle is fueled at a rate of 10 gal/min to test for fuel spitback emissions. All liquid fuel spitback emissions that occur during the test are collected in a bag made of a material impermeable to hydrocarbons or methanol. The bag shall be designed and used so that liquid fuel does not spit back onto the vehicle body, adjacent floor, etc., and it must not impede the free flow of displaced gasoline vapor from the orifice of the filler pipe. The bag must be designed to permit passage of the dispensing nozzle through the bag. If the bag has been used for previous testing, sufficient time shall be allowed for the bag to dry out. The dispensing nozzle shall be a commercial model, not equipped with vapor recovery hardware.

(b) Ambient temperature levels encountered by the test vehicle shall be not less than 68 °F nor more than 86 °F. The temperatures monitored during testing must be representative of those experienced by the test vehicle. The vehicle shall be approximately level during all phases of the test sequence to prevent abnormal fuel distribution.

(c) Measure and record the mass of the bag to be used for collecting spitback emissions to the nearest 0.01 gram.

(d) Drain the fuel tank(s) and fill with test fuel, as specified in § 86.113, to 10 percent of the reported nominal fuel

tank capacity. The fuel cap(s) shall be installed immediately after refueling.

(e) The vehicle shall be soaked at 80±6 °F (27±3 °C) for a minimum of six hours, then placed, either by being driven or pushed, on a dynamometer and operated through one Urban Dynamometer Driving Schedule (specified in § 86.115 and appendix I of this part). The test vehicle may not be used to set dynamometer horsepower.

(f) Following the preconditioning drive, the vehicle shall be moved or driven at minimum throttle to the refueling area.

(g) All areas in proximity to the vehicle fuel fill orifice and the dispenser nozzle itself shall be completely dry of liquid fuel.

(h) The fuel filler neck shall be snugly fitted with the vented bag to capture any fuel emissions. The fuel nozzle shall be inserted through the bag into the filler neck of the test vehicle to its maximum penetration. The plane of the nozzle's handle shall be perpendicular to the floor of the laboratory.

(i) The fueling procedure consists of dispensing fuel through a nozzle, interrupted by a series of automatic shutoffs. A minimum of 3 seconds shall elapse between any automatic shutoff and subsequent resumption of dispensing. Dispensing may not be manually terminated, unless the test vehicle has already clearly failed the test. The vehicle shall be fueled according to the following procedure:

(1) The fueling operation shall be started within 4 minutes after the vehicle is turned off and within 8 minutes after completion of the preconditioning drive. The average temperature of the dispensed fuel shall be 65±5 °F (18±3 °C).

(2) The fuel shall be dispensed at a rate of 9.8±0.3 gallons/minute (37.1±1.1 L/min) until the automatic shutoff is activated.

(3) If the automatic shutoff is activated before the nozzle has dispensed an amount of fuel equal to 70 percent of the tank's nominal capacity, the dispensing may be resumed at a reduced rate. Repeat as necessary until the nozzle has dispensed an amount of fuel equal to at least 70 percent of the tank's nominal capacity.

(4) Once the automatic shutoff is activated after the nozzle has dispensed an amount of fuel equal to 70 percent of the tank's nominal capacity, the fuel shall be dispensed at a rate of 5±1 gallons/minute (19±4 ℓ/min) for all subsequent dispensing. Dispensing shall be restarted two additional times.

(5) If the nozzle has dispensed an amount of fuel less than 85 percent of the tank's nominal capacity after the two additional dispensing restarts, dispensing shall be resumed, and shall continue through as many automatic shutoffs as necessary to achieve this level. This completes the fueling procedure.

(j) Withdraw the nozzle from the vehicle and the bag, holding the tip of the nozzle upward to avoid any dripping into the bag.

(k) Within 1 minute after completion of the fueling event, the bag shall be folded to minimize the vapor volume inside the bag. The bag shall be folded as quickly as possible to prevent evaporation of collected emissions.

(l) Within 5 minutes after completion of the fueling event, the mass of the bag and its contents shall be measured and recorded (consistent with paragraph (c) of this section). The bag shall be weighed as quickly as possible to prevent evaporation of collected emissions.

[58 FR 16045, Mar. 24, 1993, as amended at 60 FR 43898, Aug. 23, 1995]

§ 86.150–98 Refueling test procedure; overview.

(a) The refueling emissions test procedure described in this and subsequent sections is used to determine the conformity of vehicles with the refueling emissions standards set forth in subpart A of this part for light-duty vehicles and light-duty trucks. The refueling emissions test procedure may be performed as an individual test or in combination with the evaporative and exhaust emissions test sequences of § 86.130–96.

(b) The refueling emissions test is designed to measure hydrocarbon emissions resulting from the generation or displacement of fuel tank vapor during vehicle refueling. The refueling emissions shall be measured by the enclosure technique.

(c) All emission control systems installed on or incorporated in a new

motor vehicle shall be functioning during all procedures in this subpart except:

(1) In cases of component malfunction or failure; and

(2) during certain specified fuel drain and fill operations, at which times the refueling emission control canister is disconnected. Maintenance to correct component malfunction or failure shall be authorized in accordance with §86.098–25.

(d) *For liquefied petroleum gas-fueled vehicles only*. Refueling test procedures for light-duty vehicles and light-duty trucks operated on liquefied petroleum gas are described in §86.157.

[59 FR 16296, Apr. 6, 1994, as amended at 59 FR 48511, Sept. 21, 1994]

§86.151–98 General requirements; refueling test.

(a) The refueling emissions procedure, shown in Figure B98–12, starts with the stabilizing of the vehicle and the loading of the refueling emissions canister(s) to breakthrough, and continues with the vehicle drive for purging of the canister, followed by the refueling emissions measurement. The test is conducted following §§86.152–98 through 86.154–98 in order.

(b) Ambient temperature levels encountered by the test vehicle throughout the test sequence shall not be less than 68 °F (20 °C) nor more than 86 °F (30 °C).

(c) The vehicle shall be approximately level during all phases of the test sequence to prevent abnormal fuel distribution.

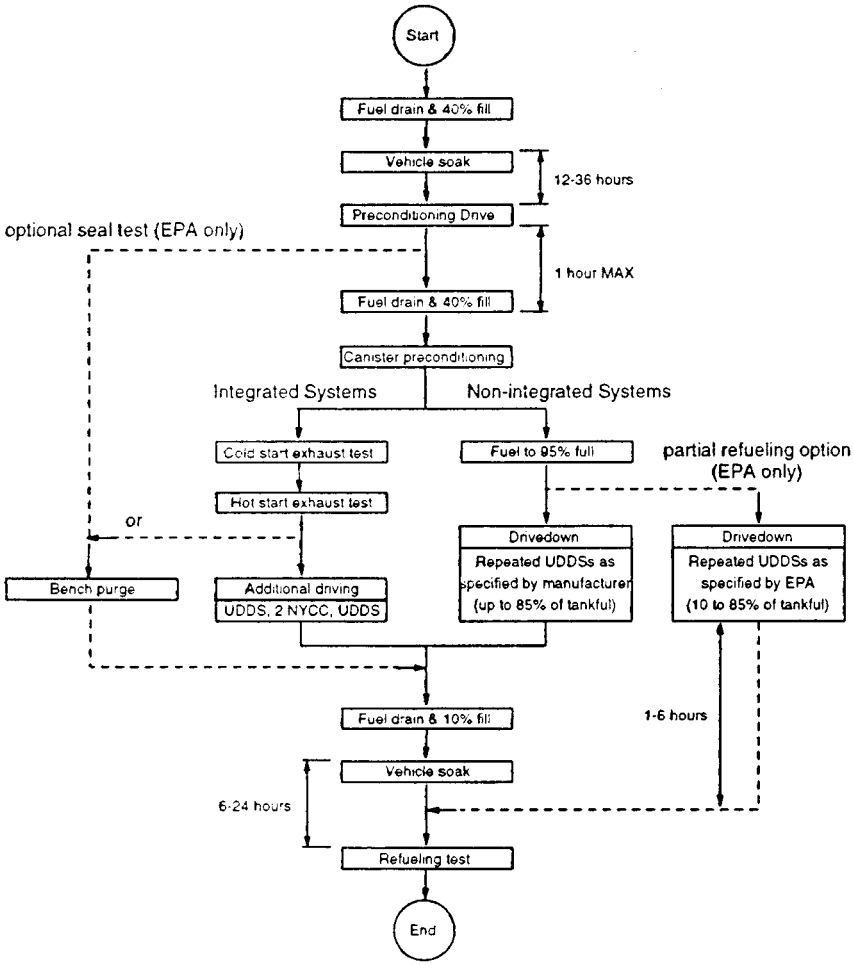

Figure B98-12: Refueling Test Sequence

[59 FR 16296, Apr. 6, 1994]

§ 86.152–98 Vehicle preparation; refueling test.

(a) Provide additional fittings and adapters, as required, to accommodate a fuel drain at the lowest point possible in the tank(s) as installed on the vehicle. The canister shall not be removed from the vehicle, unless access to the canister in its normal location is so restricted that purging and loading can only reasonably be accomplished by removing the canister from the vehicle. Special care shall be taken during this step to avoid damage to the components and the integrity of the fuel system. A replacement canister may be temporarily installed during the soak period while the canister from the test vehicle is preconditioned.

(b) Provide valving or other means to allow the venting of the refueling vapor line to the atmosphere rather than to the refueling emissions canister(s) when required by this test procedure.

(c) For preconditioning that involves loading the vapor collection canister(s) with butane, provide valving or other means as necessary to allow loading of the canister(s).

[59 FR 16298, Apr. 6, 1994, as amended at 60 FR 43898, Aug. 23, 1995]

§86.153–98 Vehicle and canister preconditioning; refueling test.

(a) *Vehicle and canister preconditioning.* Vehicles and vapor storage canisters shall be preconditioned in accordance with the preconditioning procedures for the supplemental two-diurnal evaporative emissions test specified in §86.132–96 (a) through (j). For vehicles equipped with non-integrated refueling emission control systems, the canister must be loaded using the method involving butane loading to breakthrough (see §86.132–96(j)(1)).

(b) *Seal test.* The Administrator may choose to omit certain canister load and purge steps, and replace them with a bench purge of the refueling canister(s), in order to verify the adequacy of refueling emission control system seals. Failure of this seal test shall constitute a failure of the refueling emission control test. For integrated systems, this bench purge may be performed after the exhaust testing in order to obtain exhaust emission test results. Non-integrated system seal testing shall be performed using paragraph (b)(1) of this section.

(1) *Without the exhaust emission test.* The Administrator may conduct the canister preconditioning by purging the canister(s) with at least 1200 canister bed volumes of ambient air (with humidity controlled to 50±25 grains of water vapor per pound of dry air) maintained at a nominal flow rate of 0.8 cfm directly following the preconditioning drive described in §86.132–96 (c) through (e). In this case, the canister loading procedures and the vehicle driving procedures described in §86.132–96 (f) through (j) and in paragraphs (c) through (d) of this section shall be omitted, and the 10 minute and 60 minute time requirements of paragraph (e) of this section shall apply to time after completion of the bench purge. In the case of multiple refueling canisters, each canister shall be purged separately.

(2) *With the exhaust emission test.* The Administrator may conduct the canister preconditioning by purging the canister(s) directly after the exhaust test (see paragraph (c)(1) of this section). The canister shall be purged with at least 1200 canister bed volumes of ambient air (with humidity controlled to 50±25 grains of water vapor per pound of dry air) maintained at a nominal flow rate of 0.8 cfm. In this case, the vehicle driving procedures described in paragraphs (c)(2) through (d) of this section shall be omitted, and the 10 minute and 60 minute time requirements of paragraph (e) of this section shall apply to time after completion of the bench purge. In the case of multiple refueling canisters, each canister shall be purged separately.

(c) *Canister purging; integrated systems.* (1) Vehicles to be tested for exhaust emissions only shall be processed according to §§86.135–94 through 86.137–96. Vehicles to be tested for refueling emissions shall be processed in accordance with the procedures in §§86.135–94 through 86.137–96, followed by the procedures outlined in paragraph (c)(2) of this section.

(2) To provide additional opportunity for canister purge, conduct additional driving on a dynamometer, within one hour of completion of the hot start exhaust test, by operating the test vehicle through one UDDS, a 2 minute idle, two NYCCs, another 2 minute idle, another UDDS, then another 2 minute idle (see §86.115–78 and appendix I of this part). Fifteen seconds after the engine starts, place the transmission in gear. Twenty seconds after the engine starts, begin the initial vehicle acceleration of the driving schedule. The transmission shall be operated according to the specifications of §86.128–79 during the driving cycles. The vehicle's air conditioner (if so equipped) shall be turned off. Ambient temperature shall be controlled as specified in §86.151–98. It is not necessary to monitor and/or control in-tank fuel temperatures.

(i) The fixed-speed fan specified in §86.135–94(b) may be used for engine cooling. If a fixed-speed fan is used, the vehicle's hood shall be opened.

(ii) Alternatively, the roadspeed-modulated fan specified in §86.107–96(d)(1) may be used for engine cooling.

If a road-speed modulated fan is used, the vehicle's hood shall be closed.

(d) *Canister purging; non-integrated systems.* Within one hour of completion of canister loading to breakthrough, the fuel tank(s) shall be further filled to 95 percent of nominal tank capacity determined to the nearest one-tenth of a U.S. gallon (0.38 liter) with the fuel specified in § 86.113–94. During this fueling operation, the refueling emissions canister(s) shall be disconnected. Following completion of refueling, the refueling emissions canister(s) shall be reconnected. Special care shall be taken during this step to avoid damage to the components and the integrity of the fuel system. Vehicle driving to purge the refueling canister(s) shall be performed using either the chassis dynamometer procedure or the test track procedure, as described in paragraphs (d)(1) and (d)(2) of this section. The Administrator may choose to shorten the vehicle driving for a partial refueling test as described in paragraph (d)(3) of this section. For vehicles equipped with dual fuel tanks, the required volume of fuel shall be driven out of one tank, the second tank shall be selected as the fuel source, and the required volume of fuel shall be driven out of the second tank.

(1) *Chassis dynamometer procedure.* (i) Vehicle driving on a chassis dynamometer shall consist of repeated drives with the UDDS until 85 percent of fuel tank capacity has been consumed. Driving in testing performed by manufacturers may be terminated before 85 percent of the fuel tank capacity has been consumed, provided that driving is not terminated partway through a UDDS cycle. Driving in testing performed by the Administrator may be terminated after the same number of UDDS cycles as driven in the manufacturer's certification testing.

(ii) Except with the advance approval of the Administrator, the number of UDDSs required to consume 85 percent of tank fuel capacity (total capacity of both tanks when the vehicle is equipped with dual fuel tanks) shall be determined from the fuel economy on the UDDS applicable to the test vehicle and from the number of gallons to the nearest 0.1 gallon (0.38 liter) that constitutes 85 percent of tank volume. If this ''fuel consumed point'' occurs partway through a UDDS cycle, the cycle shall be completed in its entirety.

(iii) For vehicles equipped with dual fuel tanks, fuel switching from the first tank to the second tank shall occur at the 10 percent volume of the first tank regardless of the point in the UDDS cycle at which this occurs.

(iv) If necessary to accommodate work schedules, the engine may be turned off and the vehicle parked on the dynamometer. The vehicle may be parked off of the dynamometer to facilitate maintenance or repairs if required.

(v) During the driving on the dynamometer, a cooling fan(s) shall be positioned as described in § 86.135–94(b).

(2) *Test track procedure.* (i) Vehicle driving on a test track shall consist of repeated drives with the UDDS until 85 percent of fuel tank capacity has been consumed. Driving performed by manufacturers may be terminated before 85 percent of the fuel tank capacity has been consumed, provided that driving is not terminated partway through a UDDS cycle. Driving performed by the Administrator may be terminated after the same number of UDDS cycles as driven in the manufacturer's certification testing.

(ii) If the distance from the emission laboratory to the test track is less than 5 miles (8.05 km) the vehicle may be driven to the test track at a speed not to exceed 25 mph. If the distance is greater than 5 miles (8.05 km) the vehicle shall be moved to the test track with the engine off.

(iii) Except with the advance approval of the Administrator, the number of UDDSs required to consume 85 percent of tank fuel capacity (total capacity of both tanks when the vehicle is equipped with dual fuel tanks) shall be determined from the fuel economy on the UDDS applicable to the test vehicle and from the number of gallons to the nearest 0.1 gallon (0.38 liter) that constitutes 85 percent of tank volume. If this ''fuel consumed point'' occurs partway through a UDDS cycle, the cycle shall be completed in its entirety.

(iv) The vehicle shall be driven at a speed not to exceed 25 mph from the

test track to the laboratory provided the distance from the test track to the laboratory does not exceed 5 miles (8.05 km). If the distance from the test track to the emission laboratory is greater than 5 miles (8.05 km) the vehicle shall be moved from the test track with the engine off.

(v) For vehicles equipped with dual fuel tanks, fuel switching from the first tank to the second tank shall occur at the 10 percent volume of the first tank regardless of the point in the UDDS cycle at which this occurs.

(vi) If necessary to accommodate work schedules, the engine may be turned off and the vehicle parked on the test track. The vehicle may be parked off of the test track to facilitate maintenance or repairs if required. If the vehicle is moved from the test track, it shall be returned to the track with the engine off when mileage accumulation is to be resumed.

(3) *Drive schedule for partial refueling test.* The Administrator may conduct a partial refueling test involving a shortening of the drive procedures described in paragraphs (d) (1) and (2) of this section and a modified soak and refueling procedure as described in paragraph (e) of this section and §86.154–98(e)(7)(i). The drive shall be performed as described in paragraph (d) (1) or (2) of this section except that the drive shall be terminated when at least 10 percent but no more than 85 percent of the fuel tank nominal capacity has been consumed and not partway through a UDDS cycle. The amount of fuel consumed in the drive shall be determined by multiplying the number of UDDSs driven by the mileage accumulated per UDDS and dividing by the fuel economy for the UDDS applicable to the test vehicle.

(e) *Vehicle cool down*—(1) *Partial refueling test.* If the Administrator is conducting the non-integrated system partial refueling test, after the driving procedure specified in paragraph (d)(3) of this section, the vehicle shall be parked (without starting the engine) and soaked at 80±3 °F (27±1.7 °C) for a minimum of 1 hour and a maximum of 6 hours.

(2) *For all other refueling emission tests.* Within 10 minutes of completion of refueling emissions canister stabilization (see paragraph (c) or (d) of this section), the refueling emissions canister(s) shall be disconnected. Within 60 minutes of completion of refueling emissions canister stabilization (see paragraph (c) or (d) of this section), the vehicle fuel tank(s) shall be drained, the fuel tank(s) fueled to 10 percent of nominal tank capacity determined to the nearest one-tenth of a U.S. gallon (0.38 liter) with the specified fuel, and the vehicle parked (without starting the engine) and soaked at 80±3 °F (27±1.7 °C) for a minimum of 6 hours and a maximum of 24 hours.

[59 FR 16298, Apr. 6, 1994, as amended at 60 FR 43898, Aug. 23, 1995]

§86.154–98 Measurement procedure; refueling test.

(a) The refueling test measurement procedure described in this section immediately follows the vehicle and canister preconditioning described in §86.153–98.

(b) The refueling emission enclosure shall be purged for several minutes immediately prior to the test. Warning: If at any time the concentration of hydrocarbons, of methanol, or of methanol and hydrocarbons exceeds 15,000 ppm C, the enclosure should be immediately purged. This concentration provides a 4:1 safety factor against the lean flammability limit.

(c)(1) The FID (or HFID) hydrocarbon analyzer, and additional analyzer, if needed, shall be zeroed and spanned immediately prior to the test.

(2) For methanol-fueled vehicles only, impingers charged with known volumes of pure deionized water shall be placed in the methanol sampling system.

(d) If not already on, the enclosure mixing fan and the spilled fuel mixing blower shall be turned on at this time.

(e) The refueling emission measurement portion of the refueling test shall be performed as follows:

(1) The line from the fuel tank(s) to the refueling emissions canister(s) shall be connected.

(2) The test vehicle, with the engine shut off, shall be moved into the enclosure. The test vehicle windows and luggage compartment shall be opened if not already open.

(3) An electrical ground shall be attached to the vehicle. The vehicle fuel filler cap shall be removed and the enclosure door shall be closed and sealed within two minutes of cap removal. The FID (or HFID) trace shall be allowed to stabilize.

(4) The dispensed fuel temperature recording system shall be started.

(5)(i) Within 10 minutes of closing and sealing the doors, analyze enclosure atmosphere for hydrocarbons and record. This is the initial (time=0 minutes) hydrocarbon concentration, C_{HCi}, required in § 86.143–96.

(ii) For methanol-fueled vehicles only, measure the initial concentration of methanol as described in § 86.133–96(i)(6).

(6) Within one minute of obtaining the initial FID (or HFID) reading, and methanol reading if applicable, the fuel nozzle shall be inserted into the filler neck of the test vehicle, to its maximum penetration, and the refueling operation shall be started. The plane of the nozzle's handle shall be approximately perpendicular to the floor of the laboratory. The fuel shall be dispensed at a temperature of 67±1.5 °F (19.4±0.8 °C) and at a dispensing rate of 9.8±0.3 gal/min (37.1±1.1 liter/min). In testing conducted by the Administrator, a lower dispensing rate (no lower than 4.0 gal/min (15.1 liter/min)) may be used.

(7)(i) *Partial refueling test.* If the Administrator conducts the non-integrated system partial refueling test, the fuel flow shall continue until the amount of fuel pumped is equal to the fuel consumed during the driving, as determined in accordance with § 86.153–98(d)(3). The final volume of fuel dispensed must be within one-tenth of a U.S. gallon (0.38 liter) of the targeted amount. If automatic nozzle shut-off occurs prior to this point, the nozzle shall be reactivated within 15 seconds and fuel dispensing continued as needed. A minimum of 3 seconds shall elapse between any automatic shutoff and subsequent resumption of dispensing.

(ii) *For all other refueling tests.* The fuel flow shall continue until the refueling nozzle automatic shut-off is activated. The amount of fuel dispensed must be at least 85 percent of nominal fuel tank volume, determined to the nearest one-tenth of a U.S. gallon (0.38 liter). If automatic nozzle shut-off occurs prior to this point, the nozzle shall be reactivated within 15 seconds and fuel dispensing continued as needed. A minimum of 3 seconds shall elapse between any automatic shutoff and subsequent resumption of dispensing. Dispensing may not be manually terminated, unless the test vehicle has already clearly failed the test.

(8)(i) The final reading of the evaporative enclosure FID analyzer shall be taken 60±5 seconds following the final shut-off of fuel flow. This is the final hydrocarbon concentration, C_{HCf}, required in § 86.143–96. The elapsed time, in minutes, between the initial and final FID (or HFID) readings shall be recorded.

(ii) *For methanol-fueled vehicles only.* Measure the final concentration of methanol as described in § 86.133–96(m)(2).

(9) For vehicles equipped with more than one fuel tank, the procedures described in this section shall be performed for each fuel tank.

[59 FR 16299, Apr. 6, 1994, as amended at 60 FR 43898, Aug. 23, 1995]

§ 86.155–98 Records required; refueling test.

The following information shall be recorded with respect to each test:

(a) Test number.

(b) System or device tested (brief description).

(c) Date and time of day.

(d) Instrument operated.

(e) Operator.

(f) Vehicle: ID number, manufacturer, model year, engine family, evaporative/refueling emission family, refueling emission control system, refueling emissions canister continuous drive purge miles and number of UDDSs driven for non-integrated systems, fuel system (including fuel tank(s) capacity and location), basic engine description (including displacement, number of cylinders, turbocharger (if used), and catalyst usage), engine code, and odometer reading.

(g) All pertinent instrument information including nozzle and fuel delivery system description. As an alternative,

a reference to a vehicle test cell number may be used, with advance approval of the Administrator, provided test cell calibration records show the pertinent instrument information.

(h) Recorder charts: Identify zero, span, and enclosure gas sample traces.

(i) Enclosure barometric pressure and ambient temperature: a central laboratory barometer may be used, *provided* that individual test cell barometric pressures are shown to be within ±0.1 percent of the barometric pressure at the central barometer location.

(j) Temperatures: Soak area; dispensed fuel, initial and final.

(k) Fuel dispensing rate(s).

(l) Dispensed fuel volume.

(m) For methanol-fueled vehicles:

(1) Volume of sample passed through the methanol sampling system and the volume of deionized water in each impinger.

(2) The methanol concentration in the reference sample and the peak area from the GC analysis of the reference sample.

(3) The peak area of the GC analyses of the test samples (methanol).

(n) All additional information necessary for the calculations specified in §86.156–98.

[59 FR 16300, Apr. 6, 1994]

§86.156–98 Calculations; refueling test.

(a) The calculation of the net hydrocarbon mass change and methanol mass change (if applicable) in the enclosure is used to determine refueling mass emissions. The mass is calculated from initial and final hydrocarbon and methanol (if applicable) concentrations in ppm carbon, initial and final enclosure ambient temperatures, initial and final barometric pressures, and net enclosure volume using the equations of §86.143–96. For vehicles with multiple tanks, the results for each tank shall be calculated and then summed to determine overall refueling emissions.

(b) The final results for comparison with the refueling control emission standard shall be computed by dividing the total refueling mass emissions by the total gallons of fuel dispensed in the refueling test (see §86.154–98(e)(7)(ii)).

(c) The results of all emission tests shall be rounded, in accordance with ASTM E 29–67 (reapproved 1980) (as referenced in §86.094–28(a)(4)(i)(B)(*2*)(*ii*)) to the number of decimal places contained in the applicable emission standard expressed to one additional significant figure.

[59 FR 16300, Apr. 6, 1994]

§86.157–98 Refueling test procedures for liquefied petroleum gas-fueled vehicles.

(a) *Equipment.* (1) The sampling and analytical system shall meet the specifications in §86.107–98(a) through (i).

(2) The refueling equipment nozzle specifications shall meet the requirements described in §80.32.

(b) *General requirements.* (1) The refueling test procedure for light-duty liquefied petroleum gas-fueled vehicles and trucks starts with the preconditioning of the vehicle followed by a refueling emissions measurement. The test is conducted by following paragraphs (c) through (f) of this section in order.

(2) Ambient temperature levels encountered by the test vehicle throughout the test sequence shall not be less than 68 °F (20 °C) nor more than 86 °F (30 °C).

(3) The vehicle shall be approximately level during all phases of the test sequence to prevent abnormal fuel distribution.

(c) *Vehicle preconditioning.* (1) The vehicle fuel tanks are to be filled with fuel that meets the specifications in §86.113. Fuel tanks shall be filled to 10 percent of nominal fuel tank capacity, determined to the nearest one-tenth of a U.S. gallon (0.38 liter).

(2) The vehicle shall be parked (without starting the engine) within the temperature range specified in paragraph (a)(2) of this section for a minimum of one hour and a maximum of six hours.

(d) *Measurement procedure.* (1) The steps prior to the actual refueling event described in §86.154–98(b) through (e)(5) shall be performed.

(2) Within one minute of obtaining the initial FID (or HFID) reading, the dispensed fuel nozzle shall be attached to the vehicle fuel receptacle, and the refueling operation shall be started. If the vehicle is equipped with a fixed liquid level gauge or other gauge or valve

which could be opened to release fuel or fuel vapor during refueling, and has not received an exemption as outlined in §§ 86.098–28(h), 86.001–28(h) or 86.004–28(h), the fixed level gauge or other gauges or valves shall be opened after the dispensing nozzle is attached, but prior to the start of the refueling operation. The dispensed fuel must be at a temperature stabilized to approximately the same temperature as the vehicle was in paragraph (c)(2) of this section. The dispensing rate must be typical of in-use dispensing rates for liquefied petroleum gas into light-duty vehicles and trucks.

(3) The fuel flow shall continue until the amount of fuel dispensed is at least 85 percent of nominal fuel tank capacity, determined to the nearest one-tenth of a U.S. gallon (0.38 liter).

(4) Following the fuel shut-off the fixed liquid level gauge or other gauges or valves, if open, shall be closed and the nozzle disconnected.

(5) The final reading of the evaporative enclosure FID (or HFID) analyzer shall be taken 60 ±5 seconds following the disconnect of the refueling nozzle. This is the final hydrocarbon concentration, C_{HCf}, required in § 86.143. The elapsed time, in minutes, between the initial and final FID (or HFID) readings shall be recorded.

(6) For vehicles equipped with more than one fuel tank, the procedures described in this section shall be performed for each fuel tank.

(e) *Records required.* (1) Test: test number, system or device tested (brief description), date and time of day, instrument operated, operator, enclosure barometric pressure and temperature, recorder charts (identify zero, span, and enclosure gas traces), fuel dispensing rate(s) and dispensed fuel volume.

(2) Vehicle: ID number, manufacturer, model year, engine family, evaporative/refueling emission family, fuel tank(s) capacity, basic fuel system description and odometer reading.

(3) All pertinent instrument information including nozzle and fuel delivery system description. As an alternative, a reference to a vehicle test cell number may be used, with advance approval of the Administrator, provided test cell calibration records show the pertinent instrument information.

(4) All additional information necessary for the calculations specified in paragraph (f) of this section.

(f) *Calculations.* (1) The calculation of the net hydrocarbon mass change in the enclosure is used to determine refueling mass emissions. The mass is calculated from initial and final hydrocarbon concentrations in ppm carbon, initial and final enclosure ambient temperatures, initial and final barometric pressures and net volume using the equations of § 86.143. For vehicles with multiple tanks, the results for each tank shall be calculated and then summed to determine overall refueling emissions.

(2) The final results for comparison with the refueling control emission standard shall be computed by dividing the total refueling mass emissions by the total gallons of fuel dispensed in the refueling test (see paragraph (d)(3) of this section).

(3) The results of all emission tests shall be rounded, in accordance with ASTM E 29–67 to the number of decimal places contained in the applicable emission standard expressed to one additional significant figure. This procedure has been incorporated by reference (see § 86.1).

[59 FR 48511, Sept. 21, 1994]

§ 86.158–00 Supplemental Federal Test Procedures; overview.

The procedures described in §§ 86.158–00, 86.159–00, 86.160–00, and 86.166–00 discuss the aggressive driving (US06) and air conditioning (SC03) elements of the Supplemental Federal Test Procedures (SFTP). These test procedures consist of two separable test elements: A sequence of vehicle operation that tests exhaust emissions with a driving schedule (US06) that tests exhaust emissions under high speeds and accelerations (aggressive driving); and a sequence of vehicle operation that tests exhaust emissions with a driving schedule (SC03) which includes the impacts of actual air conditioning operation. These test procedures (and the associated standards set forth in subpart A of this part) are applicable to light-duty vehicles and light-duty trucks.

(a) Vehicles are tested for the exhaust emissions of THC, CO, NO_X, CH_4,

and CO_2. For diesel-cycle vehicles, THC is sampled and analyzed continuously according to the provisions of §86.110.

(b) Each test procedure follows the vehicle preconditioning specified in §86.132–00.

(c) *US06 Test Cycle.* The test procedure for emissions on the US06 driving schedule (see §86.159–00) is designed to determine gaseous exhaust emissions from light-duty vehicles and light-duty trucks while simulating high speed and acceleration on a chassis dynamometer (aggressive driving). The full test consists of preconditioning the engine to a hot stabilized condition, as specified in §86.132–00, and an engine idle period of 1 to 2 minutes, after which the vehicle is accelerated into the US06 cycle. A proportional part of the diluted exhaust is collected continuously for subsequent analysis, using a constant volume (variable dilution) sampler or critical flow venturi sampler.

(d) *SC03 Test Cycle.* The test procedure for determining exhaust emissions with the air conditioner operating (see §86.160–00) is designed to determine gaseous exhaust emissions from light-duty vehicles and light-duty trucks while simulating an urban trip during ambient conditions of 95 °F, 100 grains of water/pound of dry air (approximately 40 percent relative humidity), and a solar heat load intensity of 850 W/m^2. The full test consists of vehicle preconditioning (see §86.132–00 paragraphs (o) (1) and (2)), an engine key-off 10 minute soak, an engine start, and operation over the SC03 cycle. A proportional part of the diluted exhaust is collected continuously during the engine start and the SC03 driving cycle for subsequent analysis, using a constant volume (variable dilution) sampler or critical flow venturi sampler.

(e) The emission results from the aggressive driving test (§86.159–00), air conditioning test (§86.160–00), and a FTP test (§86.130–00 (a) through (d) and (f)) (conducted on a large single roll or equivalent dynamometer) are analyzed according to the calculation methodology in §86.164–00 and compared to the applicable SFTP emission standards in subpart A of this part (§§86.108–00 and 86.109–00).

(f) These test procedures may be run in any sequence that maintains the applicable preconditioning elements specified in §86.132–00.

[61 FR 54894, Oct. 22, 1996]

§86.159–00 Exhaust emission test procedures for US06 emissions.

(a) *Overview.* The dynamometer operation consists of a single, 600 second test on the US06 driving schedule, as described in appendix I, paragraph (g), of this part. The vehicle is preconditioned in accordance with §86.132–00, to bring it to a warmed-up stabilized condition. This preconditioning is followed by a 1 to 2 minute idle period that proceeds directly into the US06 driving schedule during which continuous proportional samples of gaseous emissions are collected for analysis. If engine stalling should occur during cycle operation, follow the provisions of §86.136–90 (engine starting and restarting). For gasoline-fueled Otto-cycle vehicles, the composite samples collected in bags are analyzed for THC, CO, CO_2, CH_4, and NO_X. For petroleum-fueled diesel-cycle vehicles, THC is sampled and analyzed continuously according to the provisions of §86.110. Parallel bag samples of dilution air are analyzed for THC, CO, CO_2, CH_4, and NO_X.

(b) *Dynamometer activities.* (1) All official US06 tests shall be run on a large single roll electric dynamometer, or an approved equivalent dynamometer configuration, that satisfies the requirements of §86.108–00.

(2) Position (vehicle can be driven) the test vehicle on the dynamometer and restrain.

(3) Required US06 schedule test dynamometer inertia weight class selections are determined by the test vehicles test weight basis and corresponding equivalent weight as listed in the tabular information of §86.129–94(a) and discussed in §86.129–00 (e) and (f).

(4) Set the dynamometer test inertia weight and roadload horsepower requirements for the test vehicle (see §86.129–00 (e) and (f). The dynamometer's horsepower adjustment settings shall be set to match the force imposed during dynamometer operation with actual road load force at all speeds.

(5) The vehicle speed as measured from the dynamometer rolls shall be

used. A speed vs. time recording, as evidence of dynamometer test validity, shall be supplied on request of the Administrator.

(6) The drive wheel tires may be inflated up to a gauge pressure of 45 psi (310 kPa), or the manufacturer's recommended pressure if higher than 45 psi, in order to prevent tire damage. The drive wheel tire pressure shall be reported with the test results.

(7) The driving distance, as measured by counting the number of dynamometer roll or shaft revolutions, shall be determined for the test.

(8) Four-wheel drive vehicles will be tested in a two-wheel drive mode of operation. Full-time four-wheel drive vehicles will have one set of drive wheels temporarily disengaged by the vehicle manufacturer. Four-wheel drive vehicles which can be manually shifted to a two-wheel mode will be tested in the normal on-highway two-wheel drive mode of operation.

(9) During dynamometer operation, a fixed speed cooling fan with a maximum discharge velocity of 15,000 cfm will be positioned so as to direct cooling air to the vehicle in an appropriate manner with the engine compartment cover open. In the case of vehicles with front engine compartments, the fan shall be positioned within 24 inches (61 centimeters) of the vehicle. In the case of vehicles with rear engine compartments (or if special designs make the above impractical), the cooling fan(s) shall be placed in a position to provide sufficient air to maintain vehicle cooling. The Administrator may approve modified cooling configurations or additional cooling if necessary to satisfactorily perform the test. In approving requests for additional or modified cooling, the Administrator will consider such items as actual road cooling data and whether such additional cooling is needed to provide a representative test.

(c) The flow capacity of the CVS shall be large enough to virtually eliminate water condensation in the system.

(d) Practice runs over the prescribed driving schedule may be performed at test point, provided an emission sample is not taken, for the purpose of finding the appropriate throttle action to maintain the proper speed-time relationship, or to permit sampling system adjustment.

(e) Perform the test bench sampling sequence outlined in § 86.140–94 prior to or in conjunction with each series of exhaust emission measurements.

(f) *Test activities.* (1) The US06 consists of a single test which is directly preceded by a vehicle preconditioning in accordance with § 86.132–00. Following the vehicle preconditioning, the vehicle is idled for not less than one minute and not more than two minutes. The equivalent dynamometer mileage of the test is 8.0 miles (1.29 km).

(2) The following steps shall be taken for each test:

(i) Immediately after completion of the preconditioning, idle the vehicle. The idle period is not to be less than one minute or not greater than two minutes.

(ii) With the sample selector valves in the ''standby'' position, connect evacuated sample collection bags to the dilute exhaust and dilution air sample collection systems.

(iii) Start the CVS (if not already on), the sample pumps, the temperature recorder, the vehicle cooling fan, and the heated THC analysis recorder (diesel-cycle only). The heat exchanger of the constant volume sampler, if used, petroleum-fueled diesel-cycle THC analyzer continuous sample line should be preheated to their respective operating temperatures before the test begins.

(iv) Adjust the sample flow rates to the desired flow rate and set the gas flow measuring devices to zero.

(A) For gaseous bag samples (except THC samples), the minimum flow rate is 0.17 cfm (0.08 liters/sec).

(B) For THC samples, the minimum FID (or HFID in the case of diesel-cycle vehicles) flow rate is 0.066 cfm (0.031 liters/sec).

(C) CFV sample flow rate is fixed by the venturi design.

(v) Attach the exhaust tube to the vehicle tailpipe(s).

(vi) Start the gas flow measuring device, position the sample selector valves to direct the sample flow into the exhaust sample bag, the dilution air sample bag, turn on the petroleum-

fueled diesel-cycle THC analyzer system integrator, mark the recorder chart, and record both gas meter or flow measurement instrument readings, (if applicable).

(vii) Place vehicle in gear after starting the gas flow measuring device, but prior to the first acceleration. Begin the first acceleration 5 seconds after starting the measuring device.

(viii) Operate the vehicle according to the US06 driving schedule, as described in appendix I, paragraph (g), of this part. Manual transmission vehicles shall be shifted according to the manufacturer recommended shift schedule, subject to review and approval by the Administrator. For further guidance on transmissions see §86.128–00.

(ix) Turn the engine off 2 seconds after the end of the last deceleration.

(x) Five seconds after the engine stops running, simultaneously turn off gas flow measuring device No. 1 (and the petroleum-fueled diesel hydrocarbon integrator No. 1 and mark the petroleum-fueled diesel hydrocarbon recorder chart if applicable) and position the sample selector valves to the ''standby'' position. Record the measured roll or shaft revolutions and the No. 1 gas meter reading or flow measurement instrument.

(xi) As soon as possible, transfer the exhaust and dilution air bag samples to the analytical system and process the samples according to §86.140–94 obtaining a stabilized reading of the bag exhaust sample on all analyzers within 20 minutes of the end of the sample collection phase of the test.

(xii) Immediately after the end of the sample period, turn off the cooling fan, close the engine compartment cover, disconnect the exhaust tube from the vehicle tailpipe(s), and drive the vehicle from dynamometer.

(xiii) The CVS or CFV may be turned off, if desired.

[61 FR 54894, Oct. 22, 1996]

EFFECTIVE DATE NOTE: At 61 FR 54894, Oct. 22, 1996, §86.159–00 was added. This section contains information collection and recordkeeping requirements and will not become effective until approval has been given by the Office of Management and Budget.

§86.160–00 Exhaust emission test procedure for SC03 emissions.

(a) *Overview.* The dynamometer operation consists of a single, 594 second test on the SCO3 driving schedule, as described in appendix I, paragraph (h), of this part. The vehicle is preconditioned, in accordance with §86.132–00 of this subpart, to bring the vehicle to a warmed-up stabilized condition. This preconditioning is followed by a 10 minute vehicle soak (engine off) that proceeds directly into the SC03 driving schedule, during which continuous proportional samples of gaseous emissions are collected for analysis. The entire test, including the preconditioning driving, vehicle soak, and SC03 official test cycle, is either conducted in an environmental test facility or under test conditions that simulates testing in an environmental test cell (see §86.162–00 (a) for a discussion of simulation procedure approvals). The environmental test facility must be capable of providing the following nominal ambient test conditions of: 95 °F air temperature, 100 grains of water/pound of dry air (approximately 40 percent relative humidity), a solar heat load intensity of 850 W/m^2, and vehicle cooling air flow proportional to vehicle speed. Section 86.161–00 discusses the minimum facility requirements and corresponding control tolerances for air conditioning ambient test conditions. The vehicle's air conditioner is operated or appropriately simulated for the duration of the test procedure (except for the vehicle 10 minute soak), including the preconditioning. For gasoline-fueled Otto-cycle vehicles, the composite samples collected in bags are analyzed for THC, CO, CO_2, CH_4, and NO_X. For petroleum-fueled diesel-cycle vehicles, THC is sampled and analyzed continuously according to the provisions of §86.110. Parallel bag samples of dilution air are analyzed for THC, CO, CO_2, CH_4, and NO_X.

(b) *Dynamometer activities.* (1) All official air conditioning tests shall be run on a large single roll electric dynamometer or an equivalent dynamometer configuration that satisfies the requirements of §86.108–00.

(2) Position (vehicle can be driven) the test vehicle on the dynamometer and restrain.

(3) Required SC03 schedule test dynamometer inertia weight class selections are determined by the test vehicles test weight basis and corresponding equivalent weight as listed in the tabular information of § 86.129–00(a) and discussed in § 86.129–00 (e) and (f).

(4) Set the dynamometer test inertia weight and roadload horsepower requirements for the test vehicle (see § 86.129–00 (e) and (f)). The dynamometer's horsepower adjustment settings shall be set such that the force imposed during dynamometer operation matches actual road load force at all speeds.

(5) The vehicle speed as measured from the dynamometer rolls shall be used. A speed vs. time recording, as evidence of dynamometer test validity, shall be supplied at request of the Administrator.

(6) The drive wheel tires may be inflated up to a gauge pressure of 45 psi (310 kPa), or the manufacturer's recommended pressure if higher than 45 psi, in order to prevent tire damage. The drive wheel tire pressure shall be reported with the test results.

(7) The driving distance, as measured by counting the number of dynamometer roll or shaft revolutions, shall be determined for the test.

(8) Four-wheel drive vehicles will be tested in a two-wheel drive mode of operation. Full-time four-wheel drive vehicles will have one set of drive wheels temporarily disengaged by the vehicle manufacturer. Four-wheel drive vehicles which can be manually shifted to a two-wheel mode will be tested in the normal on-highway two-wheel drive mode of operation.

(c) *Vehicle and test activities for testing in a full environmental cell.* The SFTP air conditioning test in an environmental test cell is composed of the following sequence of activities. Alternative procedures which appropriately simulate full environmental cell testing may be approved under the provisions of §§ 86.162–00(a) and 86.163–00.

(1) Drain and fill the vehicle's fuel tank to 40 percent capacity with test fuel. If a vehicle has gone through the drain and fuel sequence less than 72 hours previously and has remained under laboratory ambient temperature conditions, this drain and fill operation can be omitted (see § 86.132–00(c)(2)(ii)).

(2)(i) Position the variable speed cooling fan in front of the test vehicle with the vehicle's hood down. This air flow should provide representative cooling at the front of the test vehicle (air conditioning condenser and engine) during the SC03 driving schedule. See § 86.161–00(e) for a discussion of cooling fan specifications.

(ii) In the case of vehicles with rear engine compartments (or if this front location provides inadequate engine cooling), an additional cooling fan shall be placed in a position to provide sufficient air to maintain vehicle cooling. The fan capacity shall normally not exceed 5300 cfm (2.50 m^3/s). If, however, it can be demonstrated that during road operation the vehicle receives additional cooling, and that such additional cooling is needed to provide a representative test, the fan capacity may be increased or additional fans used if approved in advance by the Administrator.

(3) Close all vehicle windows.

(4) Connect the emission test sampling system to the vehicle's exhaust tail pipe(s).

(5)(i) Set the environmental test cell ambient test conditions to the conditions defined in § 86.161–00.

(ii) Turn on the solar heating system.

(iii) All vehicle test phases of preconditioning, soak, and the official SC03 test cycle are to be performed in this set of ambient test conditions.

(6) Set the air conditioning system controls as follows:

(i) A/C mode setting at Maximum.

(ii) Airflow setting at Recirculate, if so equipped.

(iii) Fan setting at Highest setting.

(iv) A/C Temperature setting at full cool (for automatic systems set at 72 °F).

(v) Air conditioning controls should be placed in the ''on'' position prior to vehicle starting so that the air conditioning system is active whenever the engine is running.

(7) Start the vehicle (with air conditioning system on) and conduct a preconditioning cycle as discussed in § 86.132–00(o)(1).

(i) If engine stalling should occur during any air conditioning test cycle

operation, follow the provisions of § 86.136–90 (Engine starting and restarting).

(ii) For manual transmission vehicles, the vehicle shall be shifted according the provisions of § 86.128–00.

(8) Following the preconditioning cycle, the test vehicle (and consequently the air conditioning system) and cooling fan(s) are turned off and the vehicle is allowed to soak in the ambient conditions of paragraph (c)(5) of this section for 10 # 1 minutes.

(9) Start engine (with air conditioning system also running). Fifteen seconds after the engine starts, place vehicle in gear.

(10) Twenty seconds after the engine starts, begin the initial vehicle acceleration of the driving schedule.

(11) Operate the vehicle according to the SC03 driving schedule, as described in appendix I, paragraph (h), of this part.

(12) Turn the engine off 2 seconds after the end of the last deceleration.

(d) *Exhaust Emission Measurement Activities.* The following activities are performed, when applicable, in order to meet the timing of the vehicle test and environmental facility activities.

(1) Perform the test bench sampling calibration sequence outlined in § 86.140–94 prior to or in conjunction with each series of exhaust emission measurements.

(2) With the sample selector valves in the ''standby'' position, connect evacuated sample collection bags to the dilute exhaust and dilution air sample collection systems.

(3) Start the CVS (if not already on), the sample pumps, the temperature recorder, the vehicle cooling fan, and the heated THC analysis recorder (diesel-cycle only). The heat exchanger of the constant volume sampler, if used, petroleum-fueled diesel-cycle THC analyzer continuous sample line should be preheated to their respective operating temperatures before the test begins.

(4) Adjust the sample flow rates to the desired flow rate and set the gas flow measuring devices to zero.

(i) For gaseous bag samples (except THC samples), the minimum flow rate is 0.17 cfm (0.08 liters/sec).

(ii) For THC samples, the minimum FID (or HFID in the case of diesel-cycle vehicles) flow rate is 0.066 cfm (0.031 1/sec).

(iii) CFV sample flow rate is fixed by the venturi design.

(5) Attach the exhaust tube to the vehicle tailpipe(s).

(6) Start the gas flow measuring device, position the sample selector valves to direct the sample flow into the exhaust sample bag, the dilution air sample bag, turn on the petroleum-fueled diesel-cycle THC analyzer system integrator, mark the recorder chart, and record both gas meter or flow measurement instrument readings, if applicable.

(7) Start the engine (with air conditioning system also running). Fifteen seconds after the engine starts, place vehicle in gear.

(8) Twenty seconds after the engine starts, begin the initial vehicle acceleration of the driving schedule.

(9) Operate the vehicle according to the SC03 driving schedule.

(10) Turn the engine off 2 seconds after the end of the last deceleration.

(11) Five seconds after the engine stops running, simultaneously turn off gas flow measuring device No. 1 (and the petroleum-fueled diesel hydrocarbon integrator No. 1 and mark the petroleum-fueled diesel hydrocarbon recorder chart if applicable) and position the sample selector valves to the ''standby'' position. Record the measured roll or shaft revolutions and the No. 1 gas meter reading or flow measurement instrument).

(12) As soon as possible, transfer the exhaust and dilution air bag samples to the analytical system and process the samples according to § 86.140 obtaining a stabilized reading of the bag exhaust sample on all analyzers within 20 minutes of the end of the sample collection phase of the test.

(13) Immediately after the end of the sample period, turn off the cooling fan, close the engine compartment cover, disconnect the exhaust tube from the vehicle tailpipe(s), and drive the vehicle from dynamometer.

(14) The CVS or CFV may be turned off, if desired.

(e) *NO_X humidity correction.* Calculated NO_X exhaust emissions from air conditioning tests conducted in an environmental test cell at a nominal

100 grains of water/pound of dry air are to be corrected for humidity to 100 grains of water/pound of dry air (see the relationship of § 86.164–00(d)).

[61 FR 54895, Oct. 22, 1996]

EFFECTIVE DATE NOTE: At 61 FR 54895, Oct. 22, 1996, § 86.160–00 was added. This section contains information collection and recordkeeping requirements and will not become effective until approval has been given by the Office of Management and Budget.

§ 86.161–00 Air conditioning environmental test facility ambient requirements.

The goal of an air conditioning test facility is to simulate the impact of an ambient heat load on the power requirements of the vehicle's air conditioning compressor while operating on a specific driving cycle. The environmental facility control elements that are discussed are ambient air temperature and humidity, minimum test cell size, solar heating, and vehicle frontal air flow.

(a) *Ambient air temperature.* (1) Ambient air temperature is controlled, within the test cell, during all phases of the air conditioning test sequence to 95 ± 2 °F on average and 95 ± 5eg;F as an instantaneous measurement.

(2) Air temperature is recorded continuously at a minimum of 30 second intervals. Records of cell air temperatures and values of average test temperatures are maintained by the manufacturer for all certification related programs.

(b) *Ambient humidity.* (1) Ambient humidity is controlled, within the test cell, during all phases of the air conditioning test sequence to an average of 100 ± grains of water/pound of dry air.

(2) Humidity is recorded continuously at a minimum of 30 second intervals. Records of cell humidity and values of average test humidity are maintained by the manufacturer for all certification related programs.

(c) *Minimum test cell size.* (1) The recommended minimum environmental exhaust emission test cell size is width 20 feet, length 40 feet, and height 10 feet.

(2) Test cells with smaller size dimensions may be approved by the Administrator if it can be shown that all of the ambient test condition performance requirements are satisfied.

(d) *Solar heat loading.* (1)(i) Acceptable types of radiant energy emitters that may be used for simulating solar heat load are:

(A) Metal halide;

(B) Quartz halogen with dichroic mirrors; and

(C) Sodium iodide.

(ii) The Administrator will approve other types of radiant energy emitters if the manufacturer can show they satisfy the requirements of this section.

(2) The height of the minimal cell size will dictate the type of radiant energy source that will satisfy the spectral distribution and uniformity definitions of this section.

(3) Radiant energy specifications. (i) Simulated solar radiant energy intensity is determined as an average of the two points measured at:

(A) Centerline of the test vehicle at the base of the windshield.

(B) Centerline of the vehicle at the base of the rear window (truck and van location defined as bottom of vertical window or where an optional window would be located).

(ii) The radiant energy intensity set point is 850 ±45 watts/square meter.

(iii) The definition of an acceptable spectral distribution is contained in the following table:

DEFINITION OF THE SPECTRAL DISTRIBUTION

Band width (nanometers)	Percent of total spectrum	
	Lower limit (percent)	Upper limit (percent)
<320	0	0
320–400	0	7
400–780	45	55
>780	35	53

Note: Filter the UV region between 280 and 320 wave lengths.

(iv) The angle of incidence of radiant energy is defined as 90 degrees from the test cell floor.

(v) The requirements for measuring the uniformity of radiant energy are:

(A) The radiant energy uniformity tolerance is ±15 percent of the radiant energy intensity set point of 850 watts/square meter.

(B) The uniformity of radiant energy intensity is measured at each point of

a 0.5 meter grid over the entire footprint of the test vehicle at the elevation of one meter including the footprint edges.

(C) Radiant energy uniformity must be checked at least every 500 hours of emitter usage or every six months depending on which covers the shorter time period; and every time major changes in the solar simulation hardware occur.

(vi) The radiant energy intensity measurement instrument specifications (minimum) are:

(A) Sensitivity of 9 microvolts per watt/square meter;

(B) Response time of 1 second;

(C) Linearity of ±0.5 percent; and

(D) Cosine of ±1 percent from normalization 0–70 degree zenith angle.

(e) *Vehicle frontal air flow.* The Administrator will approve frontal air flow based on ''blower in box'' technology as an acceptable simulation of environmental air flow cooling for the air conditioning compressor and engine, provided the following requirements are satisfied.

(1) The minimum air flow nozzle discharge area must be equal or exceed the vehicle frontal inlet area. Optimum discharge area is 18 square feet (4.25 x 4.25), however, other sizes can be used.

(2) Air flow volumes must be proportional to vehicle speed. With the above optimum discharge size, the fan volume would vary from 0 cubic feet/minute (cfm) at 0 mph to approximately 95,000 cfm at 60 mph. If this fan is also the only source of cell air circulation or if fan operational mechanics make the 0 mph air flow requirement impractical, air flow of 2 mph or less will be allowed at 0 mph vehicle speed.

(3) The fan air flow velocity vector perpendicular to the axial flow velocity vector shall be less than 10 percent of the mean velocity measured at fan speeds corresponding to vehicle speeds of 20 and 40 mph.

(4)(i) Fan axial air flow velocity is measured two feet from nozzle outlet at each point of a one foot grid over the entire discharge area.

(ii) The uniformity of axial flow tolerance is 20 percent of the fan speeds corresponding to vehicle speeds of 20 and 40 mph.

(5) The instrument used to verify the air velocity must have an accuracy of 2 percent of the measured air flow speed.

(6) The fan discharge nozzle must be located 2 to 3 feet from the vehicle and 0 to 6 inches above the test cell floor during air conditioning testing. This applies to non-wind tunnel environmental test cells only.

(7) The design specifications discussed in paragraphs (e)(1) through (e)(5) of this section must be verified by the manufacturer prior to conducting certification air conditioning tests.

[61 FR 54897, Oct. 22, 1996]

EFFECTIVE DATE NOTE: At 61 FR 54897, Oct. 22, 1996, §86.161–00 was added. This section contains information collection and recordkeeping requirements and will not become effective until approval has been given by the Office of Management and Budget.

§86.162–00 Approval of alternative air conditioning test simulations and descriptions of AC1 and AC2.

The alternative air conditioning test procedures AC1 and AC2 are approved by the Administrator for all light-duty vehicles and light-duty trucks only for the model years of 2000, 2001, and 2002. To obtain Administrator approval of other simulation test procedures a manufacturer must satisfy the requirements of paragraph (a) of this section and meet the requirements of §86.163–00. Air conditioning tests AC1 and AC2 are simulations of the environmental test cell air conditioning test discussed in §86.160–00. AC1 simulates, in standard test cell ambient conditions and with the air conditioning off, the exhaust emission results of air conditioning operation in an environmental test cell by adding additional power requirements to roadload dynamometer requirements. AC2 simulates, in standard test cell ambient conditions and with the air conditioning controls in the heat position, the exhaust emission results of air conditioning operation in an environmental test cell by adding a heat load to the passenger compartment. The only differences between the test activities described in §86.160–00 and those for AC1 and AC2 occur as the result of how the effect of the environmental cell ambient test conditions, defined in §86.160–00(c)(5)(i), are simulated in a standard test cell nominal

ambient conditions of 76 °F and 50 grains of water/pound of dry air. Paragraph (a) of this section discusses the procedure by which a manufacturer can obtain Administrator approval of other air conditioning test simulation procedures. Paragraph (b) of this section describes the AC1 test procedure and paragraph (c) of this section describes the AC2 test procedure.

(a) Upon petition from a manufacturer or upon the Agency's own initiative, the Administrator will approve a simulation of the environmental cell for air conditioning test (SC03) described in § 86.160–00 providing that the procedure can be run by the Administrator for SEA and in-use enforcement testing and providing that the criteria of paragraphs (a)(1)(2), and (3) of this section are satisfied.

(1) In deciding whether approvals will be granted, the Administrator may consider data showing how well the simulation matches environmental cell test data for the range of vehicles to be covered by the simulation including items such as the tailpipe emissions, air conditioning compressor load, and fuel economy.

(2) The Administrator has approved test procedures AC1 and AC2 for only the model years of 2000, 2001, and 2002.

(3) Excluding the AC1 and AC2 procedures described in paragraphs (b) and (c) of this section for model years 2000, 2001, and 2002, for any simulation approved under paragraph (a) of this section, the manufacturer must agree to be subject to an ongoing yearly correlation spot check as described in § 86.163–00.

(4) Once a simulation is approved and used by a manufacturer for testing for a given vehicle, EPA agrees to use the simulation test procedure for all official testing conducted on that vehicle by the Agency for certification, SEA, and recall purposes, excluding spot check testing and vehicles which fail the spot check criteria as described in § 86.163–00.

(5) EPA will moniter the aggregate results of spot check testing and full environmental test cells. If EPA determines, based on such aggregate results, that any simulation (other than the AC1 and AC2 procedures described in paragraphs (b) and (c) of this section for the 2000, 2001, and 2002 model years) is producing test results consistantly below those from a full environmental test cell, EPA may review its approval of the simulation.

(b) *AC1 test procedure.* (1) Section 86.160–00(a) is applicable to the AC1 test procedure except for the discussion of the environmental test requirements. The AC1 test procedure simulates the effect of air conditioning operation in the environmental cell test conditions by adding the measured horsepower of the air conditioning system compressor, converted to an equivalent roadload component, to the normal dynamometer roadload horsepower.

(2) Section 86.160–00(b) is applicable to the AC1 test procedure except that the dynamometer horsepower settings procedure of § 86.160–00(b)(4) is expanded to include a horsepower increase adjustment.

(i) The following describes one acceptable method of obtaining the required compressor horsepower and the corresponding roadload equivalent horsepower adjustment. Air compressor horsepower is measured during a SC03 air conditioning test cycle while operating in an environmental test cell as described in § 86.160–00.

(A) Install an air conditioning (A/C) compressor with a strain-gauged input shaft that measures shaft torque in foot pounds. Other measurement techniques that produce data that can be shown will estimate A/C compressor horsepower are also acceptable.

(B) Obtain the engine crankshaft to A/C compressor pulley diameter (D) ratio (ACPR) as:

ACPR=D(crankshaft pulley)/D(A/C pulley)

(C) Record the following parameters, as a function of accumulated time (t), at least once per second from second 0 to second 600 while driving the SC03 cycle with the air conditioning system operating.

(*1*) Engine revolutions/minute ($ERPM_t$).

(*2*) Compressor input torque in foot pounds (CT_t).

(D) For each second of data recorded from paragraph (b)(2)(i)(C) of this section, calculate compressor horsepower (CHP_t) as:

$CHP_t=(CT_t)(ERPM_t)(ACPR)/5252$

(E) For each second of accumulated time and the data of paragraph (b)(2)(i)(B) and (D) of this section, determine a value of air conditioning compressor roadload force ($ACRF_t$) that is equivalent to the air conditioning compressor force on the engine as:

$ACRF_t=(CHP_t)(375)/V_t$.

where:

V_t equals vehicle SC03 cycle speed in miles per hour for each accumulated second of time, and 375 is a units constant to convert ($ACRF_t$) to foot pounds of force.

(F) Values of ($ACRF_t$) at each second of time are added to the corresponding roadload dynamometer force requirements of § 86.129–00(e) to obtain an approximation of the force generated by the vehicle engine during a SC03 test in an environmental test cell.

(ii) The method by which the values of ($ACRF_t$) additional dynamometer load is applied by the dynamometer to the vehicle tire surface will vary with dynamometer design and its force simulation capabilities. If the dynamometer has grade simulation capabilities, increasing load by simulating varying grades is one acceptable method of applying ($ACRF_t$) values.

(iii) For those calculated values of ($ACRF_t$) which exceed the force capacity of the dynamometer being used for simulation test, replace the calculated values with the maximum road force capacity of the dynamometer. The Administrator would normally not expect ($ACRF_t$) values to exceed dynamometer capability for time periods of more than a second.

(iv) Values of ($ACRF_t$) for application to AC1 testing should be an average of at least two runs unless the manufacturer can demonstrate to the Administrator that one run repeatability is acceptable.

(v) Values of ($ACRF_t$) for application to AC1 testing are to be obtained for each vehicle and engine family combination. If only one vehicle configuration is selected to represent an engine family, the selected configuration is the vehicle expected to produce the highest air conditioning load requirements. A manufacturer may petition the Administrator to reduce the number of ($ACRF_t$) test vehicles for their product line, if they can show that the highest air conditioning loads are covered with a lesser number than one per family.

(vi) Test results, calculations, and dynamometer setting values associated with making these roadload determinations are to be retained by the manufacturer as part of their certification records.

(3) Perform the SC03 air conditioning test sequence as described in § 86.160–00(c) with the following exceptions:

(i) The variable speed cooling fan of § 86.160–00(c)(2)(ii) is replaced with the fixed speed cooling fan requirements of § 86.159–00(b).

(ii) The position of vehicle windows is optional.

(iii) The nominal ambient air test conditions of § 86.160–00(b)(5)(i) (A) and (B) are replaced with 76 °F and 50 grains of water/pound of dry air and the solar heat load of § 86.160–00(b)(5)(i)(C) is omitted.

(iv) The air conditioning system is not operated during the SC03 test cycle. Operation of the air conditioning during preconditioning test cycles is optional.

(4) Section 86.160–00(d) is applicable to the AC1 test procedure.

(5) *NO_X humidity correction*. Calculated NO_X exhaust emissions from air conditioning tests conducted in a standard test cell at a nominal 50 grains of water/pound of dry air are corrected for humidity to 75 grains of water/pound of dry air (see the relationship of § 86.144–94(c)(7)(iv)(B)).

(c) *AC2 test procedure*. (1) section 86.160–00(a) is applicable the AC2 test procedure except for the discussion of the environmental test requirements. The AC2 test procedure simulates the effect of air conditioning operation in the environmental cell test conditions by adding heat from the vehicle's heating system to the interior of the passenger compartment.

(2) Section 86.160–00(b) is applicable to the AC2 test procedure.

(3) Section 86.160–00(c) is applicable except for the following:

(i) Section 86.160–00(c)(3) is applicable except the drivers side front window is left open and all the others are closed.

(ii) The nominal ambient air test conditions of § 86.160–00(b)(5)(i) (A) and (B) are replaced with 76 °F and 50 grains of water/pound of dry air and

the solar heat load of § 86.160–00(b)(5)(i)(C) is omitted.

(iii) The control position instruction of § 86.160–00(c)(6)(iv) is replaced with set the A/C temperature control to the highest warm position (maximum for automatic systems).

(4) Section 86.160–00(d) is applicable to the AC2 test procedure.

(5) *NO_x humidity correction*. Calculated NO_X exhaust emissions from air conditioning tests conducted in a standard test cell at a nominal 50 grains of water/pound of dry air are corrected for humidity to 75 grains of water/pound of dry air (see the relationship of § 86.144–94(c)(7)(iv)(B)).

[61 FR 54898, Oct. 22, 1996]

EFFECTIVE DATE NOTE: At 61 FR 54898, Oct. 22, 1996, § 86.162–00 was added. This section contains information collection and recordkeeping requirements and will not become effective until approval has been given by the Office of Management and Budget.

§ 86.162–03 Approval of alternative air conditioning test simulations.

(a) Upon petition from a manufacturer or upon the Agency's own initiative, the Administrator will approve a simulation of the environmental cell for air conditioning test (SC03) described in § 86.160–00 providing that the procedure can be run by the Administrator for SEA and in-use enforcement testing and providing that the following criteria are met:

(1) In deciding whether approvals will be granted, the Administrator will consider data showing how well the simulation matches environmental cell test data for the range of vehicles to be covered by the simulation including items such as the tailpipe emissions, air conditioning compressor load, and fuel economy.

(2) For any simulation approved under paragraph (a) of this section, the manufacturer must agree to be subject to an ongoing yearly correlation spot check as described in § 86.163–00.

(3) Once a simulation is approved and used by a manufacturer for testing for a given vehicle, EPA agrees to use the simulation test procedure for all official testing conducted on that vehicle by the Agency for certification, SEA, and recall purposes, excluding spot check testing and vehicles which fail the spot check criteria as described in § 86.163–00.

(4) EPA will moniter the aggregate results of spot check testing and full environmental test cells. If EPA determines, based on such aggregate results, that any simulation is producing test results consistantly below those from a full environmental test cell, EPA may review its approval of the simulation.

(b) [Reserved]

[61 FR 54899, Oct. 22, 1996]

EFFECTIVE DATE NOTE: At 61 FR 54899, Oct. 22, 1996, § 86.162–03 was added. This section contains information collection and recordkeeping requirements and will not become effective until approval has been given by the Office of Management and Budget.

§ 86.163–00 Spot check correlation procedures for vehicles tested using a simulation of the environmental test cell for air conditioning emission testing.

This section is applicable for vehicles which are tested using a simulation of the environmental test cell approved under the provisions of § 86.162–00(a).

(a) The Administrator may select up to five emission data vehicles (one emission data vehicle for small volume manufacturers), including vehicles submitted for running change approval, each model year for any manufacturer undergoing the spot checking procedures of this section.

(b) Testing conducted under this section (including testing performed in an environmental test cell) will be considered as official data as described in § 86.091–29 and used in determining compliance with the standards. Such testing must comply with all applicable emission standards of subpart A of this part. Retests for the purpose of emission compliance will be allowed using the procedures described in § 86.091–29.

(c) *Spot check procedures.* (1) Subject to the limitations of paragraphs (a) and (d)(2)(iii) of this section, the Administrator may require that one or more of the test vehicles which use a simulation rather than actual testing in an environmental test cell for air conditioning emission testing be submitted at a place the Administrator will designate for air conditioning emission testing in an environmental test cell as

described in § 86.160–00. The Administrator may order this testing to be conducted at a manufacturer facility. All manufacturers which use a simulation instead of environmental cell testing must have access to an environment test cell meeting the requirements of § 86.161–00 to perform this testing.

(2) An air conditioning emission test will be performed as described in § 86.162–00 in a full environmental test cell.

(i) The results of the original simulation test and the full environmental test cell required in paragraph (c)(1) of this section are compared. In order to pass the spot check, the test results must pass both the following two criteria:

(A) The NO_X emission results of the simulation test must be at least 85% of the NO_X emission results of the environmental chamber test.

(B) The fuel consumption of the simulation test must be at least 95% of the fuel consumption of the environmental chamber test.

(ii) If either of two criteria of paragraph (c)(2)(i) of this section were not met, a retest is allowed. The manufacturer may elect to conduct either a retest of the simulation procedure or the environmental chamber testing. In order to pass the spot check, the test results must pass both the following two criteria using the retest test result.

(A) The NO_X emission results of the simulation test must be at least 85% of the NO_X emission results of the environmental chamber test.

(B) The fuel consumption of the simulation test must be at least 95% of the fuel consumption of the environmental chamber test.

(iii) If either of the two criteria of paragraph (c)(2)(ii) of this section were not met, a second retest is allowed. The procedure not selected for the first retest must be used for the second retest, yielding two test results for each procedure. In order to pass the spot check, the test results must pass both the following two criteria using the average test result for each procedure:

(A) The NO_X emission results of the simulation test must be at least 85% of the NO_X emission results of the environmental chamber test.

(B) The fuel consumption of the simulation test must be at least 95% of the fuel consumption of the environmental chamber test.

(iv) If the spot check criteria have not passed after any of the initial test, the first retest, or the second retest the spot check is considered failed.

(d) *Consequences of failing a spot check.* (1) If the emission results of the testing using the environmental test chamber passes all the applicable standards, those test results may be used to obtain a certificate of conformity.

(2) The Administrator will allow up to 60 days for the manufacturer to supply additional data addressing the correlation of the simulation with a full environmental test cell.

(i) If that data prove to the satisfaction of the Administrator that the simulation produces results that correlate sufficiently with the environmental test chamber, the Administrator may allow the continued use of the simulation.

(ii) Otherwise, the Administrator will determine that the simulation fails to meet adequate correlation levels with full environmental testing. As a consequence of this finding, all future air conditioning emission testing on the population of vehicles represented by the failing-spot-check test vehicle (which may include past model year configurations) will be conducted using an environment chamber or a different (or corrected) approved simulation procedure.

(iii) For each vehicle that fails a spot check, the Administrator may select up to two additional vehicles to test for the spot check that do not count against the five vehicle limit of paragraph (a) of this section.

(e) EPA will monitor the aggregate results of spot check testing and full environmental test cells. If EPA determines, based on such aggregate results, that any simulation (other than the AC1 and AC2 procedures described in paragraphs (b) and (c) of this section for the 2000, 2001, and 2002 model years) is producing test results consistently below those from a full environmental

test cell, EPA may review its approval of the simulation.

[61 FR 54899, Oct. 22, 1996]

§ 86.164–00 Supplemental Federal Test Procedure calculations.

(a) The provisions of § 86.144–94 (b) and (c) are applicable to this section except that the NO_X humidity correction factor of § 86.144–94(c)(7)(iv) must be modified when adjusting SC03 environmental test cell NO_X results to 100 grains of water (see paragraph (d) of this section). These provisions provide the procedures for calculating mass emission results of each regulated exhaust pollutant for the test schedules of FTP, US06, and SC03.

(b) The provisions of § 86.144–94(a) are applicable to this section. These provisions provide the procedures for determining the weighted mass emissions for the FTP test schedule (Y_{wm}).

(c)(1) When the test vehicle is equipped with air conditioning, the final reported test results for the SFTP composite (NMHC+NO_X) and optional composite CO standards shall be computed by the following formulas.

(i) $Y_{WSFTP}=0.35(Y_{FTP})+0.37(Y_{SC03})$ $0.28(Y_{US06})$

Where:

(A) Y_{WSFTP}=Mass emissions per mile for a particular pollutant weighted in terms of the contributions from the FTP, SC03, and US06 schedules. Values of Y_{WSFTP} are obtained for each of the exhaust emissions of NMHC, NO_X, and CO.

(B) Y_{FTP}=Weighted mass emissions per mile (Ywm) based on the measured driving distance of the FTP test schedule.

(C) Y_{SC03}=Calculated mass emissions per mile based on the measured driving distance of the SC03 test schedule.

(D) Y_{US06}=Calculated mass emissions per mile based on the measured driving distance of the US06 test schedule.

(ii) Composite (NMHC+NO_X) = Y_{WSFTP}(NMHC) + YW_{SFTP}(NO_X)

Where:

(A) Y_{WSFTP}(NMHC)=results of paragraph (c)(1)(i) of this section for NMHC.

(B) Y_{WSFTP}(NO_X)=results of paragraph (c)(1)(i) of this section for NO_X.

(2) When the test vehicle is not equipped with air conditioning, the relationship of paragraph (c)(1)(i) of this section is:

(i) $Y_{WSFTP}=0.72(Y_{FTP})+0.28(Y_{US06})$

Where:

(A) Y_{WSFTP}=Mass emissions per mile for a particular pollutant weighted in terms of the contributions from the FTP and US06 schedules. Values of Y_{WSFTP} are obtained for each of the exhaust emissions of NMHC, NO_X, and CO.

(B) Y_{FTP}=Weighted mass emissions per mile (Ywm) based on the measured driving distance of the FTP test schedule.

(C) Y_{US06}=Calculated mass emissions per mile based on the measured driving distance of the US06 test schedule.

(ii) Composite (NMHC+NO_X) = Y_{WSFTP}(NMHC) + Y_{WSFTP}(NO_X)

Where:

(A) Y_{WSFTP}(NMHC)=results of paragraph (c)(2)(i) of this section for NMHC.

(B) Y_{WSFTP}(NO_X)=results of paragraph (c)(2)(i) of this section for NO_X.

(d) The NO_X humidity correction factor for adjusting NO_X test results to the environmental test cell air conditioning ambient condition of 100 grains of water/pound of dry air is:

K_H (100)=0.8825/[1–0.0047(H–75)]

Where:

H=measured test humidity in grains of water/pound of dry air.

[61 FR 54900, Oct. 22, 1996]

Subpart C—Emission Regulations for 1994 and Later Model Year Gasoline-Fueled New Light-Duty Vehicles and New Light-Duty Trucks; Cold Temperature Test Procedures

SOURCE: 57 FR 31916, July 17, 1992, unless otherwise noted.

§ 86.201–94 General applicability.

(a) This subpart describes procedures for determining the cold temperature carbon monoxide (CO) emission from 1994 and later model year new gasoline-fueled light-duty vehicles and light-duty trucks.

(b) All of the provisions of this subpart are applicable to testing conducted at a nominal temperature of 20 °F (−7 °C).

(c) The provisions that are specially applicable to testing at temperatures between 25 °F (−4 °C) and 68 °F (20 °C) are specified in §86.246–94 of this subpart.

§86.202–94 Definitions.

The definitions in subpart A of this part apply to this subpart.

§86.203–94 Abbreviations.

The abbreviations in subpart A of this part apply to this subpart.

§86.204–94 Section numbering; construction.

(a) In the section number, the two digits following the hyphen designate the first model year for which a section is effective. A section remains effective until superseded.

(b) *Example.* Section 86.204–94 applies to the 1994 and subsequent model years until superseded. If a §86.204–96 is promulgated it would take effect beginning with the 1996 model year; §86.204–94 would apply to model years 1994 through 1995.

§86.205–94 Introduction; structure of this subpart.

(a) This subpart describes the equipment required and the procedures to follow in order to perform gaseous exhaust emission tests on gasoline-fueled light-duty vehicles and light-duty trucks. Subpart A of this part sets forth testing requirements and test intervals necessary to comply with EPA certification procedures.

(b) A section reference without a model year suffix refers to the section applicable for the appropriate model years.

(c) Three topics are addressed in this subpart. Sections 86.206 through 86.215 set forth specifications and equipment requirements; §§86.216 through 86.226 discuss calibration methods and frequency; test procedures and data requirements are listed (in approximate order of performance) in §§86.227 through 86.245.

§86.206–94 Equipment required; overview.

This subpart contains procedures for exhaust emission tests on gasoline-fueled light-duty vehicles and light-duty trucks. Equipment required and specifications are as follows:

(a) *Exhaust emission tests.* Exhaust from gasoline-fueled vehicles is tested for gaseous emissions using the Constant Volume Sampler (CVS) concept (§86.209). Equipment necessary and specifications appear in §§86.208 through 86.214.

(b) *Fuel, analytical gas, and driving schedule specifications.* Fuel specifications for exhaust emission testing for gasoline-fueled vehicles are specified in §86.213. Analytical gases are specified in §86.214. The EPA Urban Dynamometer Driving Schedule (UDDS) for use in gasoline-fueled emission tests is specified in §86.215 and appendix I to this part.

§86.207–94 [Reserved]

§86.208–94 Dynamometer.

(a) For testing that is conducted by the Administrator, the dynamometer shall have a single roll with a nominal diameter of 48 inches (1.22 meters), an electrical power absorption unit for simulation of road load power, flywheels or other means for simulating the inertia weight as specified in §86.229, and a roll or shaft revolution counter or other means for determining distance driven.

(b) For certification testing that is conducted by the manufacturer, a dynamometer with different characteristics may be used provided cold CO emissions are not decreased.

§86.209–94 Exhaust gas sampling system; gasoline-fueled vehicles.

The provisions of §86.109–90 apply to this subpart.

§86.210–94 [Reserved]

§86.211–94 Exhaust gas analytical system.

The provisions of §86.111 apply to this subpart, except that the NO_X analyzer is optional.

§ 86.212–94 [Reserved]

§ 86.213–94 Fuel specifications.

Gasoline having the following specifications will be used by the Administrator. Gasoline having the specifications set forth in the table in this section, or substantially equivalent specifications approved by the Administrator, may be used by the manufacturer except that the octane specification does not apply. In lieu of using gasoline having these specifications, the manufacturer may, for certification testing, use gasoline having the specifications specified in § 86.113–90 provided the cold CO emissions are not decreased. Documentation showing that cold CO emissions are not decreased shall be maintained by the manufacturer and shall be made available to the Administrator upon request.

TABLE—COLD CO FUEL SPECIFICATIONS

Item	ASTM test	Cold CO low octane value or range	Cold CO high octane [1] value or range
(RON+MON)/2, min	D2699	87.8 ± .3	92.3 ± 0.5
Sensitivity, min	D2699	7.5	7.5
Distillation range:			
IBP, °F	D86	76–96	76–96
10% point, °F	D86	98–118	105–125
50% point, °F	D86	179–214	195–225
90% point, °F	D86	316–346	316–346
EP, max, °F	D86	413	413
Sulfur, wt. %	D3120	0.035 ± 0.015	0.020 ± 0.015
Phosphorous, g/U.S gal, max	D3231	0.005	0.005
Lead, g/gal, max		0.01	0.01
RVP, psi	D4953	11.5 ± .3	11.5 ± .3
Hydrocarbon composition	D1319		
Olefins, vol. pct		12.5 ± 5.0	10.0 ± 5.0
Aromatics, vol. pct		26.4 ± 4.0	32.0 ± 4.0
Saturates		Remainder	Remainder

[1] Gasoline having these specifications may be used for vehicles which are designed for the use of high-octane premium fuel.

§ 86.214–94 Analytical gases.

The provisions of § 86.114–94 apply to this subpart.

§ 86.215–94 EPA urban dynamometer driving schedule.

The provisions of § 86.115–78 apply to this subpart.

§ 86.216–94 Calibrations, frequency and overview.

The provisions of § 86.116–94 apply to this subpart.

§ 86.217–94 [Reserved]

§ 86.218–94 Dynamometer calibration.

The provisions of § 86.118–78 apply to this subpart.

§ 86.219–94 CVS calibration.

The provisions of § 86.119–90 apply to this subpart.

§ 86.220–94 [Reserved]

§ 86.221–94 Hydrocarbon analyzer calibration.

The provisions of § 86.121–90 apply to this subpart.

§ 86.222–94 Carbon monoxide analyzer calibration.

The provisions of § 86.122–78 apply to this subpart.

§ 86.223–94 Oxides of nitrogen analyzer calibration.

The provisions of § 86.123–78 apply to this subpart if NO_X measurements are optionally made.

§ 86.224–94 Carbon dioxide analyzer calibration.

The provisions of § 86.124–78 apply to this subpart.

§86.225–94 [Reserved]

§86.226–94 Calibration of other equipment.

The provisions of §86.126 apply to this subpart.

§86.227–94 Test procedures; overview.

The provisions of §86.127–94 (a), (b), and (e) apply to this subpart.

§86.228–94 Transmissions.

The provisions of §86.128–79 apply to this subpart.

§86.229–94 Road load force, test weight, and inertia weight class determination.

(a) Flywheels, electrical forces, or other means of simulating test weight as shown in the table in this paragraph shall be used. If the equivalent test weight specified is not available on the dynamometer being used, the next higher equivalent test weight (not to exceed 250 pounds) available shall be used. Light-duty vehicles over 5750 lbs. loaded vehicle weight shall be tested at a 5,500 lb. equivalent test weight.

Loaded vehicle weight (pounds)	Equivalent test weight (pounds)	Inertia weight class (pounds)
Up–1,062	1,000	1,000
1,063–1,187	1,125	1,000
1,188–1,312	1,250	1,250
1,313–1,437	1,375	1,250
1,438–1,562	1,500	1,500
1,563–1,687	1,625	1,500
1,688–1,812	1,750	1,750
1,813–1,937	1,875	1,750
1,938–2,062	2,000	2,000
2,063–2,187	2,125	2,000
2,188–2,312	2,250	2,250
2,313–2,437	2,375	2,250
2,438–2,562	2,500	2,500
2,563–2,687	2,625	2,500
2,688–2,812	2,750	2,750
2,813–2,937	2,875	2,750
2,938–3,062	3,000	3,000
3,063–3,187	3,125	3,000
3,188–3,312	3,250	3,000
3,313–3,437	3,375	3,500
3,438–3,562	3,500	3,500
3,563–3,687	3,625	3,500
3,688–3,812	3,750	3,500
3,813–3,937	3,875	4,000
3,938–4,125	4,000	4,000
4,126–4,375	4,250	4,000
4,376–4,625	4,500	4,500
4,626–4,875	4,750	4,500
4,876–5,125	5,000	5,000
5,126–5,375	5,250	5,000
5,376–5,750	5,500	5,500
5,751–6,250	6,000	6,000
6,251–6,750	6,500	6,500
6,751–7,250	7,000	7,000
7,251–7,750	7,500	7,500
7,751–8,250	8,000	8,000
8,251–8,750	8,500	8,500
8,751–9,250	9,000	9,000
9,251–9,750	9,500	9,500
9,751–10,000	10,000	10,000

(b) A dynamometer which meets the specifications of §86.208–94(a) shall be adjusted to simulate the operation of a vehicle on the road at 20 °F (−7 °C). Such adjustment may be based on a determination of the road load force profile at 20 °F (−7 °C). Alternatively, the adjustment may be based on a 10 percent decrease in the target coastdown time that is used for FTP testing.

§86.230–94 Test sequence: general requirements.

(a) *Sequence steps.* Figure C94–1 shows the steps encountered as the test vehicle undergoes the procedures subsequently described, to determine conformity with the standards set forth.

Figure C94-1

Cold CO Test Procedure

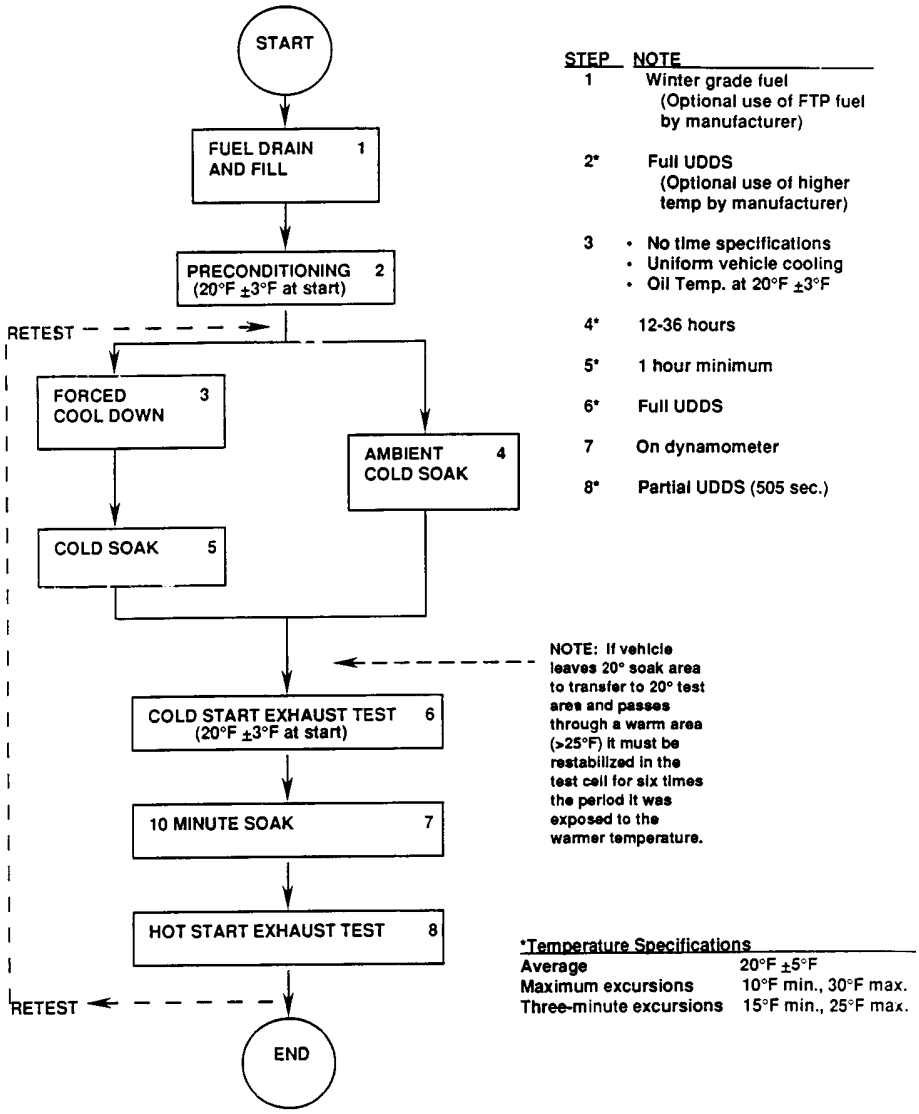

(b) *Driving schedule.* The Urban Dynamometer Driving Schedule (UDDS) test procedure (see § 86.115 and appendix I to this part) is used for vehicle preconditioning and testing.

(c) *Ambient temperature level.* (1) Ambient temperature levels encountered by the test vehicle shall average 20 °F ± 5 °F (−7 °C ± 2.8 °C) and shall not be less than 10 °F (−14 °C) nor more than

30 °F (−1 °C) during vehicle preconditioning, except for preconditioning performed in accordance with §86.232(a)(7), and during all emission testing.

(2) The ambient temperature reported shall be a simple average of the test cell temperatures measured at constant intervals no more than one minute apart. Before the driving cycle may begin, the test cell temperature shall be 20 °F ± 3 °F (−7 °C ± 1.7 °C) when measured in accordance with paragraph (e)(2) of this section. The temperature may not exceed 25 °F (−4 °C) or fall below 15 °F (−9 °C) for more than three consecutive minutes during the test.

(d) *Vehicle positioning.* The vehicle shall be approximately level during all phases of the test sequence to prevent abnormal fuel distribution.

(e) *Engine compartment cooling.* (1) Fixed speed air cooling of the engine compartment with the compartment cover open shall be utilized during testing that is conducted by the Administrator and, optionally for certification testing, by the manufacturer. If a separate movable fan is used, it shall be squarely positioned within 12 inches (30.5 centimeters) of the front of vehicles with front engine compartments. In the case of vehicles with rear engine compartments (or if special designs make the normal front engine positioning impractical), the cooling fan shall be placed in a position to provide sufficient air to maintain vehicle cooling. The fan capacity shall normally not exceed 5,300 cfm (2.50 cubic meters per second). If, however, the manufacturer showed (as provided in §86.135–94(b)) that additional cooling is necessary, the fan capacity may be increased or additional fans used if approved in advance by the Administrator. The cooling air temperature shall be measured at the inlet to the fan.

(2) In lieu of using a separate fan, an air handling system that is integral with the test cell may be used provided comparable air movement is obtained. The cooling air temperature shall be measured in the center of a vertical plane that is located approximately 2 feet in front of the vehicle.

(3) The manufacturer may use, for certification testing, alternative engine compartment cooling fans or systems, including those which provide a variable air flow, if the manufacturer has determined that comparable results are obtained.

(f) *Heater and defroster usage.* The heater and defroster may be used at any temperature and fan settings.

§86.231–94 Vehicle preparation.

The provisions of §86.131–90 apply to this subpart.

§86.232–94 Vehicle preconditioning.

(a) The vehicle shall be moved to the test area and the following operations performed:

(1) The fuel tank(s) shall be filled to approximately the prescribed ''tank fuel volume'' with the test fuel specified §86.213. If the existing fuel in the fuel tank(s) does not meet the specifications contained in §86.213, the existing fuel must be drained prior to the fuel fill. The test fuel shall be at a temperature less than or equal to 60 °F. For the operations in this paragraph (a)(1), the evaporative emission control system shall neither be abnormally purged nor abnormally loaded.

(2) For operation on a 48-inch (1.22 metre) diameter single roll dynamometer, the drive wheel tires shall be inflated to the pressure recommended by the tire manufacturer. For operation on a twin-roll dynamometer, the drive wheel tires may be inflated to a gauge pressure of 40 psi (276 kPa). The drive wheel tire pressures shall be reported with the test results.

(3) The fuel in the vehicle shall be stabilized at 20 F° ± 10 °F (−7 °C ± 5.6 °C) prior to the start of the driving cycle except when vehicle peconditioning is performed in accordance with paragraph (a)(7) of this section.

(4) The vehicle shall be placed, either by being driven or pushed, on a dynamometer and operated through one UDDS cycle.

(5) For those unusual circumstances where additional preconditioning is desired by the manufacturer, such preconditioning may be allowed with the advance approval of the Administrator.

(6) The Administrator may also choose to conduct additional preconditioning. The additional preconditioning shall consist of one or

more driving cycles of the UDDS, as described in paragraph (a)(4) of this section.

(7) The manufacturer may, for certification testing, precondition vehicles at temperatures above 20 °F (−7 °C) and with temperature tolerances greater than those specified in § 86.230(a) if the manufacturer has determined that such preconditioning does not decrease CO emissions during the testing specified in § 86.237.

(b) Within five minutes of completion of preconditioning, the vehicle shall be shut off. During this five minute period, the vehicle shall not experience ambient temperatures less than 10 °F (−12 °C) nor more than 30 °F (−1 °C).

(c) One of the following two methods shall be utilized to stabilize the vehicle before the emissions test:

(1) *Storing at cold temperatures.* The vehicle shall be stored for not less than 12 hours nor for more than 36 hours prior to the cold start exhaust test. The ambient temperature (dry bulb) during this period shall be maintained at an average temperature of 20 °F ± 5 °F (−7 °C ± 2.8 °C) during each hour of this period and shall not be less than 10 °F (−12 °C) nor more than 30 °F (−1 °C). The ambient temperature reported shall be a simple average of the test cell temperature measured at constant intervals no more than one minute apart. In addition, the temperature may not exceed 25 °F (−4 °C) or fall below 15 °F (−9 °C) for more than three consecutive minutes.

(2) *Force-cooling or warming.* (i) The vehicle shall be stored for no more than 36 hours prior to cooling or warming for the cold start exhaust test. The vehicle shall not be stored at ambient temperatures which exceed 86 °F (30 °C) during this period.

(ii) Vehicle cooling may be accomplished by either force-cooling or force-warming the vehicle to the test temperature. If cooling is augmented by fans, the fans shall be placed in a vertical position for maximum drive train and engine cooling, not primarily oil pan cooling. Fans shall not be placed under the vehicle.

(iii) The ambient temperature need only be stringently controlled after the vehicle has been cooled to 20 °F ± 3 °F (−7 °C ± 1.7 °C), as determined by a representative bulk oil temperature. A representative bulk oil temperature is the temperature of the oil measured near the middle of the oil, not at the surface or at the bottom of the oil pan. If two or more diverse locations in the oil are monitored, they must all meet the temperature requirements.

(iv) The vehicle must be stored for at least one hour after it has been cooled to 20 °F ± 3 °F (−7 °C ± 1.7 °C) prior to the cold start exhaust test. The ambient temperature (dry bulb) during this period shall average 20 °F ± 5 °F (−7 °C ± 2.8 °C) and shall not be less than 10 °F (−12 °C) nor more than 30 °F (−1 °C). In addition, the temperature may not exceed 25 °F (−4 °C) or fall below 15 °F (−9 °C) for more than three consecutive minutes.

(d) If the vehicle is stabilized at 20 °F (−7 °C) in a separate area and is moved through a warm area to the test cell, the vehicle must be restabilized in the test cell for at least six times the period the vehicle is exposed to warmer temperatures. The ambient temperature (dry bulb) during this period shall average 20 °F ± 5 °F (−7 °C ± 2.8 °C) and shall not be less than 10 °F (−12 °C) nor more than 30 °F (−1 °C). In addition, the temperature may not exceed 25 °F (−4 °C) or fall below 15 °F (−9 °C) for more than three consecutive minutes. The maximum time for moving a vehicle through a warm area shall be 10 minutes.

§§ 86.233–94—86.234–94 [Reserved]

§ 86.235–94 Dynamometer procedure.

(a) *Overview.* The emission sampling is completed over two test sequences, a ''cold'' start test after a minimum 12-hour and a maximum 36-hour soak according to the provisions of § 86.232 and a ''hot'' start test following the ''cold'' start test by 10 minutes. Engine start-up, operation over the UDDS, and engine shut-down make a complete cold start test. Engine startup and operation over the first 505 seconds of the driving schedule complete the hot start test. The exhaust emissions are diluted with ambient air and a continuously proportional sample is collected for analysis during each phase. The composite samples collected in bags are analyzed for hydrocarbons, carbon

monoxide, carbon dioxide, and, optionally, other pollutants. A parallel sample of the dilution air is similarly analyzed for carbon monoxide and, optionally, hydrocarbons, carbon dioxide, and oxides of nitrogen.

(b) As long as an emission sample is not taken, practice runs over the prescribed driving schedule may be performed at test point for the purpose of finding the minimum throttle action to maintain the proper speed-time relationship or to permit sampling system adjustment.

(c) Humidity should be set low enough to prevent condensation on the dynamometer rolls.

(d) The dynamometer shall be warmed as recommended by the dynamometer manufacturer and using procedures or control methods that assure stability of the residual frictional horsepower.

(e) The time between dynamometer warming and the start of the emission test shall be no longer than 10 minutes if the dynamometer bearings are not independently heated. If the dynamometer bearings are independently heated, the emission test shall begin no longer than 20 minutes after dynamometer warming.

(f) If the dynamometer horsepower must be adjusted manually, it shall be set within one hour prior to the exhaust emission test phase. The test vehicle shall not be used to make the adjustment. Dynamometers using automatic control of preselectable power settings may be set anytime prior to the beginning of the emission test.

(g) The driving distance, as measured by counting the number of dynamometer roll or shaft revolutions, shall be determined for the transient cold start, stabilized cold start, and transient hot start phases of the test.

(h) Four-wheel drive vehicles will be tested in a two-wheel drive mode of operation. Full-time four-wheel drive vehicles will have one set of drive wheels temporarily disengaged by the vehicle manufacturer. Four-wheel drive vehicles which can be manually shifted to a two-wheel drive mode will be tested in the normal on-highway two-wheel drive mode of operation.

§86.236–94 Engine starting and restarting.

The provisions of §86.136 apply to this subpart.

§86.237–94 Dynamometer test run, gaseous emissions.

(a) The complete dynamometer test consists of a cold start drive of approximately 7.5 miles (12.1 kilometers) and a hot start drive of approximately 3.6 miles (5.8 kilometers).

(b) If the preconditioned vehicle is not already on the dynamometer, it shall be pushed into position.

(c) The vehicle is allowed to stand on the dynamometer during the ten minute time period between the cold and hot start test. The cold start test is divided into two periods. The first period, representing the cold start ''transient'' phase, terminates at the end of the deceleration which is scheduled to occur at 505 seconds of the driving schedule. The second period, representing the ''stabilized'' phase, consists of the remainder of the driving schedule, including engine shutdown. The hot start test is identical to the first part or transient phase of the cold start test. Therefore, the hot start test terminates after the first period (505 seconds) is run.

(d) The provisions of §86.137(b) apply to this subpart.

§§86.238–94—86.239–94 [Reserved]

§86.240–94 Exhaust sample analysis.

The provisions of §86.140 apply to this subpart.

§86.241–94 [Reserved]

§86.242–94 Records required.

The provisions of §86.142–90 apply to this subpart.

§86.243–94 [Reserved]

§86.244–94 Calculations; exhaust emissions.

The provisions of §86.144–94 apply to this subpart, except that NO_X measurements are optional. Should NO_X measurements be calculated, note that the humidity correction factor is not valid at colder temperatures.

§ 86.245–94 [Reserved]

§ 86.246–94 Intermediate temperature testing.

(a) This section is applicable to tests which are conducted at an intermediate temperature as defined in § 86.094–2.

(b) For testing during ambient temperatures of less than 50 °F (10 °C), the test procedure is identical to the test procedure that is used for testing at 20 °F (−7 °C) contained in 40 CFR part 86, subpart C.

(c) For testing at temperatures of 50 °F (10 °C) or higher, the FTP shall be used.

Subpart D—Emission Regulations for New Gasoline-Fueled and Diesel-Fueled Heavy-Duty Engines; Gaseous Exhaust Test Procedures

AUTHORITY: Secs. 202, 206, 207, 208, 301(a), Clean Air Act, as amended (42 U.S.C. 1857f–1, 1857f–5, 1857f–5a, 1857f–6, 1857g(a)).

SOURCE: 42 FR 45154, Sept. 8, 1977, unless otherwise noted.

§ 86.301–79 Scope; applicability.

This subpart contains gaseous emission test procedures for gasoline-fueled and Diesel heavy-duty engines. It applies to 1979 and later model years.

§ 86.302–79 Definitions.

The definitions in §§ 86.077–2, 86.078–2, and 86.079–2 apply to this subpart.

§ 86.303–79 Abbreviations.

The abbreviations in § 86.078–3 apply to this subpart.

§ 86.304–79 Section numbering; construction.

(a) The model year of initial applicability is indicated by the section number. The two digits following the hyphen designate the first model year for which a section is effective. A section remains effective until superseded.

Example: Section 86.311–79 applies to the 1979 and subsequent model years until superseded. If a § 86.311–81 is promulgated it would take effect beginning with the 1981 model year; § 86.311–79 would apply to model years 1979 and 1980.

(b) A section reference without a model year suffix refers to the section applicable for the appropriate model year.

(c) Unless indicated, all provisions in this subpart apply to both gasoline-fueled and Diesel heavy-duty engines.

§ 86.305–79 Introduction; structure of subpart.

(a) This subpart describes the equipment required and the procedures to follow in order to perform exhaust emission tests on gasoline-fueled and Diesel heavy-duty engines. Subpart A sets forth the testing requirements and test intervals necessary to comply with EPA certification procedures.

(b) Four topics are addressed in this subpart. Sections 86.306 through 86.318 set forth specifications and equipment requirements; §§ 86.319 through 86.333 discuss calibration methods and frequency; test procedures and data requirements are listed (in approximately chronological order) in §§ 86.334 through 86.343; and calculation formulas are found in §§ 86.344 and 86.345. Alternative procedures and calculations are set forth in §§ 86.346 and 86.347.

§ 86.306–79 Equipment required and specifications; overview.

(a) This subpart contains procedures for both gasoline-fueled and Diesel engine gaseous emission tests. Generally, the equipment required is identical for both types of engines. Equipment required and specifications are found in §§ 86.307 through 86.318.

(b) Some analyzer specifications refer to calibration checks found in §§ 86.320 through 86.332.

§ 86.307–82 Fuel specifications.

(a) *Gasoline.* (1) Gasoline having the following specifications will be used by the Administrator in exhaust emission testing. Gasoline having the following specifications or substantially equivalent specifications approved by the Administrator shall be used by the manufacturer in exhaust testing, except that the lead and octane specifications do not apply.

Item designation	ASTM	Leaded	Unleaded
Octane, research, minimum	D2699	100	96
PB (organic), grams/U.S. gallon		[1] 1.4	0.00–0.05
Distillation Range:			
IBP, °F	D86	75–95	75–95
10 pct point, °F	D86	120–135	120–135
50 pct point, °F	D86	200–230	200–230
90 pct point, °F	D86	300–325	300–325
EP, °F (maximum)	D86	415	415
Sulfur, weight percent, maximum	D1266	0.10	0.10
Phosphorus, grams/U.S. gallon, maximum		0.01	0.005
RVP pounds per square inch	D323	8.0–9.2	8.0–9.2
Hydrocarbon composition:			
Olefins, percent, maximum	D1319	10	10
Aromatics, percent maximum	D1319	35	35
Saturates	D1319	([2])	([2])

[1] Minimum. [2] Remainder.

(2) Gasoline representative of commercial gasoline which will be generally available through retail outlets shall be used in service accumulation. For leaded fuel the minimum lead content shall be equal to the average lead content found in regular leaded gasoline in the fuel survey prescribed by the Administrator. Where the Administrator determines that engines represented by a test engine will be operated using gasoline of different lead content from that prescribed in this paragraph, he may consent in writing to use of a gasoline with a different lead content. The octane rating of the gasoline used shall be no higher than 4.0 research octane numbers above the minimum recommended by the manufacturer and have a minimum sensitivity of 7.5 octane numbers for unleaded fuel and 7.0 octane numbers for leaded fuel, where sensitivity is defined as research octane number minus motor octane number.

(b) *Diesel Fuel.* (1) The diesel fuels employed for testing shall be clean and bright, with pour and cloud points adequate for operability. The diesel fuel may contain nonmetallic additives as follows: Cetane improver, metal deactivator, antioxident, dehazer, antirust pour depressant, dye, and dispersant.

(2) Diesel fuel meeting the following specifications, or substantially equivalent specifications approved by the Administrator, shall be used in exhaust emissions testing. The grade of diesel fuel recommended by the engine manufacturer commercially designated as ''Type 1–D'' or ''Type 2–D'', shall be used.

Item	ASTM test method No.	Type 1–D	Type 2–D
Cetane Number	D613, D86	48–54	42–50
Distillation range:			
IBP, °F		330–390	340–400
10 percent point, °F		370–430	400–460
50 percent point, °F		410–480	470–540
90 percent point, °F		460–520	550–610
EP, °F		500–560	580–660
Gravity, °AP1	D287	40–44	33–37
Total sulfur, percent	D129 or D2622	0.05–0.02	0.2–0.5
Hydrocarbon composition	D1319		
Aromatics, percent (minimum		[1] 8	[1] 27
Paraffins, naphthenes, olefins		([2])	([2])
Flashpoint, °F (minimum)	D93	120	130
Viscosity, centistokes	D445	1.6–2.0	2.0–3.2

[1] Minimum.
[2] Remainder.

(3) Diesel fuel meeting the following specifications, or substantially equivalent specifications approved by the Administrator, shall be used in service accumulation. The grade of diesel fuel recommended by the engine manufacturer, commercially designated as

''Type 1–D'' or ''Type 2–D'', shall be used.

Item	ASTM test method No.	Type 1–D	Type 2–D
Cetane (minimum)	D613	42–56	38–58
Distillation range 90 pct point, °F	D86	440–530	540–630
Gravity, °AP1	D287	39–45	30–42
Total sulfur, percent	D129 or D2622	0.05	0.2
Flashpoint, °F (minimum)	D96	120	130
Viscosity, centistokes	D445	1.2–2.2	1.5–4.5

[1] Minimum.

(4) Other petroleum distillate fuels may be used for testing and service accumulation provided:

(i) They are commercially available;

(ii) Information, acceptable to the Administrator, is provided to show that only the designated fuel would be used in customer service;

(iii) Use of a fuel listed under paragraphs (b) (2) and (3) of this section would have a detrimental effect on emissions or durability; and

(iv) Written approval from the Administrator of the fuel specifications was provided prior to the start of testing.

(5) The specification range of the fuels to be used under paragraphs (b) (2), (3), and (4) of this section shall be reported in accordance with § 86.082–21(b)(3).

(c) Fuels not meeting the specifications set forth in this section may be used only with the advance approval of the Administrator.

[46 FR 50494, Oct. 13, 1981, and 47 FR 49807, Nov. 2, 1982]

§ 86.308–79 Gas specifications.

(a) *Analyzer gases.* (1) *Calibration gases for the CO and CO_2* analyzers shall have zero grade nitrogen as a diluent. Combined CO and CO_2 span gases are permitted. Zero grade nitrogen shall be the diluent for CO and CO_2 span gases.

(2) Calibration or span gases for the hydrocarbon analyzer shall be propane with zero-grade nitrogen as a diluent when testing gasoline-fueled engines. For Diesel engine tests the diluent shall be zero-grade air.

(3) Calibration or span gases for the NO_X analyzer shall be NO named as NO_X with a maximum NO_2 concentration of 5 percent of the nominal value. Zero-grade nitrogen shall be the diluent.

(4) Zero-grade gases for hydrocarbon analyzers shall be nitrogen when testing gasoline-fueled engines and air when testing Diesel engines.

(5) Zero-grade gases for the carbon monoxide, carbon dioxide and oxides of nitrogen analyzers shall be either zero-grade air or zero-grade nitrogen.

(6) The allowable zero grade gas (air or nitrogen) impurity concentrations shall not exceed 2 ppmC hydrocarbon, 10 ppm carbon monoxide, 400 ppm carbon dioxide and 1 ppm nitric oxide.

(7) ''Zero-grade air'' includes artificial ''air'' consisting of a blend of nitrogen and oxygen with oxygen concentrations between 18 and 21 mole percent.

(b) *Calibration gas.* Calibration gas values are to be derived from NBS ''Standard Reference Materials'' (SRM's) or other gas standards approved by the Administrator. The uncertainty of the assigned calibration gas values shall not exceed 2.0 percent of the assigned value. The uncertainty is defined as the sum of the precision errors (at the 90 percent confidence level) and the bias errors. Precision and bias errors apply to both the equipment and the derivation procedures.

(c) *Span gas.* Span gas values are to be derived from NBS ''Standard Reference Materials'' (SRM's) or other gas standards approved by the Administrator. The uncertainty of the assigned calibration gas values shall not exceed 3.0 percent of the assigned value. The uncertainty is defined as the sum of the precision errors (at the 90 percent confidence level) and the bias errors. Precision and bias errors apply to both the equipment and the derivation procedures.

(d) *Hydrocarbon analyzer fuel*—(1) *The fuel shall contain 40±2 percent hydrogen.*

The balance shall be helium. The mixture shall contain less than 2 ppmC hydrocarbon.

(2) *Alternate pure hydrogen fuel.* Some HFID's are designed to operate on pure hydrogen. Generally the HFID fuel is incompatible with good relative hydrocarbon response.

(i) For Diesel engines this fuel is not recommended. However, this fuel may be used if the engine manufacturer demonstrates, on each basic combustion system (i.e., 4 cycle DI, 2 cycle DI, 4 cycle pre-cup, etc.) that an HFID using this fuel produces comparable results to an HFID using 40% H_2/60% He fuel. These data must be submitted to and approved by the Administrator prior to testing. Pure H_2 fuel, that may be allowed for testing, must contain at least 99.0 percent hydrogen and contain less than 2 ppmC hydrocarbon.

(ii) For gasoline-fueled engines, pure hydrogen fuel for the HFID is not allowed.

(e) *Hydrocarbon analyzer burner air.* The concentration of oxygen must be within 1 mole percent of the oxygen concentration of the burner air used in the latest oxygen interference check (%O_2 I). If the difference in oxygen concentration is greater than 1 mole percent, then the oxygen interference must be checked and the analyzer adjusted if necessary, to meet the %O_2 I requirements. The burner air must contain less than 2 ppmC hydrocarbon.

(f) Oxygen interference check gases shall contain propane with 350 ppmC±75 ppmC hydrocarbon. The concentration value shall be determined to calibration gas tolerances by chromatographic analysis of total hydrocarbons plus impurities or by dynamic blending. Nitrogen shall be the predominant diluent with the balance oxygen. Blends required for gasoline-fueled and Diesel engine testing are as follows:

Applicability	O_2 concentration (percent)	Balance
Diesel	21 (20 to 22)	N_2
Diesel and gasoline	10 (9 to 11)	N_2
Do	5 (4 to 6)	N_2
Gasoline	0 (0 to 1)	N_2

(g) Proportioning and blending devices may be used to obtain required gas concentration.

[42 FR 45154, Sept. 8, 1977, as amended at 46 FR 50495, Oct. 13, 1981; 47 FR 49807, Nov. 2, 1982]

§86.309–79 Sampling and analytical system; schematic drawing.

(a) Any variation from the specifications in this subpart including performance specifications and emission detection methods may be used only with prior approval by the Administrator.

(b) *Schematic drawing.* (1) An example of a sampling and analytical system which may be used for testing under this subpart is shown in Figure D79–1. All components or parts of components that are wetted by the sample or corrosive calibration gases shall be either chemically cleaned stainless steel or inert material, e.g. polytetrafluoroethylene resin. The use of ''gauge savers'' or ''protectors'' with nonreactive diaphragms to reduce dead volumes is permitted. The specific detection methods to be used for each exhaust component can be found in §86.316 for CO. §86.317 for HC, and §86.318 for NO_X. Additional components such as instruments, valves, solenoids, pumps, switches, etc. may be employed to provide additional information and coordinate the functions of the component systems.

(2) The following requirements must be incorporated in each system used for testing under this subpart.

(i) All analyzers must obtain the sample to be analyzed from the same sample line.

(ii) The sample transport system from the engine exhaust pipe to the HC analyzer and the NO_X analyzer must be heated as is indicated in Figure D79–1.

(iii) Carbon monoxide and carbon dioxide measurements must be made on a dry basis. Specific requirements for the means of drying the sample can be found in §86.309 (b)(5) and §86.311(e).

(iv) All NDIR analyzers must have a pressure gauge immediately downstream of the analyzer. The gauge tap must be within 2 inches of the analyzer exit port. Gauge specifications can be found in §86.309(b)(3).

(v) All bypass and analyzer flows exiting the analysis system must be measured. Capillary flows such as in HFID and CL analyzers are excluded. For each ND IR analyzer with a flow meter located upstream of the analyzer, an upstream pressure gauge must be used. The gauge tap must be within 2 inches of the analyzer entrance port.

(vi) Calibration or span gases for the NO_X measurement system must pass through the NO_2 to NO converter.

(vii) The temperature of the NO_2 to NO converter must be displayed continuously.

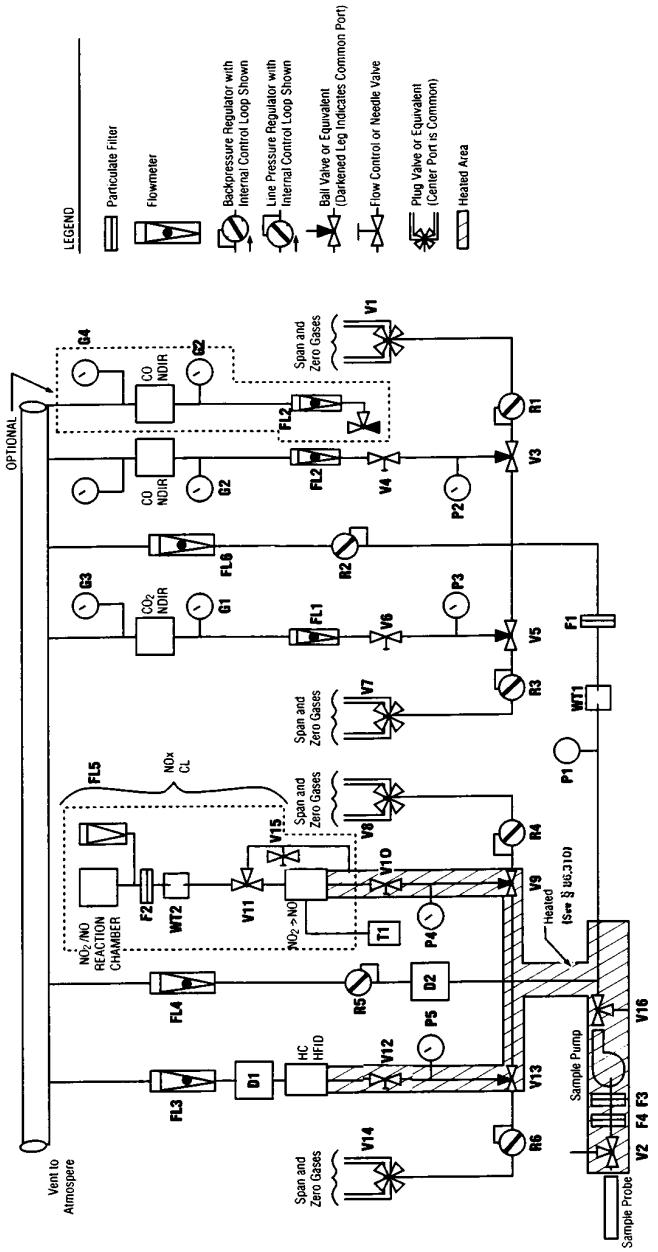

Figure D79-1 HEAVY-DUTY EXHAUST GAS SAMPLING AND ANALYTICAL TRAIN

(c) *System components list.* The following is a list of components shown in Fig. D79–1 by numeric identifier.

(1) *Filters.* Glass fiber filter paper is permitted for F1, F2, and F3. Optional filter F4 is a coarse filter for large particulates.

(i) F1—Fine particulate filter.

(ii) F2—Fine particulate filter.

(iii) F3—Fine heated particulate filter.

(iv) F4—Coarse heated particulate filter.

(2) *Flowmeters.* (i) Flowmeters FL 1 and FL 2 indicate sample flow rates through the CO and CO_2 analyzers.

(ii) Flowmeters FL 3, FL 4, FL 5, and FL 6 indicate bypass flow rates.

(3) *Gauges.* Downstream gauges are required for any system used for testing under this subpart. Upstream gauges may be required under this subpart per § 86.309(b)(2)(v).

(i) Upstream gauges G1 and G2 measure the input to the CO and CO_2 analyzers.

(ii) Downstream gauges G3 and G4 measure the exit pressure of the CO and CO_2 analyzers. If the normal operating range of the downstream gauges is less than 3 inches of water, then the downstream gauges must be capable of reading both pressure and vacuum.

(4) *Pressure gauges.* (i) P1—bypass pressure.

(ii) P2, P3, P4 and P5—sample or span pressure at inlet to flow control valves.

(5) *Water traps.* Water traps WT1, and WT2 to remove water from the sample. A water trap performing the function of WT1 and meeting the specifications in § 86.311(e) is required for any system used for testing under this subpart. Chemical dryers are not an acceptable method of removing the water. Water removal by condensation is acceptable. Means other than condensation may be used only with prior approval from the Administrator.

(6) *Regulators.* (i) R1, R3, R4, and R6—linepressure regulators to control span pressure at inlet to flow control valves.

(ii) R2 and R5—back presssure regulators to control sample pressure at inlet to flow control valves.

(7) *Valves.* (i) V1, V7, V8, and V14—selector valves to select zero or calibration gases.

(ii) V2—optional heated selector valve to purge the sample probe, perform leak checks, or to perform hang-up checks.

(iii) V3 and V5—Selector valves to select sample or span gases.

(iv) V4, V6, and V15—flow control valves.

(v) V9 and V13—heated selector valve to select sample or span gases.

(vi) V10 and V12—heated flow control valves.

(vii) VII—Selector valve to select NO_X or bypass mode in the chemiluminescence analyzer.

(viii) V16—heated selector valve to perform leak checks.

(8) *Pump.* Sample transfer pump to transport sample to analyzers.

(9) *Temperature sensor.* A temperature sensor (T1) to measure the NO_2 to NO converter temperature is required for any system used for testing under this subpart.

(10) *Dryer.* Dryers D1 and D2 to remove the water from the bypass flows to prevent condensation in flowmeters FL3, FL4, and FL6.

§ 86.310–79 Sampling and analytical system; component specifications.

(a) *Temperature.* (1) *For gasoline-fueled engines any heated component;*

(i) In the HC sample path must be maintained above 110 °C (230 °F) and shall not exceed 230 °C (446 °F).

(ii) In the NO_X sample path must be maintained above 60 °C (140 °F) and shall not exceed 230 °C (446 °F).

(2) *For Diesel engines any heated component;*

(i) In the HC sample path must be maintained above 180 °C (356 °F) and shall not exceed 230 °C (446 °F).

(ii) In the NO_X sample path must be maintained above 60 °C (140 °F) and shall not exceed 230 °C (446 °F).

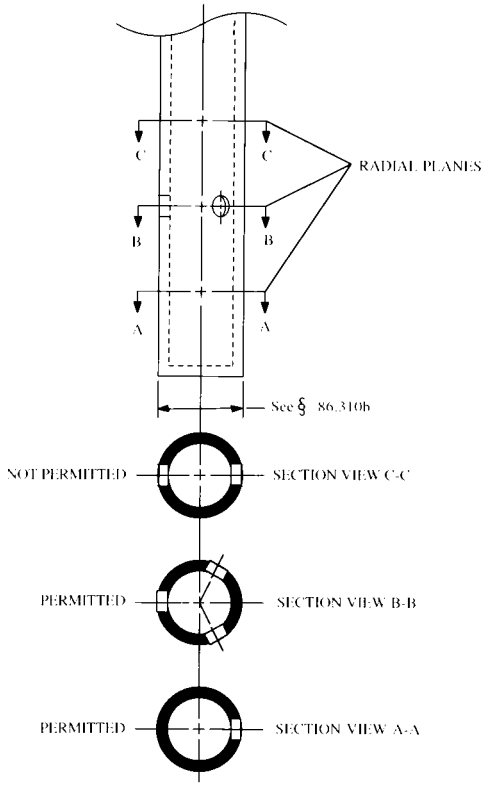

Figure D79-2 SAMPLE PROBE AND TYPICAL HOLE SPACINGS

(3) The sample line outside wall temperature must be maintained at the temperature specified in this paragraph. An exception is made for the first 4 feet of sample line from the exhaust duct. The upper temperature tolerance for this 4 foot section is waived and only the minimum temperature specification applies.

(b) *Sample probe.* (1) The sample probe shall be a straight, closed end, stainless steel, multi-hole probe. The Inside Diameter (I.D.) shall not be greater than the I.D. of the sample line (+.010 in.). The wall thickness of the probe shall not be greater than .040 inch. The fitting that attaches the probe to the exhaust pipe shall be as small as practical in order to minimize heat loss from the probe.

(2) There shall be a minimum of three holes in the probe. The spacing of the radial planes for each hole in the probe must be such that they cover approximately equal cross-sectional areas of the exhaust duct. The angular spacing of the holes must be approximately equal. The angular spacing of any two holes in one plane may not be 180° ±20° (i.e., section C–C of Figure D79–2). The holes should be sized such that each has approximately the same flow. If only three holes are used, they may not all be in the same radial plane. See Figure D79–2.

(3) The probe shall extend radially across the exhaust duct. The probe must pass through the approximate center and must extend across at least 80 percent of the diameter of the duct.

(c) *Sample transfer.* (1) The maximum I.D. of the sample line shall not exceed 0.52 inch.

(2) If valve V2 is used, the sample probe must connect directly to valve V2. The location of optional valve V2 may not be greater than 4 feet from the exhaust duct.

(3) The location of optional valve V16 may not be greater than 24 inches from the sample pump. The leakage rate for this section on the pressure side of the sample pump may not exceed the leakage rate specification for the vacuum side of the pump.

(d) *Venting.* All vents including analyzer vents, bypass flow, and pressure relief vents of regulators should be vented in such a manner to avoid endangering personnel in the immediate area.

[42 FR 45154, Sept. 8, 1977, as amended at 46 FR 50495, Oct. 13, 1981, and 47 FR 49807, Nov. 2, 1982]

§ 86.311–79 Miscellaneous equipment; specifications.

(a) *Chart recorders.* (1) The minimum chart speed allowed is 3 inches per minute for gasoline-fueled engines and 0.5 inches per minute for Diesel engines.

(2) When testing gasoline-fueled engines all chart recorders (analyzers, torque, rpm, etc.) shall be provided with Automatic markers which indicate one second intervals. Preprinted chart paper (one second intervals) may be used in lieu of the automatic markers provided the correct chart speed is used.

(b) *Accuracy of temperature measurements.* (1) The following temperature measurements shall be accurate to within 1.2 °C:

(i) Temperature measurements used in calculating the engine intake humidity:

(ii) The temperature of the fuel in volume measuring flow rate devices;

(iii) The temperature of the sample within the water trap(s).

(2) All other temperature measurements shall be accurate within 2.5 °C.

(c) *Intake air humidity and temperature measurements.* (1) Humidity conditioned air supply. Air that has had its absolute humidity altered is considered humidity-conditioned air. For this type of intake air supply, the humidity measurements must be made within the intake air supply system, and after the humidity conditioning has taken place.

(2) *Nonconditioned air supply.* Humidity measurements in non-conditioned intake air supply systems must be made in the intake air stream entering the supply system. Alternatively, the humidity measurements can be measured within the intake air supply stream.

(3) Engine intake air temperature measurement must be made within 48 inches of the engine. The measurement location must be made either in the supply system or in the air stream entering the supply system.

(d) *Sample component surface temperature.* For each component (pump, sample line section, filters, etc.) in the heated portion of the sampling system that has a separate source of power or heating element, use engineering judgment to locate the coolest portion of that component and monitor the temperature at that location. If several components are within an oven, then only the surface temperature of the component with the largest thermal mass and the oven temperature need be measured.

(e) If water is removed by condensation, the sample gas temperature or sample dew point must be monitored either within the water trap or downstream. It may not exceed 7 °C (45 °F).

[42 FR 45154, Sept. 8, 1977, as amended at 46 FR 50495, Oct. 13, 1981; 47 FR 49807, Nov. 2, 1982]

§ 86.312–79 Dynamometer and engine equipment specifications.

(a) *Dynamometer.* (1) The dynamometer test stand and other instruments for measurement of power output shall be accurate to within 2 percent of point at all power settings above 10 percent of full-scale. Below 10 percent of full-scale the accuracy shall be within 5 percent of point. The dynamometer must be capable of performing the test cycle described in § 86,335 or § 86.336. Dynamometers used for testing gasoline-fueled engines must have sufficient motoring capability to meet the test requirements. A 60-tooth wheel in combination with a frequency counter shall be considered an absolute standard for engine speed.

(2) *Dynamometer calibration weights.* A minimum of 6 calibration weights for each range used are required. The weights must be equally spaced and traceable to within 0.5 percent of NBS weights. Laboratories located in foreign countries may certify calibration weights to local government bureau standards.

(b) *Engine cooling.* Means of engine cooling which will maintain the engine operating temperatures (e.g., intake air, oil, water, etc.) at approximately the same temperature as specified by the manufacturer shall be used. Auxiliary fan(s) may be used to maintain engine cooling during operation on the dynamometer.

(c) *Exhaust system.* (1) When testing gasoline-fueled engines:

(i) A chassis-type exhaust system including muffler(s) shall be used. The exhaust system must have a single tail pipe. For engines designed for a dual exhaust system, a standard or specially fabricated ''Y'' pipe may be used. The ''Y'' pipe may be located upstream of a single muffler or downstream of a single muffler or downstream of dual mufflers. The potential increase in backpressure due to the use of a single tail pipe instead of dual pipes may be compensated for by using larger than standard exhaust system components downstream of the ''Y'' pipe. For systems with the ''Y'' pipe upstream of the muffler, the backpressure at the exhaust manifold exit with the single exhaust system must be comparable to the standard dual exhaust system under the test conditions specified in §86.335.

(ii) For all catalyst systems the distance from the exhaust manifold flange(s) to the catalyst shall be the same as in the vehicle configuration unless the manufacturer provides temperature data showing equivalent performance at another location.

(iii) For catalyst systems, the probe shall be located in the single exhaust pipe and from 2 to 10 feet downstream of the catalyst(s) and at least 2 feet downstream of the ''Y'' intersection of any ''Y'' pipe (if used).

(iv) For noncatalyst systems, the probe shall be located in the single exhaust pipe downstream of the muffler(s) and from 3 to 20 feet downstream from the exhaust manifold flange or turbocharger exit flange. The probe shall also be at least 2 feet downstream of the ''Y'' intersection of any ''Y'' pipe (if used).

(v) For all exhaust systems, the probe shall be located at least 24 inches from the end of the tail pipe. Additional exhaust pipe may be added to the tail pipe to meet the specification.

(2) When testing Diesel engines, a noninsulated exhaust system extending 15±5 feet from the exhaust manifold, or the crossover junction in the case of Vee engines, shall be used. The exhaust back pressure must be within 0.2 inch Hg. of the upper limit at maximum rated horsepower, as established by the engine manufacturer in his sales and service literature for vehicle application. A conventional automotive muffler of a size and type commonly used with the engine being tested shall be employed in the exhaust system during smoke emission testing. The terminal 2 feet of the exhaust pipe shall be a circular cross section and be free of elbows and bends. The end of the pipe shall be cut off squarely. The terminal 2 feet of the exhaust pipe shall have a nominal inside diameter in accordance with the engine being tested, as specified below:

Maximum rated horsepower	Exhaust pipe inside diameter (inches)
Less than 101	2
101 to 200	3
201 to 300	4
301 or more	5

[42 FR 45154, Sept. 8, 1977, as amended at 43 FR 52922, Nov. 14, 1978]

§86.313–79 Air flow measurement specifications; diesel engines.

(a) The air flow measurement method used must have a range large enough to accurately measure the air flow over the engine operating range during the test. Overall measurement accuracy must be ±2 percent of full-scale value of the measurement device for all modes except the idle and 2-percent modes. For the idle and 2-percent modes, the measurement accuracy shall be ±5 percent or less of the full-scale value. The Administrator must be advised of the method used prior to testing.

(b) Corrections to the measured air mass-flow-rate shall be made when an engine system incorporates devices that add or subtract air mass (air injection, bleed air, etc.). The method used to determine the air mass from these devices shall be approved by the Administrator.

(c) An engine air inlet system presenting an air inlet restriction within 1 inch of water of the upper limit for the engine operating condition which results in maximum air flow, as established by the engine manufacturer in his sales and service literature, for the Diesel engine being tested shall be used.

§ 86.314–79 Fuel flow measurement specifications.

(a) The fuel flow rate measurement instrument must have a minimum accuracy of ±1 percent of full-scale flow rate for each measurement range used. An exception for Diesel engines is allowed at the idle and 2-percent power points. For these modes, the minimum accuracy is ±2 percent of full-scale flow rate for each measurement range used. The controlling parameters are the elapsed time measurement of the event and the weight or volume measurement. Restrictions on these parameters are:

(1) The error in the elapsed time measurement of the event must not be greater than 1 percent of the absolute event time. This includes errors in starting and stopping the clock as well as the period of the clock.

(2) For Diesel engines only, if the mass of fuel consumed is measured by discrete weights, then the error in the actual weight of the fuel consumed must not be greater than ±1 percent of the measuring weight. An exception for Diesel engines is allowed at the idle and 2-percent power points. For these modes the error in the actual weight of the fuel consumed must not be greater than ±2 percent of the measuring weight.

(3) If the mass of fuel consumed is measured electronically (load cell, load beam, etc.), the error in the actual weight of fuel consumed must not be greater than ±1 percent of the full-scale value of the electronic device.

(4) If the mass of fuel consumed is measured by volume flow and density, the error in the actual volume consumed must not be greater than ±1 percent of the full-scale value of the volume measuring device.

(b) For the devices that have varying mass scales (electronic weight, volume, density, etc.), measurements may not be used for calculations if the measurement is less than 20 percent of full scale.

(c) *Option*. Complete flow-rate measurement systems may be used below 20 percent of full-scale measurement as long as the combination of mass and time measurements indicate a flow rate that has an error of less than 5 percent of the absolute flow rate.

§ 86.315–79 General analyzer specifications.

(a) *Analyzer response time*. The analyzer must respond to an instantaneous step change at the entrance to the analyzer with a response equal to 95 percent of that step change in 6.0 seconds or less on all ranges used. The step change shall be at least 60 percent of full-scale chart deflection. For NO_x analyzers using a water trap, the response time increase due to the water trap and associated plumbing need not be included in the analyzer response time.

(b) *Precision*. The precision of the analyzer must be no greater than ±1 percent of full-scale concentration for each range used above 155 ppm (or ppm C), or ±2 percent for each range used below 155 ppm (or ppm C). The precision is defined as 2.5 times the standard deviation(s) of 10 repetitive responses to a given calibration or span gas.

(c) *Noise*. The analyzer peak-to-peak response to zero and calibration or span gases over any 10-second period shall not exceed 2 percent of full/scale chart deflection on all ranges used.

(d) *Zero drift*. The analyzer zero-response drift during a 1-hour period shall be less than 2 percent of full-scale chart deflection on the lowest range used. The zero-response is defined as the mean response including noise to a zero-gas during a 30-second time interval.

(e) *Span drift*. The analyzer span drift during a 1-hour period shall be less

than 2 percent of full-scale chart deflection on the lowest range used. The analyzer span is defined as the difference between the span-response and the zero-response. The span-response is defined as the mean response including noise to a span gas during a 30-second time interval.

(Secs. 206, 301(a), Clean Air Act as amended (42 U.S.C. 7525, 7601(a)))

[42 FR 45154, Sept. 8, 1977, as amended at 44 FR 16917, Mar. 20, 1979]

§86.316–79 Carbon monoxide and carbon dioxide analyzer specifications.

(a) Carbon monoxide and carbon dioxide measurements are to be made with nondispersive infrared (NDIR) an analyzers.

(b) The use of linearizing circuits is permitted.

(c) The minimum water rejection ratio (maximum CO_2 interference) as measured by §86.321 shall be:

(1) For CO analyzers, 1000:1.

(2) For CO_2 analyzers, 100:1.

(d) The minimum CO_2 rejection ratio (maximum CO_2 interference) as measured by §86.322 for CO analyzers shall be 5000:1.

(e) *Zero suppression*. Various techniques of zero suppression may be used to increase readability, but only with prior approval by the Administrator.

§86.317–79 Hydrocarbon analyzer specifications.

(a) Hydrocarbon measurements are to be made with a heated flame ionization detector (HFID) analyzer.

(b) *Option*. A non-heated flame ionization detector (FID) that measures hydrocarbon emissions on a dry basis is permitted for gasoline-fueled testing; *Provided*, That equivalency is demonstrated to the Administrator. With the exception of temperatures, all specifications contained in subpart D apply to the optional system.

(c) The analyzer shall be fitted with a constant temperature oven housing the detector and sample-handling components. It shall maintain temperature with 2 °C of the set point. The detector, oven, and sample-handling components within the oven shall be suitable for continuous operation at temperatures to 200 °C.

(d) Fuel and burner air shall conform to the specifications in §86.308.

(e) The percent of oxygen interference must be less than 3 percent, as specified in §86.331(d)(7).

(f) Premixed burner air:

(1) For Diesel engines, premixing a small amount of air with the HFID fuel prior to combustion within the HFID burner is not recommended as a means of improving oxygen interference (%O_2 I). However, this procedure may be used if the engine manufacturer demonstrates on each basic combustion system (i.e., 4 cycle DI, 2 cycle DI, 4 cycle precup, etc.) that an HFID using this procedure produces comparable results to an HFID not using this procedure. These data must be submitted to the Administrator for his approval prior to testing.

(2) For gasoline-fueled engines, premixing burner air with the HFID fuel is not allowed.

§86.318–79 Oxides of nitrogen analyzer specifications.

(a) Oxides of nitrogen are to be measured with a chemiluminescense analyzer.

(1) The NO_X sample must be heated per §86.309(a) and §86.310(a) up to the NO_2 to NO converter.

(2) For high vacuum CL analyzers with heated capillary modules, supplying a heated sample to the capillary module is sufficient.

(3) The NO_2 to NO convertor efficiency shall be at least 90 percent.

(4) The quench interference must be less than 3.0 percent as measured in §86.327.

(b) *Option*. The oxides of nitrogen may be measured with an NDIR analyzer system that meets the following specifications:

(1) The system shall include an NO_2 to NO converter, a water trap, and an NDIR analyzer in that order.

(2) The NO_2 to NO converter shall obtain a sample directly from the heated sample line.

(3) The water trap shall meet the specifications in §86.311(e).

(4) The NO NDIR analyzer shall be calibrated per §86.330.

(5) The minimum water rejection ratio (maximum water interference)

for the NO NDIR analyzer shall be 5,000:1 (see § 86.321).

(6) The minimum CO_2 rejection ratio (maximum CO_2 interference) for the NO NDIR analyzer shall be 30,000:1 (see § 86.322).

§ 86.319–79 Analyzer checks and calibrations; frequency and overview.

(a) Prior to initial use and after major repairs, bench check each analyzer (see § 86.320).

(b) At least monthly during testing, check the NO_X converter efficiency, as described in § 86.332.

(c) At least once every 30 days during testing, perform the following:

(1) Leak check the pressure side of the system (see § 86.328). If the option described in § 86.328(b)(2) is used, a pressure leak check is not required.

(2) Calibrate all analyzers (see §§ 86.330 through 86.332).

(3) Check the analysis system response time (see § 86.329). If the option described in § 86.329(b) is used, a response time check is not required.

(4) Verify that the automatic data collection system (if used) meets the chart reading requirements found in § 86.343.

(5) Check the fuel flow measurement instrument to insure that the specifications in § 86.314 are met. Flow meters of the tapered tube and float design (rotometers) or the balance beam principle need be checked only every 90 days.

(d) At least once every 90 days during testing check the water rejection ratio and the CO_2 rejection ratio on all NDIR analyzers (see §§ 86.321 and 86.322).

(e) At least once every 180 days during testing check the dynamometer test stand and power output instrumentation (see § 86.333).

[42 FR 45154, Sept. 8, 1977, as amended at 58 FR 58422, Nov. 1, 1993]

§ 86.320–79 Analyzer bench check.

(a) Prior to initial use and after major repairs verify that each analyzer complies with the following specifications:

(1) Response time (see § 86.315(a)).

(2) Precision (see § 86.315(b)).

(3) Noise (see § 86.315(c)).

(4) Zero drift (see § 86.315(d)).

(5) Span drift (see § 86.315(e)).

(6) Water rejection ratio, NDIR analyzers only (see §§ 86.316(c) and 86.318 (b)(5).

(7) CO_2 rejection ratio, NDIR analyzers only (see §§ 86.316(d) and 86.318(b)(6)).

(8) Quench check, CL analyzers only (see § 86.327).

(b) If a stainless steel NO_2 to NO converter is used, condition all new or replacement converters. The conditioning consists of either purging the converter with air for a minimum of 4 hours or until the converter efficiency is greater than 90 percent. The converter must be at operational temperature while purging. Do not use this procedure prior to checking converter efficiency on in-use converters.

§ 86.321–79 NDIR water rejection ratio check.

(a) Zero and span the analyzer on the lowest range that will be used.

(b) Introduce a saturated mixture of water and zero gas at room temperature directly to the analyzer.

(c) Determine and record the analyzer operating pressure (GP) in absolute units in pascals. Gauges G3 and G4 may be used if the values are converted to the correct units.

(d) Determine and record the temperature of the zero-gas mixture.

(e) Record the analyzers' response (AR) in ppm to the saturated zero-gas mixture.

(f) For the temperature recorded in step (d), determine the saturation vapor presssure (P_{WB}) from § 86.344(d).

(g) Calculate the water concentration (Z) in the mixture from:

$$Z = (P_{WB}/GP)(10^6)$$

(h) Calculate the water rejection ratio (WRR) from:

$$WRR = (Z/AR)$$

§ 86.322–79 NDIR CO_2 rejection ratio check.

(a) Zero and span the analyzer on the lowest range that will be used.

(b) Introduce a CO_2 calibration gas of at least 10 percent CO_2 or greater to the analyzer.

(c) Record the CO_2 calibration gas concentration in *ppm*.

(d) Record the analyzers' response (AR) in *ppm* to the CO_2 calibration gas.

(e) Calculate the CO_2 rejection ratio (CO_2RR) from:

$CO_2RR = (ppm\ CO_2)/AR$

§86.327–79 Quench checks; NO_X analyzer.

(a) Perform the reaction chamber quench check for each model of high vacuum reaction chamber analyzer prior to initial use.

(b) Perform the reaction chamber quench check for each new analyzer that has an ambient pressure or ''soft vacuum'' reaction chamber prior to initial use. Additionally, perform this check prior to reusing an analyzer of this type any time any repairs could potentially alter any flow rate into the reaction chamber. This includes, but is not limited to, sample capillary, ozone capillary, and if used, dilution capillary.

(c) Quench check as follows:

(1) Calibrate the NO_X analyzer on the lowest range that will be used for testing.

(2) Introduce a mixture of CO_2 calibration gas and NO_X calibration gas to the CL analyzer. Dynamic blending may be used to provide this mixture. Dynamic blending may be accomplished by analyzing the CO_2 in the mixture. The change in the CO_2 value due to blending may then be used to determine the true concentration of the NO_X in the mixture. The CO_2 concentration of the mixture shall be approximately equal to the highest concentration experienced during testing. Record the response.

(3) *Recheck the calibration.* If it has changed more than ±1 percent of full scale, recalibrate and repeat the quench check.

(4) Prior to testing, the difference between the calculated NO_X response and the response of NO_X in the presence of CO_2 (step 2) must not be greater than 3.0 percent of full-scale. The calculated NO_X response is based on the calibration performed in step (1).

(Secs. 206, 301(a), Clean Air Act as amended (42 U.S.C. 7525, 7601(a)))

[42 FR 45154, Sept. 8, 1977, as amended at 44 FR 16917, Mar. 20, 1979]

§86.328–79 Leak checks.

(a) *Vacuum side leak check.* (1) Any location within the analysis system where a vacuum leak could affect the test results must be checked.

(2) The maximum allowable leakage rate on the vacuum side is 0.5 percent of the in-use flow rate for the portion of the system being checked. the analyzer flows and bypass flows may be used to estimate the in-use flow rates.

(3) The sample probe and the connection between the sample probe and valve V2 (Figure D79–1) may be excluded from the leak check.

(b) *Pressure side leak check.* (1) The maximum allowable leakage rate on the pressure side in 5 percent of the in-use flow rate.

(2) Option: If the flow rate for each flow meter is equal to or greater than the flow rate recorded in §86.329(b)(1)(ii), then a pressure side leak check is not required.

§86.329–79 System response time; check procedure.

(a) Check the system response time by the following procedure:

(1) Stabilize the operating temperature of the sample line, sample pump, and heated filters.

(2) Introduce an HC span gas into the sampling system at the sample probe or valve V2 at atmospheric pressure. Simultaneously, start the time measurement.

(3) When the HC instrument response is 95 percent of the span gas concentration used, stop the time measurement.

(4) If the elapsed time is more than 20.0 seconds, make necessary adjustments.

(5) Repeat with the CO, CO_2, and NO_X instruments and span gases.

(b) *Option.* If the following parameters are determined, the initial system response time may be generally applied to future checks.

(1) *Analyzer and bypass flow rates.* (i) Determine by experimentation the minimum analyzer and bypass flow rates individually and in combination that will produce a response time as close as possible to 20.0 seconds per paragraph (a) of this section.

(ii) Record the highest minimum flow rate for each flow meter as determined in step (i).

(2) *Capillary flow analyzers.* This procedure is applicable only to analyzers that have sample capillaries such as the HFID and CL analyzers. It is also assumed that the system has sample/span valves that perform the function of valves V9 and V13 in Figure D79–1.

(i) Operate the analyzer(s) at the in-use capillary pressure.

(ii) Adjust the bypass flow rate to the flow rate recorded in paragraph (b)(1)(ii) of this section.

(iii) Measure and record the response time from the sample/span valve(s) per paragraph (a) of this section.

(iv) The response time (step (iii)) can be determined by switching from the ''sample'' position to the ''span'' position of the sample/span valve and observing the analyzer response on a chart recorder. Normally, the ''sample'' position would select a ''room air'' sample and the ''span'' position would select a span gas.

(v) Adjust the bypass flow rate to the normal in-use value.

(vi) Measure and record the response time from the sample/span valve(s) per paragraph (a) of this section.

(vii) Determine the slowest response time (step (iii) or step (iv)) and add 2 seconds to it.

§ 86.330–79 NDIR analyzer calibration.

(a) *Detector optimization.* If necessary, follow the manufacturer's instructions for initial start-up and basic operating adjustments.

(b) *Calibration curve.* Develop a calibration curve for each range used as follows:

(1) Zero the analyzer.

(2) Span the analyzer to give a response of approximately 90 percent of full-scale chart deflection.

(3) *Recheck the zero response.* If it has changed more than 0.5 percent of full scale, repeat steps (1) and (2).

(4) Record the response of calibration gases having nominal concentrations of 15, 30, 45, 60, 75, and 90 percent of full-scale concentration.

(5) *Generate a calibration curve.* The calibration curve shall be of fourth order or less, have five or fewer coefficients, and be of the form of equation (1) or (2). Include zero as a data point. Compensation for known impurities in the zero gas can be made to the zero-data point. The calibration curve must fit the data points within 2 percent of point or 1 percent of full scale, whichever is less.

$$y = Ax^4 + Bx^3 + Cx^2 + Dx + E \qquad (1)$$

$$y = \frac{x}{Ax^4 + Bx^3 + Cx^2 + Dx + E} \qquad (2)$$

where:

y = concentration

x = chart deflection

(6) *Option.* A new calibration curve need not be generated if: (i) A calibration curve conforming to step (5) exists; (ii) The responses generated in step (4) are within 1 percent of full scale or 2 percent of point, whichever is less, of the responses predicted by the calibration curve for the gases used in step (4).

(7) If multiple range analyzers are used, only the lowest range must meet the curve fit requirements below 15 percent of full scale.

(c) If any range is within 2 percent of being linear a linear calibration may be used. To determine if this criterion is met:

(1) Perform a linear least-square regression on the data generated. Use an equation of the form $y = mx$, where x is the actual chart deflection and y is the concentration.

(2) Use the equation $z = y/m$ to find the linear chart deflection *(z)* for each calibration gas concentration *(y)*.

(3) Determine the linearity (%L) for each calibration gas by:

$$\text{Percent } L = \frac{(z - x)}{\text{Full-scale linear chart deflection}}(100)$$

(4) The linearity criterion is met if the %*L* is less than ±2 percent for each data point generated. For each emission test, a calibration curve of the form $Y = mx$ is to be used. The slope (*m)* is defined for each range by the spanning process.

[42 FR 45154, Sept. 8, 1977, as amended at 46 FR 50495, Oct. 13, 1981; 47 FR 49807, Nov. 2, 1982]

§86.331–79 Hydrocarbon analyzer calibration.

The following steps are followed in sequence to calibrate the hydrocarbon analyzer. It is suggested, but not required, that efforts be made to minimize relative response variations.

(a) If necessary, follow manufacturer's instructions for instrument start-up and basic operating adjustments.

(b) Set the oven temperature 5 °C hotter than the required sample-line temperature. Allow at least one-half hour after the oven has reached temperature for the system to equilibrate.

(c) *Initial fuel flow adjustment.* With the fuel and air-flow rates set at the manufacturer's recommendations, introduce a 350 ppmC±75 ppmC span gas to the detector. Determine the response at a given fuel flow from the difference between the span-gas response and the zero-gas response. Incrementally adjust the fuel flow above and below the manufacturer's specification. Record the span and zero response at these fuel flows. A plot of the difference between the span and zero response versus fuel flow will be similar to the one shown in Fig. D79–3.

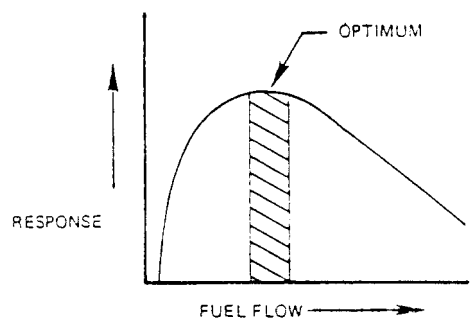

Figure D79-3 RESPONSE VS. FUEL FLOW

Adjust the fuel-flow rate to the rich side of the curve, as shown. This is initial flow-rate setting and may not be the final optimized flow rate.

(d) *Oxygen interference optimization.* Choose a range where the oxygen interference check gases (see §86.308) will fall in the upper 50 percent. Conduct this test with the oven temperature set as required. Oxygen interference check gas specifications are found in §86.308.

(1) Zero the analyzer.

(2) Span the analyzer with the zero-percent oxygen blend for gasoline-fueled engines. Diesel engine instruments shall be spanned with the 21-percent oxygen blend.

(3) *Recheck zero response.* If it has changed more than 0.5 percent of full scale repeat paragraphs (d) (1) and (2) of this section.

(4) Introduce the 5 percent and 10 percent oxygen interference check gases.

(5) *Recheck the zero response.* If it has changed more ±1 percent of full scale, repeat the test.

(6) Calculate the percent of oxygen interference ($\%O_2I$) for each mixture in step (4).

$$\text{Percent } O_2 I = \frac{B - \text{Analyzer response } (ppmC)}{B}(100)$$

$$\text{Analyzer response} = \frac{A}{\text{Percent of full-scale analyzer response due to } A} \times (\text{Percent of full-scale analyzer response due to } B)$$

A = hydrocarbon concentration (*ppmC*) of the span gas used in step (2).

B = hydrocarbon concentration (*ppmC*) of the oxygen interference check gases used in step (4).

(7) The percent of oxygen interference (%O_2I) must be less than ±3.0 percent for all required oxygen interference check gases prior to testing.

(8) If the oxygen interference is greater than the specifications, incrementally adjust the air flow above and below the manufacturer's specifications, repeating paragraphs (d) (1) through (7) of this section for each flow.

(9) If the oxygen interference is greater than the specification after adjusting the air flow, vary the fuel flow and thereafter the sample flow, repeating paragraphs (d) (1) through (7) of this section for each new setting.

(10) If the oxygen interference is still greater than the specifications, repair or replace the analyzer, FID fuel, or burner air prior to testing. Repeat this section with the repaired or replaced equipment or gases.

(e) *Linearity check.* For each range used, check linearity as follows:

(1) With the fuel flow, air flow and sample flow adjust to meet the oxygen interference specification, zero the analyzer.

(2) Span the analyzer using a calibration gas that will provide a response of approximately 90 percent of full-scale concentration.

(3) *Recheck the zero response.* If it has changed more than 0.5 percent of full scale, repeat steps (1) and (2).

(4) Record the response of calibration gases having nominal concentrations of 30, 60, and 90 percent of full-scale concentration. It is permitted to use additional concentrations.

(5) Perform a linear least square regression on the data generated. Use an equation of the form $y = mx$, where x is the actual chart deflection and y is the concentration.

(6) Use the equation $z = y/m$ to find the linear chart deflection (z) for each calibration gas concentration (y).

(7) Determine the linearity (%L) for each calibration gas by:

$$\text{Percent } L = \frac{(z - x)}{\text{Full-scale linear chart deflection}}(100)$$

(8) The linearity criterion is met if the %L is less than ±2 percent for each data point generated. Below 40 *ppmC* the linearity criterion may be expanded to ±4 percent. For each emission test, a calibration curve of the form $y = mx$ is to be used. The slope (m) is defined for each range by the spanning process.

(9) If the %L for any point exceeds the specifications in step (8), the air, fuel, and sample-flow rates may be varied within the boundaries of the oxygen interference specifications.

(10) If the %L for any data point still exceeds the specifications, repair or replace the analyzer, FID fuel, burner air, or calibration bottles prior to testing. Repeat the procedures of this section with the repaired or replaced equipment or gases.

(f) *Optimized flow rates.* The fuel-flow rate, air-flow rate and sample-flow rate

are defined as ''optimized'' at this point.

§86.332–79 Oxides of nitrogen analyzer calibration.

(a) At least monthly during testing, perform a converter efficiency check as described in paragraph (b) of this section. Perform a monthly linearity check as described in paragraph (c) of this section.

(b) *Converter-efficiency check.* The apparatus described and illustrated in Figure D79–4 is to be used to determine the conversion efficiency of devices that convert NO_2 to NO. The following procedure is to be used in determining the values to be used in the equation below:

(1) Follow the manufacturer's instructions for instrument startup and operation.

(2) Zero the oxides of nitrogen analyzer.

(3) Connect the outlet of the NO_X generator (see Figure D79–4) to the sample inlet of the oxides of nitrogen analyzer which has been set to the most common operating range.

(4) Introduce into the NO_X generator-analyzer system a span gas with a NO concentration equal to approximately 80 percent of the most common operating range.

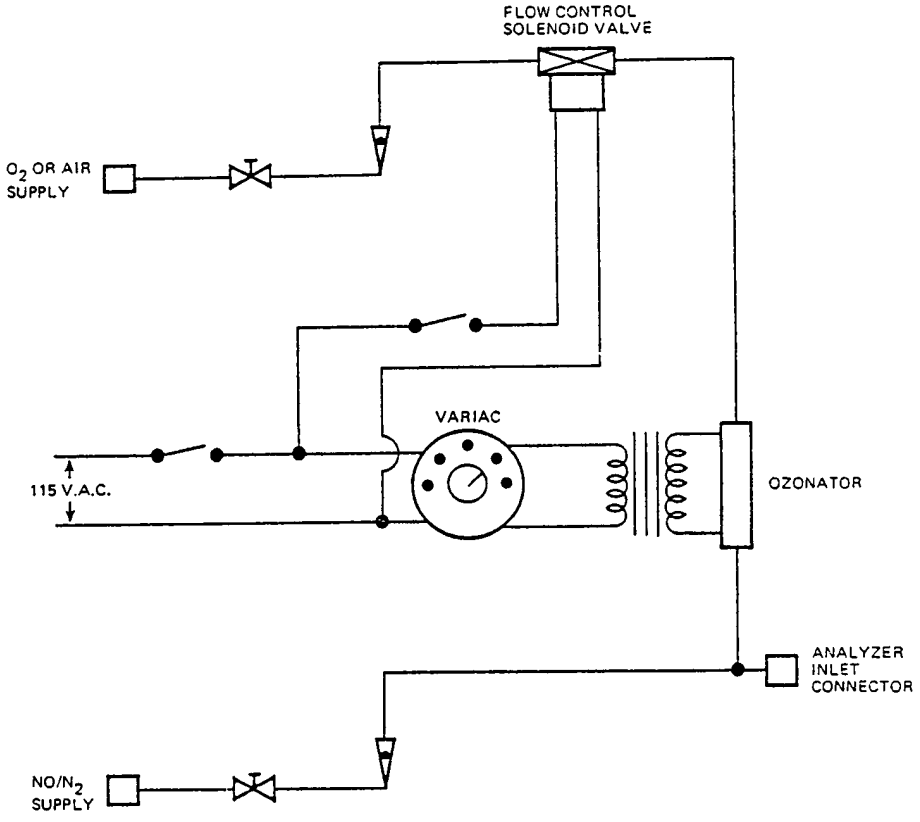

FIGURE D79-4 NO_x CONVERTER EFFICIENCY DETECTOR

(5) With the oxides of nitrogen analyzer in the NO Mode, record the concentration of NO indicated by the analyzer.

(6) Turn on the NO_X generator O_2 (or air) supply and adjust the O_2 (or air) flow rate so that the NO indicated by the analyzer is about 10 percent less than indicated in step (5). Record the concentration of NO in this $NO+O_2$ mixture.

(7) Switch the NO_X generator to the generation mode and adjust the generation rate so that the NO measured on the analyzer is 20 percent of that measured in step (5). There must be at least 10 percent unreacted NO at this point. Record the concentration of residual NO.

(8) Switch the oxides of nitrogen analyzer to the NO_X mode and measure total NO_X. Record this value.

(9) Switch off the NO_X generation, but maintain gas flow through the system. The oxides of nitrogen analyzer will indicate the total NO_X in the $NO+O_2$ mixture. Record this value.

(10) Turn off the NO_X generator O_2 (or air) supply. The analyzer will now indicate the total NO_X in the original NO in N_2 mixture. This value should be no more than 5 percent above the value indicated in step (4).

(11) Calculate the efficiency of the NO_X converter by substituting the concentrations obtained into the following equation:

Percent Efficiency=[1+(a–b)/(c–d)]×100
where:
a=concentration obtained in step (8).
b=concentration obtained in step (9).
c=concentration obtained in step (6).
d=concentration obtained in step (7).

The efficiency of the converter shall be greater than 90 percent. Adjustment of the converter temperature may be necessary to maximize the efficiency. If the converter does not meet the conversion-efficiency specifications, repair or replace the unit prior to testing. Repeat the procedures of this section with the repaired or new converter.

(c) *Linearity check.* For each range used, check linearity as follows:

(1) With the operating parameters adjusted to meet the converter efficiency check and the quench checks, zero the analyzer.

(2) Span the analyzer using a calibration gas that will give a response of approximately 90 percent of full-scale concentration.

(3) *Recheck the zero response.* If it has changed more than 0.5 percent of full scale, repeat steps (1) and (2).

(4) Record the response of calibration gases having nominal concentrations of 30, 60 and 90 percent of full-scale concentration. It is permitted to use additional concentrations.

(5) Perform a linear least-square regression on the data generated. Use an equation of the form $y=mx$ where x is the actual chart deflection and y is the concentration.

(6) Use the equation $z=y/m$ to find the linear chart deflection (z) for each calibration gas concentration (y).

(7) Determine the linearity (%L) for each calibration gas by:

$$\text{Percent } L = \frac{(z-x)}{\text{Full-scale linear chart deflection}}(100)$$

(8) The linearity criterion is met if the %L is less than ±2 percent of each data point generated. For each emission test, a calibration curve of the form $y=mx$ is to be used. The slope (m) is defined for each range by the spanning process.

(9) If the %L exceeds ±2 percent for any data point generated, repair or replace the analyzer or calibration bottles prior to testing. Repeat the procedures of this section with the repaired or replaced equipment or gases.

(10) Perform a converter-efficiency check (see paragraph (b) of this section).

(11) The operating parameters are defined as ''optimized'' at this point.

(d)–(e) [Reserved]

[42 FR 45154, Sept. 8, 1977, as amended at 46 FR 50495, Oct. 13, 1981; 47 FR 49807, Nov. 2, 1982; 52 FR 47869, Dec. 16, 1987; 58 FR 58423, Nov. 1, 1993]

§86.333–79 Dynamometer calibration.

(a) If necessary, follow the manufacturer's instructions for initial start-up and basic operating adjustments.

(b) Check the dynamometer torque measurement for each range used by the following:

(1) Warm up the dynamometer following the equipment manufacturer's specifications.

(2) Determine the dynamometer calibration moment arm. Equipment manufacturer's data, actual measurement, or the value recorded from the previous calibration used for this subpart may be used.

(3) Calculate the indicated torque (*IT*) for each calibration weight to be used by:

IT = calibration weight (lb) x calibration moment arm (ft)

(4) Attach each calibration weight specified in §86.312 to the moment arm at the calibration distance determined in step (2). Record the power measurement equipment response (ft-lb) to each weight.

(5) For each calibration weight, compare the torque value measured in step (4) to the calculated torque determined in step (3).

(6) The measured torque must be within 2 percent of the calculated torque.

(7) If the measured torque is not within 2 percent of the calculated torque, adjust or repair the system. Repeat steps (1) through (6) with the adjusted or repaired system.

(c) *Option.* A master load-cell or transfer standard may be used to verify the in-use torque measurement system.

(1) The master load-cell and read out system must be calibrated with weights at each test weight specified in §86.312–79. The calibration weights must be traceable to within 0.1 percent of NBS weights.

(2) Warm up the dynamometer following the equipment manufacturer's specifications.

(3) Attach the master load-cell and loading system.

(4) Load the dynamometer to a minimum of 6 equally spaced torque values as indicated by the master load-cell for each in-use range used.

(5) The in-use torque measurement must be within 2 percent of the torque measured by the master system for each load used.

(6) If the in-use torque is not within 2 percent of the master torque, adjust or repair the system. Repeat step (2) through step (5) with the adjusted or repaired system.

(d) The dynamometer calibration must be completed within 2 hours from the completion of the dynamometer warm-up.

§86.334–79 Test procedure overview.

(a) The test consists of prescribed sequences of engine operating conditions to be conducted on an engine dynamometer. The exhaust gases generated during engine operation are sampled for specific component analysis through the analytical train. The test is applicable to engines equipped with catalytic or direct-flame afterburners, induction system modifications, or other systems, or to uncontrolled engines.

(b) The tests are designed to determine the brake-specific emissions of hydrocarbons, carbon monoxide, and oxides of nitrogen. The gasoline-fueled engine test consists of 1 warm-up cycle and 1 hot cycle. The Diesel engine test consists of 3 idle modes and 5 power modes at each of 2 speeds which span the typical operating range of Diesel engines. These procedures require the determination of the concentration of each pollutant, the fuel flow and the power output during each mode. The measured values are weighted and used to calculate the grams of each pollutant emitted per brake-horsepower hour.

(c)(1) When an engine is tested for exhaust emissions or is operated for service accumulation on an engine dynamometer, the complete engine shall be tested, with all emission control devices installed and functioning.

(2) Evaporative emission controls need not be connected if data are provided to show that normal operating

conditions are maintained in the engine induction system.

(3) On air cooled engines, the fan shall be installed.

(4) Additional accessories (e.g., oil cooler, alternators, air compressors, etc.) may be installed with advance approval by the Administrator.

(d) All emission control systems installed on or incorporated in a new motor vehicle engine shall be functioning during all procedures in this subpart. In cases of component malfunction or failure, maintenance to correct component failure or malfunction shall be authorized in accordance with § 86.079–25.

§ 86.335–79 Gasoline-fueled engine test cycle.

(a) The following test sequence shall be followed in dynamometer operation tests of gasoline-fueled heavy-duty engines. Diesel engines are covered in § 86.336.

Cycle No.	Mode No.	Mode	Observed torque (percent of maximum observed)	Time in mode-seconds	Cumulative time-seconds	Weighting factors
1	1	Idle		60	60	0.232
1	2	Cruise	25	60	120	.077
1	3	PTA	55	60	180	.147
1	4	Cruise	25	60	240	.077
1	5	PTD	10	60	300	.057
1	6	Cruise	25	60	360	.077
1	7	FL	90	60	420	.113
1	8	Cruise	25	60	480	.077
1	9	CT		60	540	.143
2	10	Cruise	25	60	600	.077
2	11	PTA	55	60	660	.147
2	12	Cruise	25	60	720	.077
2	13	PTD	10	60	780	.057
2	14	Cruise	25	60	840	.077
2	15	FL	90	60	900	.113
2	16	Cruise	25	60	960	.077
2	17	CT		60	1,020	.143
2	18	Idle		60	1,080	.232

(b) Except for idles, the engine dynamometer shall be operated at a constant speed of 2000 rpm±100 rpm. Speed deviations, not to exceed 200 rpm, will be allowed during the first 10 seconds of each mode.

(c) The times in-mode specified in paragraph (a) for the CT modes are ±2 seconds. All other times in-mode are ±4 seconds.

(d) The first 35 seconds of each 60 second engine power mode is allowed for engine-dynamometer stabilization. After this stabilization period the torque must be held at the specified value ±5 percent until the exhaust gas analysis period. During the exhaust gas analysis period, the last 10 seconds of each nonclosed throttle mode the engine torque must be at the specified value ±2 percent of the maximum torque observed. For example, mode 3 torque shall be held between 53 and 57 percent of maximum torque (55±2 percent) during the exhaust analysis period. Prior to the analysis period but excluding the first 35 seconds of the mode, the torque shall be held between 50 and 60 percent of maximum torque (55%±5%).

(e) The idle operating mode shall be carried out at the manufacturer's recommended curb-idle engine speed. Arrive at the last idle mode by closing the throttle, braking the dynamometer to the engine idle speed, and unloading the dynamometer.

(f) The CT operating mode shall be carried out at the same engine speed as specified in paragraph (b) of this section.

(g) If the Administrator determines that an engine shall be tested as an automatic transmission code engine, then a load shall be applied by the dynamometer during the idle modes (1 and 18) such that the engine speed is decreased from the recommended dynamometer-idle speed to the recommended curb-idle speed. The engine

idle torque recorded for the calculations in §86.345 shall be zero.

(h) If the operating conditions specified in paragraph (a) of this section for modes 2 through 8, and 10 through 16 cannot be maintained, the Administrator may authorize deviations from the specified load conditions. Such deviations shall not exceed 5 percent of the maximum torque at the test speed. The minimum deviations, above and below the specified load, necessary for stable operation shall be determined by the manufacturer and approved by the Administrator prior to the test run. Emission tests shall be performed by operating the engine at the higher approved load setting during cycle 1 and at the lower approved load setting during cycle 2. The weighting factors shall be as specified in paragraph (a) of this section.

(Secs. 206, 301(a), Clean Air Act as amended (42 U.S.C. 7525, 7601(a)))

[42 FR 45154, Sept. 8, 1977, as amended at 44 FR 16917, Mar. 20, 1979; 47 FR 49813, Nov. 2, 1982]

§86.336–79 Diesel engine test cycle.

(a) The following 13-mode cycle shall be followed in dynamometer operation tests of heavy-duty Diesel engines. Gasoline-fueled engines are covered in §86.335.

Test Segment	Mode No.	Engine Speed	Observed torque (percent of maximum observed)	Time in mode (minutes)		Maximum cumulative time (minutes)
				Minimum	Maximum	
1	1	Curb-idle		4.5	6.0	
1	2	Intermediate	2	4.5	6.0	
1	3	do	25	4.5	6.0	
1	4	do	50	4.5	6.0	42
1	5	do	75	4.5	6.0	
1	6	do	100	4.5	6.0	
1	7	Curb-idle		4.5	6.0	
2	8	Rated	100	4.5	6.0	
2	9	do	75	4.5	6.0	
2	10	do	50	4.5	6.0	36
2	11	do	25	4.5	6.0	
2	12	do	2	4.5	6.0	
2	13	Curb-idle		4.5	6.0	

(b) During each mode the specified speed shall be held to within 50 rpm. Torque for each mode must be held at the specified value ±2 percent of the maximum torque observed. For example, mode 4 torque shall be held between 48 and 52 percent of maximum torque (50 ±2%).

(c) If the operating conditions specified in paragraph (b) of this section for modes 3, 4, 5, 9, 10, and 11 cannot be maintained, the Administrator may authorize deviations from the specified load conditions. Such deviations shall not exceed 10 percent of the maximum torque at the test speed. The minimum deviations, above and below the specified load, necessary for stable operation shall be determined by the manufacturer and approved by the Administrator prior to the test run. Emission tests shall be performed at each of the approved load settings, one above and one below the operating conditions specified in paragraph (a) of this section. The emission values obtained shall be calculated in accordance with §86.345 except that the weighting factor shall be 0.04.

(d) If the Administrator determines that an engine shall be tested as an automatic transmission code engine, then a load shall be applied by the dynamometer during the idle modes (1, 7, and 13) such that the engine speed is decreased from the recommended dynamometer-idle speed to the recommended curb-idle speed. The engine-idle torque recorded for the calculations in §86.345 shall be zero.

§86.337–79 Information.

The following information, as applicable, shall be recorded for each test:

(a) *Engine description and specification.* A copy of the information specified in this paragraph must accompany each engine sent to the Administrator for compliance testing. The manufacturer need not record the information specified in this paragraph for each test if the information, with the exception of paragraphs (a) (3), (12), and (13), is included in the manufacturer's Part I.

(1) Engine-system combination.

(2) Engine identification numbers.

(3) Number of hours of operation accumulated on engine.

(4) Rated maximum horsepower and torque.

(5) Maximum horsepower and torque speeds.

(6) Engine displacement.

(7) Governed speed.

(8) Manufacturer's start-up and warm-up reference, (gasoline-fueled engines only).

(9) Curb-idle rpm.

(10) Dynamometer-idle rpm (automatic transmission code engines only).

(11) Maximum horsepower at 2000 rpm (gasoline-fueled engines only).

(12) Fuel consumption and maximum torque at 2000 rpm (gasoline-fueled engines only).

(13) Fuel consumption at maximum power and torque (Diesel engines only).

(14) Maximum air flow (Diesel engines only).

(15) Air inlet restriction (Diesel engines only).

(16) Exhaust pipe diameter(s) (Diesel engines only).

(17) Maximum exhaust system back pressure (Diesel engines only).

(18) Maximum exhaust system back pressure at 2000 rpm, if applicable (gasoline-fueled engines only).

(b) *Test data; general.* This information may be recorded at any time between 4 hours prior to the test and 4 hours after the test.

(1) Engine-system combination.

(2) Engine identification number.

(3) Instrument operator.

(4) Engine operator.

(5) Number of hours of operation accumulated on the engine prior to beginning the warm-up portion of the test.

(6) Fuel identification.

(7) Date of most recent analytical assembly calibration.

(8) All pertinent instrument information such as tuning, gain, serial numbers, detector number, calibration curve numbers, etc. As long as this information is traceable, it may be summarized by system number or analyzer identification numbers.

(c) *Test data; pre-test.* (1) Date and time of day.

(2) Test number.

(3) Ambient temperature in dynamometer testing room (gasoline-fueled engines only).

(4) Barometric pressure, pre-test for gasoline-fueled engines, pre-test segment for Diesel engines.

(5) Engine intake humidity, pre-test for gasoline-fueled engines, pre-test segment for Diesel engines with non-conditioned air supply systems.

(6) Maximum observed torque for intermediate and rated speeds (Diesel engines only).

(7) Maximum observed torque at 2000 rpm (gasoline-fueled engines only).

(8) *Recorder chart or equivalent.* Identify for each test (test segment for Diesel engines) zero traces for each range used, and span traces for each range used.

(d) *Test data; modal.* (1) Recorder chart or equivalent. Identify for each test mode the emission concentration traces and the associated analyzer range(s). The start and finish of each test.

(2) Observed engine torque.

(3) Observed engine rpm.

(4) Record engine torque and engine rpm continuously with a chart recorder or equivalent recording device.

(5) Intake air flow and depression for each mode (Diesel engines only).

(6) Engine intake air temperature for each mode (Diesel engines only).

(7) *Fuel flow for each mode.* If the fuel flow measurement is a volume measurement system, record the fuel temperature in the measurement system for fuel density corrections to the mass flow rate. If the fuel temperature is within 3 °C (5.4 °F) of the calibration temperature, no density correction is required.

(8) Engine intake humidity (only for Diesel engines with humidity conditioned air supply).

(e) *Test data; post-test.* (1) Recorder chart or equivalent. Identify the hang-up check.

(2) *Recorder chart or equivalent.* Identify the zero traces for each range used and the span traces for each range used.

(3) Ambient temperature in the dynamometer testing room (gasoline-fueled engines only).

(4) Total number of hours of operation accumulated on the engine.

[42 FR 45154, Sept. 8, 1977, as amended at 46 FR 50495, Oct. 13, 1981; 47 FR 49807, Nov. 2, 1982]

§86.338–79 Exhaust measurement accuracy.

(a) The analyzers must be operated between 15 percent and 100 percent of full-scale chart deflection during the measurement of the emissions for each mode. The exceptions to the lower limit of this operating rule are:

(1) The analyzer's response may be less than 15 percent of full-scale if the full-scale value is 155 ppm (or ppm C) or less.

(2) *Option.* For CO analysis the analyzer's response may be less than 15 percent of full scale if the full-scale value is 5500 ppm or less.

(3) The analyzer's response may be less than 15 percent of full scale if the emissions from the engine are erratic and the average chart-deflection value is greater than 15 percent of full scale.

(4) For gasoline-fueled engines, the analyzer's response may be less than 15 percent of full scale during the initial part of the CT mode provided that average chart-deflection value is greater than 15 percent of full scale.

(5) The analyzer's response may be less than 15 percent of full scale if the contribution of all modes read below the 15 percent level is less than 10 percent by mass of the final test results.

(6) The HC analyzer's response may be less than 15 percent of full-scale when transient emissions (spikes) can be reasonably expected to exceed 90 percent of full-scale. Higher analyzer ranges may be used provided that the precision and linearity of the analyzer at the level of the readings below 15 percent meets the specifications of the range that would be required if the transient emissions did not exist.

(b) [Reserved]

(Secs. 206, 301(a), Clean Air Act as amended (42 U.S.C. 7525, 7601(a)))

[42 FR 45154, Sept. 8, 1977, as amended at 44 FR 16917, Mar. 20, 1979; 46 FR 50495, Oct. 13, 1981, and 47 FR 49807, Nov. 2, 1982]

§86.339–79 Pre-test procedures.

(a) Allow a minimum of 30 minutes warm-up in the stand-by or operating mode prior to spanning the analyzers.

(b) Replace or clean the filter elements and then vacuum leak check the system, §86.328(a). A pressure leak check is also permitted per §86.328(b). Allow the heated sample line, filters, and pumps to reach operating temperature.

(c) Perform the following system checks:

(1) If a stainless steel NO_2 to NO converter is used, prior to gasoline-fueled engine tests, purge the converter with air (zero-grade air, room air, or O_2) for a minimum of 30 minutes. The converter must be at operational temperature while purging.

(2) Check the sample-line temperature (see §86.310).

(3) Check the system response time (see §86.329). System response time may be applied from the most recent check of response time if all of the following are met:

(i) The flow rate for each flow meter is equal to or greater than the flow rate recorded in §86.329(b)(1)(ii).

(ii) For analyzers with capillaries, the response time from the sample/span valve is measured using in-use pressures and bypass flows (see §86.329(b)(2)).

(iii) The response time measured in step (ii) is equal to or less than the response time determined in §86.329(b)(2)(vii).

(4) A hang-up check is permitted.

(5) A converter-efficiency check is permitted. The check need not conform to §86.332(b). The test procedure may be aborted at this point in the procedure in order to repair the NO_2 to NO converter. If the test is aborted, the converter must pass the efficiency check described in §86.332(b) prior to starting the dynamometer test run.

(d) Introduce the zero-grade gases at the same flow rates and pressures used

to calibrate the analyzers and zero the analyzers on the lowest anticipated range that will be used during the test. Immediately prior to each test (segment, for Diesel engines), obtain a stable zero for each anticipated range that will be used during the test.

(e) Introduce span gases to the instruments under the same flow conditions as were used for the zero gases. Adjust the instrument gains on the lowest range that will be used to give the desired value. Span gases should have a concentration greater than 70 percent of full scale for each range used. Immediately prior to each test and also prior to each segment of the Diesel test, record the response to the span gas and the span-gas concentration for each range that will be used during the test.

(f) *Check the zero responses.* If they have changed more than 0.5 percent of full scale, repeat paragraphs (d) and (e) of this section.

(g) Check system flow rates and pressures. Note the values of gauges G3 and G4 for reference during the test.

§ 86.340–79 Gasoline-fueled engine dynamometer test run.

(a) This section applies to gasoline-fueled engines only. Diesel engines are covered in § 86.341.

(b)(1) Mount test engine on the engine dynamometer.

(2) Install instrumentation and sample probe.

(3) Read and record the general test data as specified in § 86.337(b).

(c) Precondition the engine by the following continuous steps:

(1) The engine shall be started and operated at:

(i) Zero load in accordance with the manufacturer's start-up and warm-up procedures for 1 minute ±30 sec;

(ii) A torque equivalent to 10±3 percent of the most recent determination of maximum torque for 4 minutes ±30 second at 2,000 rpm. This torque level may be exceeded if the choke and fast idle cam mechanism would normally result in a stabilized idle speed in excess of 2,000 rpm.

(iii) A torque equivalent to 55±5 percent of the most recent determination of maximum torque for 35 minutes ±1 minute at 2000 rpm;

(iv) *Option.* If the engine has been operating on service accumulation for a minimum of 40 minutes, the service accumulation may be substituted for steps (i) through (iii).

(2) If tested under the provisions of § 86.079–29, check specifications as required. This check must be performed within 20 minutes after completion of engine preconditioning;

(3) Determine the maximum torque of the engine at 2000 rpm ±100 rpm;

(i) Operate the engine with the throttle fully opened for a maximum of three minutes. During the second minute of operation, record the high and low torque readings. The average of these two readings will be the maximum torque value at 2000 rpm.

(ii) Calculate the torque corresponding to 10, 25, 55, and 90 percent of the observed maximum torque value.

(4) Determine the analyzer ranges required for each mode specified in § 86.335 to meet the range specifications of § 86.338. Prior to determining the range selection, the automatic dynamometer controller, if used, may be calibrated for the prevailing ambient conditions. The engine must not be operated for more than 30 minutes. Cycle 1, or cycles 1 and 2, specified in § 86.335, may be used for this purpose.

(5) The engine shall be turned off and allowed to stand for at least 1 hour, but not more than 2 hours, at an average ambient temperature of 25 °C±5 °C (77 °F±9 °F).

(d) The following steps shall be taken for each test:

(1) Maintain dynamometer test cell average ambient temperature at 25 °C±5 °C (77 °F±9 °F);

(2) Observe pre-test procedures; § 86.339;

(3) Start cooling system;

(4) Start engine and operate in accordance with manufacturer's start-up and warm-up procedures. The duration of the warm-up procedures shall be 5 minutes ±30 seconds. Sample flow may begin during the warm-up;

(5) Read and record all pre-test data specified in § 86.337(c) during the 5 minute warm-up;

(6) Release the choke idle-stop (if necessary) and return the engine throttle control to the curb-idle position, start sample flow and recorders if not

already started, and begin test sequence of §86.335;

(7) Should it be determined that the test must be rerun, then only the soak specified in paragraph (c)(5) of this section need be performed prior to paragraph (d) of this section;

(8) Perform the test cycle, §86.335, and continuously record exhaust gas concentrations;

(9) Read and record all modal data specified in §86.337(d) during the test cycle;

(10) The engine speed and load must be maintained within the requirements of §86.343;

(11) If at any time during a test, the test equipment malfunctions or the specifications in paragraph (d)(10) of this section are not met, the test is void, and may be aborted. The test sequence may be restarted under the provisions of paragraph (c)(5) of this section.

(e) *Exhaust gas measurements.* (1) Measure HC, CO, CO_2, and NO_X volume concentration in the exhaust sample. Should the analyzer response exceed 100 percent of full scale or respond less than 15 percent of the full scale, the next higher or lower analyzer range shall be used per §86.338. For exceptions to the lower limit see §86.338. Should the fuel flow instrument read below 20 percent of the full-scale value, a flow measurement unit with a lower scale must be used unless the option in §86.314 is desired.

(2) For each analyzer, each range that may be used during a test must have the zero and span responses recorded prior to the execution of that test. Only the range(s) used to measure the emissions during a test are required to have their zero and span recorded after the completion of the test.

(3) If during an emission test the value of gauges downstream of the NDIR analyzer(s) (G3 or G4) differs by more than ±2 inches of water from the pretest value, the test is void.

(Secs. 206, 301(a), Clean Air Act as amended (42 U.S.C. 7525, 7601(a)))

[42 FR 45154, Sept. 8, 1977, as amended at 44 FR 16917, Mar. 20, 1979; 46 FR 50496, Oct. 13, 1981; 47 FR 49807, 49813, Nov. 2, 1982]

§86.341–79 Diesel engine dynamometer test run.

(a) This section applies to Diesel engines only. Gasoline-fueled engines are covered in §86.340.

(b) The temperature of the air supplied to the engine shall be between 68 °F and 86 °F. The fuel temperature at the pump inlet shall be 100 °F±10 °F. The observed barometric pressure shall be between 28.5 inches and 31 inches Hg. Higher air temperature or lower barometric pressure may be used, if desired, but no allowance shall be made for increased emissions because of such conditions unless correction factors are developed and approved in advance by the Administrator.

(c) The governor and fuel system shall have been adjusted to provide engine performance at the levels in the application for certification required under §86.079–21. These adjustments are only permitted under the provisions of §86.079–25.

(d) The following steps shall be taken for each test:

(1) Install instrumentation and sample probes as required;

(2) Observe pre-test procedure, §86.339;

(3) Read and record the general test data as specified in §86.337(b);

(4) Start cooling system;

(5) Precondition the engine in the following manner:

(i) Operate the engine at idle for 2 to 3 minutes;

(ii) Operate the engine at approximately 50 percent power at the peak torque speed for 5 to 7 minutes;

(iii) Operate the engine at rated speed and maximum horsepower for 25 to 30 minutes;

(iv) *Option.* It is permitted to precondition the engine at rated speed and maximum horsepower until the oil and water temperatures are stabilized. The temperatures are defined as stabilized if they are maintained within 2 percent of point for 2 minutes. The engine must be operated a minimum of 10 minutes for this option. This optional procedure may be substituted for step (iii);

(v) *Option.* If the engine has been operating on service accumulation for a minimum of 40 minutes, the service accumulation may be substituted for steps (i) through (iii);

(vi) Longer preconditioning times may be used only if prior approval is obtained from the Administrator.

(6) Within a total elapsed time of 10 minutes or less, determine by experimentation the maximum torque at the rated and intermediate speeds;

(7) Calculate the torque corresponding to 2, 25, 50, 75, and 100 percent of the maximum observed torque for the rated and intermediate speeds;

(8) Read and record all pre-test data specified in § 86.337(c);

(9) Start the test cycle, § 86.336, within 10 minutes, after determining test load using the torque values determined in paragraph (d)(6) of this section;

(10) Read and record all modal data specified in § 86.337(d) during the last 2 minutes of each mode;

(11) Continuously record the analyzer's response to the exhaust gas during each test segment;

(12) Test segments may be repeated;

(13) If a delay of more than 20 minutes occurs between the end of one segment and the beginning of another segment the test is void. The test may be restarted at paragraph (d)(8) of this section. If the delay exceeds 4 hours, the test shall be restarted at paragraph (d)(2) of this section;

(14) The engine speed and load must be maintained within the requirements of § 86.336 during the last 2 minutes of each mode. If the requirement is not met for all modes during a test segment, that segment of the test is void. The test segment may be restarted beginning with paragraph (d)(8) of this section;

(15) If at any time during a test segment, the test equipment malfunctions or the specifications in paragraph (d)(14) of this section are not met, the test segment is void, and may be aborted. The test segment may be restarted beginning with paragraph (d)(8) of this section;

(16) Fuel flow and air flow during the idle or 2-percent load conditions may be determined just prior to or immediately following the dynamometer sequence, if longer times are required for accurate measurements.

(e) *Exhaust gas measurements.* (1) Measure HC, CO, CO_2, and NO_X volume concentration in the exhaust sample. Should the analyzer response exceed 100 percent of full scale or respond less than 15 percent of full scale, the next higher or lower analyzer range shall be used per § 86.338. For exceptions to the lower limit see § 86.338. Should the fuel flow instrument read below 20 percent of full-scale value, a smaller flow measurement unit must be used unless the option in § 86.314 is desired.

(2) Each analyzer range that may be used during a test segment must have the zero and span responses recorded prior to the execution of that test segment. Only the range(s) used to measure the emissions during a test segment are required to have their zero and span recorded after the completion of the test segment.

(3) It is permitted to change filter elements between test segments.

(4) A leak check is permitted between test segments.

(5) A hang-up check is permitted between test segments.

(6) If, during the emission measurement portion of a test segment, the value of the gauges downstream of the NDIR analyzer(s) G3 or G4 differs by more than ±2 inches of water from the pretest value, the test segment is void.

[42 FR 45154, Sept. 8, 1977, as amended at 46 FR 50496, Oct. 13, 1981, and 47 FR 49807, Nov. 2, 1982]

§ 86.342–79 Post-test procedures.

(a) Begin a hang-up check within 30 seconds of the completion of the last mode in the test. Use the following procedure:

(1) Introduce a zero-grade gas or room air into the sample probe or valve V2 to check the ''hangup zero'' response. Simultaneously start a time measurement.

(2) Select the lowest HC range used during the test;

(3) The difference between the span-zero response and the hang-up zero response shall not be greater than 5.0 percent of full scale or 10 ppmC whichever is greater, within:

(i) 50 seconds for gasoline-fueled engine test, or

(ii) 4 minutes for Diesel engine tests, or

(b) Begin the analyzer span checks within 6 minutes after the completion of the last mode in the test. Record for

each analyzer the zero and span response for each range used during the preceding test or test segment.

(c) If during the test, the filter element(s) were replaced or cleaned, a vacuum check must be performed per §86.328 immediately after the span checks. If the vacuum side leak check does not meet the requirements of §86.328 the test is void.

(d) Read and record the post-test data specified in §86.337(e).

(e) For a valid test, the analyzer drift between the before-test and after-test (before-segment and after-segment for Diesels) span checks for each analyzer must meet the following requirements:

(1) The span drift (defined as the change in the difference between the zero response and the span response) must not exceed 2.0 percent of full-scale chart deflection for each range used;

(2) The zero response drift must not exceed 2.0 percent of full-scale chart deflection for each range used above 155 ppm (or ppm C), or 3 percent of full-scale chart deflection for each range below 155 ppm (or ppm C).

(Secs. 206, 301(a), Clean Air Act as amended (42 U.S.C. 7525, 7601(a)))

[42 FR 45154, Sept. 8, 1977, as amended at 44 FR 16917, Mar. 20, 1979; 46 FR 50496, Oct. 13, 1981; 47 FR 49807, Nov. 2, 1982]

§86.343–79 Chart reading.

(a) A computer or any other automatic data processing device(s) may be used as long as the system meets the requirements of this subpart.

(b) Determine the location on the chart of the analyzer responses corresponding to the end of each mode.

(c) For gasoline-fueled engines, determine whether the test cycle was run in accordance with §86.335 by observing either chart event marks, speed trace, torque trace, or concentration traces. The test will be invalidated if there is a deviation of more than:

(1) 2 seconds from the specified time for each CT mode, and 4 seconds for all other modes; or,

(2) Two percent of maximum torque during the exhaust gas sampling period (last 10 seconds on each nonclosed throttle gasoline-fueled engine mode); or

(3) 5 percent of maximum torque during the remainder of the mode, excluding the first 35 seconds of the mode; or

(4) 200 rpm during the first 10 seconds of each mode, or 100 rpm during the remainder of each mode.

(d) Determine chart deflections.

(1) Locate the last 10 seconds of each gasoline-fueled engine mode except CT. Locate the last 50 seconds of each gasoline-fueled engine CT mode. For all Diesel engine modes locate the last 60 seconds.

(2)(i) Divide the last 10 seconds or 60 seconds, whichever is applicable, into a minimum of 10 equally spaced increments. Determine the chart deflection of each increment for the CO_2, CO, HC, and NO_X analyzers.

(ii) Option for Diesel engine modes. If the deviation from a straight line (other than instrument noise) during this 60 seconds is less than ±5 percent of full-scale, the average chart deflection may be determined by eye. The average value (one number) may then be used in lieu of the 10 values required by paragraph (d)(2)(i) of this section.

(3) Other methods of determining the chart deflection of the analyzers may be used only with prior approval by the Administrator.

(e) Determine CO_2, CO, HC, and NO_X concentrations for each mode.

(1) If the option in paragraph (d)(2)(ii) of this section is employed, then those chart deflections for both linear and non-linear analyzers may be substituted for the average chart deflection in step (e)(2).

(2) For linear instruments, average the chart deflections determined in paragraph (d)(2)(i) of this section. Determine the concentration for this average chart deflection using calibration data.

(3) For non-linear instruments, calculate concentrations for each chart deflection determined in paragraph (d)(2)(i) of this section. Take the average of these concentrations for each mode.

(4) For purposes of this paragraph, calibration data includes calibration curves, linearity curves, span-gas responses, and zero-gas responses.

[42 FR 45154, Sept. 8, 1977, as amended at 47 FR 49813, Nov. 2, 1982]

§ 86.344–79 Humidity calculations.

(a) The following abbreviations (and units) are used in this section:

$BARO$ = barometric pressure (Pa)
H = specific humidity, (gm H_2O/gm of dry air)
K = 0.6220 gm H_2O/gm dry air
M_{air} = Molecular weight of air = 28.9645
M_{H2O} = Molecular weight of water = 18.01534
P_{DB} = Saturation vapor pressure of water at the dry bulb temperature (Pa)
P_{DP} = saturation vapor pressure of water at the dewpoint temperature (Pa)
P_v = partial pressure of water vapor (Pa)
P_{WB} = saturation vapor pressure of water at the wet bulb temperature (pa)
T_{DB} = Dry bulb temperature (°K)
T_{WB} = Wet bulb temperature (°K)
Y = Water-vapor volume concentration

(b) The specific humidity on a dry basis of the intake air (H) is defined by equation (1).

$$H = \frac{(K)\,(P_v)}{BARO - P_v} \qquad (1)$$

(c) The partial pressure of water vapor may be determined in two manners:

(1) A dew point device may be used. In that case:

$P_v = P_{DP}$

(2) A wet-bulb, dry-bulb method may be used. In that case ''Ferrels equation'' (eq. (2)) is used.

$$P_v = P_{WB} - 0.000660\,(T_{DB} - T_{WB})BARO[1 + 0.00115(T_{WB} - 273.15)] \qquad (2)$$

(d)(1) The saturation vapor pressure (P_{WB}) of water at the wet-bulb temperature is defined by equation (3) (Ref. Wexler and Greenspan, equation (23), National Bureau of Standards).

$$P_{WB} = \exp\left[B \text{ in } T_{WB} + \sum_{i=0}^{9} F_i T_{WB}^{i-2}\right] \qquad (3)$$

where:
P_{WB} is in Pascals (Pa)
T_{WB} = Web-bulb temperature (°K)
$B = -12.150799$
$F_0 = -8.49922(10)^3$
$F_1 = -7.4231865(10)^3$
$F_2 = 96.1635147$
$F_3 = 2.4917646(10)^{-2}$
$F_4 = -1.3160119(10)^{-5}$
$F_5 = -1.1460454(10)^{-8}$
$F_6 = 2.1701289(10)^{-11}$
$F_7 = -3.610258(10)^{-15}$
$F_8 = 3.8504519(10)^{-18}$
$F_9 = -1.4317(10)^{-21}$

(2) The table in Figure D79–5 may be used in lieu of equation (3).

(e) The saturated vapor pressure of water at the dry-bulb temperature (P_{DB}) is found (if required) by using dry-bulb absolute temperature (°K) in equation (3).

(f) The percent of relative humidity (RH) (if required) is defined by equation (4).

$$RH = \frac{P_n}{P_{DB}}(100) \qquad (4)$$

(g) The water-vapor volume concentration on a dry basis of the engine intake air (Y) is defined by equation (5).

$$Y = \frac{(H)(M_{air})}{(M_{H2O})} - \frac{P_v}{BARO - P_v} \qquad (5)$$

FIGURE D79–5—SATURATION VAPOR PRESSURE OVER WATER (PASCALS)

Temperature °C	0.0	0.1	0.2	0.3	0.4	0.5	0.6	0.7	0.8	0.9
0	610.752	615.207	619.690	624.203	628.744	633.315	637.916	642.545	647.205	651.894
1	656.614	661.364	666.144	670.955	675.796	680.669	685.572	690.507	695.473	700.471
2	705.500	710.562	715.655	720.781	725.939	731.130	736.354	741.611	746.901	752.224
3	757.581	762.971	768.396	773.854	779.347	784.874	790.436	796.033	801.664	807.331
4	813.034	818.771	824.545	830.355	836.200	842.082	848.001	853.956	859.948	865.978
5	872.045	878.149	884.291	890.470	896.688	902.945	909.239	915.573	921.945	928.357
6	934.808	941.298	947.828	954.399	961.009	967.660	974.351	981.083	987.856	994.670
7	1001.53	1008.42	1015.36	1022.34	1029.37	1036.43	1043.54	1050.70	1057.89	1065.13
8	1072.41	1079.74	1087.11	1094.52	1101.98	1109.48	1117.03	1124.63	1132.27	1139.95
9	1147.68	1155.46	1163.28	1171.15	1179.07	1187.04	1195.05	1203.11	1211.21	1219.37
10	1227.57	1235.83	1244.13	1252.48	1260.88	1269.32	1277.82	1286.37	1294.97	1303.62
11	1312.32	1321.07	1329.87	1338.73	1347.63	1356.59	1365.60	1374.67	1383.78	1392.95

FIGURE D79–5—SATURATION VAPOR PRESSURE OVER WATER (PASCALS)—Continued

Temperature °C	0.0	0.1	0.2	0.3	0.4	0.5	0.6	0.7	0.8	0.9
12	1402.17	1411.45	1420.78	1430.16	1439.60	1449.10	1458.64	1468.25	1477.91	1487.62
13	1497.39	1507.22	1517.11	1527.05	1537.04	1547.10	1557.21	1567.39	1577.62	1587.90
14	1598.25	1608.66	1619.12	1629.65	1640.24	1650.88	1661.59	1672.36	1683.18	1694.08
15	1705.03	1716.04	1727.12	1738.26	1749.46	1760.73	1772.06	1783.45	1794.91	1806.43
16	1818.01	1829.67	1841.38	1853.17	1865.02	1876.93	1888.91	1900.96	1913.08	1925.27
17	1937.52	1949.84	1962.23	1974.69	1987.21	1999.81	2012.48	2025.21	2038.02	2050.90
18	2063.85	2076.87	2089.97	2103.13	2116.37	2129.68	2143.07	2156.53	2170.06	2183.66
19	2197.34	2211.10	2224.93	2238.84	2252.82	2266.88	2281.02	2295.23	2309.52	2323.89
20	2338.34	2352.86	2367.47	2382.15	2396.91	2411.76	2426.68	2441.68	2456.77	2471.93
21	2487.18	2502.51	2517.93	2533.42	2549.00	2564.66	2580.41	2596.24	2612.16	2628.16
22	2644.25	2660.42	2676.68	2693.02	2709.46	2725.98	2742.59	2759.28	2776.07	2792.94
23	2809.91	2826.96	2844.11	2861.34	2878.67	2896.09	2913.60	2931.20	2948.89	2966.68
24	2984.56	3002.54	3020.61	3038.77	3057.03	3075.39	3093.84	3112.39	3131.03	3149.78
25	3168.62	3187.55	3206.59	3225.73	3244.96	3264.30	3283.73	3303.27	3322.91	3242.65
26	3362.49	3382.43	3402.48	3422.63	3442.89	3463.24	3483.71	3504.28	3524.95	3545.73
27	3566.62	3587.62	3608.72	3629.93	3651.25	3672.67	3694.21	3715.86	3737.61	3759.48
28	3781.46	3803.55	3825.75	3848.07	3870.50	3893.04	3915.70	3938.47	3961.36	3984.36
29	4007.48	4030.71	4054.06	4077.53	4101.12	4124.83	4148.65	4172.59	4196.66	4220.84
30	4245.15	4269.58	4294.13	4318.80	4343.60	4368.52	4393.56	4418.73	4444.02	4469.44

§ 86.345–79 Emission calculations.

(a) The following abbreviations (and units) are used in this section.

α = atomic hydrogen/carbon ratio of the fuel

ϕ = dry fuel-air ratio (measured)/fuel-air ratio (stoichiometric)

BARO = Barometric pressure (in. *H* g*A*)

BHP = Brake horsepower

BSCO = Brake specific carbon monoxide emissions, (gm/*BHP-HR)*

BSFC = Brake specific fuel consumption (lb/*BHP-HR*)

BSHC = Brake specific hydrocarbon emissions (gm/*BHP-HR*)

$BSNO_X$ = Brake specific oxides of nitrogen emissions (gm/*BHP-HR*)

DCO = CO volume concentration in exhaust, ppm (dry)

DCO_2 = CO_2 volume concentration in exhaust, percent (dry)

DHC = HC volume carbon concentration in exhaust, ppmC (dry)

DKNO = NO volume concentration in exhaust, in ppm (dry and humidity corrected)

EIP = engine intake pressure (in. *H* g*A*) = *BARO* − inlet depression

f/a = measured dry fuel-air ratio

G = humidity of the inlet air in grains of water per pound of dry air = (453.59/0.0648) *H*, (see § 86.344)

K = water − gas equilibrium constant = 3.5

K_{NOx} = Humidity correction factor for oxides of nitrogen

K_w = Wet to dry correction factor

M_C = Atomic weight of carbon

$(M_C + M_H)$ = mean molecular weight of the fuel per carbon atom

M_{CO} = Molecular weight of CO

M_F = Mass flow-rate of fuel used in the engine in lb/hr = W_f/453.59

M_H = Atomic weight of hydrogen

M_{NO2} = Molecular weight of nitrogen dioxide (NO_2)

T = Temperature of inlet air (°F)

W_{CO} = Mass rate of CO in exhaust, grams/hr

W_f = Mass flow-rate of fuel used in the engine, in grams/hr = (453.59) x (W_f lbs/hr)

WHC = HC volume concentration in exhaust, ppm *C*(wet)

W_{HC} = Mass rate of HC in exhaust, grams/hr

W_{NOx} = Mass rate of NO_X in exhaust, grams/hr

Y = H_2O volume concentration of intake air (See § 86.344)

(b) Determine the exhaust species volume concentration for each mode.

(c)(1) Convert wet basis measurements to a dry basis by the following:

Dry concentrations = $1/K_W$ x wet concentrations. K^W is defined by the equation in Figure D79–6.

(2) For Diesel engines, for each mode use the measured engine (*f/a*) entering the combustion chamber when calculating ϕ. If applicable bleed air, etc. must be subtracted from the measured air flow (see § 86.313).

(3) For gasoline-fueled engines, optional for Diesel engines, calculate ϕ for each mode by substituting *WHC* for *DHC* in the (*f/a*) equations in paragraph (d) of this section.

(4) Calculate a *Y* value for each gasoline-fueled engine test from the pretest data. Apply the *Y* value to the K_W equation for the entire test.

(5) Calculate a separate *Y* value for each Diesel test segment from the pretest-segment data. Apply the *Y* value to the K_W equation for the entire test-segment.

$$K_W = \frac{1}{1+\left[\dfrac{\alpha\left(\dfrac{DCO_2}{10^2}+\dfrac{DCO}{10^6}\right)+\dfrac{2Y}{\phi}\left(\dfrac{DCO_2}{10^2}+\dfrac{DCO}{10^6}+\dfrac{WHC}{10^6}\right)\left(1+\dfrac{\alpha}{4}\right)}{2\left(1+\dfrac{\dfrac{DCO}{10^6}}{\left(\dfrac{DCO_2}{10^2}\right)K}\right)}\right]}$$

Figure D79–6. K_w—Wet To Dry Correction Factor.

(d) Compute the dry (*f/a*) if required as follows:

$$(f/a) = \frac{4.77(1+\alpha/4)(f/a)\,\text{stoich}}{\dfrac{1}{\overline{X}}-\left(\dfrac{DCO}{2\overline{X}(10)^6}\right)-\left(\dfrac{DHC}{\overline{X}10^6}\right)+\dfrac{\alpha}{4}\left(1-\dfrac{DCO}{\overline{X}(10)^6}\right)-\dfrac{.75\alpha}{\dfrac{K}{\dfrac{DCO}{\overline{X}(10)^6}}+\left(\dfrac{(1-K)}{1-\dfrac{DHC}{\overline{X}(10)^6}}\right)}}$$

Where

$$(f/a)\text{stoich} = \frac{M_C+\alpha M_H}{138.18(1+\alpha/4)}$$

$$\overline{X} = DCO_2/10^2 + DCO/10^6 + DHC/10^6$$

(e) *Data validation*—(1) *Diesel engines only*. Compare the calculated dry (*f/a*) with the measured fuel and air flow. For a valid test the emission calculated (*f/a*) must agree within 10 percent of the measured (*f/a*) for each mode. Diesel engine idle and 2 percent modes do not have to meet this requirement.

(2) *Fuel/Air ratio comparison*. When comparing measured (*f/a*) ratio to an emissions calculated (*f/a*) ratio, the measured air flow (in terms of mass) is the total mass of air entering the exhaust pipe. This may include additions of air mass to the exhaust pipe by an air injection system.

(3) Other methods of data validation may be used if prior approval is obtained from the Administrator.

(4) Data validation techniques that have obtained prior approval from the Administrator for use on gasoline-fueled engines may be used to determine void tests.

(f) Multiply the dry nitric oxide volume concentrations by the following humidity correction factor to obtain *DKNO:*

(1) Gasoline-fueled engines:

$K_{NOx} = 0.6272 + 0.00629G - 0.0000176G^2$

(2) Diesel engines:

$$K_{NOx} = \frac{1}{1+A(G-75)+B(T-85)}$$

where:

$A = 0.044\,(f/a) - 0.0038$

$B = -0.116(f/a) + 0.0053$

T = Temperature of inlet air, °F.

(g) Calculate the mass emissions of each species in grams per hour for each mode as follows:

$$\text{(1)} \qquad \text{HC grams/hr} = W_{\text{HC}} = \frac{(DHC/10^4)W_f}{(DCO/10^4) + DCO_2 + (DHC/10^4)}$$

$$\text{(2)} \qquad \text{CO grams/hr} = W_{\text{CO}} = \frac{M_{\text{CO}}(DCO/10^4)W_f}{(M_C +_\alpha M_H)[(DCO/10^4) + DCO_2 + (DHC/10^4)]}$$

$$\text{(3)} \qquad \text{NO}_x \text{ grams/hr} = W_{\text{NO}x} = \frac{M_{NO2}(DKNO/10^4)W_f}{(M_C +_\alpha M_H[(DCO/10^4) + DCO_2 + (DHC/10^4)]}$$

(h)(1) For gasoline-fueled engines, weight the mass values of *BHIP*, W_{HC}, W_{CO}, *Mf*, and W_{NO_x} for each mode by multiplying the modal mass values by the appropriate modal weighting factor prescribed by § 86.335.

(2) For Diesel engines, weight the values of *BHP*, W_{HC}, W_{CO}, W_{NO_x}, and *Mf* as follows:

(i) Weight the values from each idle mode by multiplying the values by (0.067);

(ii) Weight the remaining modes by multiplying the values by 0.08.

(i) Calculate the brake specific emissions for:

(1) Each gasoline-fueled engine test cycle, and

(2) Each Diesel engine test by summing the weighted values (*BHP*, W_{HC}, W_{CO}, and W_{NO_x}) from each mode as follows:

$$BSHC(t) = \frac{\sum \text{weighted } W_{\text{HC}}}{\sum \text{weighted } BHP}$$

$$BSCO(t) = \frac{\sum \text{weighted } W_{\text{CO}}}{\sum \text{weighted } BHP}$$

$$BSNO_x(t) = \frac{\sum \text{weighted } W_{\text{NO}_x}}{\sum \text{weighted } BHP}$$

(*t*) = Test cycle number (*t* = 1, 2) (gasoline-fueled engines only).

(j)(1) Calculate the brake-specific fuel consumption (*BSFC*) from the non-weighted *BHP* and *Mf* for each mode. Gasoline-fueled engine idle and *CT* modes, and Diesel idle modes are excluded.

(2) For gasoline-fuel engines use:

$$BSFC = \frac{M_f}{BHP}$$

(3) For Diesel engines use:

$$CBSFC = \frac{M_f}{CBHP}$$

where:

$$CBHP = BHP\left[\frac{29.00}{EIP}\right]\left[\frac{T + 459.69}{85 + 459.69}\right]^{0.7}$$

(4) Other methods of correcting power to determine *BSFC* may be used only with prior approval of the Administrator.

(k) Calculate the weighted brake-specific fuel consumption (*WBSFC*) for

(1) Each gasoline engine test cycle by:

$$WBSFC(t) = \frac{\sum \text{weighted } M_f}{\sum \text{weighted } BHP}$$

where:

t = Test cycle number (*t* = 1,2)

(2) Each Diesel engine test by:

$$WCBSFC = \frac{\sum \text{weighted } M_f}{\sum \text{weighted } CBHP}$$

(l) For gasoline-fueled engines, calculate the brake-specific emissions and fuel consumption for the complete test as follows:

$$BSHC(T) = 0.35\ BSHC(1) + 0.65\ BSHC(2)$$
$$BSCO(T) = 0.35\ BSCO(1) + 0.65\ BSCO(2)$$
$$BSNO_x(T) = 0.35\ BSNO_x(1) + 0.65\ BSNO_x(2)$$
$$WBSFC(T) = 0.35\ WBSFC(1) + 0.65\ WBSFC(2)$$

§ 86.346–79 Alternative NO_X measurement technique.

(a) Oxides of nitrogen (NO_X) may be measured with the following ''alternative instrumentation'' for both Diesel and gasoline-fueled engines. The ''alternative instrumentation'' shall consist of:

(1) A heated sample line maintained above the dew point:

(2) An NO_2 to NO converter obtaining a sample directly from the heated sample line; and

(3) A combination per 40 CFR 86.777 or 40 CFR 86.977, whichever is applicable of a water trap, dryer, flow controls, and an NO NDIR analyzer obtaining a sample from the converter.

(b) The provisions of 40 CFR 86 subpart D shall apply to the ''alternative instrumentation'', where applicable, with the following exceptions:

(1) Analyzer specifications found in §§ 86.315, 86.321, and 86.322 do not apply to the ''alternative instrumentation''.

(2) For the purposes of this section, the full-scale value specified in § 86.338 (a)(1) shall be 1,500 ppm for Diesel engines and 2,500 ppm for gasoline-fueled engines.

(c) The ''alternative instrumentation'' shall be calibrated per § 86.330.

(d) The NO NDIR analyzer shall meet the performance and interference specifications contained in 40 CFR 86.777 or 40 CFR 86.977, whichever is applicable.

(e) The operation of the dryer shall follow good engineering practice such that the test results are not altered. Proper preconditioning of the dryer is allowed.

§ 86.347–79 Alternative calculations for diesel engines.

(a) *This section applies to Diesel engines only*. Gasoline-fueled engines must use the calculations in § 86.345.

(b) For Diesel engines, the calculations specified in 40 CFR 86.977–15 may be substituted for § 86.345.

(c) The modal *BSFC* and weighted *BSFC* shall be calculated per § 86.345.

(d) If the provisions of this section are used, a CO_2 measurement is not required.

(e) Both 40 CFR 86.977–15(a) and § 86.313 shall apply to air-flow measurements. For the purposes of this section, the air-flow measurement accuracy specified in § 86.313 shall be ±1 percent.

§ 86.348–79 Alternative to fuel H/C analysis.

(a) Fuel H/C analysis need not be performed if the following average H/C ratios are used for all calculations.

(1) #1B1 Diesel: 1:93

(2) #1B2 Diesel: 1:80

(3) Gasoline: 1.85

(b) [Reserved]

[46 FR 50496, Oct. 13, 1981, and 47 FR 49807, Nov. 2, 1982]

Subpart E—Emission Regulations for 1978 and Later New Motorcycles, General Provisions

SOURCE: 42 FR 1126, Jan. 5, 1977, unless otherwise noted.

§ 86.401–90 General applicability.

(a) This subpart applies to 1978 and later model year, new, gasoline-fueled motorcycles built after December 31, 1977, and to 1990 and later model year, new, methanol-fueled motorcycles built after December 31, 1989.

(b) Motorcycles with engine displacements less than 50 cc (3.1 cu in) are excluded from the requirements of this subpart.

(c) Motorcycles are excluded from the requirements of this subpart, if with an 80 kg (176 lb) driver, it cannot:

(1) Start from a dead stop using only the engine, or

(2) Exceed a maximum speed of 40 km/h (25 mph) on level paved surfaces.

[54 FR 14539, Apr. 11, 1989]

§ 86.401–97 General applicability.

(a) This subpart applies to 1978 and later model year, new, gasoline-fueled motorcycles built after 31 December, 1977, and to 1990 and later model year, new, methanol-fueled motorcycles built after 31 December, 1989 and to 1997 and later model year, new, natural

gas-fueled and liquefied petroleum gas-fueled motorcycles built after 31 December, 1996.

(b) Motorcycles with engine displacements less than 50 cc (3.1 cu in) are excluded from the requirements of this subpart.

(c) Motorcycles are excluded from the requirements of this subpart, if with an 80 kg (176 lb) driver, it cannot:

(1) Start from a dead stop using only the engine; or

(2) Exceed a maximum speed of 40 km/h (25 mph) on level paved surfaces.

[59 FR 48512, Sept. 21, 1994]

§86.402–78 Definitions.

(a) The definitions in this section apply to this subpart and also to subpart F.

Act means part A of title II of the Clean Air Act, 42 U.S.C. 1857 f–1 through f–7, as amended by Pub. L. 91–604.

Administrator means the Administrator of the Environmental Protection Agency or his authorized representative.

Class, see §86.419.

Crankcase emissions means airborne substances emitted to the atmosphere from any portion of the engine crankcase ventilation or lubrication systems.

Curb mass means the actual or manufacturer's estimated mass of the vehicle with fluids at nominal capacity and with all equipment specified by the Administrator.

Displacement, and *Displacement Class*, see §86.419.

Engine family means the basic classification unit of a manufacturer's product line used for the purpose of test fleet selection and determined in accordance with §86.420.

Engine-displacement-system combination means an engine family-displacement-emission control system combination.

EPA Enforcement Officer means any officer or employee of the Environmental Protection Agency so designated in writing by the Administrator (or by his designee).

Exhaust emissions means substances emitted to the atmosphere from any opening downstream from the exhaust port of a motor vehicle engine.

Fuel system means the combination of fuel tank, fuel pump, fuel lines, oil injection metering system, and carburetor or fuel injection components, and includes all fuel system vents.

Loaded vehicle mass means curb mass plus 80 kg (176 lb.), average driver mass.

Model year means the manufacturer's annual production period (as determined by the Administrator) which includes January first of such calendar year. If the manufacturer has no annual production period, the term *model year* shall mean the calendar year.

Motorcycle means any motor vehicle with a headlight, taillight, and stoplight and having: Two wheels, or Three wheels and a curb mass less than or equal to 680 kilograms (1499 pounds).

Oxides of nitrogen means the sum of the nitric oxide and nitrogen dioxide contained in a gas sample as if the nitric oxide were in the form of nitrogen dioxide.

Scheduled maintenance means any adjustment, repair, removal, disassembly, cleaning, or replacement of vehicle components or systems which is performed on a periodic basis to prevent part failure or vehicle malfunction, or anticipated as necessary to correct an overt indication of vehicle malfunction or failure for which periodic maintenance is not appropriate.

Span gas means a gas of known concentration which is used routinely to set the output level of any analyzer.

System includes any motor vehicle modification which controls or causes the reduction of substances emitted from motor vehicles.

Total test distance is defined for each class of motorcycles in §86.427–78.

Useful life is defined for each class (see §86.419) of motorcycle:

Class I—5.0 years or 12,000 km (7,456 miles), whichever first occurs.

Class II—5.0 years or 18,000 km (11,185 miles), whichever first occurs.

Class III—5.0 years or 30,000 km (18,641 miles), whichever first occurs.

Unscheduled maintenance means any inspection, adjustment, repair, removal, disassembly, cleaning, or replacement of vehicle components or systems which is performed to correct or diagnose a part failure or vehicle

malfunction which was not anticipated.

Zero kilometers means that point after normal assembly line operations and adjustments, after normal dealer setup and preride inspection operations have been completed, and before 100 kilometers of vehicle operation of three hours of engine operation have been accumulated, including emission testing if performed.

(b) [Reserved]

[42 FR 1126, Jan. 5, 1977, as amended at 42 FR 56737, Oct. 28, 1977; 49 FR 48138, Dec. 10, 1984]

§ 86.402–98 Definitions.

The definitions of § 86.402–78 apply to this subpart. The following definition in this section is applicable beginning with the 1998 model year:

Motorcycle means any motor vehicle with a headlight, taillight, and stoplight and having: Two wheels, or Three wheels and a curb mass less than or equal to 793 kilograms (1749 pounds).

[63 FR 11849, Mar. 11, 1998]

§ 86.403–78 Abbreviations.

The abbreviations used in this subpart have the following meanings in both capital and lowercase:

ASTM—American Society for Testing and Materials.
C—Celsius.
cc—Cubic centimetre(s).
cfh—Cubic feet per hour.
cfm—Cubic feet per minute.
cm—Centimetre(s).
CO—Carbon monoxide.
CO_2—Carbon dioxide.
Conc—Concentration.
cu.—Cubic.
CVS—Constant volume sampler.
EGR—Exhaust gas recirculation.
EP—End point.
EPA—Environmental Protection Agency.
F—Fahrenheit.
h—hour.
HC—Hydrocarbon(s).
Hg—Mercury.
H_2O—Water.
in.—Inch(es).
K—Kelvin.
kg—Kilogram(s).
km—Kilometre(s).
kpa—Kilopascals.
lb—Pound(s).
m—Metre(s).
mph—Miles per hour.
mm—Millimetre(s).
N_2—Nitrogen.
NO_X—Oxides of nitrogen.
No.—Number.
O_2—Oxygen.
Pa—Pascal(s).
Pb—lead.
ppm—Parts per million by volume.
psi—Pounds per square inch.
psig—Pounds per square inch gauge.
R—Rankine.
rpm—Revolutions per minute.
wt—Weight.
°—Degree(s).
%—Percent.

§ 86.404–78 Section numbering.

(a) The year of initial applicability of a section is indicated by its section number. The two digits following the hyphen designate the first model year for which a section is effective. A section remains effective until superseded.

Example: Section 86.411–78 applies to 1978 and subsequent model years until it is superseded. If a § 86.411–81 is promulgated it would take effect beginning with 1981; § 86.411–78 would apply to years 1978 through 1980.

(b) A reference to a section without a year designation implies the appropriate model year.

Example: When considering 1979 vehicles a reference to § 86.411 implies § 86.411–79. However if no § 86.411–79 has been promulgated then § 86.411–78 is implied; See paragraph (a) of this section.

§ 86.405–78 Measurement system.

(a) This subpart and subpart F have been written using System International (SI) units. SI units will be used to determine compliance with these regulations. English equivalents have been indicated solely for the user's convenience.

(b) [Reserved]

§ 86.406–78 Introduction, structure of subpart, further information.

(a) This subpart contains general provisions regulating the emission of air pollution from new motorcycles. Test procedures are found in subpart F.

(b) Several discrete concepts are addressed:

(1) *Requirements.* Sections 86.407 to 86.415.

(2) *Application for certification.* Sections 86.416 and 86.417.

(3) *Test fleet selection.* Sections 86.418 to 86.423.

(4) *Service accumulation, testing, maintenance, certification.* Sections 86.424 to 86.439.

(5) *Administrative provisions.* Sections 86.440 to 86.444.

(c) The certification procedure to be followed depends upon the manufacturer's projected sales.

(1) New motorcycles, produced by a manufacturer whose projected U.S. sales of motorcycles is 10,000 or more units (for the model year in which certification is sought) shall demonstrate compliance with all general standards and all specific emission requirements before they can be sold in the United States. The manufacturer is required to submit an application with sales data, product information, required maintenance, testing and service accumulation procedures. The Administrator will select vehicle(s) which will represent the manufacturer's product line. The manufacturer is required to construct these vehicles to be representative of actual production. Service is accumulated and emission tests performed with data submitted to the Administrator. The Administrator may run his own tests to confirm the manufacturer's results. The Administrator will review the data and either grant or deny certification. If the manufacturer wishes to make changes to a certified vehicle, or to produce a new vehicle, the Administrator must be notified. The Administrator may require testing to demonstrate continued compliance with emission standards. Each vehicle must be labeled with tune up specifications and the purchaser must be supplied with maintenance instructions. Also, information on production vehicles must be supplied to the Administrator.

(2) New motorcycles produced by a manufacturer whose projected U.S. sales of motorcycles is less than 10,000 units (for the model year in which certification is sought) shall meet both the general standards and specific emission requirements described in §§86.401 through 86.417, §86.425, §86.437, and §§86.440 through 86.444 of this subpart before they can be sold in the United States. The manufacturer is required to submit an application containing a statement that his vehicles conform to the applicable emission standards. The manufacturer is required to retain in his records, but not submit with the application, valid emission test data which support his statement. The Administrator will review the application and either grant or deny certification. Each vehicle must be labeled with tune up specifications and the purchaser must be supplied with maintenance instructions. Also, information on production vehicles must be supplied to the Administrator.

(d) Manufacturers who are considering an application should contact: Director, Vehicle Programs and Compliance Division, Environmental Protection Agency, 2565 Plymouth Rd., Ann Arbor, Michigan 48105 and state whether he/she plans to certify for total sales of greater than or less than 10,000 vehicles for the applicable model year.

[42 FR 1126, Jan. 5, 1977, as amended at 63 FR 11849, Mar. 11, 1998]

§86.407–78 Certificate of conformity required.

Every new motorcycle manufactured for sale, sold, offered for sale, introduced or delivered for introduction into commerce, or imported into the United States which is subject to any of the standards prescribed in this subpart is required to be covered by a certificate of conformity issued pursuant to this subpart.

§86.408–78 General standards; increase in emissions; unsafe conditions.

(a) Any system installed on or incorporated in a new motorcycle to enable such vehicle to conform to standards imposed by this subpart:

(1) Shall not in its operation or function cause the emission into the ambient air of any noxious or toxic substance that would not be emitted in the operation of such vehicle without such system, except as specifically permitted by regulation; and

(2) Shall not in its operation, function, or malfunction result in any unsafe condition endangering the motorcycle, its rider(s), or persons or property in close proximity to the vehicle.

(b) Every manufacturer of new motorcycles subject to any of the standards imposed by this subpart shall,

prior to taking any of the actions specified in section 203(a)(1) of the Act, test or cause to be tested motorcycles in accordance with good engineering practice to ascertain that such test vehicles will meet the requirements of this section for the useful life of the vehicle.

§ 86.409–78 Defeat devices, prohibition.

(a) No motorcycle shall be equipped with a defeat device.

(b) Defeat device means any element of design which:

(1) Senses temperature, vehicle speed, engine RPM, transmission gear, manifold vacuum, or any other parameter for the purpose of activating, modulating, delaying or deactivating the operation of any part of the emission control system and

(2) Reduces the effectiveness of the emission control system under conditions which may reasonably be expected to be encountered in normal urban vehicle operation and use, unless

(i) Such conditions are substantially included in the Federal emission test procedure, or

(ii) The need for the device is justified in terms of protecting the vehicle against damage or accident, or

(iii) The device does not go beyond the requirements of engine starting or warm-up.

§ 86.410–80 Emission standards for 1980 and later model year motorcycles.

(a)(1) Exhaust emissions from 1980 and later model year motorcycles shall not exceed:

(i) *Hydrocarbons.* 5.0 grams per vehicle kilometre.

(ii) *Carbon monoxide.* 12 grams per vehicle kilometre.

(2) The standards set forth in paragraph (a)(1) of this section refer to the exhaust emitted over driving schedules as set forth in subpart F and measured and calculated in accordance with those procedures.

(b) No crankcase emissions shall be discharged into the ambient atmosphere from any new motorcycle subject to this subpart.

[42 FR 1126, Jan. 5, 1977, as amended at 49 FR 48138, Dec. 10, 1984]

§ 86.410–90 Emission standards for 1990 and later model year motorcycles.

(a)(1) Exhaust emissions from 1990 and later model year gasoline-fueled, natural gas-fueled and liquefied petroleum gas-fueled motorcycles shall not exceed (compliance with these standards is optional prior to the 1997 model year for natural gas-fueled and liquefied petroleum gas-fueled motorcycles):

(i) *Hydrocarbons.* 5.0 grams per vehicle kilometer.

(ii) *Carbon monoxide.* 12 grams per vehicle kilometer.

(2) Exhaust emissions from 1990 and later model year methanol-fueled motorcycles shall not exceed:

(i) *Total hydrocarbon equivalent.* 5.0 grams per vehicle kilometer.

(ii) *Carbon monoxide.* 12 grams per vehicle kilometer.

(3) The standards set forth in paragraphs (a) (1) and (2) of this section refer to the exhaust emitted over driving schedule as set forth in subpart F and measured and calculated in accordance with those procedures.

(b) No crankcase emissions shall be discharged into the ambient atmosphere from any new motorcycle subject to this subpart.

[54 FR 14539, Apr. 11, 1989, as amended at 59 FR 48512, Sept. 21, 1994]

§ 86.411–78 Maintenance instructions, vehicle purchaser.

(a) The manufacturer shall furnish or cause to be furnished to the ultimate purchaser of each new motorcycle the written instructions for the periodic and anticipated maintenance and use of the vehicle by the ultimate purchaser as may be reasonable and necessary to assure the proper functioning of emission control systems for the vehicle's useful life.

(1) Such instructions shall be provided for those vehicle and engine components listed in appendix VI to this part (and for any other components) to the extent that maintenance of these components is necessary to assure the proper functioning of emission control systems.

(2) Such instructions shall be in the English language and in clear, and to the extent practicable, nontechnical language.

(b) The maintenance instructions required by this section shall:

(1) Contain a general description of the documentation which the manufacturer will require from the ultimate purchaser or any subsequent purchaser as evidence of compliance with the instructions, and

(2) Specify the performance of all scheduled maintenance performed by the manufacturer under §86.428.

§86.412–78 Maintenance instructions, submission to Administrator.

(a) *Instructions for ultimate purchaser.* (1) The manufacturer shall provide to the Administrator, at least 30 days before being supplied to the ultimate purchaser (unless the Administrator consents to a lesser period of time), a copy of the maintenance instructions which the manufacturer proposes to supply to the ultimate purchaser. The instructions must include the periodic and anticipated maintenance contained in the application for certification or contained in the manufacturers' records (if anticipated sales are less than 10,000 units). Such instructions must be reasonable and necessary to assure the proper functioning of the vehicle's emission control systems.

(2) Any revision to the maintenance instructions which will affect emissions shall be supplied to the Administrator at least 30 days before being supplied to the ultimate purchaser unless the Administrator consents to a lesser period of time.

(b) *Other instructions.* The manufacturer of any new motorcycle subject to any of the standards prescribed in this subpart shall submit to the Administrator at the time of issuance by the manufacturer, copies of all sales brochures, instructions, or explanations regarding the use, repair, adjustment, maintenance, or testing of such vehicle relevant to the control of crankcase or exhaust emissions, issued by the manufacturer for use by other manufacturers, assembly plants, distributors, dealers, repair facilities, and ultimate purchasers. Any material not translated into the English language need not be submitted unless specifically requested by the Administrator.

§86.413–78 Labeling.

(a)(1) The manufacturer of any motorcycle shall, at the time of manufacture, affix a permanent, legible label, of the type and in the manner described below, containing the information hereinafter provided, to all production models of such vehicles available for sale to the public and covered by a certificate of conformity.

(2) A permanent, legible label shall be affixed in a readily accessible position. Multi-part labels may be used.

(3) The label shall be affixed by the vehicle manufacturer who has been issued the certificate of conformity for such vehicle, in such a manner that it cannot be removed without destroying or defacing the label.

(4) The label shall contain the following information lettered in the English language in block letters and numerals, which shall be of a color that contrasts with the background of the label:

(i) *The label heading.* Vehicle Emission Control Information;

(ii) Full corporate name and trademark of the manufacturer;

(iii) Engine displacement (in cubic centimetres) and engine family identification;

(iv) Engine tuneup specifications and adjustments, as recommended by the manufacturer, including idle speed, ignition timing, and the idle air-fuel mixture setting procedure and value (e.g., idle CO, idle air-fuel ratio, idle speed drop). These specifications shall indicate the proper transmission position during tuneup;

(v) Any specific fuel or engine lubricant requirements (e.g., lead content, Research octane number, engine lubricant type);

(vi) An unconditional statement of conformity to USEPA regulations which includes the model year; for example, This Vehicle Conforms to USEPA Regulation Applicable to ..... Model Year New Motorcycles.

(b) The provisions of this section shall not prevent a manufacturer from also reciting on the label that such vehicle conforms to any other applicable Federal or State standards for new motorcycles or any other information

that such manufacturer deems necessary for, or useful to, the proper operation and satisfactory maintenance of the vehicle.

[42 FR 1126, Jan. 5, 1977, as amended at 42 FR 56737, Oct. 28, 1977]

§ 86.414–78 Submission of vehicle identification number.

(a) Upon request by the Administrator, the manufacturer of any motorcycle covered by a certificate of conformity shall, within 30 days, identify by vehicle identification number, the vehicle(s) covered by the certificate of conformity.

(b) The manufacturer of any motorcycle covered by a certificate of conformity shall furnish to the Administrator, at the beginning of each model year, any vehicle identification number coding system which identifies whether such vehicle(s) are covered by a certificate of conformity.

§ 86.415–78 Production vehicles.

(a) Any manufacturer obtaining certification shall supply to the Administrator, upon his request, a reasonable number of production vehicles selected by the Administrator which are representative of the engines, emission control systems, fuel systems, and transmissions offered and typical of production models available for sale under the certificate. These vehicles shall be supplied for testing at such time and place and for such reasonable periods as the Administrator may require.

(b) Any manufacturer obtaining certification shall notify the Administrator, on a yearly basis, of the number of vehicles of each engine family—engine displacement—emission control system—fuel system—transmission type—inertial mass category combination produced for sale in the United States during the preceding year.

(c) All motorcycles covered by a certificate of conformity shall prior to delivery to the ultimate purchaser be adjusted, by the manufacturer or his agent, to the ignition timing specification detailed in § 86.413.

[42 FR 1126, Jan. 5, 1977, as amended at 49 FR 48138, Dec. 10, 1984]

§ 86.416–80 Application for certification.

(a) New motorcycles produced by a manufacturer whose projected sales in the United States is 10,000 or more units (for the model year in which certification if sought) are covered by the following:

(1) An application for a certificate of conformity to the regulations in the English language applicable to new motorcycles shall be made to the Administrator by the manufacturer and shall be updated and corrected by amendment. Where possible, a manufacturer should include in a single application for certification, a description of all vehicles in each class for which certification is required. A manufacturer may, however, choose to apply separately for certification of part of his product line. The selection of test vehicles and the computation of test results will be determined separately for each application.

(2) The application shall be in writing signed by an authorized representative of the manufacturer, and shall include the following:

(i) Identification and description of the vehicles covered by the application and a description of their engine, emission control system and fuel system components. This shall include a detailed description of each auxiliary emission control device. Transmission gear ratios, overall drive ratios and vehicle mass (or range of mass) shall also be included. The label and its location shall be specified, § 86.413. Available optional equipment shall be described.

(ii) The range of available fuel and ignition system adjustments.

(iii) Projected U.S. sales data sufficient to enable the Administrator to select a test fleet representative of the vehicles for which certification is requested. If reduced testing based on low sales volume is requested the method of predicting sales shall be described.

(iv) A description of the test equipment (if applicable) and fuel and engine lubricant proposed to be used.

(v) A description of the proposed service accumulation procedure and a description of the proposed scheduled maintenance.

(vi) A statement of recommended periodic and anticipated maintenance and procedures necessary to assure that the vehicles covered by a certificate of conformity in operation conform to the regulations, listings of the fuels and lubricants to be recommended to the ultimate purchaser and a description of the program for training of personnel for such maintenance, and the equipment required to perform this maintenance.

(vii) A description of normal assembly line operations and adjustments if such procedures exceed 100 km (62 miles) or three hours of engine operations.

(3) Completed copies of the application and of any amendments thereto, and all notifications under §§ 86.438 and 86.439 shall be submitted in such multiple copies as the Administrator may require.

(4) For purposes of this section, ''auxiliary emission control device'' means any element of design which senses temperature, vehicle speed, engine RPM, transmission gear, manifold vacuum, or any other parameter for the purpose of activating, modulating, delaying, or deactivating the operation of any part of the emission control system.

(b) New motorcycles produced by a manufacturer whose projected sales in the United States is less than 10,000 units (for the model year in which certification is sought) are covered by the following:

(1) All the information that would otherwise be required to be submitted to EPA under paragraph (a)(2) of this section must be made a part of the manufacturer's records, except there is no requirement to submit the information to the Administrator or receive approval from the Administrator.

(2) Section 86.437 details the statements that these manufacturers are required to provide to the Administrator.

(c) For the purpose of determining applicability of paragraphs (a) or (b) of this section, where there is more than one importer or distributor of vehicles manufactured by the same person, the projected sales shall be the aggregate of the projected sales of those vehicles by such importers or distributors.

(d)(1) The Administrator has determined that the following certification procedure may be used to demonstrate compliance for each motorcycle engine family for which certification is sought. Manufacturers may follow these procedures at their option.

(i) The manufacturer shall satisfy all applicable requirements of part 86 necessary to demonstrate compliance with the standards for each class of new motorcycles for which certification is sought.

(ii) As specifically allowed by the Administrator the manufacturer shall assume the responsibility for part or all of the decisions applicable to the family for which certification is sought and which are within the jurisdiction of the Administrator, with the exception that the Administrator will determine whether a test motorcycle has met the applicable emission standards.

(iii) The manufacturer shall maintain, update, and correct all records and information required.

(iv) The Administrator may review a manufacturer's records at any time. At the Administrator's discretion, this review may take place either at the manufacturer's facility or at another facility designated by the Administrator.

(v) At the Administrator's request, the manufacturer shall notify the Administrator of the status of the certification program including projected schedules of those significant accomplishments specified by the Administrator.

(vi) The manufacturer shall permit the Administrator to inspect any facilities, records, and vehicles from which data were obtained under the abbreviated certification review procedure.

(vii) Upon completing all applicable requirements of part 86 the manufacturer shall submit a separate application for a certificate of conformity for each class of new motorcycles for which certification is sought. Such application shall be made in writing to the Administrator by the manufacturer.

(A) The Administrator may approve or disapprove in whole or in part an application for certification according to the procedures specified in § 86.417–78(b).

(B) If, after a review of the application for certification, test reports and data submitted by the manufacturer, data obtained during an inspection, and any other pertinent data or information, the Administrator determines that a test vehicle(s) has not met the requirements of the Act and the applicable subpart, he will notify the manufacturer in writing and set forth the reason(s) for the determination.

(2) Those families which are not following the procedure described in paragraph (d)(1) of this section will follow the procedure in this subpart with the exception of paragraph (d)(1) of this section.

(e) The Administrator may require that an engine family previously allowed to be subjected to the abbreviated certification review procedure be transferred to the complete review procedure.

[42 FR 56737, Oct. 28, 1977, as amended at 45 FR 26045, Apr. 17, 1980; 49 FR 48138, Dec. 10, 1984]

§ 86.417–78 Approval of application for certification.

(a) After a review of the application for certification and any other information which the Administrator may require, the Administrator may approve the application and select a test fleet as appropriate.

(b) The Administrator may disapprove in whole or in part an application for certification for reasons including incompleteness, inaccuracy, inappropriate proposed distance accumulation procedures, maintenance, test equipment, label content or location, fuel or lubricant, and incorporation of defeat devices in vehicles described by the application. Where any part of an application is rejected the Administrator shall notify the manufacturer in writing and set forth the reasons for such rejection. The manufacturer may request a hearing under § 86.443.

§ 86.418–78 Test fleet selection.

(a) Test fleet selection and requirements on test vehicles are found in §§ 86.419 to 86.423. This selection process is also graphically depicted in Figure E78–1.

Figure E78-1 Selection Process

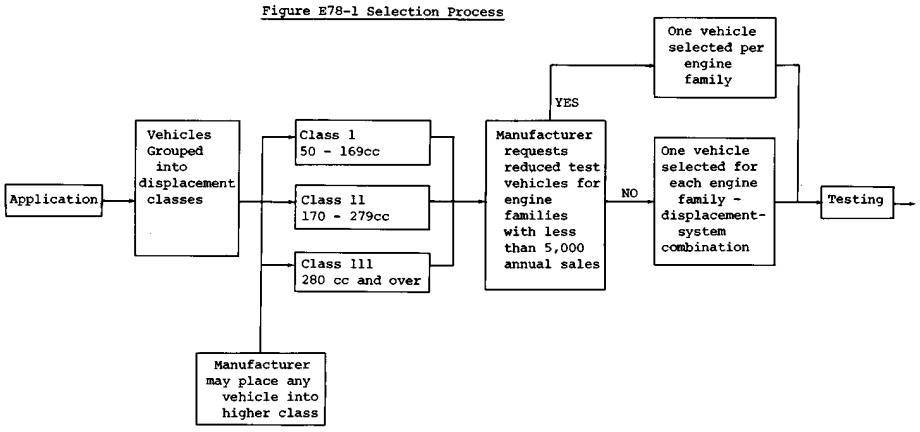

(b) [Reserved]

§ 86.419–78 Engine displacement, motorcycle classes.

(a)(1) Engine displacement shall be calculated using nominal engine values and rounded to the nearest whole cubic centimetre, in accordance with ASTM E 29–67.

(2) For rotary engines, displacement means the maximum volume of a combustion chamber between two rotor tip

seals minus the minimum volume of that combustion chamber between those two rotor tip seals times three times the number of rotors.

cc=(max. chamber volume − min. chamber volume) × 3 × no. of rotors

(b) Motorcycles will be divided into classes based on engine displacement.

(1) Class I—50 to 169 cc (3.1 to 10.4 cu. in.).

(2) Class II—170 to 279 cc (10.4 to 17.1 cu. in.).

(3) Class III—280 cc and over (17.1 cu. in. and over).

(c) At the manufacturer's option, a vehicle described in an application for certification may be placed in a higher class (larger displacement). All procedures for the higher class must then be complied with, compliance with emission standards will be determined on the basis of engine displacement.

§86.420–78 Engine families.

(a) The vehicles covered in the application will be divided into groupings whose engines are expected to have similar emission characteristics throughout their useful life. Each group of engines with similar emission characteristics shall be defined as a separate engine family.

(b) *Reciprocating families.* To be classed in the same engine family, reciprocating engines must be identical in all of the following applicable respects:

(1) The combustion cycle.

(2) The cooling mechanism.

(3) The cylinder configuration (inline, vee, opposed, bore spacings, etc.).

(4) The number of cylinders.

(5) The engine displacement class, §86.419.

(6) The method of air aspiration.

(7) The number of catalytic converters, location, volume, and composition.

(8) The thermal reactor characteristics.

(9) The number of carburetors.

(10) The prechamber characteristics.

(c) At the manufacturer's option, reciprocating engines identical in all the respects listed in paragraph (b) of this section may be further divided into different engine families if the Administrator determines that they may be expected to have different emission characteristics. This determination will be based upon a consideration of features such as:

(1) The bore and stroke.

(2) The combustion chamber configuration.

(3) The intake and exhaust timing method of actuation (poppet valve, reed valve, rotary valve, etc.).

(4) The intake and exhaust valve or port sizes, as applicable.

(5) The fuel system.

(6) The exhaust system.

(d) *Rotary families.* To be classed in the same engine family, rotary combustion cycle engines must be identical in all of the following applicable respects:

(1) The major axis of the epitrochoidal curve.

(2) The minor axis of the epitrochoidal curve.

(3) The generating radius of the epitrochoidal curve.

(4) The cooling mechanism.

(5) The number of rotors.

(6) The engine displacement class, §86.419.

(7) The method of air aspiration.

(8) The number of catalytic converters, location, volume and composition.

(9) The thermal reactor characteristics.

(10) The number of carburetors.

(11) The prechamber characteristics.

(e) At the manufacturer's option, rotary combustion cycle engines identical in all the respects listed in paragraph (d) of this section, may be further divided into different engine families if the Administrator determines that they may be expected to have different emission characteristics. This determination will be based upon a consideration of features, such as:

(1) The width of the rotor housing.

(2) The type and location of intake port (side, peripheral, combination, etc.).

(3) The number of spark plugs per rotor.

(4) The fuel system.

(5) The exhaust system.

(f) Where engines are of a type which cannot be divided into engine families based upon the criteria listed in paragraphs (b) and (d) of this section, the Administrator will establish families

of those engines based upon the features most related to their emission characteristics.

[42 FR 1126, Jan. 5, 1977, as amended at 44 FR 48205, Aug. 17, 1979]

§ 86.421–78 Test fleet.

(a) A test vehicle will be selected by the Administrator to represent each engine-displacement-system combination. The configuration (engine calibration, transmission, drive ratio, mass, options, etc.) in the manufacturer's application which the Administrator believes has the greatest probability of exceeding the standards will be selected.

(b) At the manufacturer's option, the Administrator will only select one vehicle to represent each engine family where the total projected annual sales for that family are less than 5,000 vehicles.

(c) A manufacturer may elect to operate and test additional vehicles which are identical to those selected by the Administrator. Written notice of a commitment to operate and test additional vehicles shall be given to the Administrator prior to the start of testing and not later than 30 days following notification of the test fleet selection. The results of tests performed by the manufacturer will be combined to determine deterioration factors. Each vehicle must meet applicable standards when tested by the Administrator and when those results are projected to the useful life.

(d) In lieu of testing a test vehicle and submitting data therefore, a manufacturer may, with the prior written approval of the Administrator, submit exhaust emission data on a similar vehicle for which certification has previously been obtained or for which all applicable data has previously been submitted.

§ 86.422–78 Administrator's fleet.

The Administrator may require additional test vehicles identical in all material respects to vehicles selected in accordance with § 86.421. The number of vehicles selected shall not increase the size of the test fleet by more than 20 percent or one vehicle, whichever is greater.

§ 86.423–78 Test vehicles.

(a)(1) Before beginning service accumulation on a test vehicle, the manufacturer may perform a zero-kilometer exhaust emission test.

(2) If such a test is performed, the data shall be submitted to the Administrator when the application is submitted.

(3) Zero-kilometer test results shall not be included in the determination of deterioration factors.

(b) Once a manufacturer begins to operate a test vehicle, as indicated by compliance with paragraph (a) of this section, the data from the vehicle will be used, unless specified otherwise by the Administrator. Discontinuation of a vehicle shall be allowed only with the written consent of the Administrator.

(c) Test vehicles shall be calibrated at zero kilometres within the production tolerances applicable to the manufacturer's specifications.

(d) The Administrator may disqualify a vehicle which receives assembly line operations and adjustments which will not be performed on production vehicles.

[42 FR 1126, Jan. 5, 1977, as amended at 49 FR 48138, Dec. 10, 1984]

§ 86.425–78 Test procedures.

(a) Motorcycle emission test procedures are found in subpart F.

(b) The Administrator may prescribe emission test procedures for any motorcycle which he determines is not susceptible to satisfactory testing by the procedures set forth in subpart F.

(c) Testing of any type with respect to any test vehicle other than that specified in this subpart and subpart F is not allowed except as specifically authorized by the Administrator.

§ 86.426–78 Service accumulation.

(a) The procedure for service accumulation will be the Durability Driving Schedule as specified in appendix IV to this part. A modified procedure may also be used if approved in advance by the Administrator. Except with the advance approval of the Administrator, all vehicles will accumulate distance at a measured curb mass which is within 5 kg (11.0 lb) of the loaded vehicle mass specified by the Administrator.

(b) During service accumulation, vehicles shall not be operated for more than 12 hours during an operating sequence. Engine shutdowns are permitted during the operating sequence, but the periods of shutdown are not included in the 12 hour total. Following each operating sequence, the vehicle shall soak, without operation, for a minimum of 8 hours. During soak periods, the vehicle shall be exposed to normal outside ambient temperatures and humidity conditions unless vehicle maintenance or servicing is being performed.

(c) The manufacturer's recommended shifting procedure will be used for laps 1 through 10. Lap 11 shifts (W.O.T. accelerations) must be conducted at the manufacturer's recommended maximum safe engine speed.

[42 FR 1126, Jan. 5, 1977, as amended at 42 FR 56737, Oct. 28, 1977]

§86.427–78 Emission tests.

(a)(1) Each test vehicle shall be driven with all emission control systems installed and operating for the following total test distances, or for such lesser distances as the Administrator may agree to as meeting the objectives of this procedure. (See §86.419 for class explanation.)

Displacement class	Total test distance (kilometers)	Minimum test distance (kilometers)	Minimum number of tests
I	6,000	2,500	4
II	9,000	2,500	4
III	15,000	3,500	4

(2) A zero kilometer emission test may be performed prior to the beginning of service accumulation.

(b) All vehicles shall undergo at least four emission tests; one at the minimum test distance, one before and one after periodic maintenance, and one at the total test distance. If no maintenance is scheduled, then at least two tests will be performed, at equal intervals, between the minimum and total test distances. Additional tests may be performed; such tests must be at equal intervals and approved by the Administrator prior to starting service accumulation.

(c) Where the Administrator agrees to a lesser distance for service accumulation, he may modify the maintenance provisions of this subpart.

(d) All tests required by this subpart must be conducted at an accumulated distance within 250 kilometers (155 mi) of the nominal distance at each test point.

(e)(1) If a manufacturer conducts multiple tests at any test point at which the data are intended to be used in the calculation of the deterioration factor, the number of tests must be the same at each point and may not exceed three valid tests unless the manufacturer chooses to average the test results.

(2) If the manufacturer chooses to average the test results at a test point, he may conduct more tests than the minimum number of tests conducted at any other test point.

The results of the multiple tests shall be averaged to create a single value which is the test point value used in the deterioration factor calculation specified in §86.432–78.

(3) When using this option to generate data for a particular test point, the manufacturer must include in the average all valid test data generated at that test point.

(4) The manufacturer shall follow the same procedure for all exhaust pollutants.

(5) The test results obtained from the emission tests performed before and after maintenance affecting emissions shall not be averaged.

(f) The Administrator may require that any one or more of the test vehicles be submitted to him, at such places as he may designate, for the purpose of conducting emissions tests. The Administrator may specify that he will conduct such testing at the manufacturer's facility, in which case instrumentation and equipment specified by the Administrator shall be made available by the manufacturer for test operations. Any testing conducted at a manufacturer's facility pursuant to this paragraph shall be scheduled by the manufacturer as promptly as possible.

(g) Whenever the Administrator conducts a test on a test vehicle, the results of that test, unless subsequently invalidated by the Administrator, shall comprise the data for the vehicle at

that prescribed test point and the manufacturer's data for that prescribed test point shall not be used in determining compliance with emission standards.

[42 FR 1126, Jan. 5, 1977, as amended at 49 FR 48139, Dec. 10, 1984]

§ 86.428–80 Maintenance, scheduled; test vehicles.

(a) Periodic maintenance on the engine, emission control system, and fuel system of test vehicles shall be scheduled for performance at the same distance intervals that will be specified in the manufacturer's maintenance instructions furnished to the ultimate purchaser. Such maintenance shall be performed only under the following provisions.

(b) Periodic major engine tune-ups to the manufacturer's specifications may be performed no more frequently than as follows nor may any tune-up be performed within 1000 km prior to the official test.

Displacement class	Minimum interval (kilometer)
I	3,000
II	3,000
III	4,000

(c) A scheduled major engine tune-up shall be restricted to items listed below and shall be conducted in a manner consistent with service instructions and specifications provided by the manufacturer for use by customer service personnel. The following items may be inspected, replaced, cleaned, adjusted, and/or serviced as required: (1) Breaker points, timing, (2) idle speed and idle air/fuel mixture, (3) valve lash, (4) engine bolt torque, and (5) spark plugs.

(d) The Administrator will specify the ignition timing, idle air fuel mixture and other fuel system adjustments to be used at each tune-up. The settings selected will be those the Administrator deems appropriate within the physically available range.

(e) Periodic change of engine and transmission oil, and change or service of oil, air, and fuel filters will be allowed at the same distance intervals that will be specified in the manufacturer's maintenance instructions.

(f) Requests for authorization of periodic maintenance of emission control related components not specifically authorized to be maintained by this section, and for anticipated maintenance (see § 86.428), must be made prior to the beginning of distance accumulation. The Administrator will approve the performance of such maintenance if the manufacturer makes a satisfactory showing that the maintenance will be performed on vehicles in use and that the maintenance is reasonable and necessary.

(1) The EGR system may be serviced a maximum of two times during the durability service accumulation if failure of the EGR system activates an audible and/or visual signal approved by the Administrator which alerts the vehicle operator to the need for EGR system maintenance, or if the need for periodic maintenance of the EGR system is overtly signalled to the vehicle operator by an appropriate means, e.g., an indicator light or significantly reduced driveability performance.

(2) The catalytic converter may be serviced only once during the durability service accumulation if failure of the catalytic converter activates an audible and/or visual signal approved by the Administrator which alerts the vehicle operator to the need for catalytic converter maintenance, or if the need for periodic maintenance of the catalytic converter is overtly signalled to the vehicle operator by an appropriate means, e.g., an indicator light or significantly reduced driveability performance.

(g) Certain engine components may require maintenance which, by its nature, cannot be scheduled for periodic intervals, but which the manufacturer believes will be necessary. For example, piston and cylinder replacement caused by piston seizure which results in the vehicle being inoperative; or in the case of two-stroke engines, decarbonization, the need for which is signalled to the vehicle operator by significantly reduce driveability performance. Such maintenance is designated anticipated maintenance. Anticipated maintenance must be identified by the manufacturer and approved

as being appropriate by the Administrator prior to the start of service accumulation. The approximate distance at which the need for anticipated maintenance may arise must be specified in the application for certification.

(h) Complete emission tests (see subpart F) are required, unless waived by the Administrator, before and after any vehicle maintenance which may reasonably be expected to affect emissions.

§86.429–78 Maintenance, unscheduled; test vehicles.

(a) Any unscheduled engine, emission control system, or fuel system adjustment, repair, removal, disassembly, cleaning, or replacement on vehicles shall be performed only with the advance approval of the Administrator.

(1) In the case of unscheduled maintenance, such approval will be given if the Administrator:

(i) Has made a preliminary determination that part failure or system malfunction, or the repair of such failure or malfunction, does not render the vehicle unrepresentative of vehicles in use, and does not require direct access to the combustion chamber, except for spark plug, fuel injection component, or removable prechamber removal or replacement; and

(ii) Has made a determination that the need for maintenance or repairs is indicated by an overt indication of malfunction such as persistent misfire, vehicle stall, overheating, fluid leakage, loss of oil pressure, or charge indicator warning.

(2) Emission measurements may not be used as a means of determining the need for unscheduled maintenance under paragraph (a)(1)(i) of this section.

(b) Repairs to vehicle components of test vehicles, other than the engine, emission control system, or fuel system, shall be performed only as a result of part failure, vehicle system malfunction, or with the advance approval of the Administrator.

(c) The Administrator shall be given the opportunity to verify the extent of an overt indication of part failure and/or vehicle malfunction (e.g., misfire, stall), or an activation of an audible and/or visual signal, prior to the performance of any maintenance to which such overt indication or signal is relevant under the provisions of this section.

(d) Equipment, instruments, or tools may not be used to identify malfunctioning, maladjusted, or defective engine components unless the same or equivalent equipment, instruments, or tools will be available at dealerships and other service outlets and

(1) Are used in conjunction with scheduled maintenance on such components, and

(2) Are used subsequent to the identification of a vehicle or engine malfunction, as provided in paragraph (a)(1) of this section for durability or emission data vehicles, or

(3) Unless specifically authorized by the Administrator.

(e) If the Administrator determines that part failure or system malfunction occurrence and/or repair rendered the vehicle unrepresentative of vehicles in use, the vehicle shall not be used as a test vehicle.

(f) Complete emission tests are required, unless waived by the Administrator, before and after any vehicle maintenance which may reasonably be expected to affect emissions.

§86.430–78 Vehicle failure.

Any test vehicle which incurs major mechanical failure necessitating disassembly of the engine shall not be used as a test vehicle. This prohibition does not apply to failures occurring after the completion of all required tests at the total test distance.

[49 FR 48139, Dec. 10, 1984]

§86.431–78 Data submission.

(a) Data from all tests (including voided tests) performed by a manufacturer with total projected sales in excess of 10,000 vehicles shall be included in the application.

(b) The manufacturer shall furnish to the Administrator explanation for voiding any test. The Administrator will determine if voiding the test was appropriate based upon the explanation given by the manufacturer. If the Administrator determines that voiding the test was not appropriate, the Administrator may require that the data

from that test be used in the calculation of the deterioration factor for emissions.

(c) When unscheduled or anticipated maintenance is performed, a complete record of all pertinent maintenance, including the malfunction diagnosis made, the corrective action taken, and the test data obtained shall be included in the application.

(d) A complete record of all maintenance shall be supplied.

[42 FR 1126, Jan. 5, 1977, as amended at 49 FR 48139, Dec. 10, 1984]

§ 86.432–78 Deterioration factor.

(a) Deterioration factors shall be developed for each test vehicle from the emission test results. A separate factor shall be developed for each pollutant. The applicable data to be used in calculating these factors are:

(1) The results from all valid tests conducted by the manufacturer or Administrator at scheduled test intervals.

(2) The results from tests conducted before and after scheduled maintenance unless specifically excluded by the Administrator.

(3) The results from tests conducted before and after unscheduled maintenance, if approval of the maintenance by the Administrator was conditioned on the data being used in the deterioration factor calculation.

(b) Emission results which are less than 0.10 g/km shall be considered to be 0.10 g/km for purposes of this section.

(c) Test results for each pollutant shall be plotted as a function of the service accumulated at the start of the emission test, rounded to the nearest kilometre. These results shall be correlated to a straight line, fit by the method of least squares.

(d) An exhaust emission deterioration factor will be calculated by dividing the predicted emissions at the useful life distance by the predicted emissions at the total test distance. Predicted emissions are obtained from the correlation developed in paragraph (c) of this section.

Factor = Predicted total distance emissions/ Predicted total test distance emissions

These interpolated and extrapolated values shall be carried out to four places to the right of the decimal point before dividing one by the other to determine the deterioration factor. The results shall be rounded to three places to the right of the decimal point in accordance with ASTM E 29–67.

(e) Deterioration factors computed to be less than 1.000 shall be 1.000.

(f)(1) The manufacturer has the option of applying an outlier test point procedure to completed durability data within its certification testing program for a given model year.

(2) The outlier procedure will be specified by the Administrator.

(3) For any pollutant, durability-data test points that are identified as outliers shall not be included in the determination of deterioration factors if the manufacturer has elected this option.

(4) The manufacturer shall specify to the Administrator, before the certification of the first engine family for that model year, if it intends to use the outlier procedure.

(5) The manufacturer may not change procedures after the first engine family of the model year is certified.

(6) Where the manufacturer chooses to apply the outlier procedure to a data set containing data which were averaged under § 86.427–78(e), the outlier procedure shall be completed before averaging the data.

[42 FR 1126, Jan. 5, 1977, as amended at 42 FR 56737, Oct. 28, 1977; 49 FR 48139, Dec. 10, 1984]

§ 86.434–78 Testing by the Administrator.

(a) At the conclusion of service accumulation, and after emission tests for deterioration, the Administrator may require confirmatory testing. The Administrator will designate where such testing shall be performed.

(b) The manufacturer may request a retest. The results of the retest will be used to determine compliance.

(c) If the emission results exceed the standard, certification will be denied.

[49 FR 48139, Dec. 10, 1984]

§ 86.435–78 Extrapolated emission values.

(a) If the deterioration factor lines are below the standards between the minimum test distance and the useful life, or if all points used to generate

the lines are below the standards, predicted useful life emissions shall be calculated. If not, the manufacturers may elect to withdraw the vehicle or accumulate additional service.

(b) The emission test results of each pollutant obtained from the half life test will be multiplied by the appropriate deterioration factors to determine useful life emissions.

(1) If the useful life emissions are below the standards, certification will be granted.

(2) If any of the useful life emissions exceed the emission standards, the vehicle must (if not withdrawn) accumulate distance to the useful life.

[42 FR 1126, Jan. 5, 1977, as amended at 49 FR 48139, Dec. 10, 1984]

§86.436–78 Additional service accumulation.

(a) Additional service up to the useful life will be accumulated under the same conditions as the initial service accumulation.

(b) New deterioration lines will be generated using all applicable test points up to the useful life. The same procedures for determining the original deterioration lines will be used.

(c) [Reserved]

(d) To qualify for certification:

(1) The full life emission test results must be below the standards, and

(2) The deterioration line must be below the standard at the minimum test distance and the useful life, or all points used to generate the line, must be below the standard.

(e) If the vehicle is unable to complete the total distance due to engine mechanical failure, certification will be granted if:

(1) The mechanical failure was anticipated, §86.428, and

(2) A new deterioration line calculated using the procedure described in §86.436–78(b) is below the standard at the minimum test distance and at the useful life, and,

(3) The results of the half life emission tests, when adjusted by the new deterioration factors, are below the standards.

[42 FR 1126, Jan. 5, 1977, as amended at 49 FR 48139, Dec. 10, 1984]

§86.437–78 Certification.

(a) New motorcycles produced by a manufacturer whose projected sales in the United States is 10,000 or more units (for the model year in which certification is sought) are covered by the following:

(1) The manufacturer shall submit to the Administrator a statement that the test vehicles with respect to which data are submitted have been tested in accordance with the applicable test procedures, that they meet the requirements of such tests, and that, on the basis of such tests, they conform to the requirements of the regulations in this part. If such statements cannot be made with respect to any vehicle tested, the vehicle shall be identified, and all pertinent test data relating thereto shall be supplied.

(2)(i) If, after a review of the test reports and data submitted by the manufacturer, data derived from any inspection carried out under §86.441 and any other pertinent data or information, the Administrator determines that a test vehicle(s) meets the requirements of the Act and of this subpart, he will issue a certificate of conformity with respect to such vehicle(s) except in cases covered by §86.442.

(ii) Such certificate will be issued for such period not to exceed one model year as the Administrator may determine and upon such terms as he may deem necessary to assure that any new motorcycle covered by the certificate will meet the requirements of the act and of this subpart.

(iii) The certificate will cover all vehicles represented by the test vehicle and will certify compliance with no more than one set of applicable standards.

(3)(i) If, after a review of the test reports and data submitted by the manufacturer, data derived from any additional testing conducted pursuant to §86.427, or information derived from any inspection carried out under §86.441, or any other pertinent data or information, the Administrator determines that one or more test vehicles of the certification test fleet do not meet applicable standards, he will notify the manufacturer in writing, setting forth the basis for his determination. The

manufacturer may request a hearing on the Administrator's determination.

(ii) The manufacturer may, at his option, proceed with any of the following alternatives with respect to any vehicles represented by a test vehicle(s) determined not in compliance with applicable standards:

(A) Request a hearing.

(B) Delete from the application for certification the vehicles represented by the failing test vehicle. (Vehicles so deleted may be included in a later request for certification under paragraph (b)(2)(iii) of this section.) The Administrator will then select in place of each failing vehicle an alternate vehicle chosen in accordance with selection criteria employed in selecting the vehicle that failed, or

(C) Repair the test vehicle and demonstrate by testing that it meets applicable standards. Another vehicle which is in all material respects the same as the first vehicle, as repaired, shall then be operated and tested in accordance with applicable test procedures.

(iii) If the manufacturer does not request a hearing or present the required data under subparagraph (2) of this paragraph, the Administrator will deny certification.

(b) New motorcycles produced by a manufacturer whose projected sales in the United States is less than 10,000 units (for the model year in which certification is sought) are covered by the following:

(1) The manufacturer shall submit to the Administrator an application for certification containing the following:

(i) A brief description of the vehicles to be covered by the certificate (the manufacturer's sales data book or advertising including specifications will satisfy this requirement for most manufacturers).

(ii) A statement signed by the authorized representative of the manufacturer stating: ''The vehicles described herein have been tested in accordance with the provisions of subpart E, part 86, title 40, of the Code of Federal Regulations, and on the basis of these tests are in conformance with that subpart. All of the data and records required by that subpart are on file and are available for inspection by the Administrator. Total sales of vehicles subject to this subpart will be limited to less than 10,000 units.''

(2) If, after a review of the statement the Administrator determines that the requirements of this subpart have been met, he will issue a certificate of conformity with respect to the described vehicles except in cases covered by § 86.442.

(3) Such certificate will be issued for such a period not to exceed one model year as the Administrator may determine and upon such terms as he may deem necessary to assure that any new motorcycle covered by the certificate will meet the requirements of the Act and of this subpart.

(4) The certificate will cover all vehicles described by the manufacturer.

(5)(i) If, after a review of the statements and descriptions submitted by the manufacturer, the Administrator determines that the applicable requirements have not been met, he will notify the manufacturer in writing, setting forth the basis for his determination. The manufacturer may request a hearing on the Administrator's determination.

(ii) If the manufacturer does not request a hearing or present the required information the Administrator will deny certification.

[42 FR 1126, Jan. 5, 1977, as amended at 42 FR 56738, Oct. 28, 1977; 46 FR 50496, Oct. 13, 1981; 47 FR 49807, Nov. 2, 1982]

§ 86.438–78 Amendments to the application.

(a) The manufacturer shall inform the Administrator by way of amendment to the application of any proposed changes to vehicles in production or additional vehicles to be produced. The Administrator will, if appropriate, select a new test vehicle. Except as provided in § 86.439, no changes may be instituted until approved by the Administrator.

(b) The Administrator may allow reduced testing.

§ 86.439–78 Alternative procedure for notification of additions and changes.

(a)(1) A manufacturer may, in lieu of notifying the Administrator in advance of an addition of a vehicle or a change in a vehicle under § 86.438–78, notify the

Administrator concurrently with the addition of a vehicle or the making of a change in a vehicle if the manufacturer determines that following the change all vehicles affected by the addition or change will still meet the applicable emission standards.

(2) Such notification shall include a full description of the addition or change and any supporting documentation the manufacturer may include to support the manufacturer's determination that the addition or change does not cause noncompliance.

(3) The manufacturer's determination that the addition or change does not cause noncompliance shall be based on an engineering evaluation of the addition or change and/or testing.

(b) [Reserved]

(c)(1) The Administrator may require that additional emission testing be performed to support the manufacturer's original determination submitted in accordance with paragraph (a) of this section.

(2) If additional testing is required, the Administrator shall proceed as in §86.438–78.

(3) Additional test data, if requested, must be provided within 30 days of the request or the manufacturer must rescind the addition or change immediately.

(4) The Administrator may grant additional time to complete testing.

(5) If based on this additional testing or any other information, the Administrator determines that the vehicles affected by the addition or change do not meet the applicable standards, the Administrator will notify the manufacturer to rescind the addition or change immediately upon receipt of the notification.

(d) Election to produce vehicles under this section will be deemed to be a consent to recall all vehicles which the Administrator determines under §86.438–78 do not meet applicable standards, and to cause such nonconformity to be remedied at no expense to the owner.

[49 FR 48139, Dec. 10, 1984]

§86.440–78 Maintenance of records.

(a) The manufacturer of any motorcycle subject to any of the standards or procedures prescribed in this subpart shall establish, maintain and retain the following adequately organized and indexed records;

(1) *General records.* (i)(A) Identification and description of all certification vehicles for which testing is required under this subpart.

(B) A description of all emission control systems which are installed on or incorporated in each certification vehicle.

(C) A description of all procedures used to test each such certification vehicle.

(ii) A properly completed application, following the format prescribed by the U.S. EPA for the appropriate year of production, fulfills each of the requirements of this paragraph.

(2) *Individual records.* (i) A brief history of each motocycle used for certification under this subpart including:

(A)(*1*) In the case where a current production engine is modified for use in a certification vehicle, a description of the process by which the engine was selected and of the modification made.

(*2*) In the case where the engine for a certification vehicle is not derived from a current production engine, a general description of the build-up of the engine (e.g., experimental heads were cast and machined according to supplied drawings, etc.)

(*3*) In both cases above, a description of the origin and selection process for the carburetor, fuel system, emission control system components, and exhaust after treatment device shall be included.

(*4*) The required description shall specify the steps taken to assure that the certification vehicle with respect to its engine, drive train, fuel system, emission control system components, exhaust after treatment device, vehicle mass, or any other device or component that can reasonably be expected to influence exhaust emissions, will be representative of production vehicles, and that either all components and/or vehicle construction processes, component inspection and selection techniques, and assembly techniques employed in constructing such vehicles are reasonably likely to be implemented for production vehicles, or they are as closely analogous as practicable

to planned construction and assembly processes.

(B) A complete record of all emission tests performed (except tests performed by EPA directly) including test results, the date and purpose of each test, and the distance accumulated on the vehicle.

(C) The date of each service accumulation run, listing the distance accumulated.

(D) [Reserved]

(E) A record and description of all maintenance and other servicing performed, giving the date of the maintenance or service and the reason for it.

(F) A record and description of each test performed to diagnose engine or emissions control system performance, giving the date and time of the test and the reason for it.

(G) [Reserved]

(H) A brief description of any significant events affecting the vehicle during any time in the period covered by the history, not described by an entry under one of the previous headings, including such extraordinary events as vehicle accidents or dynamometer runaway.

(ii) Each such history shall be started on the date that the first of any of the selection or build-up activities in paragraph (a)(2)(i)(A) of this section occurred with respect to the certification vehicle, shall be updated each time the operational status of the vehicle changes or additional work is performed on it, and shall be kept in a designated location.

(3) All records, other than routine emission test records, required to be maintained under this subpart shall be retained by the manufacturer for a period of six (6) years after the issuance of all certificates of conformity to which they relate. Routine emission test records shall be retained by the manufacturer for a period of one (1) year after issuance of all certificates of conformity to which they relate. Records may be retained as hard copy or reduced to microfilm, punch cards, etc., depending on the record retention procedures of the manufacturer: *Provided* That, in every case, all the information contained in the hard copy shall be retained.

[42 FR 1126, Jan. 5, 1977, as amended at 42 FR 56738, Oct. 28, 1977; 49 FR 48140, Dec. 10, 1984]

§ 86.441–78 Right of entry.

(a) Any manufacturer who has applied for certification of a new motorcycle subject to certification tests under this subpart shall admit or cause to be admitted any EPA Enforcement Officer during operating hours on presentation of any credentials to any of the following:

(1) Any facility where any such tests or any procedures or activities connected with such tests are or were performed.

(2) Any facility where any new motorcycle which is being, was or is to be tested is present.

(3) Any facility where any construction process or assembly process used in the modification or build-up of such a vehicle into a certification vehicle is taking place or has taken place.

(4) Any facility where any record or other document relating to any of the above is located.

(b) Upon admission to any facility referred to in paragraph (c)(1) of this section, any EPA Enforcement Officer shall be allowed:

(1) To inspect and monitor any part or aspect of such procedures, activities, and testing facilities, including, but not limited to, monitoring vehicle preconditioning, emissions tests and service accumulation, maintenance, and vehicle soak and storage procedures; and to verify correlation or calibration of test equipment;

(2) To inspect and make copies of any such records, designs, or other documents; and

(3) To inspect and/or photograph any part or aspect of any such certification vehicle and any components to be used in the construction thereof.

(c) In order to allow the Administrator to determine whether or not production motorcycles conform in all material respects to the design specifications which applied to those vehicles described in the application for certification for which a certificate of conformity has been issued and to standards prescribed under section 202 of the Act, any manufacturer shall

admit any EPA Enforcement Officer on presentation of credentials to both:

(1) Any facility where any document design, or procedure relating to the translation of the design and construction of engines and emission related components described in the application for certification or used for certification testing into production vehicles is located or carried on; and

(2) Any facility where any motorcycles to be introduced into commerce are manufactured or assembled.

(d) On admission to any such facility referred to in paragraph (c)(3) of this section, any EPA Enforcement Officer shall be allowed:

(1) To inspect and monitor any aspects of such manufacture or assembly and other procedures;

(2) To inspect and make copies of any such records, documents or designs; and

(3) To inspect and photograph any part or aspect of any such new motorcycles and any component used in the assembly thereof that are reasonably related to the purpose of his entry.

(e) Any EPA Enforcement Officer shall be furnished by those in charge of a facility being inspected with such reasonable assistance as he may request to help him discharge any function listed in this paragraph. Each applicant for or recipient of certification is required to cause those in charge of a facility operated for its benefit to furnish such reasonable assistance without charge to EPA whether or not the applicant controls the facility.

(f) The duty to admit or cause to be admitted any EPA Enforcement Officer applies whether or not the applicant owns or controls the facility in question and applies both to domestic and to foreign manufacturers and facilities. EPA will not attempt to make any inspections which it has been informed that local law forbids. However, if local law makes it impossible to do what is necessary to insure the accuracy of data generated at a facility, no informed judgment that a vehicle or engine is certifiable or is covered by a certificate can properly be based on that data. It is the responsibility of the manufacturer to locate its testing and manufacturing facilities in jurisdictions where this situation will not arise.

(g) For purposes of this section:

(1) *Presentation of credentials* shall mean display of the document designating a person as an EPA Enforcement Officer.

(2) Where vehicle, component, or engine storage areas or facilities are concerned, *operating hours* shall mean all times during which personnel other than custodial personnel are at work in the vicinity of the area or facility and have access to it.

(3) Where facilities or areas other than those covered by paragraph (g)(2) of this section are concerned, *operating hours* shall mean all times during which an assembly line is in operation or all times during which testing, maintenance, service accumulation, production or compilation of records, or any other procedure or activity related to certification testing, to translation of designs from the test stage to the production stage, or to vehicle manufacture or assembly is being carried out in a facility.

(4) *Reasonable assistance* includes, but is not limited to, clerical, copying, interpretation and translation services, the making available on request of personnel of the facility being inspected during their working hours to inform the EPA Enforcement Officer of how the facility operates and to answer his questions, and the performance on request of emissions tests on any vehicle which is being, has been, or will be used for certification testing. Such tests shall be nondestructive, but may require appropriate service accumulation. A manufacturer may be compelled to cause the personal appearance of any employee at such a facility before an EPA Enforcement Officer by written request for his appearance, signed by the Assistant Administrator for Enforcement, served on the manufacturer. Any such employee who has been instructed by the manufacturer to appear will be entitled to be accompanied, represented, and advised by counsel. No counsel who accompanies, represents, or advises an employee compelled to appear may accompany, represent, or advise any other person in the investigation.

(5) Any entry without 24 hours prior written or oral notification to the affected manufacturer shall be authorized in writing by the Assistant Administrator for Enforcement.

§ 86.442–78 Denial, revocation, or suspension of certification.

(a) Notwithstanding the fact that any certification vehicle(s) may comply with other provisions of this subpart, the Administrator may withhold or deny the issuance of a certificate of conformity (or suspend or revoke any such certificate which has been issued) with respect to any such vehicle(s) if:

(1) The manufacturer submits false or incomplete information in his application for certification thereof; or

(2) The manufacturer renders inaccurate or invalid any test data which he submits pertaining thereto or otherwise circumvents the intent of the Act or of this subpart with respect to such vehicle; or

(3) Any EPA Enforcement Officer is denied access on the terms specified in § 86.441 to any facility or portion thereof which contains any of the following:

(i) The vehicle, or

(ii) Any components used or considered for use in its modification or build-up into a certification vehicle, or

(iii) Any production vehicle which is or will be claimed by the manufacturer to be covered by the certificate, or

(iv) Any step in the construction of a vehicle described in paragraph (c) of this section, or

(v) Any records, documents, reports, or histories required by this part to be kept concerning any of the above.

(4) Any EPA Enforcement Officer is denied ''reasonable assistance'' (as defined in § 86.444) in examining any of the items listed in paragraph (a)(1)(iii) of this section.

(b) The sanctions of withholding, denying, revoking, or suspending of a certificate may be imposed for the reasons in paragraph (a) of this section only when the infraction is substantial.

(c) In any case in which a manufacturer knowingly submits false or inaccurate information, or knowingly renders inaccurate or invalid any test data, or commits any fraudulent acts and such acts contribute substantially to the Administrator's decision to issue a certificate of conformity, the Administrator may deem such certificate void ab initio.

(d) In any case in which certification of a vehicle is proposed to be withheld, denied, revoked, or suspended under paragraph (a) (3) or (4) of this section, and in which the Administrator has presented to the manufacturer involved reasonable evidence that a violation of § 86.441 in fact occurred, the manufacturer, if the wishes to contend that, even though the violation occurred, the vehicle in question was not involved in the violation to a degree that would warrant withholding, denial, revocation, or suspension of certification under either paragraph (a) (3) or (4) of this section, shall have the burden of establishing that contention to the satisfaction of the Administrator.

(e) Any revocation or suspension of certification under paragraph (a) of this section shall:

(1) Be made only after the manufacturer concerned has been offered an opportunity for a hearing conducted in accordance with § 86.444 hereof.

(2) Extend no further than to forbid the introduction into commerce of vehicles previously covered by the certification which are still in the hands of the manufacturer, except in cases of such fraud or other misconduct as makes the certification invalid ab initio.

(f) The manufacturer may request in the form and manner specified in § 86.443 that any determination made by the Administrator under paragraph (a) of this section to withhold or deny certification be reviewed in a hearing conducted in accordance with § 86.444. If the Administrator finds, after a review of the request and supporting data, that the request raises a substantial factual issue, he will grant the request with respect to such issue.

[42 FR 1126, Jan. 5, 1977, as amended at 42 FR 56738, Oct. 28, 1977]

§ 86.443–78 Request for hearing.

Within 30 days following receipt of notification that an application has been rejected or that certification has been denied, the manufacturer may request a hearing on the Administrator's determination. The request shall be in

writing, signed by an authorized representative of the manufacturer and shall include a statement specifying the manufacturer's objections to the Administrator's determinations, and data in support of such objections. If, after the review of the request and supporting data, the Administrator finds that the request raises a substantial factual issue, he shall provide the manufacturer a hearing with respect to such issue.

§86.444–78 Hearings on certification.

(a)(1) After granting a request for a hearing under §86.443 the Administrator will designate a Presiding Officer for the hearing.

(2) The General Counsel will represent the Environmental Protection Agency in any hearing under this section.

(3) If a time and place for the hearing have not been fixed by the Administrator under §86.443, the hearing shall be held as soon as practicable at a time and place fixed by the Administrator or by the Presiding Officer.

(4) In the case of any hearing requested pursuant to §86.437, the Administrator may in his discretion direct that all argument and presentation of evidence be concluded within such fixed period not less than 30 days as he may establish from the date that the first written offer of a hearing is made to the manufacturer. To expedite proceedings, the Administrator may direct that the decision of the Presiding Officer (who may, but need not be the Administrator himself) shall be the final EPA decision.

(b)(1) Upon his appointment pursuant to paragraph (a) of this section, the Presiding Officer will establish a hearing file. The file shall consist of the notice issue by the Administrator under a hearing and the supporting data submitted therewith and all documents relating to the request for certification and all documents submitted therewith, and correspondence and other data material to the hearing.

(2) The appeal file will be available for inspection by the applicant at the office of the Presiding Officer.

(c) An applicant may appear in person, or may be represented by counsel or by any other duly authorized representative.

(d)(1) The Presiding Officer upon the request of any party, or in his discretion, may arrange for a prehearing conference at a time and place specified by him to consider the following:

(i) Simplification of the issues;

(ii) Stipulations, admissions of fact, and the introduction of documents;

(iii) Limitation of the number of expert witnesses;

(iv) Possibility of agreement disposing of all or any of the issues in dispute;

(v) Such other matters as may aid in the disposition of the hearing, including such additional tests as may be agreed upon by the parties.

(2) The results of the conference shall be reduced to writing by the Presiding Officer and made part of the record.

(e)(1) Hearings shall be conducted by the Presiding Officer in an informal but orderly and expeditious manner. The parties may offer oral or written evidence, subject to the exclusion by the Presiding Officer of irrevelant, immaterial, and repetitious evidence.

(2) Witnesses will not be required to testify under oath. However, the Presiding Officer shall call to the attention of witnesses that their statements may be subject to the provisions of title 18 U.S.C. 1001 which imposes penalties for knowingly making false statements or representations, or using false documents in any matter within the jurisdiction of any department or agency of the United States.

(3) Any witness may be examined or cross-examined by the Presiding Officer, the parties, or their representatives.

(4) Hearings shall be reported verbatim. Copies of transcripts of proceedings may be purchased by the applicant from the reporter.

(5) All written statements, charts, tabulations, and similar data offered in evidence at the hearing shall, upon a showing satisfactory to the Presiding Officer of their authenticity, relevancy, and materiality, be received in evidence and shall constitute a part of the record.

(6) Oral argument may be permitted in the discretion of the Presiding Officer and shall be reported as part of the

record unless otherwise ordered by him.

(f)(1) The Presiding Officer shall make an initial decision which shall include written findings and conclusions and the reasons or basis therefore on all the material issues of fact, law, or discretion presented on the record. The findings, conclusions, and written decision shall be provided to the parties and made a part of the record. The initial decision shall become the decision of the Administrator without further proceedings unless there is an appeal to the Administrator or motion for review by the Administrator within 20 days of the date the initial decision was filed.

(2) On appeal from or review of the initial decision the Administrator shall have all the powers which he would have in making the initial decision including the discretion to require or allow briefs, oral argument, the taking of additional evidence or the remanding to the Presiding Officer for additional proceedings. The decision by the Administrator shall include written findings and conclusions and the reasons or basis therefore on all the material issues of fact, law, or discretion presented on the appeal or considered in the review.

Subpart F—Emission Regulations for 1978 and Later New Motorcycles; Test Procedures

SOURCE: 42 FR 1137, Jan. 5, 1977, unless otherwise noted.

§ 86.501–78 Applicability.

(a) This subpart contains the motorcycle test procedures specified in subpart E.

(b) Provisions of this subpart apply to tests performed by both the Administrator and motor vehicle manufacturers.

§ 86.502–78 Definitions.

(a) The definitions in § 86.402–78 apply to this subpart.

(b) [Reserved]

§ 86.503–78 Abbreviations.

(a) The abbreviations in § 86.403–78 apply to this subpart.

(b) [Reserved]

§ 86.504–78 Section numbering.

(a) The section numbering system described in § 86.404–78 is used in this subpart.

(b) [Reserved]

§ 86.505–78 Introduction; structure of subpart.

(a) This subpart describes the equipment required and the procedures to follow in order to perform exhaust emission tests on motorcycles. Subpart E sets forth the testing requirements and test intervals necessary to comply with EPA certification procedures.

(b) Three topics are addressed in this subpart. Sections 86.508 through 86.515 set forth specifications and equipment requirements; §§ 86.516 through 86.526 discuss calibration methods and frequency; test procedures and data requirements are listed (in approximate order of performance) in §§ 86.527 through 86.544.

§ 86.508–78 Dynamometer.

(a) The dynamometer shall have a single roll with a diameter of at least 0.400 metre.

(b) The dynamometer shall be equipped with a roll revolution counter for measuring actual distance traveled.

(c) Flywheels or other means shall be used to stimulate the inertia specified in § 86.529.

(d) A variable speed cooling blower shall direct air to the vehicle. The blower outlet shall be at least 0.40 m^2 (4.31 ft^2) and shall be squarely positioned between 0.3 m (0.98 ft) and 0.45 m (1.48 ft) in front of the vehicle's front wheel. The velocity of the air at the blower outlet shall be within the following limits (as a function of roll speed):

Actual roll speed	Allowable cooling air speed
0 km/h to 5 km/h	0 km/h to 10 km/h.
5 km/h to 10 km/h	0 km/h to roll speed + 5 km/h.
10 km/h to 50 km/h	Roll speed ± 5 km/h.
50 km/h to 70 km/h	Roll speed ± 10 pct.
Above 70 km/h	At least 63 km/h.

(e) The dynamometer shall comply with the tolerances in § 86.529.

[42 FR 1137, Jan. 5, 1977, as amended at 42 FR 56738, Oct. 28, 1977]

§86.509–90 Exhaust gas sampling system.

(a)(1) *General.* The exhaust gas sampling system is designed to measure the true mass emissions of vehicle exhaust. In the CVS concept of measuring mass emissions, two conditions must be satisfied: the total volume of the mixture of exhaust and dilution air must be measured and a continuously proportioned volume of sample must be collected for analysis. Mass emissions are determined from the sample concentration and totalized flow over the test period.

(2) *Vehicle tailpipe to CVS duct.* For methanol fueled vehicles, cooling of the exhaust gases in the duct connecting the vehicle tailpipe to the CVS shall be minimized. This may be accomplished by:

(i) Using a duct of unrestricted length maintained at a temperature above the maximum dew point of the exhaust, but below 121 °C (250 °F); heating and possibly cooling capabilities are required; or

(ii) Using a short duct (up to 12 feet long) constructed of smooth wall pipe with a minimum of flexible sections, maintained at a temperature above the maximum dew point of the exhaust, but below 121 °C (250 °F), prior to the test and during any breaks in the test and uninsulated during the test (insulation may remain in place and/or heating may occur during testing provided maximum temperature is not exceeded); or

(iii) Using smooth wall duct less than five feet long with no required heating. A maximum of two short flexible connectors are allowed under this option; or

(iv) Omitting the duct and performing the exhaust gas dilution function at the motorcycle tailpipe exit.

(3) *Positive displacement pump.* The Positive Displacement Pump-Constant Volume Sampler (PDP–CVS), Figure F90–1 satisfies the first condition by metering at a constant temperature and pressure through the pump. The total volume is measured by counting the revolutions made by the calibrated positive displacement pump. The proportional samples are achieved by sampling at a constant flow rate. For methanol-fueled motorcycle sample lines for the methanol and formaldehyde samples are heated to prevent condensation. The temperature of the sample lines shall be more than 3 °C (5 °F) above the maximum dew point of the sample, but below 121 °C (250 °F). (Note: For 1990 through 1994 model year methanol-fueled motorcycles, methanol and formaldehyde sampling may be omitted provided the bag sample (hydrocarbons and methanol) is analyzed using a HFID calibrated with methanol.)

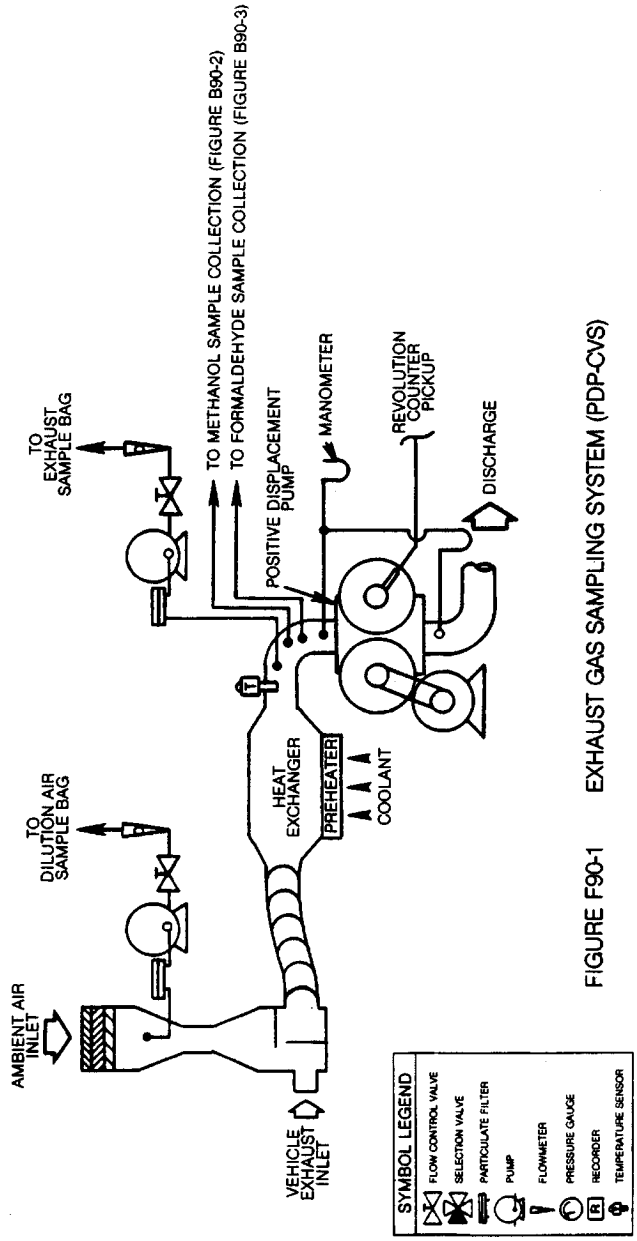

FIGURE F90-1 EXHAUST GAS SAMPLING SYSTEM (PDP-CVS)

(4) *Critical flow venturi.* The operation of the Critical Flow Venturi—Constant Volume Sampler (CFV–CVS) sample system, Figure F90–2, is based upon the principles of fluid dynamics associated with critical flow. Proportional sampling throughout temperature excursions is maintained by use of small

CFVs in the sample lines, which respond to the varying temperatures in the same manner as the main CFV. For methanol-fueled motorcycles, the methanol and formaldehyde sample lines are heated to prevent condensation. The temperature of the sample lines shall be more than 3 °C (5 °F) above the maximum dew point of the sample, but below 121 °C (250 °F). Care must be taken to ensure that the CFVs of the sample probes are not heated since heating of the CFVs would cause loss of proportionality. (Note: For 1990 through 1994 model year methanol-fueled motorcycles, methanol and formaldehyde sampling may be omitted provided the bag sample (hydrocarbons and methanol) is analyzed using a HFID calibrated with methanol.) Total flow per test is determined by continuously computing and integrating instantaneous flow. A low response time temperature sensor is necessary for accurate flow calculation.

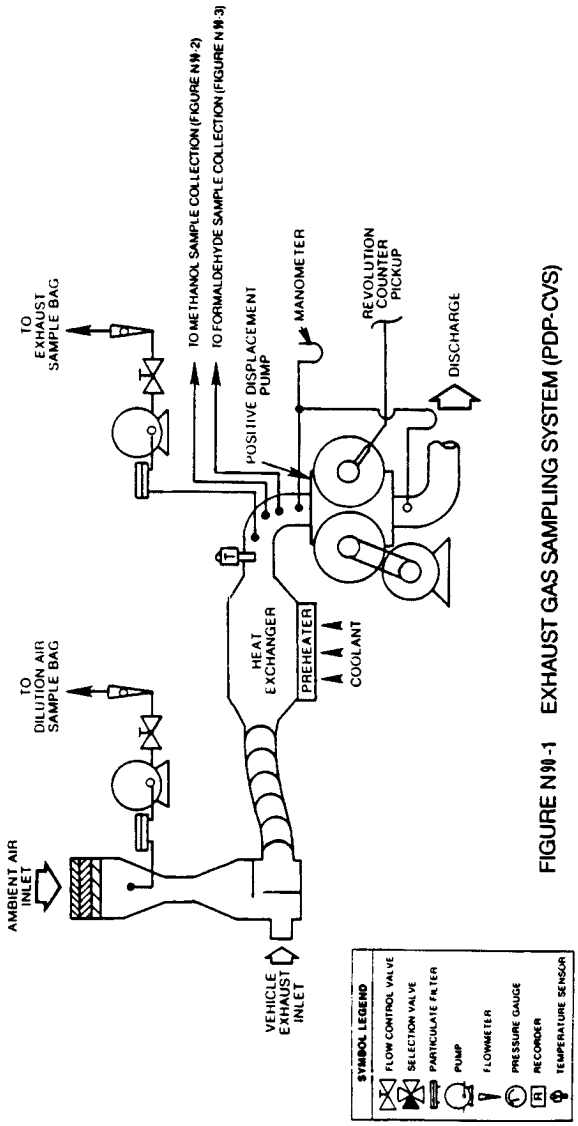

FIGURE N9-1 EXHAUST GAS SAMPLING SYSTEM (PDP-CVS)

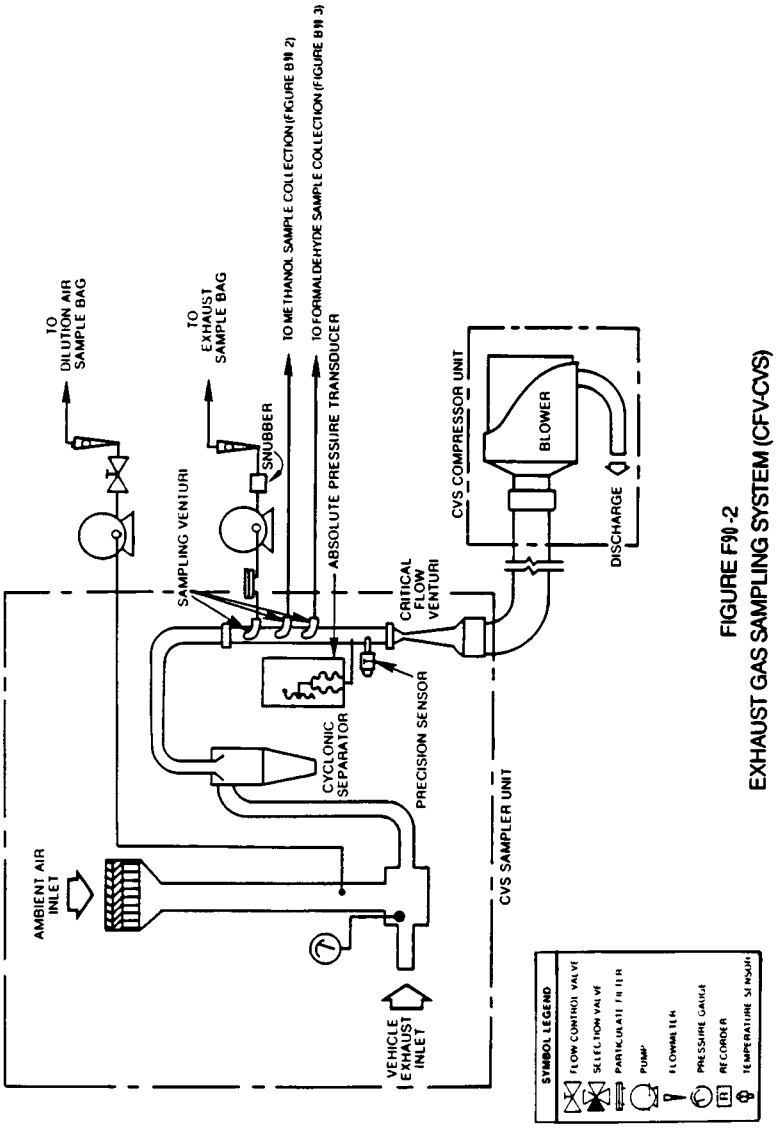

FIGURE F90-2
EXHAUST GAS SAMPLING SYSTEM (CFV-CVS)

(5) *Electronic Flow Control.* The Critical Flow Venturi—Electronic Flow Control—Constant Volume Sampler (CFV–EFC–CVS) system is identical to the CFV–CVS system described in paragraphs (a)(4) and (c) of this section, except that it maintains proportional sampling for methanol and formaldehyde by measuring the CVS flow rate, and electronically controlling sample flow rates. It is recommended that sample volumes be measured by separate flow meters. For methanol-fueled motorcycles, the samples lines for the methanol and formaldehyde samples are heated to prevent condensation. The temperature of the sample lines shall be more than 20 °F (11 °C) above

the maximum dew point of the sample, but below 121 °C (250 °F).

(6) *Other systems.* Other sampling systems may be used if shown to yield equivalent results, and if approved in advance by the Administrator (*e.g.*, a heat exchanger with the CFV–CVS or an electronic flow integrator without a heat exchanger, with the PDP–CVS).

(b) *Component description, PDP-CVS.* The PDP–CVS, Figure F90–1, consists of a dilution air filter and mixing assembly, heat exchanger, positive displacement pump, sampling systems including, probes and sampling lines which, in the case of the methanol-fueled motorcycles, are heated to prevent condensation (heating of the sample lines may be omitted, provided the methanol and formaldehyde sample collection systems are close coupled to the probes thereby preventing loss of sample due to cooling and resulting condensation in the sample lines), and associated valves, pressure and temperature sensors. The PDP–CVS shall conform to the following requirements:

(1) Static pressure variations at the tailpipe(s) of the vehicle shall remain within ±1.25 kPa (±5.02 in H_2O) of the static pressure variations measured during a dynamometer driving cycle with no connection to the tailpipe(s). (Sampling systems capable of maintaining the static pressure to within ±0.25 kPa (±1.00 in. H_2O) will be used by the Administrator if a written request substantiates the need for this closer tolerance.)

(2) The gas mixture temperature, measured at a point immediately ahead of the positive displacement pump, shall be within ±5 °C (9 °F) of the designed operating temperature at the start of the test. The gas mixture temperature variation from its value at the start of the test shall be limited to ±5 °C (9 °F) during the entire test. The temperature measuring system shall have an accuracy and precision of ±1 °C (1.8 °F).

(3) The pressure gauges shall have an accuracy and precision of ±0.4 kPa (±3 mm Hg).

(4) The location of the dilution air inlet shall be placed so as to use test-cell air for dilution and the flow capacity of the CVS shall be large enough to completely eliminate water condensation in the dilution and sampling systems. Control of water condensation with methanol-fueled vehicles is critical. Additional care may also be required to eliminate water condensation when testing natural gas and liquefied petroleum gas-fueled vehicles. (Procedures for determining CVS flow rates are detailed in ''Calculation of Emissions and Fuel Economy When Using Alternative Fuels,'' EPA 460/3–83–009.) Dehumidifying the dilution air before entering the CVS is allowed. Heating the dilution air is also allowed, provided:

(i) The air (or air plus exhaust gas) temperature does not exceed 121 °C (250 °F).

(ii) Calculation of the CVS flow rate necessary to prevent water condensation is based on the lowest temperature encountered in the CVS prior to sampling. (It is recommended that the CVS system be insulated when heated dilution air is used.)

(iii) The dilution ratio is sufficiently high to prevent condensation in bag samples as they cool to room temperature.

(5) Sample collection bags for dilution air and exhaust samples (hydrocarbons and carbon monoide) shall be of sufficient size so as not to impede sample flow. A single dilution air sample, covering the total test period, may be collected for the determination of methanol and formaldehyde background (methanol-fueled motorcycles).

(6) The methanol sample collection system and the formaldehyde sample collection system shall each be of sufficient capacity so as to collect samples of adequate size for analysis without significant impact on the volume of dilute exhaust passing through the PDP. The systems shall also comply with the following requirements that apply to the design of the systems, not to individual tests:

(i) The methanol system shall be designed such that if a test motorcycle continuously emitted the maximum allowable level of methanol (based on all applicable standards) the measured concentration in the primary impinger would exceed either 25 mg/l or a concentration equal to 25 times the limit of detection for the GC analyzer.

(ii) The formaldehyde system shall be designed such that if a test motorcycle continuously emitted formaldehyde at a rate equal to twenty percent of the maximum allowable level of THCE (*i.e.*, 1.0 g/km for a 5.0 g/km standard), or the maximum formaldehyde level allowed by a specific formaldehyde standard, whichever is less, the concentration of formaldehyde in the DNPH solution of the primary impinger, or solution resulting from the extraction of the DNPH cartridge, shall exceed either 2.5 mg/l or a concentration equal to 25 times the limit of detection for the HPLC analyzer.

(iii) The methanol and formaldehyde systems shall be designed such that the primary impinger collects at least 90 percent of the analyte in the samples. The remaining analyte shall be collected by the secondary impinger. This requirement does not apply to dilution air samples, since they do not require secondary impingers, or to samples in which the concentrations approach the limit of detection.

(c) *Component description, CFV–CVS.* The CFV–CVS sample system, Figure F90–2, consists of a dilution air filter and mixing assembly, a cyclone particulate separator, unheated sampling venturies for the bag samples, and for the methanol and formaldehyde samples from methanol-fueled vehicles, samples lines heated to prevent condensation for the methanol and formaldehyde samples from methanol fueled vehicles (heating of the sample lines may be omitted provided, the methanol and formaldehyde sample collection systems are close coupled to the probes thereby preventing loss of sample due to cooling and resulting condensation in the sample lines), a critical flow venturi, and assorted valves, and pressure and temperature sensors. The CFV sample system shall conform to the following requirements:

(1) Static pressure variations at the tailpipe(s) of the vehicle shall remain within ±1.25 kPa (5.02 in H_2O) of the static pressure variations measured during a dynamometer driving cycle with no connection to the tailpipe(s). (Sampling systems capable of maintaining the static pressure to within ±0.25 kPa (1.00 in H_2O) will be used by the Administrator if a written request substantiates the need for this closer tolerance.)

(2) The temperature measuring system shall have an accuracy and precision of ±1 °C (1.8 °F) and a response time of 0.100 second to 62.5 percent of a temperature change (as measured in hot silicone oil).

(3) The pressure measuring system shall have an accuracy and precision of ±0.4 kPa (±3 mm Hg).

(4) The location of the dilution air inlet shall be placed so as to use test-cell air for dilution and the flow capacity of the CVS shall be large enough to completely eliminate water condensation in the dilution and sampling systems. Control of water condensation with methanol-fueled vehicles is critical. Additional care may also be required to eliminate water condensation when testing natural gas and liquefied petroleum gas-fueled vehicles. (Procedures for determining CVS flow rates are detailed in ''Calculation of Emissions and Fuel Economy When Using Alternative Fuels,'' EPA 460/3–83–009.) Dehumidifying the dilution air before entering the CVS is allowed. Heating the dilution air is also allowed, provided:

(i) The air (or air plus exhaust gas) temperature does not exceed 250 °F.

(ii) Calculation of the CVS flow rate necessary to prevent water condensation is based on the lowest temperature encountered in the CVS prior to sampling. (It is recommended that the CVS system be insulated when heated dilution air is used.)

(iii) The dilution ratio is sufficiently high to prevent condensation in bag samples as they cool to room temperature.

(5) Sample collection bags for dilution air and exhaust samples (hydrocarbons and carbon monoxide) shall be of sufficient size so as not to impede sample flow. A single dilution air sample, covering the total test period, may be collected for the determination of methanol and formaldehyde background (methanol-fueled motorcycles).

(6) The methanol sample collection system and the formaldehyde sample collection system shall each be of sufficient capacity so as to collect samples of adequate size for analysis without

significant impact on the volume of dilute exhaust passing through the CVS. The systems shall also comply with the following requirements that apply to the design of the systems, not to individual tests:

(i) The methanol system shall be designed such that if a test motorcycle continuously emitted the maximum allowable level of methanol (based on all applicable standards) the measured concentration in the primary impinger would exceed either 25 mg/l or a concentration equal to 25 times the limit of detection for the GC analyzer.

(ii) The formaldehyde system shall be designed such that if a test motorcycle continuously emitted formaldehyde at a rate equal to twenty percent of the maximum allowable level of THCE (*i.e.*, 1.0 g/km for a 5.0 g/km standard), or the maximum formaldehyde level allowed by a specific formaldehyde standard, whichever is less, the concentration of formaldehyde in the DNPH solution of the primary impinger, or solution resulting from the extraction of the DNPH cartridge, shall exceed either 2.5 mg/l or a concentration equal to 25 times the limit of detection for the HPLC analyzer.

(iii) The methanol and formaldehyde systems shall be designed such that the primary impinger collects at least 90 percent of the analyte in the samples. The remaining analyte shall be collected by the secondary impinger. This requirement does not apply to dilution air samples, since they do not require secondary impingers, or to samples in which the concentrations approach the limit of detection.

(d) *Component description, CFV–EFC–CVS.* The CVS sample system is identical to the system described in paragraph (c) of this section, plus includes a means of electronically measuring the CVS flow rate, and electronic mass flow controllers for the methanol and formaldehyde sample lines, and separate flow meters to totalize sample flow volumes (optional). The EFC sample system shall conform to all of the requirements listed in paragraph (c) of this section, except that the methanol and formaldehyde samples mat both be drawn from a single static probe. It also must comply with the following additional requirements:

(1) The ratio of the CVS flow rate to the sample flow rate shall not deviate from the ratio at the start of the test by more than ±5 percent. (The volumetric sample flow rate shall be varied inversely with the square root of the bulk stream temperature.)

(2) Flow totalizers for methanol and/or formaldehyde samples shall have an accuracy of ±2 percent. Total sample volumes may be obtained from the flow controllers, with the advance approval of the administrator, provided that the controllers can be shown to have an accuracy of ±2 percent.

[54 FR 14539, Apr. 11, 1989, as amended at 59 FR 48512, Sept. 21, 1994; 60 FR 34351, June 30, 1995]

§ 86.511–90 Exhaust gas analytical system.

(a) *Schematic drawings.* Figure F90–3 is a schematic drawing of the exhaust gas analytical system for analysis of hydrocarbons (HC) (hydrocarbons plus methanol in the case of methanol-fueled motorcycles), carbon monoxide (CO), carbon dioxide (CO_2), and oxides of nitrogen (NO_X). Since various configurations can produce accurate results, exact conformance with the drawing is not required. Additional components such as instruments, valves, solenoids, pumps and switches may be used to provide additional information and coordinate the functions of the component systems

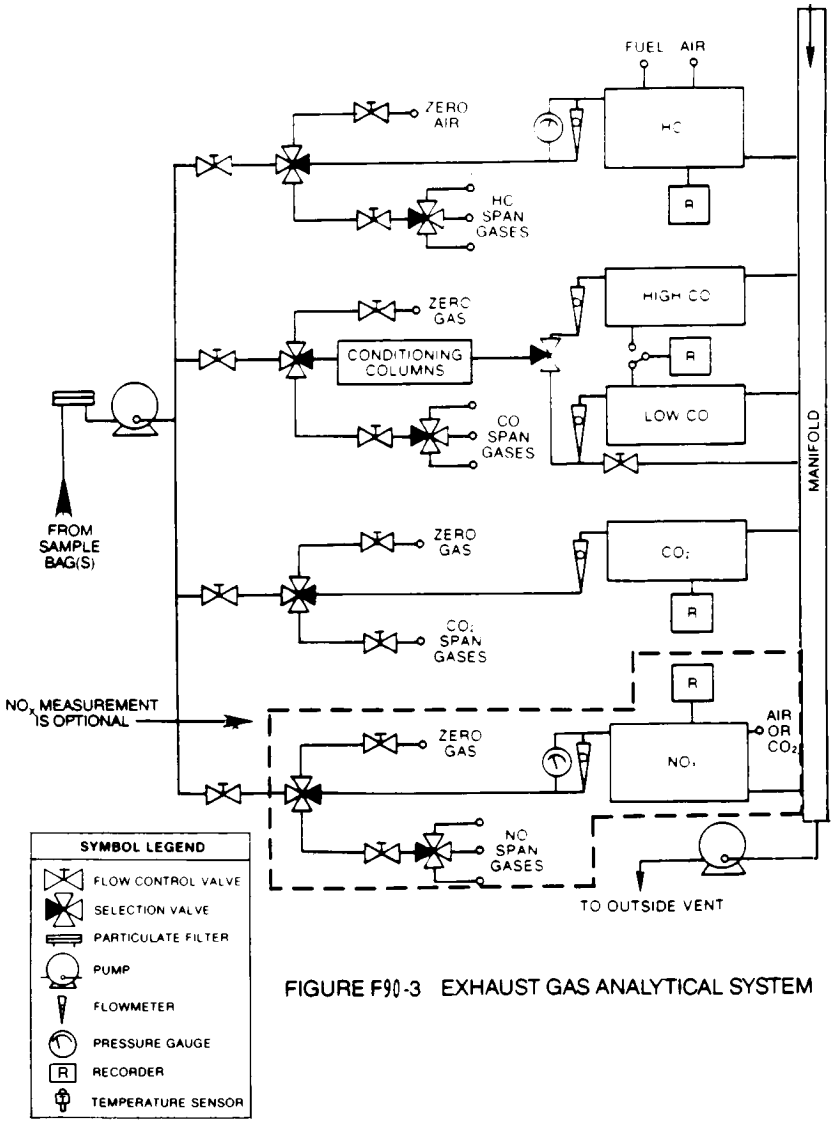

FIGURE F90-3 EXHAUST GAS ANALYTICAL SYSTEM

(b) *Major component description.* The exhaust gas analytical system for HC, CO and CO_2, Figure F90–3, consists of a flame ionization detector (FID) (heated (235°±15 °C (113°±8 °C)) for methanol-fueled vehicles) for the determination of hydrocarbons, nondispersive infrared analyzers (NDIR) for the determination of carbon monoxide and carbon dioxide and, if oxides of nitrogen are measured, a chemiluminescence analyzer (CL) for the determination of oxides of nitrogen. The analytical system for methanol consists of a gas chromatograph (GC) equipped with a flame ionization detector. The analysis for formaldehyde is performed using high pressure liquid chromatography (HPLC) of 2,4-

dinitrophenylhydrazine (DNPH) derivatives using ultraviolet (UV) detection. The exhaust gas analytical system shall conform to the following requirements:

(1) The CL requires that the nitrogen dioxide present in the sample be converted to nitric oxide before analysis. Other types of analyzers may be used if shown to yield equivalent results and if approved in advance by the Administrator.

(2) The carbon monoxide (CO) NDIR analyzer may require a sample conditioning column containing $CaSO_4$, or indicating silica gel to remove water vapor and containing ascarite to remove carbon dioxide from the CO analysis stream.

(i) If CO instruments which are essentially free of CO_2 and water vapor interference are used, the use of the conditioning column may be deleted, see §§ 86.522 and 86.544.

(ii) A CO instrument will be considered to be essentially free of CO_2 and water vapor interference if its response to a mixture of 3 percent CO_2 in N_2 which has been bubbled through water at room temperature produces an equivalent CO response, as measured on the most sensitive CO range, which is less than 1 percent of full scale CO concentration on ranges above 300 ppm full scale or less than 3 ppm on ranges below 300 ppm full scale; *see* § 86.522.

(c) *Other analyzers and equipment.* Other types of analyzers and equipment may be used if shown to yield equivalent results and if approved in advance by the Administrator.

[54 FR 14544, Apr. 11, 1989]

§ 86.513–87 Fuel and engine lubricant specifications.

(a) Gasoline having the following specifications will be used by the Administrator in exhaust emission testing. Gasoline having the following specifications or substantially equivalent specifications approved by the Administrator, shall be used by the manufacturer for emission testing except that the lead and octane specifications do not apply.

Item designation	ASTM	Leaded	Unleaded
Octane, research, min	D2699	100	93
Pb (organic), g/liter (g/U.S. gal.)	D3237	[1] 0.026 (0.100 max)	[1] 0.013 (0.050 max)
Distillation Range:	D86.		
IBP, °C (°F)		23.9–35 (75–95)	23.9–35 (75–95)
10 pct. point, °C (°F)		48.9–57.2 (120–135)	48.9–57.2 (120–135)
50 pct. point, °C (°F)		93.3–110 (200–230)	93.3–110 (200–230)
90 pct. point, °C (°F)		148.9–162.8 (300–325)	148.9–162.8 (300–325)
EP, °C (°F)		212.8(415)	212.8(415)
Sulfur, wt. pct., max	D1266	0.10	0.10
Phosphorus, g/liter (g/U.S. gal), max		0.0026 (0.01)	0.0013 (0.005)
RVP, KPa (psi)	D323	55.2–63.4 (8.0–9.2)	55.2–63.4 (8.0–9.2)
Hydrocarbon composition:			
Olefins, pct., max	D1319	10	10
Aromatics, pct., max		35	35
Saturates		(2)	(2)

[1] Maximum.
[2] Remainder.

(b)(1) Gasoline and engine lubricants representative of commercial fuels and engine lubricants which will be generally available through retail outlets shall be used in service accumulation.

(2) For leaded fuel the lead content shall not exceed 0.100 gram lead per gallon leaded gasoline.

(3) Where the Administrator determines that vehicles represented by a test vehicle will be operated using gasoline of different lead content than that prescribed in this paragraph, he may consent in writing to use a gasoline with a different lead content.

(4) The octane rating of the gasoline used shall be no higher than 4.0 research octane numbers above the minimum recommended by the manufacturer.

(5) The Reid Vapor Pressure of the fuel used shall be characteristic of the motor fuel during the season in which the service accumulation takes place.

(6) If the manufacturer specifies several lubricants to be used by the ultimate purchaser, the Administrator will select one to be used during service accumulation.

(c) The specification range of the fuels and engine lubricants to be used under paragraph (b) of this section shall be reported in accordance with § 86.416.

(d) The same lubricant(s) shall be used for both service accumulation and emission testing.

(e) Fuels not meeting the specifications set forth in this section may be used only with the advance approval of the Administrator.

[51 FR 24611, July 7, 1986, as amended at 52 FR 47869, Dec. 16, 1987]

§ 86.513–90 Fuel and engine lubricant specifications.

(a) Gasoline having the following specifications will be used by the Administrator in exhaust emission testing. Gasoline having the following specifications or substantially equivalent specifications approved by the Administrator, shall be used by the manufacturer for emission testing except that the octane specifications do not apply.

Item	ASTM	Value
Octane, research, minimum	D2699	96
Lead (organic):		
g/liter	D3237	[1] 0.013
(g/U.S. gal.)	.....	[1] (0.050)
Distillation range:		
IBP:		
°C	D86	23.9–35
(°F)	.....	(75–95)
10 pct. point:		
°C	D86	48.9–57.2
(°F)	.....	(120–135)
50 pct. point:		
°C	D86	93.3–110
(°F)	.....	(200–230)
90 pct. point:		
°C	D86	148.9–162.8
(°F)	.....	(300–325)
EP:		
°C max	D86	212.8
(°F)	.....	(415)
Sulfur, weight percent, maximum	D1266	0.10
Phosphorus:		
g/liter, max	D3231	0.0013
(g/U.S. gal)	.....	(0.005)
RVP, kPa (psi)	D323	55.2–63.4 (8.0–9.2)
Hydrocarbon composition:		
Olefins, percent, maximum	D1319	10
Aromatics, percent, maximum	D1319	35
Saturates	D1319	Remainder

[1] Maximum.

(b)(1) Unleaded gasoline and engine lubricants representative of commercial fuels and engine lubricants which will be generally available through retail outlets shall be used in service accumulation.

(2) The octane rating of the gasoline used shall be no higher than 4.0 Research octane numbers above the minimum recommended by the manufacturer.

(3) The Reid Vapor Pressure of the fuel used shall be characteristic of the motor fuel during the season in which the service accumulation takes place.

(4) If the manufacturer specifies several lubricants to be used by the ultimate purchaser, the Administrator will select one to be used during service accumulation.

(c) Methanol fuel used for exhaust and evaporative emission testing and in service accumulation of methanol-fueled motorcycle vehicles shall be representative of commercially available methanol fuel and shall consist of at least 50 percent methanol by volume.

(1) Manufacturers shall recommend the methanol fuel to be used for testing and service accumulation in accordance with paragraph (c).

(2) The Administrator shall determine the methanol fuel to be used for testing and service accumulation.

(d) Other methanol fuels may be used for testing and service accumulation provided:

(1) They are commercially available, and

(2) Information, acceptable to the Administrator, is provided to show that only the designated fuel would be used in customer service, and

(3) Use of a fuel listed under paragraph (a)(3) of this section would have a detrimental effect on emissions or durability, and

(4) Written approval from the Administrator of the fuel specifications must be provided prior to the start of testing.

(e) The specification range of the fuels and engine lubricants to be used under paragraph (b) of this section shall be reported in accordance with § 86.416.

(f) The same lubricant(s) shall be used for both service accumulation and emission testing.

(g) Fuels not meeting the specifications set forth in this section may be used only with the advance approval of the Administrator.

(h) *Mixtures of petroleum and methanol fuels for flexible fuel motorcycles.* (1) Mixtures of petroleum and methanol fuels used for exhaust and evaporative emission testing and service accumulation for flexible fuel motorcycles shall be within the range of fuel mixtures for which the vehicle was designed.

(2) Manufacturer testing and service accumulation may be performed using only those mixtures (mixtures may be different for exhaust testing, evaporative testing, and service accumulation) expected to result in the highest emissions, provided:

(i) The fuels which constitute the mixture will be used in customer service, and

(ii) Information, acceptable to the Administrator, is provided by the manufacturer to show that the designated fuel mixtures would result in the highest emissions, and

(iii) Written approval from the Administrator of the fuel specifications must be provided prior to the start of testing.

(3) The specification range of the fuels to be used under paragraph (h)(1) of this section shall be reported in accordance with § 86.090 21(b)(3).

[53 FR 476, Jan. 7, 1988, as amended at 54 FR 14546, Apr. 11, 1989]

§ 86.513–94 Fuel and engine lubricant specifications.

(a) *Gasoline.* (1) Gasoline having the following specifications will be used by the Administrator in exhaust emission testing of gasoline-fueled motorcycles. Gasoline having the following specifications or substantially equivalent specifications approved by the Administrator, shall be used by the manufacturer for emission testing except that the octane specifications do not apply.

Item	ASTM	Value
Octane, research, minimum	D2699	96
Lead (organic):		
g/liter (g/U.S. gal.)	D3237	[1]0.013 [1](0.050)
Distillation range:		
IBP: °C (°F)	D86	23.9–35 (75–95)
10 pct. point: °C (°F)	D86	48.9–57.2 (120–135)
50 pct. point: °C (°F)	D86	93.3–110 (200–230)
90 pct. point: °C (°F)	D86	148.9–162.8 (300–325)
EP: max. °C (°F)	D86	212.8 (415)
Sulfur, max. wt. %	D1266	0.10
Phosphorus: max. g/liter (g/U.S. gal.)	D3231	0.0013 (0.005)
RVP kPa (psi)	D323	55.2–63.4 (8.0–9.2)
Hydrocarbon composition:		
Olefins, max., %	D1319	10
Aromatics, max., %	D1319	35
Saturates	D1319	Remainder

[1] Maximum.

(2) Unleaded gasoline and engine lubricants representative of commercial fuels and engine lubricants which will be generally available through retail outlets shall be used in service accumulation.

(3) The octane rating of the gasoline used shall be no higher than 4.0 Research octane numbers above the minimum recommended by the manufacturer.

(4) The Reid Vapor Pressure of the gasoline used shall be characteristic of commercial gasoline fuel during the season in which the service accumulation takes place.

(b) *Methanol fuel.* (1) Methanol fuel used for exhaust and evaporative emission testing and in service accumulation of methanol-fueled motorcycles shall be representative of commercially available methanol fuel and shall consist of at least 50 percent methanol by volume.

(2) Manufacturers shall recommend the methanol fuel to be used for testing and service accumulation in accordance with paragraph (b)(1) of this section.

(3) The Administrator shall determine the methanol fuel to be used for testing and service accumulation.

(4) Other methanol fuels may be used for testing and service accumulation provided:

(i) They are commercially available; and

(ii) Information, acceptable to the Administrator, is provided to show that only the designated fuel would be used in customer service; and

(iii) Use of a fuel listed under paragraphs (b)(1), (b)(2) or (b)(3) of this section would have a detrimental effect on emissions or durability; and

(iv) Written approval from the Administrator of the fuel specifications must be provided prior to the start of testing.

(c) *Mixtures of petroleum and methanol fuels for flexible fuel motorcycles.* (1) Mixtures of petroleum and methanol fuels used for exhaust and evaporative emission testing and service accumulation for flexible fuel motorcycles shall consist of the petroleum fuel listed in paragraph (a) of this section and the methanol fuel listed in paragraph (b), and shall be within the range of fuel mixtures for which the vehicle was designed, as reported in accordance with § 86.90–21. The Administrator may use any fuel or fuel mixture within this range for testing.

(2) The fuel mixtures used by the manufacturers shall be sufficient to demonstrate compliance over the full design range, and shall include:

(i) For emission testing,

(A) The petroleum fuel specified in paragraph (a) or (b),

(B) A methanol fuel representative of the methanol fuel expected to the found in use, as specified in paragraph (b),

(ii) For service accumulation, an alternating combination of the fuels specified in paragraphs (a) and (b) will be used to demonstrate the durability of the emission control systems based on good engineering judgement. The combination shall be selected such that the cumulative volumes of both the methanol fuel and the petroleum fuel used shall be at least twenty-five percent of the total fuel volume. The fuels shall be alternated at mileage intervals not to exceed 1,000 kilometers.

(3) The specification range of the fuels to be used under paragraph (c) of this section shall be reported in accordance with § 86.094–21.

(d) *Natural gas-fuel.* (1) Natural gas-fuel having the following specifications will be used by the Administrator for exhaust and evaporative emission testing of natural gas-fueled motorcycles. Natural gas-fuel having the following specifications or substantially similar specifications approved by the Administrator, shall be used by the manufacturer for emission testing.

NATURAL GAS CERTIFICATION FUEL SPECIFICATIONS

Item		ASTM test method No.	Value
Methane	min. mole pct.	D1945	89.0
Ethane	max. mole pct.	D1945	4.5
C_3 and higher	max. mole pct.	D1945	2.3
C_6 and higher	max. mole pct.	D1945	0.2
Oxygen	max. mole pct.	D1945	0.6
Inert gases:			
Sum of CO_2 and N_2	max. mole pct.	D1945	4.0
Odorant [1]			

[1] The natural gas at ambient conditions must have a distinctive odor potent enough for its presence to be detected down to a concentration in air of not over 1/5 (one-fifth) of the lower limit of flammability.

(2) Natural gas-fuel and engine lubricants representative of commercial fuels and engine lubricants which will be generally available through retail outlets shall be used in service accumulation.

(3) Other natural gas-fuels may be used for testing and service accumulation provided:

(i) They are commercially available;

(ii) Information, acceptable to the Administrator, is provided to show that only the designated fuel would be used in customer service;

(iii) Written approval from the Administrator of the fuel specifications must be provided prior to the start of testing.

(e) *Liquefied petroleum gas-fuel.* (1) Liquefied petroleum gas-fuel used for exhaust and evaporative emission testing and in service accumulation of liquefied petroleum gas-fueled motorcycles shall be commercially available liquefied petroleum gas-fuel.

(2) Manufacturers shall recommend the liquefied petroleum gas-fuel to be used for testing and service accumulation in accordance with paragraph (e)(1) of this section.

(3) The Administrator shall determine the liquefied petroleum gas-fuel to be used for testing and service accumulation.

(4) Other liquefied petroleum gas-fuels may be used for testing and service accumulation provided:

(i) They are commercially available;

(ii) Information, acceptable to the Administrator, is provided to show that only the designated fuel would be used in customer service; and

(iii) Written approval from the Administrator of the fuel specifications must be provided prior to the start of testing.

(f) *Lubricants.* (1) If the manufacturer specifies several lubricants to be used by the ultimate purchaser, the Administrator will select one to be used during service accumulation.

(2) The same lubricant(s) shall be used for both service accumulation and emission testing.

(g) The specification range of the fuels and of the engine lubricants to be used under paragraphs (a), (b), (c), (d) and (e) of this section shall be reported in accordance with § 86.416.

(h) Written approval from the Administrator of the fuel and lubricant specifications must be provided prior to the start of testing.

[59 FR 48512, Sept. 21, 1994, as amended at 60 FR 34354, June 30, 1995]

§ 86.514–78 Analytical gases.

(a) *Analyzer gases.* (1) Gases for the CO and CO_2 analyzers shall be single blends of CO and CO_2 respectively using nitrogen as the diluent.

(2) Gases for the THC analyzer shall be:

(i) Single blends of propane using air as the diluent; and

(ii) Optionally, for response factor determination, single blends of methanol using air as the diluent.

(3) Gases for the NO_X analyzer shall be single blends of NO named as NO_X with a maximum NO_2 concentration of 5 percent of the nominal value using nitrogen as the diluent.

(4) [Reserved]

(5) The allowable zero gas (air or nitrogen) impurity concentrations shall not exceed 1 ppm equivalent carbon response, 1 ppm carbon monoxide, 0.04 percent (400 ppm) carbon dioxide, and 0.1 ppm nitric oxide.

(6) ''Zero grade air'' includes artificial ''air'' consisting of a blend of nitrogen and oxygen with oxygen concentrations between 18 and 21 mole percent.

(7) The use of proportioning and precision blending devices to obtain the required analyzer gas concentrations is allowable provided their use has been approved in advance by the Administrator.

(b) Calibration gases (not including methanol) shall be known to within 2 percent of true values.

(c) Methanol in air gases used for response factor determination shall:

(1) Be traceable to within ±2 percent of NIST (formerly NBS) gas standards, or other gas standards which have been approved by the Administrator; and

(2) Remain within ±2 percent of the labeled concentration. Demonstration of stability shall be based on a quarterly measurement procedure with a precision of ±2 percent (two standard deviations), or other method approved by the Administrator. The measurement procedure may incorporate multiple measurements. If the true concentration of the gas changes by more than two percent, but less than ten percent, the gas may be relabeled with the new concentration.

[42 FR 1137, Jan. 5, 1977, as amended at 60 FR 34354, June 30, 1995]

§ 86.515–78 EPA urban dynamometer driving schedule.

(a) The dynamometer driving schedules are listed in appendix I. The driving schedules are defined by a smooth trace drawn through the specified speed vs. time relationships. They consist of a nonrepetitive series of idle, acceleration, cruise, and deceleration modes of various time sequences and rates. Appropriate driving schedules are as follows:

Class I—Appendix I(c)
Class II—Appendix I(b)
Class III—Appendix I(b)

(b) The speed tolerance at any given time on the dynamometer driving schedule prescribed in appendix I or as printed on a driver's aid chart approved by the Administrator, when conducted

to meet the requirements of §86.537 is defined by upper and lower limits. The upper limit is 3.2 km/h (2 mph) higher than the highest point on the trace within 1 second of the given time. The lower limit is 3.2 km/h (2 mph) lower than the lowest point on the trace within 1 second of the given time. Speed variations greater than the tolerances (such as may occur during gear changes) are acceptable provided they occur for less than 2 seconds on any occasion. Speeds lower than those prescribed are acceptable provided the vehicle is operated at maximum available power during such occurrences. When conducted to meet the requirements of §86.532 the speed tolerance shall be as specified above, except that the upper and lower limits shall be 6.4 km/h (4 mph).

(c) Figure F78–4 shows the range of acceptable speed tolerances for typical points. Figure F78–4(a) is typical of portions of the speed curve which are increasing or decreasing throughout the two second time interval. Figure F78–4(b) is typical of portions of the speed curve which include a maximum or minimum value.

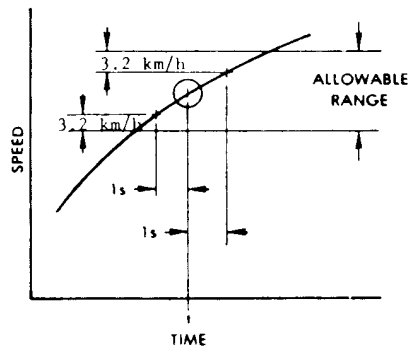

FIGURE F78-4a—DRIVERS TRACE, ALLOWABLE RANGE

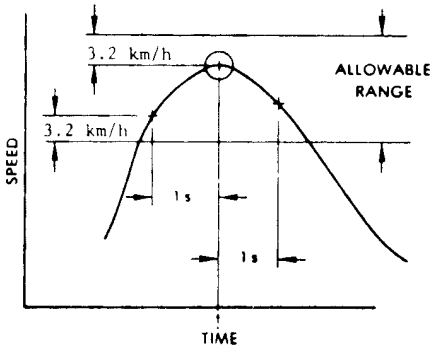

FIGURE F78-4b—DRIVERS TRACE, ALLOWABLE RANGE

§86.516–90 Calibrations, frequency and overview.

(a) Calibrations shall be performed as specified in §§86.517 through 86.526.

(b) [Reserved]

(c) At least monthly or after any maintenance which could alter calibration, the following calibrations and checks shall be performed:

(1) Calibrate the hydrocarbon analyzer, methane analyzer, carbon dioxide analyzer, carbon monoxide analyzer, and oxides of nitrogen analyzer (certain analyzers may require more frequent calibration depending on particular equipment and uses).

(2) Calibrate the dynamometer. If the dynamometer receives a weekly performance check (and remains within

calibration), the monthly calibration need not be performed.

(3) Check the oxides of nitrogen converter efficiency.

(d) At least weekly or after any maintenance which could alter calibration, the following calibrations and checks shall be performed:

(1) [Reserved]

(2) Perform a CVS system verification, and

(3) Run a performance check on the dynamometer. This check may be omitted if the dynamometer has been calibrated within the preceding month.

(e) The CVS positive displacement pump or Critical Flow Venturi shall be calibrated following initial installation, major maintenance or as necessary when indicated by the CVS system verification (described in § 86.519).

(f) Sample conditioning columns, if used in the CO analyzer train, should be checked at a frequency consistent with observed column life or when the indicator of the column packing begins to show deterioration.

[54 FR 14546, Apr. 11, 1989, as amended at 58 FR 58423, Nov. 1, 1993; 60 FR 34354, June 30, 1995]

§ 86.518–78 Dynamometer calibration.

(a) The dynamometer shall be calibrated at least once each month or performance verified at least once each week and then calibrated as required. The dynamometer is driven above the test speed range. The device used to drive the dynamometer is then disengaged from the dynamometer and the roll is allowed to coast down. The kinetic energy of the system is dissipated by the dynamometer. This method neglects the variations in roll bearing friction due to the drive axle weight of the vehicle.

(b) Calibration shall consist of coasting down the dynamometer for each inertia load combination used. Coastdown times for the interval from 70 to 60 km/h shall be within the tolerances specified in § 86.529. The dynamometer adjustments necessary to produce these results shall be noted for future reference.

(c) The performance check consists of conducting a dynamometer coastdown at one or more inertia-horsepower settings and comparing the coastdown time to the table in Figure F98–9 of § 86.529–98. If the coastdown time is outside the tolerance, a new calibration is required.

[42 FR 1137, Jan. 5, 1977, as amended at 63 FR 11849, Mar. 11, 1998]

§ 86.519–78 Constant volume sampler calibration.

The CVS (Constant Volume Sampler) is calibrated using an accurate flowmeter and restrictor valve. Measurements of various parameters are made and related to flow through the unit. Procedures used by EPA for both PDP (Positive Displacement Pump) and CFV (Critical Flow Venturi) are outlined below. Other procedures yielding equivalent results may be used if approved in advance by the Administrator. After the calibration curve has been obtained, verification of the entire system can be performed by injecting a known mass of gas into the system and comparing the mass indicated by the system to the true mass injected. An indicated error does not necessarily mean that the calibration is wrong, since other factors can influence the accuracy of the system, e.g. analyzer calibration. A verification procedure is found in paragraph (c) of this section.

(a) *PDP calibration.* (1) The following calibration procedure outlines the equipment, the test configuration, and the various parameters which must be measured to establish the flow rate of the constant volume sampler pump. All the parameters related to the pump are simultaneously measured with the parameters related to a flowmeter which is connected in series with the pump. The calculated flow rate (at pump inlet absolute pressure and temperature) can then be plotted versus a correlation function which is the value of a specific combination of pump parameters. The linear equation which relates the pump flow and the correlation function is then determined. In the event that a CVS has a multiple speed drive, a calibration for each range used must be performed.

(2) This calibration procedure is based on the measurement of the absolute values of the pump and flowmeter parameters that relate the flow rate at each point. Three conditions must be

maintained to assure the accuracy and integrity of the calibration curve. First, the pump pressures should be measured at taps on the pump rather than at the external piping on the pump inlet and outlet. Pressure taps that are mounted at the top center and bottom center of the pump drive headplate are exposed to the actual pump cavity pressures, and therefore reflect the absolute pressure differentials. Secondly, temperature stability must be maintained during the calibration. The laminar flowmeter is sensitive to inlet temperature oscillations which cause the data points to be scattered. Gradual changes (±1 °C (1.8 °F)) in temperature are acceptable as long as they occur over a period of several minutes. Finally, all connections between the flowmeter and the CVS pump must be absolutely void of any leakage.

(3) During an exhaust emission test the measurement of these same pump parameters enables the user to calculate the flow rate from the calibration equation.

(4) Connect a system as shown in Figure F78–5. Although particular types of equipment are shown, other configurations that yield equivalent results may be used if approved in advance by the Administrator. For the system indicated, the following data with given accuracy are required:

CALIBRATION DATA MEASUREMENTS

Parameter	Symbol	Units	Tolerances
Barometric pressure (corrected)	P_B	kPa (in. Hg)	±0.03 kPa (±0.01 in. Hg).
Ambient temperature	T_A	°C (°F)	±0.3 °C (±0.54 °F).
Air temperature into LFE	ETI	°C (F)	±0.15 °C (±0.27 °F).
Pressure depression upstream of LFE	EPI	kPa (in. H_2O)	±0.01 kPa (±0.05 in. H_2O).
Pressure drop across the LFE matrix	EDP	kPa (in. H_2O)	±0.001 kPa (±0.005 in. H_2O).
Air temperature at CVS pump inlet	PTI	°C (°F)	±0.25 °C (±0.45 °F).
Pressure depression at CVS pump inlet	PPI	kPa (in. Fluid)	±0.021 kPa (±0.046 in. Fluid).
Specific gravity of manometer fluid (1.75 oil)	Sp. Gr.		
Pressure head at CVS pump outlet	PPO	kPa (in. Fluid)	±0.021 kPa (±0.046 in. Fluid).
Air temperature at CVS pump outlet (optional)	PTO	°C (°F)	±0.25 °C (±0.45 °F).
Pump revolutions during test period	N	Revs	±1 Rev.
Elapsed time for test period	t	s	±0.05 s.

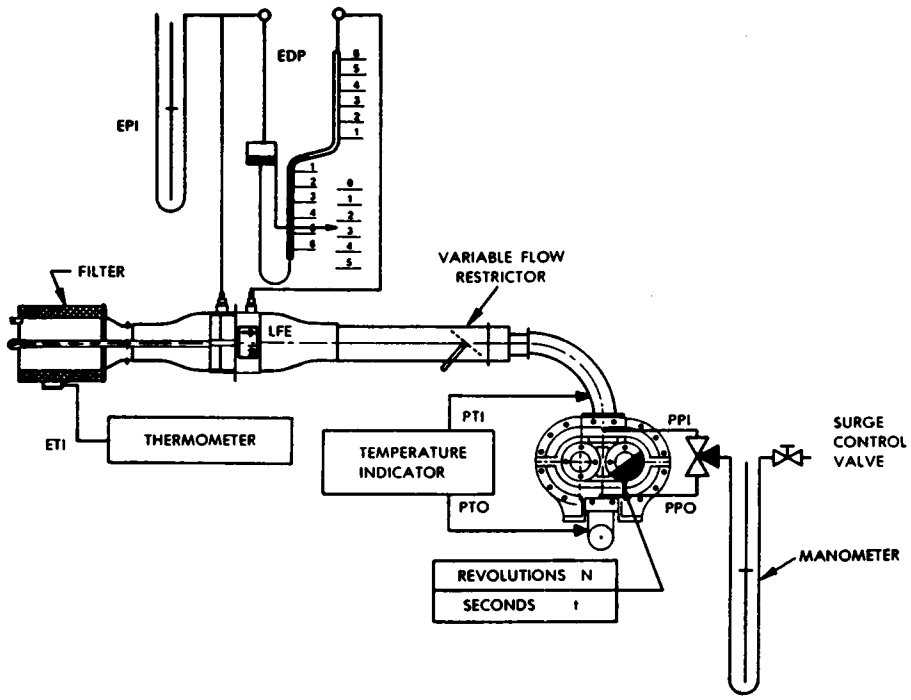

F78–5 —PDP-CVS CALIBRATION CONFIGURATION

(5) After the system has been connected as shown in Figure F78–5, set the variable restrictor in the wide open position and run the CVS pump for twenty minutes. Record the calibration data.

(6) Reset the restrictor valve to a more restricted condition in an increment of pump inlet depression (about 1.0 kPa (4″ H_2O)) that will yield a minimum of six data points for the total calibration. Allow the system to stabilize for 3 minutes and repeat the data acquisition.

(7) *Data analysis:* (i) The air flow rate, Q_s, at each test point is calculated from the flowmeter data using the manufacturer's prescribed method.

(ii) The air flow rate is then converted to pump flow, V_o, per revolution at absolute pump inlet temperature and pressure.

$$V_o = (Q_s/n) \times (T_p/293.15) \times (101.325/P_p)$$

where:

V_o = Pump flow, m^3/revolution (ft^3/revolution) at T_p, P_p

Q_s = Meter air flow rate in standard cubic metres per minute, standard conditions are 20 °C, 101.325 kPa (68 °F, 29.92 in. Hg).

n = Pump speed in revolutions per minute.

T_p = Pump inlet temperature, K(R) = PTI + 273.15 for English units, T_p = PTI + 459.67

P_p = Absolute pump inlet pressure, kPa (in. Hg) = P_B − PPI for English units, P_p = P_B − PPI (SP. GR./13.57)

where:

P_B = barometric pressure, kPa (in. Hg)

PPI = Pump inlet depression, kPa (in. fluid)

SP. GR. = Specific gravity of manometer fluid relative to water.

(iii) The correlation function at each test point is then calculated from the calibration data:

$$X_o = \frac{1}{n}\sqrt{\frac{\Delta P_p}{P_e}}$$

where:

X_o = correlation function.

P_p = The pressure differential from pump inlet to pump outlet, kPa (in. Hg) = $P_e - P_p$

P_e = Absolute pump outlet pressure, kPa (in. Hg) = P_B + PPO for English units, $P_e = P_B$ + PPO(SP. GR./13.57)

where:

PPO = Pressure head at pump outlet, kPa (in. fluid)

(iv) A linear least squares fit is performed to generate the calibration equations which have the forms:

$$V_o = D_o - M(X_o)$$
$$n = A - B(P_p)$$

D_o, M, A, and B are the slope-intercept constants describing the lines.

(8) A CVS system that has multiple speeds shall be calibrated on each speed used. The calibration curves generated for the ranges will be approximately parallel and the intercept values, D_Q, will increase as the pump flow range decreases.

(9) If the calibration has been performed carefully, the calculated values from the equation will be within ±0.50 percent of the measured value of V_O. Values of M will vary from one pump to another, but values of D_O for pumps of the same make, model, and range should agree within ±3 percent of each other. Particulate influx from use will cause the pump slip to decrease as reflected by lower values for M. Calibrations should be performed at pump startup and after major maintenance to assure the stability of the pump slip rate. Analysis of mass injection data will also reflect pump slip stability.

(b) *CFV calibration*. (1) Calibration of the Critical Flow Venturi (CFV) is based upon the flow equation for a critical venturi. Gas flow is a function of inlet pressure and temperature:

$$Q_s = \frac{K_v P}{\sqrt{T}}$$

where:

Q_s = Flow
K_v = Calibration coefficient
P = Absolute pressure
T = Absolute temperature

The calibration procedure described below establishes the value of the calibration coefficient at measured values of pressure, temperature and air flow.

(2) The manufacturer's recommended procedure shall be followed for calibrating electronic portions of the CFV.

(3) Measurements necessary for flow calibration are as follows:

CALIBRATION DATA MEASUREMENTS

Parameter	Symbol	Units	Tolerances
Barometric pressure (corrected)	P_B	kPa (in. Hg)	±0.03 kPa (±0.01 in. Hg).
Air temperature, flowmeter	ETI	°C (°F)	±0.15 °C (±0.27 °F).
Pressure depression upstream of LFE	EPI	kPa (in. H_2O)	±0.01 kPa (±0.05 in. H_2O).
Pressure drop across LFE matrix	EDP	kPa (in. H_2O)	±0.001 kPa (±0.005 in. H_2O).
Air flow	Q_s	m^3/min. (ft^3/min)	±0.5%.
CFV inlet depression	PPI	kPa (in. fluid)	±0.02 kPa (±0.05 in. fluid).
Temperature at venturi inlet	T_V	°C (°F)	±0.25 °C (±0.45 °F).
Specific gravity of manometer fluid (1.75 oil)	Sp. Gr..		

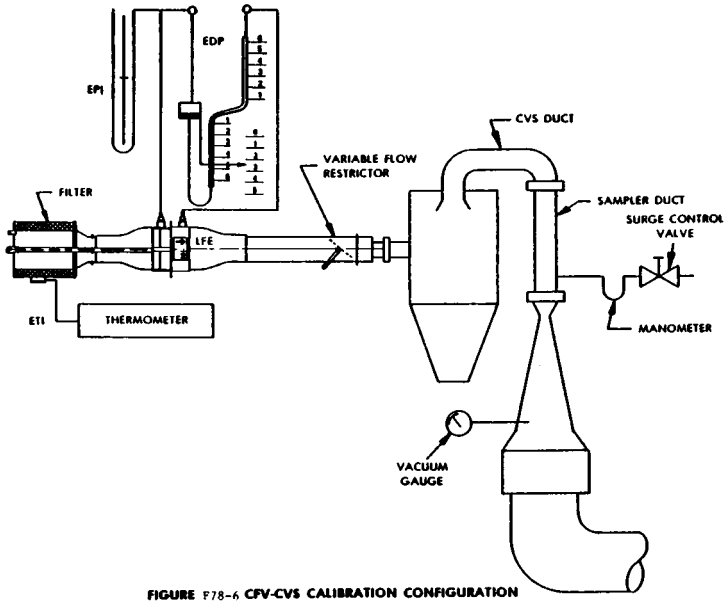

FIGURE F78–6 CFV-CVS CALIBRATION CONFIGURATION

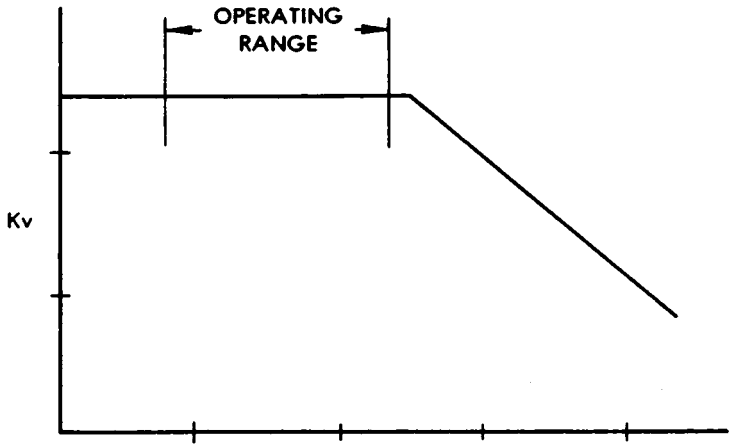

FIGURE F78–7 –SONIC FLOW CHOKING

(4) Set up equipment as shown in Figure F78–6 and check for leaks. Any leaks between the flow measuring device and the critical flow venturi will seriously affect the accuracy of the calibration.

(5) Set the variable flow restrictor to the open position, start the blower and allow the system to stabilize. Record data from all instruments.

(6) Vary the flow restrictor and make at least 8 readings across the critical flow range of the venturi.

(7) *Data analysis.* The data recorded during the calibration are to be used in the following calculations:

(i) The air flow rate, Q_s, at each test point is calculated from the flow meter data using the manufacturer's prescribed method.

(ii) Calculate values of the calibration coefficient for each test point:

$$K_v = \frac{Q_s \sqrt{T_v}}{P_v}$$

where:

Q_s = Flow rate, standard conditions are 20 °C, 101.325 kPa (68 °F, 29.92 in. Hg)

T_v = Temperature at venturi inlet, K(R).

P_v = Pressure at venturi inlet, kPa (mm Hg) = $P_B - PPI$ for English units $P_v = P_B -$ PPI (SP. GR./13.57).

where:

PPI = Venturi inlet pressure depression, kPa (in. fluid).

SP. GR. = Specific gravity of manometer fluid, relative to water.

(iii) Plot K_v as a function of venturi inlet depression. For sonic flow, K_v will have a relatively constant value. As pressure decreases (vacuum increases), the venturi becomes unchoked and K_v decreases (is no longer constant). See Figure F78–7.

(iv) For a minimum of 8 points in the critical region calculate an average K_v and the standard deviation.

(v) If the standard deviation exceeds 0.3 percent of the average K_v take corrective action.

(c) *CVS System Verification.* The following ''gravimetric'' technique can be used to verify that the CVS and analytical instruments can accurately measure a mass of gas that has been injected into the system. (Verification can also be accomplished by constant flow metering using critical flow orifice devices.)

(1) Obtain a small cylinder that has been charged with pure propane or carbon monoxide gas (caution—carbon monoxide is poisonous).

(2) Determine a reference cylinder weight to the nearest 0.01 grams.

(3) Operate the CVS in the normal manner and release a quantity of pure propane or carbon monoxide into the system during the sampling period (approximately 5 minutes).

(4) The calculations of § 86.544 are performed in the normal way except in the case of propane. The density of propane (0.6109 kg/m^3/carbon atom (17.30 g/ft^3/carbon atom)) is used in place of the density of exhaust hydrocarbons. In the case of carbon monoxide, the density of 1.164 kg/m^3 (32.97 g/ft^3) is used.

(5) The gravimetric mass is subtracted from the CVS measured mass and then divided by the gravimetric mass to determine the percent accuracy of the system.

(6) The cause for any discrepancy greater than ±2 percent must be found and corrected.

[42 FR 1137, Jan. 5, 1977, as amended at 42 FR 56738, Oct. 28, 1977]

§ 86.519–90 Constant volume sampler calibration.

(a) The CVS (Constant Volume Sampler) is calibrated using an accurate flowmeter and restrictor valve. Measurements of various parameters are made and related to flow through the unit. Procedures used by EPA for both PDP (Positive Displacement Pump) and CFV (Critical Flow Venturi) are outlined below. Other procedures yielding equivalent results may be used if approved in advance by the Administrator. After the calibration curve has been obtained, verification of the entire system can be performed by injecting a known mass of gas into the system and comparing the mass indicated by the system to the true mass injected. An indicated error does not necessarily mean that the calibration is wrong, since other factors can influence the accuracy of the system, e.g., analyzer calibration. A verification procedure is found in paragraph (d) of this section.

(b) *PDP calibration.* (1) The following calibration procedures outlines the equipment, the test configuration, and the various parameters which must be measured to establish the flow rate of the constant volume sampler pump. All the parameters related to the pump are simultaneously measured with the parameters related to a flowmeter which is connected in series with the pump. The calculated flow rate (at pump inlet absolute pressure and temperature) can then be plotted versus a correlation function which is the value of a specific combination of pump parameters. The linear equation which relates the pump flow and the correlation function is then determined. In the event that a

CVS has a multiple speed drive, a calibration for each range must be performed.

(2) This calibration procedure is based on the measurement of the absolute values of the pump and flowmeter parameters that relate the flow rate at each point. Three conditions must be maintained to assure the accuracy and integrity of the calibration curve. First, the pump pressures should be measured at taps on the pump rather than at the external piping on the pump inlet and outlet. Pressure taps that are mounted at the top center and bottom center of the pump drive headplate are exposed to the actual pump cavity pressures, and therefore reflect the absolute pressure differentials. Secondly, temperature stability must be maintained during the calibration. The laminar flowmeter is sensitive to inlet temperature oscillations which cause the data points to be scattered. Gradual changes (±1 °C (±1.8 °F)) in temperature are acceptable as long as they occur over a period of several minutes. Finally, all connections between the flowmeter and the CVS pump must be absolutely void of any leakage.

(3) During an exhaust emission test the measurement of these same pump parameters enables the user to calculate the flow rate from the calibration equation.

(4) Connect a system as shown in Figure F78–5. Although particular types of equipment are shown, other configurations that yield equivalent results may be used if approved in advance by the Administrator. For the system indicated, the following data with given accuracy are required:

CALIBRATION DATA MEASUREMENTS

Parameter	Symbol	Units	Tolerances
Barometric pressure corrected	P_B	kPa (in. Hg)	±0.03 kPa (±0.01 in. Hg)
Ambient temperature	T_A	°C (°F)	±0.3 °C (±0.54 °F)
Air Temperature into LFE	ETI	°C (°F)	±0.15 °C (±0.27 °F)
Pressure depression upstream of LFE	EPI	kPa (in. H_2O)	±0.01 kPa (±0.05 in. H_2O)
Pressure drop across the LFE matrix	EDP	kPa (in. H_2O)	±0.001 kPa (±0.005 in. H_2O)
Air temperature at CVS pump inlet	PTI	°C (°F)	±0.25 °C (±0.45 °F)
Pressure depression at CVS pump inlet	PPI	kPa (in. Fluid)	±0.021 kPa (±0.046 in. Fluid)
Specific gravity of manometer fluid (1.75 oil).	Sp Gr		
Pressure head at CVS pump outlet	PPO	kPa (in. Fluid)	±0.21 kPa (±0.046 in. Fluid)
Air temperature at CVS pump outlet (optional)	PTO	°C (°F)	±0.25 °C (±0.45 °F)
Pump revolutions during test period	N	Revs	± l Rev.
Elapsed time for test period	t	sec.	±0.05 sec.

(5) After the system has been connected as shown in Figure F78–6, set the variable restrictor in the wide open position and run the CVS pump for twenty minutes. Record the calibration data.

(6) Reset the restrictor valve to a more restricted condition in an increment of pump inlet depression (about 1.0 kPa (4 in. H_2O)) that will yield a minimum of six data points for the total calibration. Allow the system to stabilize for 3 minutes and repeat the data acquisition.

(7) Data analysis:

(i) The air flow rate, Q_s, at each test point is calculated from the flowmeter data using the manufacturers' prescribed method.

(ii) The air flow rate is then converted to pump flow, V_o in m^3 per revolution at absolute pump inlet temperature and pressure.

$$V_o = (Q_s/n) \times (T_p/293) \times (101.3/P_p)$$

Where:

(A) V_o = Pump flow, m^3/rev (ft^3/rev) at T_p, P_p.

(B) Q_s = Meter air flow rate in standard cubic meters per minute; standard conditions are 20 °C, 101.3 kPa (68 °F, 29.92 in. Hg).

(C) n = Pump speed in revolutions per minute.

(D)(*1*) T_p = Pump inlet temperature, (°K) = PTI + 273.

(*2*) *For English units,* T_p = PTI + 460.

(E)(*1*) P_p = Absolute pump inlet pressure, kPa (in. Hg) = P_B − PPI.

(*2*) *For English units,* P_p = P_B − PPI(SP.GR./13.57).

Where:

(F) P_B = barometric pressure, kPa (in. Hg.).

(G) PPI = Pump inlet depression, kPa (in. fluid).

(H) SP.GR. = Specific gravity of manometer fluid relative to water.

(iii) The correlation function at each test point is then calculated from the calibration data:

$$X_o = \frac{1}{n}\sqrt{\frac{\Delta P_p}{P_e}}$$

Where:

(A) X_o = correlation function.

(B) ΔP_p = The pressure differential from pump inlet to pump outlet, kPa (in. Hg) = $P_e - P_p$.

(C)(*1*) P_e = Absolute pump outlet pressure, kPa (in. Hg) = P_B + PPO.

(*2*) *For English units,* P_e = P_B + PPO(SP.GR./13.57).

Where:

(D) PPO = Pressure head at pump outlet, kPa (in. fluid).

(iv) A linear least squares fit is performed to generate the calibration equations which have the forms:

$V_o = D_o - M(X_o)$

$n = A - B(\Delta P_p)$

D_0' M, A, and B are the slope-intercept constants, describing the lines.

(8) A CVS system that has multiple speeds shall be calibrated on each speed used. The calibration curves generated for the ranges will be approximately parallel and the intercept values, D_0' will increase as the pump flow range decreases.

(9) If the calibration has been performed carefully, the calculated values from the equation will be within ±0.50 percent of the measured value of V_o. Values of M will vary from one pump to another, but values of D_o for pumps of the same make, model, and range should agree within ±3 percent of each other. Particulate influx from use will cause the pump slip to decrease as reflected by lower values for M. Calibrations should be performed at pump startup and after major maintenance to assure the stability of the pump slip rate. Analysis of mass injection data will also reflect pump slip stability.

(c) *CFV calibration.* (1) Calibration of the Critical Flow Venturi (CFV) is based upon the flow equation for a critical venturi. Gas flow is a function of inlet pressure and temperature:

$$Q_s = \frac{K_v P}{\sqrt{T}}$$

Where:

(i) Q_s = Flow.

(ii) K_v = Calibration coefficient.

(iii) P = Absolute pressure.

(iv) T = Absolute temperature.

The calibration procedure described below establishes the value of the calibration coefficient at the measured values of pressure, temperature and air flow.

(2) The manufacturer's recommended procedure shall be followed for calibrating electronic portions of the CFV.

(3) Measurements necessary for flow calibration are as follows:

CALIBRATION DATA MEASUREMENTS

Parameter	Symbol	Units	Tolerances
Barometric pressure (corrected)	P_B	kPa (in. Hg)	±0.03 kPa (±0.01 in. Hg)
Air temperature, flowmeter	ETI	°C (°F)	±0.15 °C (±0.27 °F)
Pressure depression upstream of LFE	EPI	kPa (in. H_2O)	±0.01kPa (±0.05 in. H_2O)
Pressure drop across LFE matrix	EDP	kPa (in. H_2O)	±0.001 kPa (±0.005 in. H_2O)
Air flow	Q_s	m^3/min (ft^3/min)	±0.5%
CFV inlet depression	PPI	kPa (in. fluid)	±0.02 kPa (±0.05 in. fluid)
Temperature at venturi inlet	T_v	°C (°F)	±0.25 °C (±0.45 °F)
Specific gravity of manometer fluid (1.75 oil)	Sp Gr	. . .	. . .

(4) Set up equipment as shown in Figure F78–6 and check for leaks. Any leaks between the flow measuring device and the critical flow venturi will seriously affect the accuracy of the calibration.

(5) Set the variable flow restrictor to the open position, start the blower and allow the system to stabilize. Record data from all instruments.

(6) Vary the flow restrictor and make at least 8 readings across the critical flow range of the venturi.

(7) *Data analysis.* The data recorded during the calibration are to be used in the following calculations:

(i) The air flow rate, Q_s, at each test point is calculated from the flowmeter data using the manufacturer's prescribed method.

(ii) Calculate values of the calibration coefficient for each test point:

$$K_v = \frac{Q_s \sqrt{T_v}}{P_v}$$

Where:

(A) Q_s = Flow rate in m^3/minute, standard conditions are 20 °C, 101.3 kPa (68 °F, 29.92 in. Hg)

(B) T_v = Temperature at venturi inlet, °K(°R).

(C)(*1*) P_v = Pressure at venturi inlet, kPa (mm Hg) = P_B–PPI.

(*2*) *For English units,* $P_v = P_B - PPI$ (SP.GR./13.57).

Where:

(D) PPI = Venturi inlet pressure depression, kPa (in. fluid).

(E) SP.GR.=Specific gravity of manometer fluid, relative to water.

(iii) Plot K_v as a function of venturi inlet depression. For sonic flow, K_v will have a relatively constant value. As pressure decreases (vacuum increases), the venturi becomes unchoked and K_v decreases (is no longer constant). See Figure F78–7.

(iv) For a minimum of 8 points in the critical region, calculate an average K_v and the standard deviation.

(v) If the standard deviation exceeds 0.3 percent of the average K_v, take corrective action.

(d) *CVS system verification.* The following ''gravimetric'' technique can be used to verify that the CVS and analytical instruments can accurately measure a mass of gas that has been injected into the system. If the CVS and analytical system will be used only in the testing of gasoline-fueled vehicles, the system verification may be performed using either propane or carbon monoxide. If the CVS and analytical system will be used with methanol-fueled vehicles as well as gasoline-fueled vehicles, system verification performance check must include a methanol check in addition to either the propane or carbon monoxide check. (Verification can also be accomplished by constant flow metering using critical flow orifice devices.)

(1) Obtain a small cylinder that has been charged with pure propane or carbon monoxide gas (CAUTION—carbon monoxide is poisonous).

(2) Determine a reference cylinder weight to the nearest 0.01 grams.

(3) Operate the CVS in the normal manner and release a quantity of pure propane or carbon monoxide into the system during the sampling period (approximately 5 minutes).

(4) Following completion of step (3) above (if methanol injection is required), continue to operate the CVS in the normal manner and release a known quantity of pure methanol (in gaseous form) into the system during the sampling period (approximately 5 minutes). This step does not need to be performed with each verification, provided that it is performed at least twice annually.

(5) The calculations of § 86.544 are performed in the normal way except in the case of propane. The density of propane (0.6109 kg/m^3/carbon atom (17.30 g/ft^3/carbon atom)) is used in place of the density of exhaust hydrocarbons. In the case of carbon monoxide, the density of 1.164 kg/m^3 (32.97 g/ft^3) is used. In the case of methanol, the density of 1.332 kg/m^3 (37.71 g/ft^3) is used.

(6) The gravimetric mass is subtracted from the CVS measured mass and then divided by the gravimetric mass to determine the percent accuracy of the system.

(7) The cause for any discrepancy greater than ±2 percent must be found and corrected. The Administrator, upon request, may waive the requirement to comply with ±2 percent methanol recovery tolerance, and instead require compliance with a higher tolerance (not to exceed ±6 percent), provided that:

(i) The Administrator determines that compliance with the specified tolerance is not practically feasible; and

(ii) The manufacturer makes information available to the Administrator which indicates that the calibration tests and their results are consistent

with good laboratory practice, and that the results are consistent with the results of calibration testing conducted by the Administrator.

[54 FR 14546, Apr. 11, 1989, as amended at 60 FR 34355, June 30, 1995]

§86.521–90 Hydrocarbon analyzer calibration.

(a) The FID hydrocarbon analyzer shall receive the following initial and periodic calibration. The HFID used with methanol-fueled vehicles shall be operated at 235 °F±15 °F (113 °C±8 °C).

(b) *Initial and periodic optimization of detector response.* Prior to its introduction into service and at least annually thereafter, the FID hydrocarbon analyzer shall be adjusted for optimum hydrocarbon response. Analyzers used with petroleum fuels and liquefied petroleum gas-fuel shall be optimized using propane. Analyzers used with natural gas-fuel for measurement of hydrocarbons shall be optimized using methane. If a single analyzer is used for all measurements, it shall be optimized using propane and its response factor for methane shall be determined and accounted for in measurements of total hydrocarbons from natural gas-fuel. Alternate methods yielding equivalent results may be used, if approved in advance by the Administrator.

(1) Follow the manufacturer's instructions or good engineering practice for instrument startup and basic operating adjustment using the appropriate FID fuel and zero-grade air.

(2) Optimize on the most common operating range. Introduce into the analyzer a propane (methane as appropriate) in air mixture (methanol in air mixture for methanol-fueled vehicles when optional methanol calibrated FID procedure is used during the 1990 through 1994 model year) with a propane (or methane or methanol as appropriate) concentration equal to approximately 90 percent of the most common operating range.

(3) Select an operating FID fuel flow rate that will give near maximum response and least variation in response with minor fuel flow variations.

(4) To determine the optimum air flow, use the FID fuel flow setting determined above and vary air flow.

(5) After the optimum flow rates have been determined, record them for future reference.

(c) *Initial and periodic calibration.* Prior to its introduction into service and monthly thereafter the FID hydrocarbon analyzer shall be calibrated on all normally used instrument ranges, and, if applicable, the methanol response factor shall be determined (paragraph (d) of this section). Use the same flow rate as when analyzing sample.

(1) Adjust analyzer to optimize performance.

(2) Zero the hydrocarbon analyzer with zero grade air.

(3) Calibrate on each normally used operating range with propane in air (or methanol or methane in air as appropriate) calibration gases having nominal concentrations of 15, 30, 45, 60, 75 and 90 percent of that range. For each range calibrated, if the deviation from a least squares best-fit straight line is two percent or less of the value at each data point, concentration values may be calculated by use of a single calibration factor for that range. If the deviation exceeds two percent at any point, the best-fit non-linear equation which represents the data to within two percent of each test point shall be used to determine concentration.

(d) *FID response factor to methanol.* When the FID analyzer is to be used for the analysis of hydrocarbon samples containing methanol, the methanol response factor of the analyzer shall be established. The methanol response factor shall be determined at several concentrations in the range of concentrations in the exhaust sample, using either bag samples or gas bottles meeting the requirements of §86.514.

(1) The bag sample, if used, of methanol for analysis in the FID shall be prepared using the apparatus shown in Figure F90–4. A known volume of methanol is injected, using a microliter syringe, into the heated mixing zone (250 °F (121 °C)) of the apparatus. The methanol is vaporized and swept into the sample bag with a known volume of zero grade air measured by a gas flow meter meeting the performance requirements of §86.120.

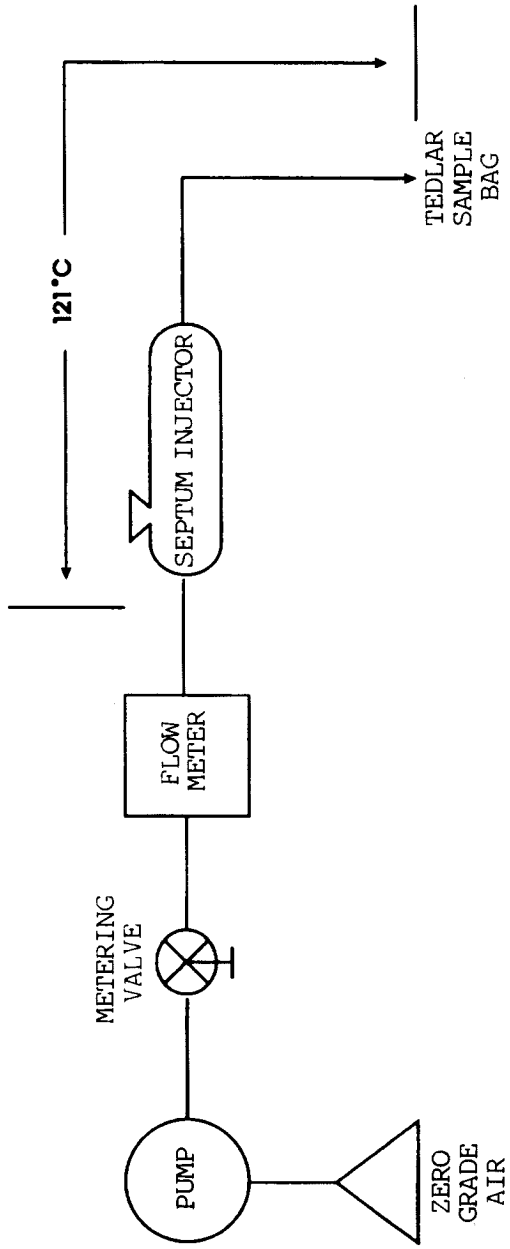

FIGURE F90-4 APPARATUS FOR PREPARATION OF FID METHANOL RESPONSE CALIBRATION MIX

(2) The bag sample is analyzed using the FID.

(3) The FID response factor, r, is calculated as follows:

$$r = FID_{ppm}/SAM_{ppm}$$

Where:

(i) r = FID response factor.

(ii) FID_{ppm} = FID reading, ppmC.

(iii) SAMppm=methanol concentration in the sample bag, or gas bottle, in ppmC. SAMppm for sample bags:

$$= \frac{0.02406 \times \text{Fuel injected} \times \text{Fuel density}}{\text{Air volume} \times \text{Mol. Wt. } CH_3OH}$$

Where:

(iv) 0.02406 = Volume of one mole at 101.3 kPa (29.92 in. Hg) and 20 °C (68 °F), m^3.

(v) Fuel injected = Volume of methanol injected, ml.

(vi) Fuel Density = Density of methanol, 0.7914 g/ml

(vii) Air volume = Volume of zero grade air, m^3

(viii) Mol. Wt. CH_3OH = 32.04

(e) *FID response factor to methane.* When the FID analyzer is to be used for the analysis of natural gas-fueled motorcycle hydrocarbon samples, the methane response factor of the analyzer shall be established. To determine the total hydrocarbon FID response to methane, known methane in air concentrations traceable to National Institute of Standards and Technology (NIST) shall be analyzed by the FID. Several methane concentrations shall be analyzed by the FID in the range of concentrations in the exhaust sample. The total hydrocarbon FID response to methane is calculated as follows:

r_{CH4} = FIDppm/SAMppm

Where:

(1) r_{CH4} = FID response factor to methane.

(2) FIDppm = FID reading in ppmC.

(3) SAMppm = the known methane concentration in ppmC.

[54 FR 14546, Apr. 11, 1989, as amended at 59 FR 48514, Sept. 21, 1994; 60 FR 34355, June 30, 1995]

§ 86.522–78 Carbon monoxide analyzer calibration.

(a) *Initial and periodic interference check.* Prior to its introduction into service and annually thereafter the NDIR carbon monoxide analyzer shall be checked for response to water vapor and CO_2:

(1) Follow the manufacturer's instructions for instrument startup and operation. Adjust the analyzer to optimize performance on the most sensitive range.

(2) Zero the carbon monoxide analyzer with either zero grade air or zero grade nitrogen.

(3) Bubble a mixture of 3 percent CO_2 in N_2 through water at room temperature and record analyzer response.

(4) An analyzer response of more than 1 percent of full scale for ranges above 300 ppm full scale or of more than 3 ppm on ranges below 300 ppm full scale will require corrective action. (Use of conditioning columns is one form of corrective action which may be taken.)

(b) *Initial and periodic calibration.* Prior to its introduction into service and monthly thereafter the NDIR carbon monoxide analyzer shall be calibrated.

(1) Adjust the analyzer to optimize performance.

(2) Zero the carbon monoxide analyzer with either zero grade air or zero grade nitrogen.

(3) Calibrate on each normally used operating range with carbon monoxide in N_2 calibration gases having nominal concentrations of 15, 30, 45, 60, 75, and 90 percent of that range. Additional calibration points may be generated. For each range calibrated, if the deviation from a least-squares best-fit straight line is 2 percent or less of the value at each data point, concentration values may be calculated by use of a single calibration factor for that range. If the deviation exceeds 2 percent at any point, the best-fit non-linear equation which represents the data to within 2 percent of each test point shall be used to determine concentration.

§ 86.523–78 Oxides of nitrogen analyzer calibration.

(a) Prior to introduction into service and at least monthly thereafter, if oxides of nitrogen are measured, the chemiluminescent oxides of nitrogen analyzer must be checked for NO_2 to NO converter efficiency. Figure F78–8 is a reference for paragraphs (a) (1) through (11) of this section.

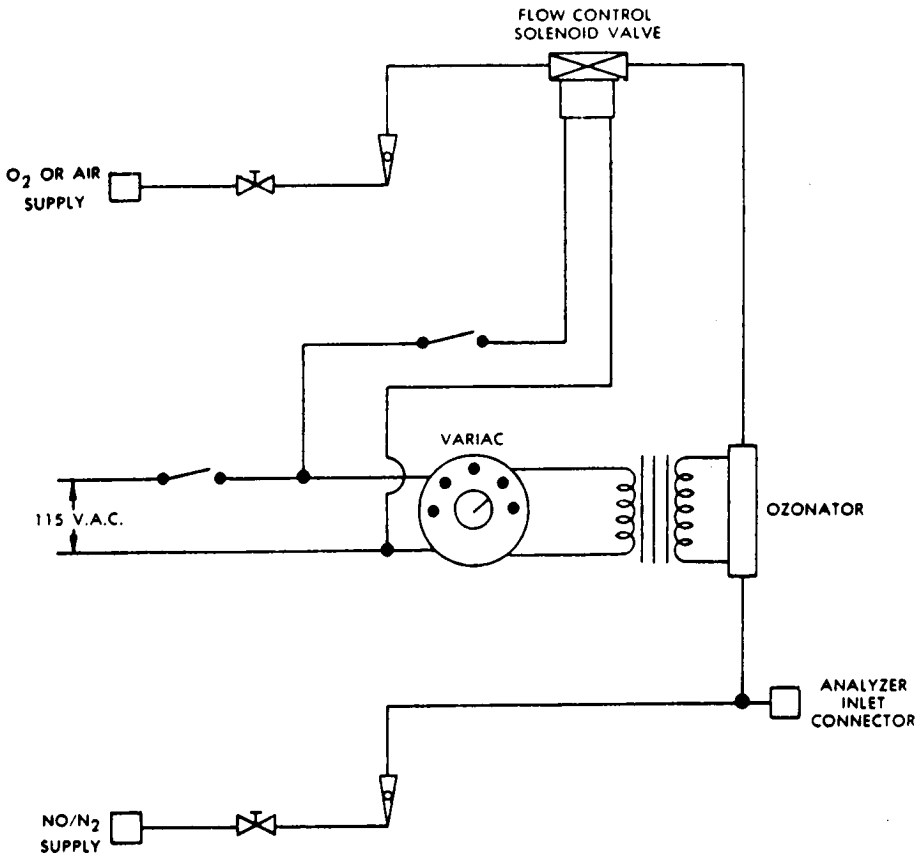

(SEE FIG F78–3 FOR SYMBOL LEGEND)
FIGURE F78–8—NOx CONVERTER EFFICIENCY DETECTOR

(1) Follow the manufacturer's instructions for instrument startup and operation. Adjust the analyzer to optimize performance.

(2) Zero the oxides of nitrogen analyzer with zero grade air or zero grade nitrogen.

(3) Connect the outlet of the NO_X generator to the sample inlet of the oxides of nitrogen analyzer which has been set to the most common operating range.

(4) Introduce into the NO_X generator analyzer-system a NO in nitrogen (N_2) mixture with a NO concentration equal to approximately 80 percent of the most common operating range. The NO_2 content of the gas mixture shall be less than 5 percent of the NO concentration.

(5) With the oxides of nitrogen analyzer in the NO mode, record the concentration of NO indicated by the analyzer.

(6) Turn on the NO_X generator O_2 (or air) supply and adjust the O_2 (or air) flow rate so that the NO indicated by the analyzer is about 10 percent less than indicated in step 5. Record the concentration of NO in this NO + O_2 mixture.

(7) Switch the NO_X generator to the generation mode and adjust the generation rate so that the NO measured on

the analyzer is 20 percent of that measured in step 5. There must be at least 10 percent unreacted NO at this point. Record the concentration of residual NO.

(8) Switch the oxides of nitrogen analyzer to the NO_X mode and measure total NO_X. Record this value.

(9) Switch off the NO_X generation but maintain gas flow through the system. The oxides of nitrogen analyzer will indicate the NO_X in the NO + O_2 mixture. Record this value.

(10) Turn off the NO_X generator O_2 (or air) supply. The analyzer will now indicate the NO_X in the original NO in N_2 mixture. This value should be no more than 5 percent above the value indicated in step 4.

(11) Calculate the efficiency of the NO_X converter by substituting the concentrations obtained into the following equation:

Percent Efficiency = [1 + (a–b)/(c–d)]x100

where:
a = concentration obtained in step (8).
b = concentration obtained in step (9).
c = concentration obtained in step (6).
d = concentration obtained in step (7).

If converter efficiency is not greater than 90 percent corrective action will be required.

(b) *Initial and periodic calibration.* Prior to its introduction into service and monthly thereafter, if oxides of nitrogen are measured, the chemiluminescent oxides of nitrogen analyzer shall be calibrated on all normally used instrument ranges. Use the same flow rate as when analyzing samples. Proceed as follows:

(1) Adjust analyzer to optimize performance.

(2) Zero the oxides of nitrogen analyzer with zero grade air or zero grade nitrogen.

(3) Calibrate on each normally used operating range with NO in N_2 calibration gases with nominal concentrations of 50 and 100 percent of that range. Additional calibration points may be generated.

(c) When testing methanol-fueled motorcycles, it may be necessary to clean the analyzer frequently to prevent interference with NO_X measurements (see EPA/600/S3–88/040).

[42 FR 1137, Jan. 5, 1977, as amended at 52 FR 47870, Dec. 16, 1987; 58 FR 58423, Nov. 1, 1993; 60 FR 34357, June 30, 1995]

§86.524–78 Carbon dioxide analyzer calibration.

(a) Prior to its introduction into service and monthly thereafter the NDIR carbon dioxide analyzer shall be calibrated:

(1) Follow the manufacturer's instructions for instrument startup and operation. Adjust the analyzer to optimize performance.

(2) Zero the carbon dioxide analyzer with either zero grade air or zero grade nitrogen.

(3) Calibrate on each normally used operating range with carbon dioxide in N_2 calibration gases with nominal concentrations of 15, 30, 45, 60, 75, and 90 percent of that range. Additional calibration points may be generated. For each range calibrated, if the deviation from a least-squares best-fit straight line is 2 percent or less of the value at each data point, concentration values may be calculated by use of a single calibration factor for that range. If the deviation exceeds 2 percent at any point, the best-fit non-linear equation which represents the data to within 2 percent of each test point shall be used to determine concentration.

(b) [Reserved]

§86.526–90 Calibration of other equipment.

Other test equipment used for testing shall be calibrated as often as required by the manufacturer or as necessary according to good practice. Specific equipment requiring calibration is the gas chromatograph and flame ionization detector used in measuring methanol and the high pressure liquid chromatograph (HPLC) and ultraviolet detector for measuring formaldehyde.

[54 FR 14551, Apr. 11, 1989]

§86.527–90 Test procedures, overview.

(a) The procedures described in this and subsequent sections are used to determine the conformity of motorcycles with the standards set forth in subpart E of this part.

(b) The overall test consists of prescribed sequences of fueling, parking, and operating conditions.

(c) The exhaust emission test is designed to determine hydrocarbon (gasoline-fueled, natural gas-fueled and liquefied petroleum gas-fueled motorcycles), methanol, formaldehyde, and hydrocarbon (methanol-fueled motorcycles), carbon monoxide and oxides of nitrogen mass emissions while simulating an average trip in an urban area. The test consists of engine startups and motorcycle operation on a chassis dynamometer, through a specified driving schedule. A proportional part of the diluted exhaust emissions is collected continuously for subsequent analysis, using a constant volume (variable dilution) sampler.

(d) Except in cases of component malfunction or failure, all emission control systems installed on or incorporated in a new motorcycle shall be functioning during all procedures in this subpart. Maintenance to correct component malfunction or failure shall be authorized in accordance with subpart E of this part.

(e) Background concentrations are measured for all species for which emissions measurements are made. For exhaust testing, this requires sampling and analysis of the dilution air. (When testing methanol-fueled motorcycles, manufacturers may choose not to measure background concentrations of methanol and/or formaldehyde, and then assume that the concentrations are zero during calculations.)

[54 FR 14551, Apr. 11, 1989, as amended at 59 FR 48515, Sept. 21, 1994; 60 FR 34357, June 30, 1995]

§ 86.528–78 Transmissions.

(a) Vehicles equipped with transfer cases, multiple sprockets, etc., shall be tested in the manufacturer's recommended configuration for street or highway use. If more than one configuration is recommended or if the recommendation is deemed unreasonable by the Administrator, the Administrator will specify the test configuration.

(b) All tests shall be conducted with automatic transmissions in ''Drive'' (highest gear). Automatic clutch-torque converter transmissions may be shifted as manual transmissions at the option of the manufacturer.

(c) Idle modes shall be run with automatic transmissions in ''Drive'' and the wheels braked, manual transmission shall be in gear with the clutch disengaged; except first idle, see §§ 86.536 and 86.537.

(d) The vehicle shall be driven with minimum throttle movement to maintain the desired speed. No simultaneous use of brake and throttle shall be permitted.

(e) Acceleration modes shall be driven smoothly. Automatic transmissions shall shift automatically through the normal sequence of gears; manual transmissions shall be shifted as recommended by the manufacturer to the ultimate purchaser (unless determined to be unreasonable by the Administrator) with the operator closing the throttle during each shift and accomplishing the shift with minimum time. If the vehicle cannot accelerate at the specified rate, the vehicle shall be operated with the throttle fully opened until the vehicle speed reaches the value prescribed for that time in the driving schedule.

(f) The deceleration modes shall be run in gear using brakes or throttle as necessary to maintain the desired speed. Manual transmission vehicles shall be downshifted using the same shift points as when upshifting or as recommended by the manufacturer in the vehicle owner's manual. All downshifts shall be made smoothly, disengaging the clutch while shifting and engaging the clutch once the lower gear has been selected. For those modes which require the vehicle to decelerate to zero, manual transmission clutches shall be disengaged when the speed drops below 15 km/h (9.3 mph) for vehicles with engine displacements equal to or greater than 280 cc (17.1 cu. in.), when the speed drops below 10 km/h (6.2 mph) for vehicles with engine displacements less than 280 cc (17.1 cu. in.), when engine roughness is evident, or when engine stalling is imminent.

(g) If downshifting during deceleration is not permitted in the vehicle owner's manual, manual transmissions will be downshifted at the beginning of or during a power mode if recommended by the manufacturer or if

the engine obviously is lugging. For those modes which require these vehicles to decelerate to zero, manual transmission clutches shall be disengaged when the speed drops below 25 km/h (15.5 mph) for vehicles with engine displacement equal to or greater than 280 cc (17.1 cu. in.), when the speed drops below 20 km/h (12.4 mph) for vehicles with engine displacements less than 280 cc (17.1 cu. in.), when engine roughness is evident, or when engine stalling is imminent. While the clutch is disengaged and during these deceleration modes, the vehicle shall be shifted to the appropriate gear for starting the next mode.

(h) If shift speeds are not recommended by the manufacturer, manual transmission vehicles shall be shifted as follows:

(1) For Class I and II motorcycles:

Shift	Speed
1st to 2d gear	19 km/h (11.8 mi/h).
2d to 3d gear	33 km/h (20.5 mi/h).
3d to 4th gear	44 km/h (27.3 mi/h).
4th to 5th gear	53 km/h (32.9 mi/h).

(2) For Class III motorcycles:

Shift	Speed
1st to 2d gear	30 km/h (18.6 mi/h).
2d to 3d gear	45 km/h (28.0 mi/h).
3d to 4th gear	60 km/h (37.3 mi/h).
4th to 5th gear	75 km/h (46.6 mi/h).

(3) Higher gears may be used at the manufacturer's option.

§86.529–78 Road load force and inertia weight determination.

(a) Road load as a function of speed is given by the following equation:

$$F = A + CV^2$$

The values for coefficients A and C and the test inertia are given in Figure F78–9. Velocity (V) is in km/h and force (F) is in newtons. The forces given by this equation shall be simulated to the best ability of the equipment being used.

(b) The inertia given in Figure F78–9 shall be used. Motorcycles with loaded vehicle mass outside these limits shall be tested at an equivalent inertial mass and road load force specified by the Administrator.

FIGURE F78–9

Loaded vehicle mass (kg)	Equivalent inertial mass (kg)	Force coefficients		Force at 65 km/h (nt)	70 to 60 kn/h coastdown calibration times		
		A (nt)	C (nt/(km/h)^2)		Target time (sec)	Allowable tolerance	
						Longest time (sec)	Shortest time (sec)
95–105	100	0.0	0.224	94.8	2.95	3.1	2.8
106–115	110	0.82	.0227	96.8	3.18	3.3	3.0
116–125	120	1.70	.0230	98.8	3.39	3.6	3.2
126–135	130	2.57	.0233	100.9	3.60	3.8	3.4
136–145	140	3.44	.0235	102.9	3.80	4.0	3.6
146–155	150	4.32	0.230	104.9	3.99	4.2	3.8
156–165	160	5.19	.0241	107.0	4.10	4.4	4.0
166–175	170	6.06	.0244	109.0	4.36	4.6	4.2
176–185	180	6.94	.0246	111.0	4.53	4.7	4.3
186–195	190	7.81	.0249	113.1	4.69	4.9	4.5
196–205	200	8.69	.0252	115.1	4.85	5.1	4.6
206–215	210	9.56	.0255	117.1	5.00	5.2	4.8
216–225	220	10.43	.0257	119.2	5.15	5.4	4.9
226–235	230	11.31	.0260	121.2	5.30	5.5	5.1
236–245	240	12.18	.0263	123.2	5.43	5.7	5.2
246–255	250	13.06	.0266	125.3	5.57	5.8	5.4
256–265	260	13.93	.0268	127.3	5.70	5.9	5.5
266–275	270	14.80	.0271	129.3	5.82	6.1	5.6
276–285	280	15.68	.0274	131.4	5.95	6.2	5.7
286–295	290	16.55	.0277	133.4	6.06	6.3	5.8
296–305	300	17.43	.0279	135.4	6.18	6.4	6.0
306–315	310	18.39	.0282	137.5	6.29	6.5	6.1
316–325	320	19.17	.0285	139.5	6.40	6.6	6.2
326–335	330	30.05	.0288	141.6	6.50	6.7	6.3
336–345	340	20.92	.0290	143.6	6.60	6.8	6.4
346–355	350	21.80	.0293	145.6	6.70	6.9	6.5
356–365	360	22.67	.0296	147.7	6.80	7.0	6.6
366–375	370	23.54	.0299	149.7	6.89	7.1	6.7
376–385	380	24.42	.0301	151.7	6.98	7.2	6.8

FIGURE F78–9—Continued

Loaded vehicle mass (kg)	Equivalent inertial mass (kg)	Force coefficients		Force at 65 km/h (nt)	70 to 60 kn/h coastdown calibration times		
		A (nt)	C (nt/(km/h)^2)		Target time (sec)	Allowable tolerance	
						Longest time (sec)	Shortest time (sec)
386–395	390	25.29	.0304	153.8	7.07	7.3	6.9
396–405	400	26.17	.0307	155.8	7.16	7.4	6.9
406–415	410	27.04	.0310	157.8	7.24	7.5	7.0
416–425	420	27.91	.0312	159.9	7.33	7.6	7.1
426–435	430	28.79	.0315	161.9	7.41	7.6	7.2
436–445	440	29.66	.0317	163.7	7.49	7.7	7.3
446–455	450	30.54	.0318	164.9	7.61	7.8	7.4
456–465	460	31.41	.0319	166.0	7.73	8.0	7.5
466–475	470	32.28	.0319	167.1	7.84	8.1	7.6
476–485	480	33.16	.0320	168.3	7.95	8.2	7.7
486–495	490	43.03	.0320	169.4	8.06	8.3	7.8
496–505	500	34.90	.0321	170.5	8.17	8.4	7.9
506–515	510	35.78	.0322	171.7	8.28	8.5	8.0
516–525	520	36.65	.0322	172.8	8.39	8.6	8.2
526–535	530	37.53	.0323	173.9	8.49	8.7	8.3
536–545	540	38.40	.0323	175.1	8.60	8.8	8.4
546–555	550	39.27	.0324	176.2	8.70	9.0	8.5
556–565	560	40.15	.0325	177.3	8.80	9.1	8.6
566–575	570	41.02	.0325	178.5	8.90	9.2	8.7
576–585	580	41.90	.0326	179.6	9.00	9.3	8.8
586–595	590	42.77	.0327	180.8	9.10	9.4	8.9
596–605	600	43.64	.0327	181.9	9.19	9.5	8.9
606–615	610	44.52	.0328	183.0	9.29	9.5	9.0
616–625	620	45.39	.0328	184.2	9.38	9.6	9.1
626–635	630	46.27	.0329	185.3	9.47	9.7	9.2
636–645	640	47.14	.0330	186.4	9.56	9.8	9.3
646–655	650	48.01	.0330	187.6	9.65	9.9	9.4
656–665	660	48.89	.0331	188.7	9.74	10.0	9.5
666–675	670	49.76	.0332	189.8	9.83	10.1	9.6
676–685	680	50.64	.0332	191.0	9.92	10.2	9.7
686–695	690	51.91	.0333	192.1	10.01	10.3	9.8
696–705	700	52.38	.0333	193.2	10.09	10.4	9.8
706–715	710	53.26	.0334	194.4	10.17	10.4	9.9
716–725	720	54.13	.0335	195.5	10.26	10.5	10.0
726–735	730	55.01	.0335	196.6	10.34	10.6	10.1
736–745	740	55.88	.0336	197.8	10.42	10.7	10.2
746–755	750	56.75	.0336	198.9	10.50	10.8	10.2
756–760	760	57.63	.0337	200.1	10.58	10.9	10.3

(c) The dynamometer shall be adjusted to reproduce the specified road load as determined by the most recent calibration. Alternatively, the actual vehicle road load can be measured and duplicated:

(1) Make at least 5 replicate coastdowns in each direction from 70 to 60 km/h on a smooth, level, track under balanced wind conditions. The driver must have a mass of 80±10 kg and be in the normal driving position. Record the coastdown time.

(2) Average the coastdown times. Adjust the dynamometer load so that the coastdown time is duplicated with the vehicle and driver on the dynamometer.

(3) Alternate procedures may be used if approved in advance by the Administrator.

§ 86.529–98 Road load force and inertia weight determination.

(a)(1) Road load as a function of speed is given by the following equation:

$$F = A + CV^2$$

(2) The values for coefficients A and C and the test inertia are given in Figure F98–9 of this section. Velocity V is in km/h and force (F) is in newtons. The forces given by the equation in paragraph (a)(1) of this section shall be simulated to the best ability of the equipment being used.

(b) The inertia given in Figure F98–9 shall be used. Motorcycles with loaded

vehicle mass outside these limits shall be tested at an equivalent inertial mass and road load force specified by the Administrator. Figure F98–9 follows:

FIGURE F98–9

Loaded vehicle mass (kg)	Equivalent inertial mass (kg)	Force coefficients		Force at 65 km/h (nt)	70 to 60 km/h coastdown calibration times		
		A (nt)	C (nt/(km/h)^2)		Target time (sec)	Allowable tolerance	
						Longest time (sec)	Shortest time (sec)
95–105	100	0.0	.0224	94.8	2.95	3.1	2.8
106–115	110	0.82	.0227	96.8	3.18	3.3	3.0
116–125	120	1.70	.0230	98.8	3.39	3.6	3.2
126–135	130	2.57	.0233	100.9	3.60	3.8	3.4
136–145	140	3.44	.0235	102.9	3.80	4.0	3.6
146–155	150	4.32	.0238	104.9	3.99	4.2	3.8
156–165	160	5.19	.0241	107.0	4.10	4.4	4.0
166–175	170	6.06	.0244	109.0	4.36	4.6	4.2
176–185	180	6.94	.0246	111.0	4.53	4.7	4.3
186–195	190	7.81	.0249	113.1	4.69	4.9	4.5
196–205	200	8.69	.0252	115.1	4.85	5.1	4.6
206–215	210	9.56	.0255	117.1	5.00	5.2	4.8
216–225	220	10.43	.0257	119.2	5.15	5.4	4.9
226–235	230	11.31	.0260	121.2	5.30	5.5	5.1
236–245	240	12.18	.0263	123.2	5.43	5.7	5.2
246–255	250	13.06	.0266	125.3	5.57	5.8	5.4
256–265	260	13.93	.0268	127.3	5.70	5.9	5.5
266–275	270	14.80	.0271	129.3	5.82	6.1	5.6
276–285	280	15.68	.0274	131.4	5.95	6.2	5.7
286–295	290	16.55	.0277	133.4	6.06	6.3	5.8
296–305	300	17.43	.0279	135.4	6.18	6.4	6.0
306–315	310	18.30	.0282	137.5	6.29	6.5	6.1
316–325	320	19.17	.0285	139.5	6.40	6.6	6.2
326–335	330	20.05	.0288	141.6	6.50	6.7	6.3
336–345	340	20.92	.0290	143.6	6.60	6.8	6.4
346–355	350	21.80	.0293	145.6	6.70	6.9	6.5
356–365	360	22.67	.0296	147.7	6.80	7.0	6.6
366–375	370	23.54	.0299	149.7	6.89	7.1	6.7
376–385	380	24.42	.0301	151.7	6.98	7.2	6.8
386–395	390	25.29	.0304	153.8	7.07	7.3	6.9
396–405	400	26.17	.0307	155.8	7.16	7.4	6.9
406–415	410	27.04	.0310	157.8	7.24	7.5	7.0
416–425	420	27.91	.0312	159.9	7.33	7.6	7.1
426–435	430	28.79	.0315	161.9	7.41	7.6	7.2
436–445	440	29.66	.0317	163.7	7.49	7.7	7.3
446–455	450	30.54	.0318	164.9	7.61	7.8	7.4
456–465	460	31.41	.0319	166.0	7.73	8.0	7.5
466–475	470	32.28	.0319	167.1	7.84	8.1	7.6
476–485	480	33.16	.0320	168.3	7.95	8.2	7.7
486–495	490	34.03	.0320	169.4	8.06	8.3	7.8
496–505	500	34.90	.0321	170.5	8.17	8.4	7.9
506–515	510	35.78	.0322	171.7	8.28	8.5	8.0
516–525	520	36.65	.0322	172.8	8.39	8.6	8.2
526–535	530	37.53	.0323	173.9	8.49	8.7	8.3
536–545	540	38.40	.0323	175.1	8.60	8.8	8.4
546–555	550	39.27	.0324	176.2	8.70	9.0	8.5
556–565	560	40.15	.0325	177.3	8.80	9.1	8.6
566–575	570	41.02	.0325	178.5	8.90	9.2	8.7
576–585	580	41.90	.0326	179.6	9.00	9.3	8.8
586–595	590	42.77	.0327	180.8	9.10	9.4	8.9
596–605	600	43.64	.0327	181.9	9.19	9.5	8.9
606–615	610	44.52	.0328	183.0	9.29	9.5	9.0
616–625	620	45.39	.0328	184.2	9.38	9.6	9.1
626–635	630	46.27	.0329	185.3	9.47	9.7	9.2
636–645	640	47.14	.0330	186.4	9.56	9.8	9.3
646–655	650	48.01	.0330	187.6	9.65	9.9	9.4
565–665	660	48.89	.0331	188.7	9.74	10.0	9.5
666–675	670	49.76	.0332	189.8	9.83	10.1	9.6
676–685	680	50.64	.0332	191.0	9.92	10.2	9.7
686–695	690	51.51	.0333	192.1	10.01	10.3	9.8
696–705	700	52.38	.0333	193.2	10.09	10.4	9.8
706–715	710	53.26	.0334	194.4	10.17	10.4	9.9

FIGURE F98–9—Continued

Loaded vehicle mass (kg)	Equivalent inertial mass (kg)	Force coefficients		Force at 65 km/h (nt)	70 to 60 km/h coastdown calibration times		
		A (nt)	C (nt/(km/h)^2)		Target time (sec)	Allowable tolerance	
						Longest time (sec)	Shortest time (sec)
716–725	720	54.13	.0335	195.5	10.26	10.5	10.0
726–735	730	55.01	.0335	196.6	10.34	10.6	10.1
736–745	740	55.88	.0336	197.8	10.42	10.7	10.2
746–755	750	56.75	.0336	198.9	10.50	10.8	10.2
756–765	760	57.63	.0337	200.1	10.58	10.9	10.3
766–775	770	58.50	.0338	201.2	10.66	10.9	10.3
776–785	780	59.38	.0338	203.3	10.74	11.0	10.4
786–795	790	60.25	.0339	204.5	10.82	11.1	10.5
796–805	800	61.12	.0339	205.6	10.91	11.2	10.6
806–815	810	62.00	.0340	206.7	10.99	11.3	10.7
816–825	820	62.87	.0341	207.9	11.07	11.4	10.8
826–835	830	63.75	.0341	209.0	11.15	11.5	10.8
836–845	840	64.62	.0342	210.1	11.24	11.5	10.9
846–855	850	65.49	.0343	211.3	11.32	11.6	11.0
856–865	860	66.37	.0343	212.4	11.40	11.7	11.1
866–873	870	67.24	.0344	213.5	11.48	11.8	11.2

(c) The dynamometer shall be adjusted to reproduce the specified road load as determined by the most recent calibration. Alternatively, the actual vehicle road load can be measured and duplicated:

(1) Make at least 5 replicate coastdowns in each direction from 70 to 60 km/h on a smooth, level track under balanced wind conditions. The driver must have a mass of 80 ±10 kg and be in the normal driving position. Record the coastdown time.

(2) Average the coastdown times. Adjust the dynamometer load so that the coastdown time is duplicated with the vehicle and driver on the dynamometer.

(3) Alternate procedures may be used if approved in advance by the Administrator.

[63 FR 11849, Mar. 11, 1998]

§ 86.530–78 Test sequence, general requirements.

(a) Ambient temperature levels encountered by the test vehicle throughout the test sequence shall not be less than 20 °C (68 °F) nor more than 30 °C (86 °F). The vehicle shall be approximately level during the emission test to prevent abnormal fuel distribution.

(b) [Reserved]

§ 86.531–78 Vehicle preparation.

(a) The manufacturer shall provide additional fittings and adapters, as required by the Administrator * * *, such as * * * to accommodate a fuel drain at the lowest point possible in the tank(s) as installed on the vehicle and to provide for exhaust sample collection.

(b) [Reserved]

§ 86.532–78 Vehicle preconditioning.

(a) The vehicle shall be moved to the test area and the following operations performed:

(1) The fuel tank(s) shall be drained through the provided fuel tank(s) drain(s) and charged with the specified test fuel, § 86.513, to half the tank(s) capacity.

(2) The vehicle shall be placed, either by being driven or pushed, on a dynamometer and operated through one Urban Dynamometer Driving Schedule test procedure (see § 86.515 and appendix I). The vehicle need not be cold, and may be used to set dynamometer horsepower.

(b) Within five (5) minutes of completion of preconditioning, the vehicle shall be removed from the dynamometer and may be driven or pushed to the soak area to be parked. The vehicle shall be stored for not less than the following times prior to the cold start exhaust test.

	Hours
Class I	6
Class II	8
Class III	12

In no case shall the vehicle be stored for more than 36 hours prior to the cold start exhaust test.

§86.535–90 Dynamometer procedure.

(a) The dynamometer run consists of two tests, a ''cold'' start test and a ''hot'' start test following the ''cold'' start by 10 minutes. Engine startup (with all accessories turned off), operation over the driving schedule, and engine shutdown make a complete cold start test. Engine startup and operation over the first 505 seconds of the driving schedule complete the hot start test. The exhaust emissions are diluted with ambient air and a continuously proportional sample is collected for analysis during each phase. The composite samples collected in bags are analyzed for hydrocarbons, carbon monoxide, carbon dioxide, and, optionally, for oxides of nitrogen. A parallel sample of the dilution air is similarly analyzed for hydrocarbon, carbon monoxide, carbon dioxide, and, optionally, for oxides of nitrogen. Methanol and formaldehyde samples (exhaust and dilution air) are collected and analyzed for methanol-fueled vehicles (a single dilution air formaldehyde sample covering the total time of the test may be collected in place of individual test phases).

(b) [Reserved]

(c) The vehicle speed, as measured from the dynamometer roll, shall be used. A speed *vs.* time recording, as evidence of dynamometer test validity, shall be supplied on request of the Administrator.

(d) Practice runs over the prescribed driving schedule may be performed at test points, provided an emission sample is not taken, for the purpose of finding the minimum throttle action to maintain the proper speed-time relationship, or to permit sampling system adjustments.

(e) The drive wheel tires must be inflated to the manufacturer's recommended pressure, ±15 kPa (±2.2 psi). The drive wheel tire pressure shall be reported with the test results.

(f) If the dynamometer has not been operated during the two-hour period immediately preceding the test, it shall be warmed up for 15 minutes by operating at 50 km/h (31 mph) using a nontest vehicle, or as recommended by the dynamometer manufacturer.

(g) If the dynamometer horsepower must be adjusted manually, it shall be set within one hour prior to the exhaust emissions test phase. The test vehicle shall not be used to make this adjustment. Dynamometers using automatic control of preselectable power settings may be set anytime prior to the beginning of the emissions test.

(h) The driving distance, as measured by counting the number of dynamometer roll revolutions, shall be determined for the transient cold start, stabilized cold start, and transient hot start phases of the test.

[54 FR 14551, Apr. 11, 1989]

§86.536–78 Engine starting and restarting.

(a)(1) The engine shall be started according to the manufacturer's recommended starting procedures. The initial 20 second idle period shall begin when the engine starts.

(2) *Choke operation.* (i) Vehicles equipped with automatic chokes shall be operated according to the instructions in the manufacturer's operating instructions or owner's manual including choke setting and ''kick-down'' from cold fast idle. The transmission shall be placed in gear 15 seconds after the engine is started. If necessary, braking may be employed to keep the drive wheels from turning.

(ii) Vehicles equipped with manual chokes shall be operated according to the manufacturer's operating instructions or owner's manual. Where times are provided in the instructions, the Administrator may specify the specific point for operation, within 15 seconds of the recommended time.

(3) The operator may use the choke, throttle etc. where necessary to keep the engine running.

(4) If the manufacturer's operating instructions or owner's manual do not specify a warm engine starting procedure, the engine (automatic and manual choke engines) shall be started by

opening the throttle about half way and cranking the engine until it starts.

(b) [Reserved]

(c) If, during the cold start, the vehicle does not start after 10 seconds of cranking, or ten cycles of the manual starting mechanism, cranking shall cease and the reason for failure to start determined. The revolution counter on the constant volume sampler shall be turned off and the sample solenoid valves placed in the ''standby'' position during this diagnostic period. In addition, either the CVS blower shall be turned off or the exhaust tube disconnected from the tailpipe during the diagnostic period.

(1) If failure to start is an operational error, the vehicle shall be rescheduled for testing from a cold start. If failure to start is caused by vehicle malfunction, corrective action (following the unscheduled maintenance provisions) of less than 30 minutes duration may be taken and the test continued. The sampling system shall be reactivated at the same time cranking is started. When the engine starts, the driving schedule timing sequence shall begin. If failure to start is caused by vehicle malfunction and the vehicle cannot be started, the test shall be voided, the vehicle removed from the dynamometer, corrective action taken (following the unscheduled maintenance provisions), and the vehicle rescheduled for test. The reason for the malfunction (if determined) and the corrective action taken shall be reported.

(2) If the vehicle does not start during the hot start after ten seconds of cranking, or ten cycles of the manual starting mechanism, cranking shall cease, the test shall be voided, the vehicle removed from the dynamometer, corrective action taken in accordance with § 86.428 or § 86.429, and the vehicle rescheduled for test. The reason for the malfunction (if determined) and the corrective action taken shall be reported.

(d) If the engine ''false starts'', the operator shall repeat the recommended starting procedure (such as resetting the choke, etc.)

(e) *Stalling.* (1) If the engine stalls during an idle period, the engine shall be restarted immediately and the test continued. If the engine cannot be started soon enough to allow the vehicle to follow the next acceleration as prescribed, the driving schedule indicator shall be stopped. When the vehicle restarts, the driving schedule indicator shall be reactivated.

(2) If the engine stalls during some operating mode other than idle, the driving schedule indicator shall be stopped, the vehicle shall then be restarted and accelerated to the speed required at that point in the driving schedule and the test continued. During acceleration to this point, shifting shall be performed in accordance with § 86.528.

(3) If the vehicle will not restart within one minute, the test shall be voided, the vehicle removed from the dynamometer, corrective action taken, and the vehicle rescheduled for test. The reason for the malfunction (if determined) and the corrective action taken shall be reported.

§ 86.537–90 Dynamometer test runs.

(a) The vehicle shall be allowed to stand with the engine turned off (see § 86.532 for required time). The vehicle shall be stored prior to the emission test in such a manner that precipitation (*e.g.*, rain or dew) does not occur on the vehicle. The complete dynamometer test consists of a cold start drive of 12.0 km (7.5 mi), (10.9 km (6.8 mi) for Class I motorcycles) and simulates a hot start drive of 12.0 km (7.5 mi), (10.9 km (6.8 mi) for Class I motorcycles). The vehicle is allowed to stand on the dynamometer during the 10-minute period between the cold and hot start tests. The cold start is divided into two periods. The first period, representing the cold start ''transient'' phase, terminates at the end of the deceleration which is scheduled to occur at 505 seconds of the driving schedule. The second period, representing the ''stabilized'' phase, consists of the remainder of the driving schedule including engine shutdown. The hot start test similarly consists of two periods. The period, representing the hot start ''transient'' phase, terminates at the same point in the driving schedule at the first point of the cold start test. The second period of the hot start test, ''stabilized'' phase, is assumed to be identical to the second period of the

cold start test. Therefore, the hot start test terminates after the first period (505 seconds) is run.

(b) The following steps shall be taken for each test:

(1) Place drive wheel of vehicle on dynamometer without starting engine.

(2) Activate vehicle cooling fan.

(3) For all vehicles, with the sample selector valves in the ''standby'' position connect evacuated sample collection bags to the dilute exhaust and dilution air sample collection systems.

(4) For methanol-fueled vehicles, with the sample selector valves in the ''standby'' position, insert fresh sample collection impingers into the methanol sample collection system, fresh impingers or a fresh cartridge into the formaldehyde sample collection system and fresh impingers (or a single cartridge for formaldehyde) into the dilution air sample collection systems for methanol and formaldehyde (background measurements of methanol and formaldehyde may be omitted and concentrations assumed to be zero for calculations in §86.544).

(5) Start the CVS (if not already on), the sample pumps and the temperature recorder. (The heat exchanger of the constant volume sampler, if used, methanol-fueled vehicle hydrocarbon analyzer and sample lines should be preheated to their respective operating temperatures before the test begins.)

(6) Adjust the sample flow rates to the desired flow rate and set the gas flow measuring devices to zero.

(i) For gaseous bag samples (except hydrocarbon samples), the minimum flow rate is 0.17 cfm (0.08 l/s).

(ii) For hydrocarbon samples, the minimum FID (or HFID in the case of methanol-fueled vehicles) flow rate is 0.066 cfm (0.031 l/s).

(iii) For methanol samples, the flow rates shall be set such that the system meets the design criteria of §86.509. For samples in which the concentration in the primary impinger exceeds 0.5 mg/l, it is recommended that the mass of methanol collected in the secondary impinger not exceed ten percent of the total mass collected. For samples in which the concentration in the primary impinger does not exceed 0.5 mg/l, secondary impingers do not need to be analyzed.

(iv) For formaldehyde samples, the flow rates shall be set such that the system meets the design criteria of §86.509. For impinger samples in which the concentration of formaldehyde in the primary impinger exceeds 0.1 mg/l, it is recommended that the mass of formaldehyde collected in the secondary impinger not exceed ten percent of the total mass collected. For samples in which the concentration in the primary impinger does not exceed 0.1 mg/l, secondary impingers do not need to be analyzed.

(7) Attach the flexible exhaust tube to the vehicle tailpipe(s).

(8) Start the gas flow measuring device, position the sample selector valves to direct the sample flow into the ''transient'' exhaust sample bag, the ''transient'' methanol exhaust sample, the ''transient'' formaldehyde exhaust sample, the ''transient'' dilution air sample bag, the ''transient'' methanol dilution air sample and the ''transient'' formaldehyde dilution air sample, turn the key on, and start cranking the engine.

(9) Fifteen seconds after the engine starts, place the transmission in gear.

(10) Twenty seconds after the engine starts, begin the initial vehicle acceleration of the driving schedule.

(11) Operate the vehicle according to the Urban Dynamometer Driving Schedule (§86.515).

(12) At the end of the deceleration which is scheduled to occur at 505 seconds, simultaneously switch the sample flows from the ''transient'' bags and samples to ''stabilized'' bags and samples, switch off gas flow measuring device No. 1 and, start gas flow measuring device No. 2. Before the acceleration which is scheduled to occur at 510 seconds, record the measured roll or shaft revolutions and reset the counter or switch to a second counter. As soon as possible, transfer the ''stabilized'' exhaust and dilution air samples to the analytical system and process the samples according to §86.540, obtaining a stabilized reading of the exhaust bag sample on all analyzers within 20 minutes of the end of the sample collection phase of the test. Obtain methanol and formaldehyde sample analyses, if applicable, within 24 hours of the end of the sample period. (If it is not possible to

perform analysis on the methanol and formaldehyde samples within 24 hours, the samples should be stored in a dark cold (4–10 °C) environment until analysis. The samples should be analyzed within fourteen days.)

(13) Turn the engine off 2 seconds after the end of the last deceleration (at 1,369 seconds).

(14) Five seconds after the engine stops running, simultaneously turn off gas flow measuring device No. 2 and position the sample selector valves to the ''standby'' position (and open the valves isolating particulate filter No. 1, if applicable). Record the measured roll or shaft revolutions (both gas meter or flow measurement instrumentation readings) and re-set the counter. As soon as possible, transfer the ''stabilized'' exhaust and dilution air samples to the analytical system and process the samples according to § 86.540, obtaining a stabilized reading of the exhaust bag sample on all analyzers within 20 minutes of the end of the sample collection phase of the test. Obtain methanol and formaldehyde sample analyses, if applicable, within 24 hours of the end of the sample period. (If it is not possible to perform analysis on the methanol and formaldehyde samples within 24 hours, the samples should be stored in a dark cold (4–10 °C) environment until analysis. The samples should be analyzed within fourteen days.)

(15) Immediately after the end of the sample period, turn off the cooling fan.

(16) Turn off the CVS or disconnect the exhaust tube from the tailpipe(s) of the vehicle.

(17) Repeat the steps in paragraph (b)(2) through (11) of this section for the hot start test, except only two evacuated sample bags, two methanol sample impingers, and two formaldehyde sample impingers are required. The step in paragraph (b)(8) of this section shall begin between 9 and 11 minutes after the end of the sample period for the cold start test.

(18) At the end of the deceleration which is scheduled to occur at 505 seconds, simultaneously turn off gas flow measuring device No. 1 and position the sample selector valve to the ''standby'' position. (Engine shutdown is not part of the hot start test sample period.) Record the measured roll or shaft revolutions.

(19) As soon as possible, transfer the hot start ''transient'' exhaust and dilution air bag samples to the analytical system and process the samples according to § 86.540 obtaining a stabilized reading of the bag exhaust sample on all analyzers within 20 minutes of the end of the sample collection phase of the test. Obtain methanol and formaldehyde sample analyses, if applicable, within 24 hours of the end of the sample period (if it is not possible to perform analysis on the methanol and formaldehyde samples within 24 hours, the samples should be stored in a dark, cold (~ 0 °C) environment until analysis).

(20) Disconnect the exhaust tube from the vehicle tailpipe(s) and remove the vehicle from dynamometer.

(21) The CVS or CFV may be turned off, if desired.

(22) Continuous monitoring of exhaust emissions will not normally be allowed. Specific written approval must be obtained from the Administrator for continuous monitoring of exhaust emissions.

[54 FR 14551, Apr. 11, 1989, as amended at 60 FR 34357, June 30, 1995]

§ 86.540–90 Exhaust sample analysis.

The following sequence of operations shall be performed in conjunction with each series of measurements:

(a) For CO, CO_2, gasoline-fueled, natural gas-fueled, liquefied petroleum gas-fueled and methanol-fueled motorcycle HC and, if appropriate, NO_X:

(1) Zero the analyzers and obtain a stable zero reading. Recheck after tests.

(2) Introduce span gases and set instrument gains. In order to avoid errors, span and calibrate at the same flow rates used to analyze the test sample. Span gases should have concentrations equal to 75 to 100 percent of full scale. If gain has shifted significantly on the analyzers, check the calibrations. Show actual concentrations on chart.

(3) Check zeros; repeat the procedure in paragraphs (a)(1) and (2) of this section if required.

(4) Check flow rates and pressures.

(5) Measure HC, CO, CO_2, and, if appropriate, NO_X, concentrations of samples.

(6) Check zero and span points. If difference is greater than 2 percent of full scale, repeat the procedure in paragraphs (a) (1) through (5) of this section.

(b) For CH_3OH (methanol-fueled vehicles), introduce test samples into the gas chromatograph and measure the concentration. This concentration is C_{MS} in the calculations.

(c) For HCHO (methanol-fueled vehicles), introduce test samples into the high pressure liquid chromatograph and measure the concentration of formaldehyde as a dinitropheylhydrazine derivative in acetonitrile. This concentration is C_{FS} in the calculations.

[54 FR 14552, Apr. 11, 1989, as amended at 59 FR 48515, Sept. 21, 1994; 60 FR 34357, June 30, 1995]

§86.542–90 Records required.

The following information shall be recorded with respect to each test:

(a) Test number.

(b) System or device tested (brief description).

(c) Date and time of day for each part of the test schedule.

(d) Instrument operator.

(e) Driver or operator.

(f) *Vehicle:* Make, Vehicle identification number, Model year, Transmission type, Odometer reading at initiation of preconditioning, Engine displacement, Engine family, Emission control system, Recommended idle RPM, Nominal fuel tank capacity, Inertial loading, Actual curb mass recorded at 0 kilometers, and Drive wheel tire pressure.

(g) *Dynamometer serial number:* As an alternative to recording the dynamometer serial number, a reference to a vehicle test cell number may be used, with the advance approval of the Administrator, provided the test cell records show the pertinent instrument information.

(h) All pertinent instrument information such as tuning-gain-serial number-detector number-range. As an alternative, a reference to a vehicle test cell number may be used, with the advance approval of the Administrator, provided test cell calibration records show the pertinent instrument information.

(i) Recorder Charts: Identify zero, span, exhaust gas, and dilution air sample traces.

(j) Test cell barometric pressure, ambient temperature and humidity.

NOTE: A central laboratory barometer may be used; *Provided,* that individual test cell barometric pressures are shown to be within ±0.1 percent of the barometric pressure at the central barometer location.

(k) [Reserved]

(l) Pressure of the mixture of exhaust and dilution air entering the CVS metering device, the pressure increase across the device, and the temperature at the inlet. The temperature may be recorded continuously or digitally to determine temperature variations.

(m) The number of revolutions of the positive displacement pump accumulated during each test phase while exhaust samples are being collected. The number of standard cubic meters metered by a critical flow venturi during each test phase would be the equivalent record for a CFV–CVS.

(n) The humidity of the dilution air.

NOTE: If conditioning columns are not used (see §§86.522 and 86.544) this measurement can be deleted. If the conditioning columns are used and the dilution air is taken from the test cell, the ambient humidity can be used for this measurement.

(o) The driving distance for each of the three phases of test, calculated from the measured roll or shaft revolutions.

(p) Additional required records for methanol-fueled vehicles:

(1) Specification of the methanol fuel, or fuel mixtures, used during testing.

(2) Volume of sample passed through the methanol sampling system and the volume of deionized water in each impinger.

(3) The methanol calibration information from the GC standards.

(4) The concentration of the GC analyses of the test samples (methanol).

(5) Volume of sample passed through the formaldehyde sampling system.

(6) The formaldehyde calibration information from the HPLC standards.

(7) The concentration of the HPLC analysis of the test sample (formaldehyde).

(q) *Additional required records for natural gas-fueled vehicles.* Composition, including all carbon containing compounds; e.g. CO_2, of the natural gas-fuel used during the test. C_1 and C_2 compounds shall be individually reported. C_3 and heavier hydrocarbons and C_6 and heavier compounds may be reported as a group.

(r) *Additional required records for liquefied petroleum gas-fueled vehicles.* Composition of the liquefied petroleum gas-fuel used during the test. Each hydrocarbon compound present, through C_4 compounds, shall be individually reported. C_5 and heavier hydrocarbons may be reported as a group.

[54 FR 14553, Apr. 11, 1989, as amended at 59 FR 48515, Sept. 21, 1994; 60 FR 34357, June 30, 1995]

§ 86.544–90 Calculations; exhaust emissions.

The final reported test results, with oxides of nitrogen being optional, shall be computed by use of the following formula: (The results of all emission tests shall be rounded, using the ''Rounding-Off Method'' specified in ASTM E 29–67, to the number of places to the right of the decimal point indicated by expressing the applicable standard to three significant figures.)

$$\text{(a)} Y_{wm} = 0.43\left(\frac{Y_{ct}+Y_s}{D_{ct}+D_s}\right)+0.57\left(\frac{Y_{ht}+Y_s}{D_{ht}+D_s}\right)$$

Where:

(1) Y_{wm} = Weighted mass emissions of CO_2Or of each pollutant (*i.e.*, HC, CO, or NO_X) in grams per vehicle kilometer and if appropriate, the weighted carbon mass equivalent of total hydrocarbon equivalent, in grams per vehicle kilometer.

(2) Y_{ct} = Mass emissions as calculated from the ''transient'' phase of the cold-start test, in grams per test phase.

(3) Y_{ht} = Mass emissions as calculated from the ''transient'' phase of the hot-start test, in grams per test phase.

(4) Y_s = Mass emissions as calculated from the ''stabilized'' phase of the cold-start test, in grams per test phase.

(5) D_{ct} = The measured driving distance from the ''transient'' phase of the cold-start test, in kilometers.

(6) D_{ht} = The measured driving distance from the ''transient'' phase of the hot-start test, in kilometers.

(7) D_s = The measured driving distance from the ''stabilized'' phase of the cold-start test, in kilometers.

(b) The mass of each pollutant for each phase of both the cold-start test and the hot-start test is determined from the following:

(1) Hydrocarbon mass:

$HC_{mass} = V_{mix} \times Density_{HC} \times (HC_{conc}/1{,}000{,}000)$

(2) Oxides of nitrogen mass:

$NOx_{mass} = V_{mix} \times Density_{NO2} \times K_H \times (NOx_{conc}/1{,}000{,}000)$

(3) Carbon monoxide mass:

$CO_{mass} = V_{mix} \times Density_{CO} \times (CO_{conc}/1{,}000{,}000)$

(4) Carbon dioxide mass:

$CO_{2mass} = V_{mix} \times Density_{CO2} \times (CO_{2conc}/100)$

(5) Methanol mass:

$CH_3OH_{mass} = V_{mix} \times Density_{CH3OH} \times (CH_3OH_{conc}/1{,}000{,}000)$

(6) Formaldehyde mass:

$HCHO_{mass} = V_{mix} \times Density_{HCHO} \times (HCHO_{conc}/1{,}000{,}000)$

(7) Total hydrocarbon equivalent:

(i) $THCE = HC_{mass} + 13.8756/32.042 \times (CH_3OH)_{mass} + 13.8756/30.0262 \times (HCHO)_{mass}$

(c) Meaning of symbols:

(1)(i) HC_{mass} = Hydrocarbon emissions, in grams per test phase.

(ii) $Density_{HC}$=Density of HC in exhaust gas.

(A) *For gasoline-fuel;* $Density_{HC}$=576.8 g/m^3-carbon atom (16.33 g/ft^3-carbon atom), assuming an average carbon to hydrogen ratio of 1:1.85, at 20 °C (68 °F) and 101.3 kPa (760 mm Hg) pressure.

(B) *For natural gas and liquefied petroleum gas-fuel;* $Density_{HC}$=41.57(12.011+H/C(1.008)) g/m^3-carbon atom (1.1771(12.011+H/C(1.008)) g/ft^3-carbon atom) where H/C is the hydrogen to carbon ratio of the hydrocarbon components of test fuel, at 20 °C (68 °F) and 101.3 kPa (760mm Hg) pressure.

(iii)(A) HC_{conc} = Hydrocarbon concentration of the dilute exhaust sample corrected for background, in ppm carbon equivalent, *i.e.*, equivalent propane x 3.

(B) $HC_{conc} = HC_e - HC_d(1 - (1/DF))$

Where:

(iv)(A) HC_e = Hydrocarbon concentrations of the dilute exhaust sample as

measured, in ppm carbon equivalent (propane ppm x 3).

(B) $HC_e = FIDHC_e - (r)C_{CH3OHe}$

(v) FID HC_e=Concentration of hydrocarbon (plus methanol if methanol-fueled motorcycle is tested) in dilute exhaust as measured by the FID ppm carbon equivalent.

(vi) r = FID response to methanol.

(vii) C_{CH30He} = Concentration of methanol in dilute exhaust as determined from the dilute exhaust methanol sample, ppm carbon.

(viii)(A) HC_d = Hydrocarbon concentration of the dilution air as measured, ppm carbon equivalent.

(B) $HC_d = FID\ HC_d - (r)C_{CH30Hd}$

(ix) FID HC_d=Concentration of hydrocarbon (plus methanol if methanol-fueled motorcycle is tested) in dilution air as measured by the FID, ppm carbon equivalent.

(x) C_{CH3OHd} = Concentration of methanol in dilution air as determined from dilution air methanol sample, ppm carbon.

(2)(i) NOx_{mass} = Oxides of nitrogen emissions, grams per test phase.

(ii) $Density_{N02}$ = Density of oxides of nitrogen in the exhaust gas, assuming they are in the form of nitrogen dioxide, 1913 g/m³ (54.16 g/ft³), at 20 °C (68 °F) and 101.3 kPa (760 mm Hg) pressure.

(iii)(A) NOx_{conc} = Oxides of nitrogen concentration of the dilute exhaust sample corrected for background, ppm.

(B) $NOx_{conc} = NOx_e - NOx_d(1 - (1/DF))$

Where:

(iv) NOx_e = Oxides of nitrogen concentration of the dilute exhaust sample as measured, ppm.

(v) NOx_d = Oxides of nitrogen concentration of the dilution air as measured, ppm.

(3)(i) CO_{mass} = Carbon monoxide emissions, in grams per test phase.

(ii) $Density_{CO}$ = Density of carbon monoxide, 1164 g/m³ (32.97 g/ft³), at 20 °C (68 °F) and 101.3 kPa (760 mm Hg) pressure.

(iii)(A) CO_{conc} = Carbon monoxide concentration of the dilute exhaust sample corrected for background, water vapor, and CO_2 extraction, ppm.

(B) $CO_{conc} = CO_e - CO_d(1 - (1/DF))$

Where:

(iv)(A) CO_e = Carbon monoxide concentration of the dilute exhaust sample volume corrected for water vapor and carbon dioxide extraction, in ppm.

(B) $CO_e = (1 - 0.01925CO_{2e} - 0.000323R)CO_{em}$ for gasoline-fueled vehicles with hydrogen to carbon ratio of 1.85:1

(C) $CO_e=[1 - (0.01+0.005HCR)\ CO_{2e} - 0.000323R]CO_{em}$ for methanol-fueled, natural gas-fueled or liquefied petroleum gas-fueled motorcycles, where HCR is hydrogen to carbon ratio as measured for the fuel used.

(v) CO_{em} = Carbon monoxide concentration of the dilute exhaust sample as measured, ppm

(vi) CO_{2e} = Carbon dioxide concentration of the dilute exhaust sample, pct.

(vii) R = Relative humidity of the dilution air, pct (*see* § 86.542(n)).

(viii)(A) CO_d = Carbon monoxide concentration of the dilution air corrected for water vapor extraction, ppm.

(B) $CO_d = (1 - 0.000323R)CO_{dm}$

Where:

(ix) CO_{dm} = Carbon monoxide concentration of the dilution air sample as measured, ppm.

NOTE: If a CO instrument which meets the criteria specified in § 86.511 is used and the conditioning column has been deleted, CO_{em} can be substituted directly for CO_e and CO_{dm} must be substituted directly for CO_d.

(4)(i) CO_{2mass} = Carbon dioxide emissions, grams per test phase.

(ii) $Density_{C02}$ = Density of carbon dioxide, 1830 g/m³ (51.81 g/ft³), at 20 °C (68 °F) and 101.3 kPa (760 mm Hg) pressure.

(iii)(A) CO_{2conc} = carbon dioxide concentration of the dilute exhaust sample corrected for background, in percent.

(B) $CO_{2conc} = CO_{2e} - CO_{2d}(1 - 1/DF)$

Where:

(iv) CO_{2d} = Carbon dioxide concentration of the dilution air as measured, in percent.

(5)(i) CH_3OH_{mass} = Methanol emissions corrected for background, grams per test phase.

(ii) $Density_{CH3OH}$ = Density of methanol is 1332 g/m³ (37.71 g/ft³), at 20 °C (68 °F) and 101.3 kPa (760 mm Hg) pressure.

(iii)(A) CH_3OH_{conc} = Methanol concentration of the dilute exhaust corrected for background, ppm.

(B) $CH_3OH_{conc} = C_{CH3OHe} - C_{CH3OHd}(1 - (1/DF))$

Where:

(iv)(A) C_{CH3OHe}=Methanol concentration in the dilute exhaust, ppm.

(B)

$$C_{CH3OHe} = \frac{3.813 \times 10^{-2} \times T_{EM}\left[\left(C_{S1} \times AV_{S1}\right) + \left(C_{S2} \times AV_{S2}\right)\right]}{P_B \times V_{EM}}$$

(v)(A) C_{CH3OHd}=Methanol concentration in the dilution air, ppm.

(B)

$$C_{CH3OHd} = \frac{3.813 \times 10^{-2} \times T_{DM}\left[\left(C_{D1} \times AV_{D1}\right) + \left(C_{D2} \times AV_{D2}\right)\right]}{P_B \times V_{DM}}$$

(vi) T_{EM}=Temperature of methanol sample withdrawn from dilute exhaust, °R.

(vii) T_{DM}=Temperature of methanol sample withdrawn from dilution air, °R.

(viii) P_B=Barometric pressure during test, mm Hg.

(ix) V_{EM}=Volume of methanol sample withdrawn from dilute exhaust, ft^3.

(x) V_{DM}=Volume of methanol sample withdrawn from dilution air, ft^3.

(xi) C_s=GC concentration of sample drawn from dilute exhaust, µg/ml.

(xii) C_D=GC concentration of sample drawn from dilution air, µg/ml.

(xiii) AV_s=Volume of absorbing reagent (deionized water) in impinger through which methanol sample from dilute exhaust is drawn, ml.

(xiv) AV_D=Volume of absorbing reagent (deionized water) in impinger through which methanol sample from dilution air is drawn, ml.

(xv) 1=first impinger.

(xvi) 2=second impinger.

(6)(i) $HCHO_{mass}$ = Formaldehyde emissions corrected for background, grams per test phase.

(ii) $Density_{HCHO}$ = Density of formaldehyde is 1249 g/m^3 (35.36 g/ft^3), at 20 °C (68 °F) and 101.3 kPa (760 mm Hg) pressure.

(iii)(A) $HCHO_{conc}$ = Formaldehyde concentration of the dilute exhaust corrected for background, ppm.

(B) $HCHO_{conc} = C_{HCHOe} - C_{HCHOd}\ (1 - (1/DF))$

Where:

(iv)(A) C_{HCHOe} = Formaldehyde concentration in dilute exhaust, ppm.

(B)

$$C_{HCHO_e} = \frac{4.069 \times 10^{-2} \times C_{FDE} \times V_{AE} \times Q \times T_{EF}}{V_{SE} \times P_B}$$

(v)(A) C_{HCHOd} = Formaldehyde concentration in dilution air, ppm.

(B)

$$C_{HCHOd} = \frac{4.069 \times 10^{-2} \times C_{FDA} \times V_{AA} \times Q \times T_{DF}}{V_{SA} \times P_B}$$

(vi) C_{FDE} = Concentration of DNPH derivative of formaldehyde from dilute exhaust sample in sampling solution, µg/ml.

(vii) V_{AE} = Volume of sampling solution for dilute exhaust formaldehyde sample, ml.

(viii)(A) Q = Ratio of molecular weights of formaldehyde to its DNPH derivative.

(B) Q = 0.1429

(ix) T_{EF} = Temperature of formaldehyde sample withdrawn from dilute exhaust, °R.

(x) V_{SE} = Volume of formaldehyde sample withdrawn from dilute exhaust, ft^3.

(xi) P_B = Barometric pressure during test, mm Hg.

(xii) C_{FDA} = Concentration of DNPH derivative of formaldehyde from dilution air sample in sampling solution, µg/ml.

(xiii) V_{AA} = Volume of sampling solution for dilution air formaldehyde sample, ml.

(xiv) T_{DF} = Temperature of formaldehyde sample withdrawn from dilution air, °R.

(xv) V_{SA} = Volume of formaldehyde sample withdrawn from dilution air, ft^3.

(7)(i) DF = $13.4/[CO_{2e} + (HC_e + CO_e)10^{-4}]$ for gasoline-fueled vehicles.

(ii) For methanol-fueled, natural gas-fueled or liquefied petroleum gas-fueled motorcycles, where fuel composition is $C_x H_y O_z$ as measured, or calculated, for the fuel used (for natural gas and liquefied petroleum gas-fuel, Z=0):

$$DF = \frac{(100)\dfrac{x}{(x + y/2 + 3.76)(x + y/2 - z/2)}}{CO_{2e} + (HC_e + CO_e + CH_3OH_e = HCHO_e) \times 10^{-4}}$$

(iii)(A) V_{mix} = Total dilute exhaust volume in cubic meters per test phase corrected to standard conditions (293 °K (528 °R) and 101.3 kPa (760 mm Hg)).

(B)

$$V_{mix} = \frac{V_o \times N \times (P_B - P_i) \times 293}{101.3 \times T_p}$$

Where:

(iv) V_o = Volume of gas pumped by the positive displacement pump, in cubic meters per revolution. This volume is dependent on the pressure differential across the positive displacement pump. (See calibration techniques in § 86.519.)

(v) N = Number of revolutions of the positive displacement pump during the test phase while samples are being collected.

(vi) P_B = Barometric pressure, kPa.

(vii) P_i = Pressure depression below atmospheric measured at the inlet to the positive displacement pump, kPa.

(viii) T_p = Average temperature of dilute exhaust entering positive displacement pump during test while samples are being collected, °K.

(ix)(A) K_h = Humidity correction factor.

(B) $K_h = 1/[1 - 0.0329(H - 10.71)]$

Where:

(x)(A) H = Absolute humidity in grams of water per kilogram of dry air.

(B) $H = [(6.211)R_a \times P_d]/[P_B - (P_d \times R_a/100)]$

(xi) R_a = Relative humidity of the ambient air, pct.

(xii) P_d = Saturated vapor pressure, in kPa at the ambient dry bulb temperature.

(xiii) P_B = Barometric pressure, kPa.

(d) Sample calculation of mass emission values for gasoline-fueled vehicles with engine displacements equal to or greater than 170 cc (10.4 cu. in.):

(1) For the ''transient'' phase of the cold-start test, assume V_o = 0.0077934 m^3 per rev; N = 12,115; R = 20.5 pct; R_a = 20.5 pct; P_B = 99.05 kPa; P_d = 3.382 kPa; P_i = 9.851 kPa; T_p = 309.8 °K; HC_e = 249.75 ppm carbon equivalent; NOx_e = 38.30 ppm; CO_{em} = 311.23 ppm; CO_{2e} = 0.415 percent; HC_d = 4.90 ppm; NOx_d = 0.30 ppm; CO_{dm} = 8.13 ppm; CO_{2d} = 0.037 pct; D_{ct} = 5.650 km.

Then:

(i) V_{mix} = [(0.0077934)(12,115)(99.05–9.851)(293.15)]/ [(101.325)(309.8)] = 78.651 m^3 per test phase.

(ii) H = [(6.211)(20.5)(3.382)]/[(99.05) − (3.382)(20.5/100)] = 4.378 grams H_2O per kg dry air.

(iii) K_h = 1/[1 − 0.0329(4.378 − 10.71)] = 0 8276

(iv) CO_e = [1 − 0.01925(0.415) − 0.000323 (20.5)](311.23) = 306.68 ppm.

(v) CO_d = [1 − 0.000323(20.5)](8.13) = 8.08 ppm.

(vi) DF = 13.4/[0.415 + (249.75 + 306.68)10^{-4}] = 28.472

(vii) HC_{conc} = 249.75 − 4.90(1 − 1/28.472) = 245.02 ppm.

(viii) HC_{mass} = (78.651) (576.8) (245.02) 10^{-6} = 11.114 grams per test phase.

(ix) NOx_{conc} = 38.30 − 0.30(1 − 1/28.472) = 38.01 ppm.

(x) NOx_{mass} = (78.651)(1913)(38.01)(0.8276) × 10^{-6} = 4.733 grams per test phase.

(xi) CO_{conc} = 306.68 − 8.08 (1 − 1/28.472) = 298.88 ppm.

(xii) CO_{mass} = (78.651) (1164) (298.88) (10^{-6}) = 27.362 grams per test phase.

(xiii) CO_{2conc} = 0.415 − 0.037 (1 − 1/28.472) = 0.3793 percent.

(xiv) CO_{2mass} = (78.651)(1843)(0.3793)/100 = 549.81 grams per test phase.

(2) For the ''stabilized'' portion of the cold-start test, assume that similar calculations resulted in HC_{mass} = 7.184 grams per test phase; NOx_{mass} = 2.154 grams per test phase; CO_{mass} = 64.541 grams per test phase; and CO_{2mass} = 529.52 grams per test phase. D_s = 6.070 km.

(3) For the ''transient'' portion of the hot-start test, assume that similar calculations resulted in HC_{mass} = 6.122 grams per test phase; NOx_{mass} = 7.056 grams per test phase; CO_{mass} = 34.964 grams per test phase; and CO_{2mass} = 480.93 grams per test phase. D_{ht} = 5.660 km.

(4) For a 1978 motorcycle with an engine displacement equal to or greater than 170 cc (10.4 cu. in):

(i) HC_{wm} = 0.43 [(11.114 + 7.184)/(5.650 + 6.070)] + 0.57 [(6.122 + 7.184)/(5.660 + 6.070)] = 1.318 grams per vehicle kilometer.

(ii) NOx_{wm} = 0.43 [(4.733 + 2.154)/(5.650 + 6.070)] + 0.57 [(7.056 + 2.154)/(5.660 + 6.070)] = 0.700 gram per vehicle kilometer.

(iii) CO_{wm} = 0.43 [(27.362 + 64.541)/(5.650 + 6.070)] + 0.57 [(34.964 + 64.541)/(5.660 + 6.070)] = 8.207 grams per vehicle kilometer.

(iv) CO_{2wm} = 0.43 [(549.81 + 529.52)/(5.650 + 6.070)] + 0.57 [(480.93 + 529.52)/(5.660 + 6.070)] = 88.701 grams per vehicle kilometer.

[54 FR 14553, Apr. 11, 1989, as amended at 59 FR 48515, Sept. 21, 1994; 60 FR 34358, June 30, 1995]

Subpart G—Selective Enforcement Auditing of New Light-Duty Vehicles

SOURCE: 41 FR 31483, July 28, 1976, unless otherwise noted.

§ 86.601–84 Applicability.

For 1984 and later model year light-duty vehicles, all provisions of this subpart are applicable. The provisions of this subpart are not applicable to 1984 and later model year light-duty trucks.

(a) *Section numbering; construction.* (1) The model year of initial applicability is indicated by the two digits following the hyphen of the section number. A section remains in effect for subsequent model years until it is superseded.

(2) A section reference without a model year suffix shall be interpreted to be a reference to the section applicable to the appropriate model year.

(b) [Reserved]

(Secs. 206, 208(a) and 301(a), Clean Air Act, as amended, 42 U.S.C. 7525, 7542(a) and 7601(a))

[49 FR 69, Jan. 3, 1984. Redesignated at 54 FR 2122, Jan. 19, 1989, as amended at 62 FR 31234, June 6, 1997]

§86.602–84 Definitions.

(a) The definitions in this section apply to this subpart.

(b) As used in this subpart, all terms not defined herein have the meaning given them in the Act.

(1) *Acceptable Quality Level* (AQL) means the maximum percentage of failing vehicles that, for purposes of sampling inspection, can be considered satisfactory as a process average.

(2) *Axle Ratio* means all ratios within ±3% of the axle ratio specified in the configuration in the test order.

(3) *Configuration* means a subclassification of an engine-system combination on the basis of engine code, inertia weight class, transmission type and gear ratios, axle ratio, and other parameters which may be designated by the Administrator.

(4) *Test Sample* means the collection of vehicles of the same configuration which have been drawn from the population of vehicles of that configuration and which will receive exhaust emission testing.

(5) *Inspection Criteria* means the pass and fail numbers associated with a particular sampling plan.

(6) *Vehicle* means any new production light-duty vehicle as defined in subpart A of this part.

(7) *Test Vehicle* means a vehicle in a test sample.

(8) *In the Hands of the Manufacturer* means that vehicles are still in the possession of the manufacturer and have not had their bills of lading transferred to another person for the purpose of transporting.

[49 FR 48480, Dec. 12, 1984. Redesignated at 54 FR 2122, Jan. 19, 1989]

§86.602–97 Definitions.

Section 86.602–97 includes text that specifies requirements that differ from those specified in §86.602-84. Where a paragraph in §86.602–84 is identical and applicable to §86.602–97, this may be indicated by specifying the corresponding paragraph and the statement ''[Reserved]. For guidance see §86.602–84.''

(a) through (b)(8) [Reserved]. For guidance see §86.602–84.

(b)(9) *Executive Officer* means the Executive Officer of the California Air Resources Board or his or her authorized representative.

(10) *Executive Order* means the document the Executive Officer grants a manufacturer for an engine family that certifies the manufacturer has verified that the engine family complies with all applicable standards and requirements pursuant to Title 13 of the California Code of Regulations.

(11) *50-state engine family* means an engine family that meets both federal and California Air Resources Board motor vehicle emission control regulations and has received a federal certificate of conformity as well as an Executive Order.

[62 FR 31234, June 6, 1997]

§86.602–98 Definitions.

Section 86.602–98 includes text that specifies requirements that differ from §86.602–84. Where a paragraph in §86.602–84 is identical and applicable to §86.602–98, this may be indicated by specifying the corresponding paragraph and the statement ''[Reserved]. For guidance see §86.602–84.'' Where a corresponding paragraph of §86.602–84 is not applicable, this is indicated by the statement ''[Reserved].''.

(a) through (b)(2) [Reserved]. For guidance see §86.602–84.

(b)(3)(i) *Configuration*, when used for LDV exhaust emissions testing, means a subclassification of an engine-system combination on the basis of engine code, inertia weight class, transmission type and gear ratios, axle ratio, and other parameters which may be designated by the Administrator.

(ii) *Configuration*, when used for LDV refueling emissions testing, means a subclassification of an evaporative/refueling emission family on the basis of evaporative and refueling control system and other parameters which may be designated by the Administrator.

(4) *Test sample* means the collection of vehicles of the same configuration which have been drawn from the population of vehicles of that configuration and which will receive emission testing.

(b)(5) through (b)(8) [Reserved]. For guidance see §86.602–84.

(9) *Executive Officer* means the Executive Officer of the California Air Resources Board or his or her authorized representative.

(10) *Executive Order* means the document the Executive Officer grants a manufacturer for an engine family that certifies the manufacturer has verified that the engine family complies with all applicable standards and requirements pursuant to Title 13 of the California Code of Regulations.

(11) *50-state engine family* means an engine family that meets both federal and California Air Resources Board motor vehicle emission control regulations and has received a federal certificate of conformity as well as an Executive Order.

[59 FR 16300, Apr. 6, 1994, as amended at 62 FR 31234, June 6, 1997]

§ 86.603–88 Test orders.

(a) The Administrator will require any testing under this subpart by means of a test order addressed to the manufacturer.

(b) The test order will be signed by the Assistant Administrator for Air and Radiation or his designee. The test order will be delivered in person by an EPA Enforcement Officer to a company representative or sent by registered mail, return receipt requested, to the manufacturer's representative who signs the Application for Certification submitted by the manufacturer pursuant to the requirements of the applicable sections of subpart A of this part. Upon receipt of a test order, the manufacturer shall comply with all of the provisions of this subpart and instructions in the test order.

(c)(1) The test order will specify the vehicle configuration selected for testing, the time and location at which vehicles must be selected, and the procedure by which vehicles of the specified configuration must be selected. The test order may specify the number of vehicles to be selected per day and may include alternative configurations (primary, secondary, etc.) to be selected for testing in the event that vehicles of the first specified configuration are not available for testing because those vehicles are not being manufactured at the specified assembly plant, not being manufactured during the specified time, or not being stored at the specified assembly plant or associated storage facility. If total production of the specified vehicle configuration is less than the number specified in the test order, the manufacturer will select the actual number of vehicles produced per day. If the first specified configuration is not being manufactured at a rate of at least four vehicles per day over the expected duration of the audit, the Assistant Administrator for Air and Radiation or his designated representative may select vehicles of a primary alternate configuration for testing in lieu of the first specified configuration. Likewise, vehicles of a secondary alternate configuration may be selected in lieu of vehicles of the first specified configuration or primary alternate configuration. In addition, the test order may include other directions or information essential to the administration of the required testing.

(2) The following instructions are applicable to each test order issued under this subpart:

(i) The manufacturer shall make the following documents available to an EPA Enforcement Officer upon request:

(A) A properly filed and current Application for Certification following the format prescribed by the EPA for the appropriate model year; and

(B) A copy of the shop manual, dealer service bulletins, and pre-delivery inspection procedures for the configuration being tested.

(ii) Only one mechanic at a time per vehicle shall make authorized checks, adjustments, or repairs, unless a particular check, adjustment, or repair requires a second mechanic as indicated in the shop manual or dealer service bulletins.

(iii) A mechanic shall not perform any check, adjustment, or repair without an Enforcement Officer present unless otherwise authorized.

(iv) The manufacturer shall utilize only those tools and test equipment utilized by its dealers when performing authorized checks, adjustments, or repairs.

(d) A manufacturer may indicate preferred assembly plants for the various

engine families produced by the manufacturer for selection of vehicles in response to a test order. This shall be accomplished by submitting a list of engine families and the corresponding assembly plants from which the manufacturer desires to have vehicles selected to the Administrator. In order that a manufacturer's preferred location for issuance of a test order for a configuration of a particular engine family be considered, the list must be submitted prior to issuance of the test order. Notwithstanding the fact that a manufacturer has submitted the above list, the Administrator may, upon making the determination that evidence exists indicating noncompliance at other than the manufacturer's preferred plant, order testing at such other plant where vehicles of the configuration specified in the test order are assembled.

(e) During a given model year, the Administrator shall not issue to a manufacturer more SEA test orders than an annual limit determined by dividing the projected sales bound for the U.S. market for that model year, as made by the manufacturer in its report submitted under paragraph (a)(2) of §600.207–80 of the Automobile Fuel Economy Regulations, by 300,000 and rounding to the nearest whole number, unless the projected sales are less than 150,000, in which case the annual limit is one. However, the annual limit for SEA test orders will be recalculated if a manufacturer submits to EPA in writing prior to or during the model year a sales projection update.

(1) Any SEA test order for which the configuration fails in accordance with §86.610 or for which testing is not completed does not count against the annual limit.

(2) When the annual limit has been met, the Administrator may issue additional test orders for those configurations for which evidence exists indicating noncompliance. An SEA test order issued on this basis will include a statement as to the reason for its issuance.

[41 FR 31483, July 28, 1976, as amended at 43 FR 4552, Feb. 2, 1978; 49 FR 48480, Dec. 12, 1984. Redesignated and amended at 54 FR 2122, Jan. 19, 1989]

§86.603–97 Test orders.

Section 86.603–97 includes text that specifies requirements that differ from those specified in §86.603–88. Where a paragraph in §86.603–88 is identical and applicable to §86.603–97, this may be indicated by specifying the corresponding paragraph and the statement ''[Reserved]. For guidance see §86.603–88.''

(a) through (e) [Reserved]. For guidance see §86.603–88.

(f) In the event evidence exists indicating an engine family is in noncompliance, the Administrator may, in addition to other powers provided by this section, issue a test order specifying the engine family the manufacturer is required to test.

[62 FR 31234, June 6, 1997]

§86.603–98 Test orders.

Section 86.603–98 includes text that specifies requirements that differ from §86.603–88. Where a paragraph in §86.603–88 is identical and applicable to §86.603–98, this may be indicated by specifying the corresponding paragraph and the statement ''[Reserved]. For guidance see §86.603–88.'' Where a corresponding paragraph of §86.603–88 is not applicable, this is indicated by the statement ''[Reserved].''.

(a) through (c) [Reserved]. For guidance see §86.603–88.

(d) A manufacturer may indicate preferred assembly plants for the various engine families and evaporative/refueling families produced by the manufacturer for selection of vehicles in response to a test order. This shall be accomplished by submitting a list of engine families with the associated evaporative/refueling families, and the corresponding assembly plants from which the manufacturer desires to have vehicles selected, to the Administrator. In order that a manufacturer's preferred location for issuance of a test order for a configuration of a particular engine family and/or evaporative/refueling family be considered, the list must be submitted prior to issuance of the test order. Notwithstanding the fact that a manufacturer has submitted the above list, the Administrator may, upon making the determination that evidence exists indicating noncompliance

at other than the manufacturer's preferred plant, order selection at such other plant where vehicles of the configuration specified in the test order are assembled.

(e) [Reserved]. For guidance see § 86.603–88.

(f) In the event evidence exists indicating an engine family is in noncompliance, the Administrator may, in addition to other powers provided by this section, issue a test order specifying the engine family the manufacturer is required to test.

[59 FR 16300, Apr. 6, 1994, as amended at 62 FR 31234, June 6, 1997]

§ 86.604–84 Testing by the Administrator.

(a) The Administrator may require by test order that vehicles of a specified configuration be selected in a manner consistent with the requirements of § 86.607 and submitted to him at such place as he may designate for the purpose of conducting emission tests. These tests shall be conducted in accordance with § 86.608 of these regulations to determine whether vehicles manufactured by the manufacturer conform with the regulations with respect to which the certificate of conformity was issued.

(b)(1) Whenever the Administrator conducts a test on a test vehicle or the Administrator and manufacturer each conduct a test on the same test vehicle, the results of the Administrator's test shall comprise the official data for that vehicle.

(2) Whenever the manufacturer conducts all tests on a test vehicle, the manufacturer's test data will be accepted as the official data: *Provided*, That if the Administrator makes a determination based on testing under paragraph (a) of this section that there is a substantial lack of agreement between the manufacturer's test results and the Administrator's test results, no manufacturer's test data from the manufacturer's test facility will be accepted for purposes of this subpart.

(c) In the event that testing conducted under paragraph (a) of this section demonstrates a lack of agreement under paragraph (b)(2), of this section, the Administrator will:

(1) Notify the manufacturer in writing of his determination that the test facility is inappropriate for conducting the tests required by this subpart and the reasons therefor, and

(2) Reinstate any manufacturer's data upon a showing by the manufacturer that the data acquired under paragraph (a) of this section was erroneous and the manufacturer's data was correct.

(d) The manufacturer may request in writing that the Administrator reconsider his determination in paragraph (b)(2) of this section based on data or information which indicates that changes have been made to the test facility and such changes have resolved the reasons for disqualification.

[41 FR 31483, July 28, 1976, as amended at 49 FR 48481, Dec. 12, 1984. Redesignated at 54 FR 2123, Jan. 19, 1989]

§ 86.605–88 Maintenance of records; submittal of information.

(a) The manufacturer of any new motor vehicle subject to any of the standards or procedures prescribed in this part shall establish, maintain and retain the following adequately organized and indexed records:

(1) *General records.* (i) A description of all equipment used to test vehicles in accordance with § 86.608 pursuant to a test order issued under this subpart, including the following information:

(A) Dynamometer.

(*1*) Inertia loading.

(*2*) Road load power absorption at 50 m.p.h.

(*3*) Manufacturer, model and serial number.

(B) Constant Volume Sampler.

(*1*) Pressure of the mixture of exhaust and dilution air entering the positive displacement pump, pressure increase across the pump, and the temperature set point of the temperature control system.

(*2*) Number of revolutions of the positive displacement pump accumulated while test is in progress and exhaust samples are being collected.

(*3*) Humidity of dilution air.

(*4*) Manufacturer, model, type and serial number.

(C) Instrumentation.

(*1*) Manufacturer, model and serial number for each analyzer.

(*2*) Pertinent information such as tuning, gain, ranges and calibration data.

(*3*) Identification of zero, span, exhaust gas and dilution air sample traces.

(*4*) Temperature set point of heated sample line and heated hydrocarbon detector temperature control system (for diesel vehicles only).

(D) Test cell.

(*1*) Barometric pressure, ambient temperature and humidity.

(*2*) Data and time of day.

(ii) In lieu of recording test equipment information, reference to a vehicle test cell number may be used, with the advance approval of the Administrator: Provided, the test cell records show the pertinent information.

(2) *Individual records.* These records pertain to each audit conducted pursuant to this subpart.

(i) The location where audit testing was performed, and the date and time for each emissions test.

(ii) The number of miles on the test vehicle when the test began and ended.

(iii) The names of supervisory personnel responsible for the conduct of the audit.

(iv) A record and description of any repairs performed prior to and/or subsequent to approval by the Administrator, giving the date and time of the repair, the reason for it, the person authorizing it, and the names of supervisory personnel responsible for the repair.

(v) The dates when the test vehicles were shipped from the assembly plant or the storage facility and when they were received at the testing facility.

(vi) The drive wheel tire pressure and the inertia weight class for each test vehicle, and the actual curb weight for each test vehicle required to be weighed pursuant to a test order.

(vii) A complete record of all emission tests performed pursuant to this subpart (except tests performed by EPA directly) including all individual worksheets and/or other documentation relating to each test, or exact copies thereof.

(viii) A brief description of all significant audit events, commencing with the test vehicle selection process, but not described by any other subparagraph under paragraph (a)(2) of this section, including such extraordinary events as vehicle accident.

(ix) A paper copy of the driver's trace for each test.

(3) Additional required records for diesel vehicles.

(4) The manufacturer shall record test equipment description, pursuant to paragraph (a)(1) of this section, for each test cell that is used to perform emission testing under this subpart.

(b) All records required to be maintained under this subpart shall be retained by the manufacturer for a period of one (1) year after completion of all testing in response to a test order. Records may be retained as hard copy or reduced to microfilm, punch cards, etc., depending upon the record retention procedures of the manufacturer: *Provided,* That in every case all the information contained in the hard copy shall be retained.

(c) The manufacturer shall, pursuant to a request made by the Administrator, submit to the Administrator the following information with regard to vehicle production:

(1) Number of vehicles, by configuration and assembly plant, scheduled for production for the time period designated in the request.

(2) Number of vehicles, by configuration and assembly plant, produced during the time period designated in the request which are complete for introduction into commerce.

(d) Nothing in this section shall limit the Administrator's discretion to require the manufacturer to retain additional records or submit information not specifically required by this section.

(e) All reports, submissions, notifications and requests for approvals made under this subpart shall be addressed to:

Director, Manufacturers Operations Division EN–340), U.S. Environmental Protection Agency, 401 M Street, SW, Washington, DC 20460.

[41 FR 31483, July 28, 1976, as amended at 44 FR 61962, Oct. 29, 1979; 49 FR 48481, Dec. 12, 1984. Redesignated at 54 FR 2123, Jan. 19, 1989]

§ 86.605–98 Maintenance of records; submittal of information.

Section 86.605–98 includes text that specifies requirements that differ from § 86.605–88. Where a paragraph in § 86.605–88 is identical and applicable to § 86.605–98, this may be indicated by specifying the corresponding paragraph and the statement ''[Reserved]. For guidance see § 86.605–88.'' Where a corresponding paragraph of § 86.605–88 is not applicable, this is indicated by the statement ''[Reserved].''.

(a) through (a)(1)(i)(D) [Reserved]. For guidance see § 86.605–88.

(E) Refueling Enclosure (Refueling SHED).

(*1*) Total internal volume.

(*2*) Capacity of mixing blower.

(*3*) Location of refueling access ports.

(*4*) Enclosure barometric pressure and ambient temperature.

(*5*) Soak area temperature records.

(F) Fuel Dispenser for Refueling.

(*1*) Fuel dispensing rate.

(*2*) Manufacturer and model of fuel nozzle.

(*3*) Dispensed fuel temperature.

(*4*) Dispensed fuel volume.

(a)(1)(ii) through (e) [Reserved]. For guidance see § 86.605–88.

(2) [Reserved]

[59 FR 16301, Apr. 6, 1994]

§ 86.606–84 Entry and access.

(a) In order to allow the Administrator to determine whether a manufacturer is complying with the provisions of this subpart and a test order issued thereunder, EPA Enforcement Officers may enter during normal operating hours upon presentation of credentials any of the following:

(1) Any facility where any vehicle to be introduced into commerce or any emission-related component is or has been manufactured, assembled, or stored;

(2) Any facility where any tests conducted pursuant to a test order or any procedures or activities connected with such tests are or were performed;

(3) Any facility where any vehicle which is being, was, or is to be tested is present; and

(4) Any facility where any record or other document relating to any of the above is located.

(b) Upon admission to any facility referred to in paragraph (a) of this section, EPA Enforcement Officers may:

(1) Inspect and monitor any part or aspect of vehicle manufacturer, assembly, storage, testing and other procedures, and the facilities in which these procedures are conducted;

(2) Inspect and monitor any part or aspect of vehicle test procedures or activities, including, but not limited to, vehicle selection, preparation, mileage accumulation, preconditioning, emission tests, and maintenance; and verify calibration of test equipment;

(3) Inspect and make copies of any records or documents related to the assembly, storage, selection and testing of a vehicle in compliance with a test order; and

(4) Inspect and photograph any part or aspect of any vehicle and any component used in its assembly that is reasonably related to the purpose of the entry.

(c) EPA Enforcement Officers may obtain reasonable assistance without cost from those in charge of a facility to help them perform any function listed in this subpart and may request the recipient of a test order to arrange with those in charge of a facility operated for its benefit to furnish reasonable assistance without cost to EPA whether or not the recipient controls the facility.

(d) EPA Enforcement Officers may seek a warrant or court order authorizing the EPA Enforcement Officers to conduct activities related to entry and access as authorized in this section. EPA Enforcement Officers may proceed *ex parte* to obtain a warrant whether or not the Enforcement Officers first sought permission from the recipient of the test order or the party in charge of the facilities in question to conduct those activities related to entry and access.

(e) A recipient of a test order shall permit EPA Enforcement Officers who present a warrant or court order as described in paragraph (d) of this section to conduct activities related to entry and access as authorized in this section and as described in the warrant or court order. A recipient of a test order shall cause those in charge of its facility or a facility operated for its benefit

to permit EPA Enforcement Officers to conduct these activities related to entry and access pursuant to a warrant or court order whether or not the recipient controls the facility. In the absence of such a warrant or court order, EPA Enforcement Officers may conduct those activities related to entry and access only upon the consent of either the recipient of the test order or the party in charge of the facilities in question.

(f) It is not a violation of this part or the Clean Air Act for any person to refuse to permit EPA Enforcement Officers to conduct activities related to entry and access as authorized in this section without a warrant or court order.

(g) A manufacturer is responsible for locating its foreign testing and manufacturing facilities in jurisdictions in which local foreign law does not prohibit EPA Enforcement Officers from conducting the entry and access activities specified in this section. EPA will not attempt to make any inspections which it has been informed that local foreign law prohibits.

(h) For purposes of this section:

(1) *Presentation of Credentials* means display of the document designating a person as an EPA Enforcement Officer.

(2) Where vehicle storage areas or facilities are concerned, *operating hours* means all times during which personnel other than custodial personnel are at work in the vicinity of the area or facility and have access to it.

(3) Where facilities or areas other than those covered by paragraph (h)(2) of this section are concerned, *operating hours* means all times during which an assembly line is in operation, vehicle assembly is occurring, or testing, repair, mileage accumulation, production or compilation of records, or any other procedure or activity related to testing, or to vehicle manufacture or assembly, is being conducted in a facility.

(4) *Reasonable assistance* includes, but is not limited to, providing clerical, copying, interpreting and translating services and, at the request of an EPA Enforcement Officer, making available personnel of the facility being inspected during their working hours to provide information relevant to the Enforcement Officer's activities authorized in this section. Any employee whom a manufacturer has instructed to appear at the request of an Enforcement Officer may be accompanied, represented, and advised by counsel.

[41 FR 31483, July 28, 1976, as amended at 49 FR 48481, Dec. 12, 1984. Redesignated at 54 FR 2123, Jan. 19, 1989]

§86.607–84 Sample selection.

(a) Vehicles comprising a test sample which are required to be tested, pursuant to a test order issued in accordance with this subpart, will be selected at the location and in the manner specified in the test order. If a manufacturer determines that the test vehicles cannot be selected in the manner specified in the test order, an alternative selection procedure may be employed: *Provided,* That the manufacturer requests approval of the alternative procedure in advance of the start of test sample selection and that the Administrator approves the procedure. Special order vehicles are exempt from sample selection unless a test sample cannot be completed otherwise.

(b) The manufacturer shall have assembled the test vehicles of the configuration selected for testing using its normal mass production processes for vehicles to be distributed into commerce. During the audit, the manufacturer shall inform the Administrator of any change(s) implemented in its production processes, including quality control, which may be reasonably expected to affect the emissions of the vehicles selected, between the time the manufacturer received the test order and the time the manufacturer finished selecting test vehicles.

(c) No quality control, testing, or assembly procedures will be used on the completed test vehicles or any portion thereof, including parts and subassemblies, that has not been or will not be used during the production and assembly of all other vehicles of that configuration.

(d) The test order may specify that EPA Enforcement Officers, rather than the manufacturer, will select the test vehicles according to the method described in paragraph (a) of this section.

(e) The order in which test vehicles are selected determines the order in

which test results are to be used in applying the sampling plan in accordance with § 86.610.

(f) The manufacturer shall keep on hand all untested vehicles, if any, comprising the test sample until a pass or fail decision is reached in accordance with paragraph (d) of § 86.610. The manufacturer may ship any tested vehicle which has not failed in accordance with paragraph (a) of § 86.610. However, once a manufacturer ships any vehicle from the test sample, it relinquishes the prerogative to conduct retests provided in paragraph (i) of § 86.608.

[49 FR 48482, Dec. 12, 1984. Redesignated at 54 FR 2123, Jan. 19, 1989]

§ 86.608–88 Test procedures.

(a) The prescribed test procedures are contained in subpart B of this part 86. For purposes of Selective Enforcement Audit testing, the manufacturer shall not perform any of the test procedures in subpart B of this part relating to evaporative emission testing, except as specified in paragraph (a)(2) of this section.

(1) The Administrator may, on the basis of a written application by a manufacturer, prescribe test procedures other than those in subpart B of this part for any motor vehicle which he determines is not susceptible to satisfactory testing using the procedures in subpart B of this part.

(2) The following exceptions to the test procedures in subpart B of this part are applicable to Selective Enforcement Audit testing:

(i) The manufacturer may use test fuel meeting the specifications of paragraph (a)(1) or (b)(2) of § 86.113–82 for mileage accumulation. Otherwise, the manufacturer may use fuels other than those specified in this section only with advance approval of the Administrator.

(ii) The manufacturer may measure the temperature of the test fuel at other than the approximate mid-volume of the fuel tank, as specified in § 86.131(a), and may drain the test fuel from other than the lowest point of the tank, as specified in § 86.131(b), provided an equivalent method is used. Equivalency documentation shall be maintained by the manufacturer and shall be made available to the Administrator upon request.

(iii) The manufacturer may perform additional preconditioning on SEA test vehicles other than the preconditioning specified in § 86.132 only if the additional preconditioning had been performed on certification test vehicles of the same configuration.

(iv) The manufacturer shall perform the heat build procedure 11 to 34 hours following vehicle preconditioning rather than according to the time period specified in paragraph § 86.133(a). All references in § 86.133 to an evaporative emission enclosure (SHED) and analyzing for HC during the heat build can be ignored.

(v) The manufacturer may substitute slave tires for the drive wheel tires on the vehicle as specified in paragraph § 86.135(e): *Provided,* That the slave tires are the same size.

(vi) The cold start exhaust emission test described in § 86.137 shall follow the heat build procedure described in § 86.133 by not more than one hour.

(vii) In performing exhaust sample analysis under § 86.140.

(A) When testing diesel vehicles, the manufacturer shall allow a minimum of 20 minutes warm-up for the HC analyzer, and a minimum of 2 hours warm-up for the CO, CO_2 and NO_X analyzers. (Power is normally left on infrared and chemiluminescent analyzers. When not in use, the chopper motors of the infrared analyzers are turned off and the phototube high voltage supply to the chemiluminescent analyzers is placed in the standby position.)

(B) The manufacturer shall exercise care to prevent moisture from condensing in the sample collection bags.

(viii) The manufacturer need not comply with § 86.142, since the records required therein are provided under other provisions of subpart G of this part.

(ix) In addition to the requirements of subpart B of this part, the manufacturer shall prepare gasoline-fueled vehicles as follows prior to exhaust emission testing:

(A) The manufacturer shall inspect the fuel system to insure the absence of any leaks of liquid or vapor to the atmosphere by applying a pressure of

14.5±0.5 inches of water to the fuel system, allowing the pressure to stabilize, and isolating the fuel system from the pressure source. Following isolation of the fuel system, pressure must not drop more than 2.0 inches of water in 5 minutes. If required, the manufacturer shall perform corrective action in accordance with paragraph § 86.608(d) and report this action in accordance with paragraph § 86.609(d).

(B) When performing this pressure check, the manufacturer shall exercise care to neither purge nor load the evaporative emission control system.

(C) The manufacturer shall not modify the test vehicle's evaporative emission control system by component addition, deletion, or substitution, except to comply with paragraph (a)(2)(ii) of this section if approved in advance by the Administrator.

(b)(1) The manufacturer shall not adjust, repair, prepare, or modify the vehicles selected for testing and shall not perform any emission tests on vehicles selected for testing pursuant to the test order unless this adjustment, repair, preparation, modification, and/or tests are documented in the manufacturer's vehicle assembly and inspection procedures and are actually performed or unless these adjustments and/or tests are required or permitted under this subpart or are approved in advance by the Administrator.

(2) For 1981 and later model years the Administrator may adjust or cause to be adjusted any engine or vehicle parameter which the Administrator has determined to be subject to adjustment for new vehicle compliance testing (e.g., for certification *or* Selective Enforcement Audit testing) in accordance with § 86.081–22(c)(1), to any setting within the physically adjustable range of that parameter, as determined by the Administrator in accordance with § 86.081–22(e)(3)(ii), prior to the performance of any tests. However, if the idle speed parameter is one which the Administrator has determined to be subject to adjustment, the Administrator shall not adjust it to a setting which causes a lower engine idle speed than will be possible within the physically adjustable range of the idle speed parameter on the vehicle when it has accumulated 4,000 miles, all other parameters being adjusted identically for the purpose of comparison. The Administrator, in making or specifying such adjustments, will consider the effect of the deviation from the manufacturer's recommended setting on emissions performance characteristics as well as the likelihood that similar settings will occur on in-use light-duty vehicles or light-duty trucks. In determining likelihood, the Administrator will consider factors such as, but not limited to, the effect of the adjustment on vehicle performance characteristics and surveillance information from similar in-use vehicles.

(c) Prior to performing exhaust emission testing on an SEA test vehicle, the manufacturer may accumulate on each vehicle a number of miles equal to the greater of 4,000 miles, or the number of miles the manufacturer accumulated during certification on the emission-data vehicle corresponding to the configuration specified in the test order.

(1) Mileage accumulation must be performed in any manner using good engineering judgment to obtain emission results representative of normal production vehicles. This mileage accumulation must be consistent with the new vehicle break-in instructions contained in the applicable vehicle owner's manual, if any.

(2) The manufacturer shall accumulate mileage at a minimum rate of 300 miles per vehicle during each 24 hour period, unless otherwise provided by the Administrator.

(i) The first 24 hour period for mileage accumulation shall begin as soon as authorized vehicle checks, inspections and preparations are completed on each vehicle.

(ii) The minimum mileage accumulation rate does not apply on weekends or holidays.

(iii) If the manufacturer's mileage accumulation target is less than the minimum rate specified (300 miles per day), then the minimum daily accumulation rate shall be equal to the manufacturer's mileage accumulation target.

(3) Mileage accumulation shall be completed on a sufficient number of test vehicles during consecutive 24 hour periods to assure that the number

of vehicles tested per day fulfills the requirements of paragraph (g) of this section.

(d) The manufacturer shall not perform any maintenance on test vehicles after selection for testing nor shall the Administrator allow deletion of any test vehicle from the test sequence, unless requested by the manufacturer and approved by the Administrator before any test vehicle maintenance or deletion.

(e) The manufacturer will be allowed 24 hours to ship test vehicles from the assembly plant or storage facility to the test facility if the test facility is not located at the plant or storage facility or in close proximity to the plant or storage facility: Except, That the Administrator may approve more time based upon a request by the manufacturer accompanied by a satisfactory justification.

(f) If a vehicle cannot complete the mileage accumulation or emission tests because of vehicle malfunction, the manufacturer may request the Administrator to authorize the repair of that vehicle or its deletion from the test sequence.

(g) Whenever the manufacturer conducts testing pursuant to a test order issued under this subpart, the manufacturer shall notify the Administrator within one working day of receipt of the test order, which test facility will be used to comply with the test order and the number of available test cells at that facility. If no test cells are available at the desired facility, the manufacturer must provide alternate testing capability satisfactory to the Administrator. The manufacturer shall complete emission testing on a minimum of four vehicles per 24 hour period including voided tests for each available test cell at his testing facility: Except, That the Administrator may approve a longer period based upon a request by the manufacturer accompanied by satisfactory justification.

(h) The manufacturer shall perform test vehicle selection, preparation, mileage accumulation, shipping, and testing in such a manner as to assure that the audit is performed in an expeditious manner.

(i) The manufacturer may retest any test vehicle after a fail decision has been reached in accordance with paragraph (d) of § 86.610 based on the first test on each vehicle; *except,* that the Administrator may approve retesting at other times during the audit based upon a request by the manufacturer accompanied by a satisfactory justification. The manufacturer may test each vehicle a total of three times. The manufacturer shall test each vehicle the same number of times. The manufacturer may accumulate additional mileage on test vehicles before conducting retests, subject to the provisions of paragraph (c) of this section.

[41 FR 31483, July 28, 1976, as amended at 43 FR 4552, Feb. 2, 1978; 44 FR 2975, Jan. 12, 1979; 45 FR 14524, Mar. 5, 1980; 47 FR 49813, Nov. 2, 1982; 49 FR 48482, Dec. 12, 1984. Redesignated and amended at 54 FR 2123, Jan. 19, 1989]

§ 86.608–90 Test procedures.

(a) The prescribed test procedures are contained in subpart B and/or subpart C of this part 86. For purposes of Selective Enforcement Audit testing, the manufacturer shall not perform any of the test procedures in subpart B of this part relating to evaporative emission testing, except as specified in paragraph (a)(2) of this section.

(1) The Administrator may, on the basis of a written application by a manufacturer, prescribe test procedures other than those in subpart B and/or subpart C of this part for any motor vehicle which he determines is not susceptible to satisfactory testing using the procedures in subpart B and/or subpart C of this part. The Administrator may, based on advance application by a manufacturer, approve optional test procedures for use in Selective Enforcement Audit testing.

(2) The following exceptions to the test procedures in subpart B of this part are applicable to Selective Enforcement Audit testing:

(i) For mileage accumulation, the manufacturer may use test fuel meeting the specifications of mileage and service accumulation fuels of § 86.113. Otherwise, the manufacturer may use fuels other than those specified in this section only with the advance approval of the Administrator.

(ii) The manufacturer may measure the temperature of the test fuel at

other than the approximate mid-volume of the fuel tank, as specified in § 86.131–96(a) with only a single temperature sensor, and may drain the test fuel from other than the lowest point of the tank, as specified in § 86.131–96(b), provided an equivalent method is used. Equivalency documentation shall be maintained by the manufacturers and shall be made available to the Administrator upon request. Additionally, for any test vehicle that has remained under laboratory ambient temperature conditions for at least 6 hours prior to testing, the vehicle soak described in § 86.132–96(c) may be eliminated upon approval of the Administrator. In such cases, the vehicle shall be operated through the preconditioning drive described in § 86.132–96(c) immediately following the fuel drain and fill procedure described in § 86.132–96(b).

(iii) The manufacturer may perform additional preconditioning on SEA test vehicles other than the preconditioning specified in § 86.132 only if the additional preconditioning had been performed on certification test vehicles of the same configuration.

(iv) If the Administrator elects to use the evaporative canister preconditioning procedure described in § 86.132–96(k), the manufacturer shall perform the heat build procedure 11 to 34 hours following vehicle preconditioning rather than according to the time period specified in § 86.133–90(a). All references in § 86.133–90 to an evaporative emission enclosure (SHED) and analyzing for HC during the heat build can be ignored.

(v) The manufacturer may substitute slave tires for the drive wheel tires on the vehicle as specified in paragraph § 86.135–90(e): Provided, that the slave tires are the same size.

(vi) If the Administrator elects to use the evaporative canister preconditioning procedure described in § 86.132–96(k), the cold start exhaust emission test described in § 86.137 shall follow the heat build procedure described in § 86.133–90 by not more than one hour.

(vii) In performing exhaust sample analysis under § 86.140.

(A) When testing diesel vehicles, or methanol-fueled Otto-cycle vehicles, the manufacturer shall allow a minimum of 20 minutes warm-up for the HC analyzer, and for diesel vehicles, a minimum of two hours warm-up for the CO, CO_2, and NO_X analyzers. (Power is normally left on infrared and chemiluminescent analyzers. When not in use, the chopper motors of the infrared analyzers are turned off and the phototube high voltage supply to the chemiluminescent analyzers is placed in the standby position.)

(B) The manufacturer shall exercise care to prevent moisture from condensing in the sample collection bags.

(viii) The manufacturer need not comply with § 86.142, since the records required therein are provided under other provisions of subpart G of this part.

(ix) In addition to the requirements of subpart B of this part, the manufacturer shall prepare gasoline-fueled and methanol-fueled vehicles as follows prior to exhaust emissions testing:

(A) The manufacturer shall inspect the fuel system to insure the absence of any leaks of liquid or vapor to the atmosphere by applying a pressure of 14.5±0.5 inches of water to the fuel system, allowing the pressure to stabilize, and isolating the fuel system from the pressure source, pressure must not drop more than 2.0 inches of water in 5 minutes. If required, the manufacturer shall perform corrective action in accordance with § 86.608 and report this action in accordance with § 86.609.

(B) When performing this pressure check, the manufacturer shall exercise care to neither purge nor load the evaporative emission control system.

(C) The manufacturer shall not modify the test vehicle's evaporative emission control system by component addition, deletion, or substitution, except to comply with paragraph (a)(2)(ii) of this section if approved in advance by the Administrator.

(3) The following exceptions to the test procedures in subpart C of this part are applicable to Selective Enforcement Audit testing:

(i) The manufacturer may measure the temperature of the test fuel at other than the approximate mid-volume of the fuel tank, as specified in § 86.231(a), and may drain the test fuel from other than the lowest point of the fuel tank as specified in § 86.231(b), provided an equivalent method is used. Equivalency documentation shall be

maintained by the manufacturer and shall be made available to the Administrator upon request.

(ii) In performing exhaust sample analysis under § 86.240, the manufacturer shall exercise care to prevent moisture from condensing in the sample collection bags.

(iii) The manufacturer need not comply with § 86.242 since the records required therein are provided under other provisions of subpart G of this part.

(iv) In addition to the requirements of subpart C of this part, the manufacturer shall prepare gasoline-fueled vehicles as follows prior to exhaust emission testing:

(A) The manufacturer shall inspect the fuel system to ensure the absence of any leaks of liquid or vapor to the atmosphere by applying a pressure of 14.5±0.5 inches of water (3.6±0.1 kPa) to the fuel system allowing the pressure to stabilize and isolating the fuel system from the pressure source. Following isolation of the fuel system, pressure must not drop more than 2.0 inches of water (0.5 kPa) in five minutes. If required, the manufacturer shall perform corrective action in accordance with paragraph § 86.608(d) and report this action in accordance with paragraph § 86.609(d).

(B) When performing this pressure check, the manufacturer shall exercise care to neither purge nor load the evaporative emission control system.

(C) The manufacturer shall not modify the test vehicle's evaporative emission control system by component addition, deletion, or substitution, except if approved in advance by the Administrator, to comply with paragraph (a)(3)(i) of this section.

(b)(1) The manufacturer shall not adjust, repair, prepare, or modify the vehicles selected for testing and shall not perform any emission tests on vehicles selected for testing pursuant to the test order unless this adjustment, repair, preparation, modification, and/or tests are documented in the manufacturer's vehicle assembly and inspection procedures and are actually performed or unless these adjustments and/or tests are required or permitted under this subpart or are approved in advance by the Administrator.

(2) For 1981 and later model years the Administrator may adjust or cause to be adjusted any engine or vehicle parameter which the Administrator has determined to be subject to adjustment for new vehicle compliance testing (e.g., for certification or Selective Enforcement Audit testing) in accordance with § 86.081–22(c)(1), to any setting within the physically adjustable range of that parameter, as determined by the Administrator in accordance with § 86.081–22(e)(3)(ii), prior to the performance of any tests. However, if the idle speed parameter is one which the Administrator has determined to be subject to adjustment, the Administrator shall not adjust it to a setting which causes a lower engine idle speed than will be possible within the physically adjustable range of the idle speed parameter on the vehicle when it has accumulated 4,000 miles, all other parameters being adjusted identically for the purpose of comparison. The Administrator, in making or specifying such adjustments, will consider the effect of the deviation from the manufacturer's recommended setting on emissions performance characteristics as well as the likelihood that similar settings will occur on in-use light-duty vehicles or light-duty trucks. In determining likelihood, the Administrator will consider factors such as, but not limited to, the effect of the adjustment on vehicle performance characteristics and surveillance information from similar in-use vehicles.

(c) Prior to performing exhaust emission testing on an SEA test vehicle, the manufacturer may accumulate on each vehicle a number of miles equal to the greater of 4,000 miles, or the number of miles the manufacturer accumulated during certification on the emission-data vehicle corresponding to the configuration specified in the test order.

(1) Mileage accumulation must be performed in any manner using good engineering judgement to obtain emission results representative of normal production vehicles. This mileage accumulation must be consistent with the new vehicle break-in instructions contained in the applicable vehicle owner's manual, if any.

(2) The manufacturer shall accumulate mileage at a minimum rate of 300 miles per vehicle during each 24 hour period, unless otherwise provided by the Administrator.

(i) The first 24 hour period for mileage accumulation shall begin as soon as authorized vehicle checks, inspections and preparations are completed on each vehicle.

(ii) The minimum mileage accumulation rate does not apply on weekends or holidays.

(iii) If the manufacturer's mileage accumulation target is less than the minimum rate specified (300 miles per day), then the minimum daily accumulation rate shall be equal to the manufacturer's mileage accumulation target.

(3) Mileage accumulation shall be completed on a sufficient number of test vehicles during consecutive 24 hour periods to assure that the number of vehicles tested per day fulfills the requirements of paragraph (g) of this section.

(d) The manufacturer shall not perform any maintenance on test vehicles after selection for testing nor shall the Administrator allow deletion of any test vehicle from the test sequence, unless requested by the manufacturer and approved by the Administrator before any test vehicle maintenance or deletion.

(e) The manufacturer will be allowed 24 hours to ship test vehicles from the assembly plant or storage facility to the test facility if the test facility is not located at the plant or storage facility or in close proximity to the plant or storage facility: Except, That the Administrator may approve more time based upon a request by the manufacturer accompanied by a satisfactory justification.

(f) If a vehicle cannot complete the mileage accumulation or emission tests because of vehicle malfunction, the manufacturer may request the Administrator to authorize the repair of that vehicle or its deletion from the test sequence.

(g) Whenever the manufacturer conducts testing pursuant to a test order issued under this subpart, the manufacturer shall notify the Administrator within one working day of receipt of the test order, which test facility will be used to comply with the test cells at that facility. If no test cells are available at the desired facility, the manufacturer must provide alternate testing capability satisfactory to the Administrator. The manufacturer shall complete emission testing on a minimum of four vehicles per 24 hour period including voided tests for each available test cell at his testing facility: Except, That the Administrator may approve a longer period based upon a request by the manufacturer accompanied by satisfactory justification.

(h) The manufacturer shall perform test vehicle selection, preparation, mileage accumulation, shipping, and testing in such a manner as to assure that the audit is performed in an expeditious manner.

(i) The manufacturer may retest any test vehicle after a fail decision has been reached in accordance with paragraph (d) of §86.610 based on the first test on each vehicle; except, that the Administrator may approve retesting at other times during the audit based upon a request by the manufacturer accompanied by a satisfactory justification. The manufacturer may test each vehicle the same number of times. The manufacturer may accumulate additional mileage on test vehicles before conducting retests, subject to the provisions of paragraph (c) of this section.

[54 FR 14557, Apr. 11, 1989, as amended at 57 FR 31921, July 17, 1992; 58 FR 16045, Mar. 24, 1993; 60 FR 43898, Aug. 23, 1995]

§86.608–96 Test procedures.

Section 86.608–96 includes text that specifies requirements that differ from §86.608–90. Where a paragraph in §86.608–90 is identical and applicable to §86.608–96, this is indicated by specifying the corresponding paragraph and the statement ''[Reserved]. For guidance see §86.608–90.'' Where a corresponding paragraph of §86.608–90 is not applicable, this is indicated by the statement ''[Reserved].''

(a) The prescribed test procedures are the FTP as described in subpart B of this part, the cold temperature CO test procedure as described in subpart C of this part, and the CST as described in subpart O of this part, as applicable. For purposes of Selective Enforcement

Audit testing, the manufacturer may not perform any of the test procedures in subpart B of this part relating to evaporative emission testing, except as specified in § 86.608–90(a)(2).

(1) The Administrator may select and prescribe the sequence of any CSTs. Further, the Administrator may, on the basis of a written application by a manufacturer, approve optional test procedures other than those in subparts B, C, and O of this part for any motor vehicle which is not subject to satisfactory testing using the procedures in subparts B, C, and O of this part.

(2) through (3) [Reserved]. For guidance see § 86.608–90.

(4) The exceptions to the test procedures described in subpart O of this part that are listed in paragraphs (a)(4)(i) and (ii) of this section are applicable to Selective Enforcement Audit testing.

(i) The manufacturer need not comply with § 86.1442, since the records required therein are provided under other provisions of subpart G of this part.

(ii) In addition to the requirements of subpart O of this part, the manufacturer must prepare vehicles as in paragraphs (a)(4)(ii) (A) through (C) of this section prior to exhaust emission testing.

(A) The manufacturer must inspect the fuel system to insure the absence of any leaks of liquid or vapor to the atmosphere by applying a pressure of 14.5 ±0.5 inches of water to the fuel system, allowing the pressure to stabilize, and isolating the fuel system from the pressure source. Pressure must not drop more than 2.0 inches of water in five minutes. If required, the manufacturer performs corrective action in accordance with this section and must report this action in accordance with § 86.609.

(B) When performing this pressure check, the manufacturer must exercise care to neither purge nor load the evaporative system.

(C) The manufacturer may not modify the test vehicle's evaporative emission control system by component addition, deletion, or substitution.

(b) through (i) [Reserved]. For guidance see § 86.608–90.

[58 FR 58423, Nov. 1, 1993]

§ 86.608–97 Test procedures.

Section 86.608–97 includes text that specifies requirements that differ from those specified in §§ 86.608–90 and 86.608–96. Where a paragraph in § 86.608–90 or § 86.608–96 is identical and applicable to § 86.608–97, this may be indicated by specifying the corresponding paragraph and the statement ''[Reserved]. For guidance see § 86.608–90.'' or ''[Reserved]. For guidance see § 86.608–96.''

(a) The prescribed test procedures are the Federal Test Procedure, as described in subpart B and/or subpart R of this part, whichever is applicable, the cold temperature CO test procedure as described in subpart C of this part, and the Certification Short Test procedure as described in subpart O of this part. Where the manufacturer conducts testing based on the requirements specified in Chapter 1 or Chapter 2 of the California Regulatory Requirements Applicable to the National Low Emission Vehicle Program (October, 1996), the prescribed test procedures are the procedures cited in the previous sentence, or substantially similar procedures, as determined by the Administrator. The California Regulatory Requirements Applicable to the National Low Emission Vehicle Program are incorporated by reference (see § 86.1). For purposes of Selective Enforcement Audit testing, the manufacturer shall not be required to perform any of the test procedures in subpart B of this part relating to evaporative emission testing, except as specified in paragraph (a)(2) of this section.

(1) [Reserved]. For guidance see § 86.608–96.

(2) The following exceptions to the test procedures in subpart B and/or subpart R of this part are applicable to Selective Enforcement Audit testing:

(i) For mileage accumulation, the manufacturer may use test fuel meeting the specifications for mileage and service accumulation fuels of § 86.113, or, for vehicles certified to the National LEV standards, the specifications of § 86.1771. Otherwise, the manufacturer may use fuels other than those specified in this section only with the advance approval of the Administrator.

(ii) [Reserved]. For guidance see § 86.608–90.

(iii) The manufacturer may perform additional preconditioning on Selective Enforcement Audit test vehicles other than the preconditioning specified in §86.132, or §86.1773 for vehicles certified to the National LEV standards, only if the additional preconditioning had been performed on certification test vehicles of the same configuration.

(a)(2)(iv) through (a)(2)(vii) [Reserved]. For guidance see §86.608–90.

(a)(2)(viii) The manufacturer need not comply with §86.142, or §86.1775, since the records required therein are provided under other provisions of this subpart G.

(a)(2)(ix) through (a)(3) [Reserved]. For guidance see §86.608–90.

(a)(4) [Reserved]. For guidance see §86.608–96.

(b) through (i) [Reserved]. For guidance see §86.608–90.

[62 FR 31234, June 6, 1997]

§86.608–98 Test procedures.

(a) The prescribed test procedures are the Federal Test Procedure, as described in subpart B and/or subpart R of this part, whichever is applicable, the cold temperature CO test procedure as described in subpart C of this part, and the Certification Short Test procedure as described in subpart O of this part. Where the manufacturer conducts testing based on the requirements specified in Chapter 1 or Chapter 2 of the California Regulatory Requirements Applicable to the National Low Emission Vehicle Program (October, 1996), the prescribed test procedures are the procedures cited in the previous sentence, or substantially similar procedures, as determined by the Administrator. The California Regulatory Requirements Applicable to the National Low Emission Vehicle Program are incorporated by reference (see §86.1). For purposes of Selective Enforcement Audit testing, the manufacturer shall not be required to perform any of the test procedures in subpart B of this part relating to evaporative emission testing, other than refueling emissions testing, except as specified in paragraph (a)(2) of this section.

(1) The Administrator may omit any of the testing procedures described in paragraph (a) of this section and may select and prescribe the sequence of any CSTs. Further, the Administrator may, on the basis of a written application by a manufacturer, approve optional test procedures other than those in subparts B, C, and O of this part for any motor vehicle which is not susceptible to satisfactory testing using the procedures in subparts B, C, and O of this part.

(2) The following exceptions to the test procedures in subpart B and/or subpart R of this part are applicable to Selective Enforcement Audit testing:

(i) For mileage accumulation, the manufacturer may use test fuel meeting the specifications for mileage and service accumulation fuels of §86.113, or, for vehicles certified to the National LEV standards, the specifications of §86.1771. Otherwise, the manufacturer may use fuels other than those specified in this section only with the advance approval of the Administrator.

(ii) The manufacturer may measure the temperature of the test fuel at other than the approximate mid-volume of the fuel tank, as specified in §86.131–96(a) with only a single temperature sensor, and may drain the test fuel from other than the lowest point of the tank, as specified in §86.131–96(b) and §86.152–98(a), provided an equivalent method is used. Equivalency documentation shall be maintained by the manufacturers and shall be made available to the Administrator upon request. Additionally, for any test vehicle that has remained under laboratory ambient temperature conditions for at least 6 hours prior to testing, the vehicle soak described in §86.132–96(c) may be eliminated upon approval of the Administrator. In such cases, the vehicle shall be operated through the preconditioning drive described in §86.132–96(c) immediately following the fuel drain and fill procedure described in §86.132–96(b).

(iii) The manufacturer may perform additional preconditioning on Selective Enforcement Audit test vehicles other than the preconditioning specified in §86.132, or §86.1773, for vehicles certified to the National LEV standards only if the additional preconditioning was performed on certification test vehicles of the same configuration.

(iv) If the Administrator elects to use the evaporative/refueling canister preconditioning procedure described in § 86.132–96(k), the manufacturer shall perform the heat build procedure 11 to 34 hours following vehicle preconditioning rather than according to the time period specified in § 86.133–90(a). All references to an evaporative emission enclosure and analyzing for HC during the heat build can be ignored.

(v) The manufacturer may substitute slave tires for the drive wheel tires on the vehicle as specified in paragraph § 86.135–90(e): *Provided,* that the slave tires are the same size.

(vi) If the Administrator elects to use the evaporative/refueling canister preconditioning procedure described in § 86.132–96(k), the cold start exhaust emission test described in § 86.137–96 shall follow the heat build procedure described in § 86.133–90 by not more than one hour.

(vii) In performing exhaust sample analysis under § 86.140–94.

(A) When testing diesel vehicles, or methanol-fueled Otto-cycle vehicles, the manufacturer shall allow a minimum of 20 minutes warm-up for the HC analyzer, and for diesel vehicles, a minimum of two hours warm-up for the CO, CO_2, and NO_X analyzers. (Power is normally left on infrared and chemiluminescent analyzers. When not in use, the chopper motors of the infrared analyzers are turned off and the phototube high voltage supply to the chemiluminescent analyzers is placed in the standby position.)

(B) The manufacturer shall exercise care to prevent moisture from condensing in the sample collection bags.

(viii) The manufacturer need not comply with § 86.142, § 86.155, or § 86.1775, since the records required therein are provided under other provisions of this subpart G.

(ix) If a manufacturer elects to perform the background determination procedure described in paragraph (a)(2)(xi) of this section in addition to performing the refueling emissions test procedure, the elapsed time between the initial and final FID readings shall be recorded, rounded to the nearest second rather than minute as described in § 86.154–98(e)(8). In addition, the vehicle soak described in § 86.153–98(e) shall be conducted with the windows and luggage compartment of the vehicle open.

(x) The Administrator may elect to perform a seal test, described in § 86.153–98(b), of both integrated and non-integrated systems instead of the full refueling test. When testing non-integrated systems, an manufacturer may conduct the canister purge described in § 86.153–98(b)(1) directly following the preconditioning drive described in § 86.132–96(e) or directly following the exhaust emissions test described in § 86.137–96.

(xi) In addition to the refueling test, a manufacturer may elect to perform the following background emissions determination immediately prior to the refueling measurement procedure described in § 86.154–98, provided EPA is notified of this decision prior to the start of testing in an SEA.

(A) The SHED shall be purged for several minutes immediately prior to the background determination. Warning: If at any time the concentration of hydrocarbons, of methanol, or of methanol and hydrocarbons exceeds 15,000 ppm C, the enclosure should be immediately purged. This concentration provides a 4:1 safety factor against the lean flammability limit.

(B) The FID (or HFID) hydrocarbon analyzer shall be zeroed and spanned immediately prior to the background determination. If not already on, the enclosure mixing fan and the spilled fuel mixing blower shall be turned on at this time.

(C) Place the vehicle in the SHED. The ambient temperature level encountered by the test vehicle during the entire background emissions determination shall be 80 °F ±3 °F. The windows and luggage compartment of the vehicle must be open and the gas cap must be secured.

(D) Seal the SHED. Immediately analyze the ambient concentration of hydrocarbons in the SHED and record. This is the initial background hydrocarbon concentration.

(E) Soak the vehicle for ten minutes ±1 minute.

(F) The FID (or HFID) hydrocarbon analyzer shall be zeroed and spanned

immediately prior to the end of the background determination.

(G) Analyze the ambient concentration of hydrocarbons in the SHED and record. This is the final background hydrocarbon concentration.

(H) The total hydrocarbon mass emitted during the background determination is calculated according to §86.156–98. To obtain a per-minute background emission rate, divide the total hydrocarbon mass calculated in this paragraph by the duration of the soak, rounded to the nearest second, described in paragraph (a)(2)(xi)(G) of this section.

(I) The background emission rate is multiplied by the duration of the refueling measurement obtained in paragraph (a)(2)(ix) of this section. This number is then subtracted from the total grams of emissions calculated for the refueling test according to §86.156–98(a) to obtain the adjusted value for total refueling emissions. The final results for comparison with the refueling emission standard shall be computed by dividing the adjusted value for total refueling mass emissions by the total gallons of fuel dispensed in the refueling test as described in §86.156–98(b).

(xii) In addition to the requirements of subpart B of this part, the manufacturer shall prepare gasoline-fueled and methanol-fueled vehicles as follows prior to emission testing:

(A) The manufacturer shall inspect the fuel system to ensure the absence of any leaks of liquid or vapor to the atmosphere by applying a pressure of 14.5±0.5 inches of water (3.6±0.1 Kpa) to the fuel system allowing the pressure to stabilize and isolating the fuel system from the pressure source. Following isolation of the fuel system, pressure must not drop more than 2.0 inches of water (0.5 Kpa) in five minutes. If required, the manufacturer shall perform corrective action in accordance with paragraph (d) of this section and report this action in accordance with §86.609–98(d).

(B) When performing this pressure check, the manufacturer shall exercise care to neither purge nor load the evaporative or refueling emission control systems.

(C) The manufacturer may not modify the test vehicle's evaporative or refueling emission control systems by component addition, deletion, or substitution, except to comply with paragraph (a)(2)(ii) of this section if approved in advance by the Administrator.

(3) The following exceptions to the test procedures in subpart C of this part are applicable to Selective Enforcement Audit testing:

(i) The manufacturer may measure the temperature of the test fuel at other than the approximate mid-volume of the fuel tank, as specified in §86.131–90(a), and may drain the test fuel from other than the lowest point of the fuel tank as specified in §86.131–90(b), provided an equivalent method is used. Equivalency documentation shall be maintained by the manufacturer and shall be made available to the Administrator upon request.

(ii) In performing exhaust sample analysis under §86.140–94, the manufacturer shall exercise care to prevent moisture from condensing in the sample collection bags.

(iii) The manufacturer need not comply with §86.142–90 since the records required therein are provided under other provisions of this subpart G.

(iv) In addition to the requirements of subpart C of this part, the manufacturer shall prepare gasoline-fueled vehicles as follows prior to exhaust emission testing:

(A) The manufacturer shall inspect the fuel system to ensure the absence of any leaks of liquid or vapor to the atmosphere by applying a pressure of 14.5±0.5 inches of water (3.6±0.1 Kpa) to the fuel system allowing the pressure to stabilize and isolating the fuel system from the pressure source. Following isolation of the fuel system, pressure must not drop more than 2.0 inches of water (0.5 Kpa) in five minutes. If required, the manufacturer shall perform corrective action in accordance with paragraph (d) of this section and report this action in accordance with §86.609–98(d).

(B) When performing this pressure check, the manufacturer shall exercise care to neither purge nor load the evaporative or refueling emission control system.

(C) The manufacturer shall not modify the test vehicle's evaporative or refueling emission control system by component addition, deletion, or substitution, except if approved in advance by the Administrator, to comply with paragraph (a)(3)(i) of this section.

(4) The exceptions to the test procedures in subpart O of this part applicable to Selective Enforcement Audit testing are listed in paragraphs (a)(4)(i) and (ii) of this section.

(i) The manufacturer need not comply with § 86.1442, since the records required therein are provided under provisions of this subpart G.

(ii) In addition to the requirements of subpart O of this part, the manufacturer must prepare vehicles as in paragraphs (a)(4)(ii) (A) through (C) of this section prior to exhaust emission testing.

(A) The manufacturer must inspect the fuel system to insure the absence of any leaks of liquid or vapor to the atmosphere by applying a pressure of 14.5±0.5 inches of water (3.6±0.1 Kpa) to the fuel system, allowing the pressure to stabilize, and isolating the fuel system from the pressure source. Pressure must not drop more than 2.0 inches of water (0.5 Kpa) in five minutes. If required, the manufacturer performs corrective action in accordance with paragraph (d) of this section and must report this action in accordance with § 86.609–98(d).

(B) When performing this pressure check, the manufacturer must exercise care to neither purge nor load the evaporative or refueling emission control system.

(C) The manufacturer may not modify the test vehicle's evaporative or refueling emission control system by component addition, deletion, or substitution.

(b)(1) The manufacturer shall not adjust, repair, prepare, or modify the vehicles selected for testing and shall not perform any emission tests on vehicles selected for testing pursuant to the test order unless this adjustment repair, preparation, modification, and/or tests are documented in the manufacturer's vehicle assembly and inspection procedures and are actually performed or unless these adjustments and/or tests are required or permitted under this subpart or are approved in advance by the Administrator.

(2) For 1981 and later model years the Administrator may adjust or cause to be adjusted any engine or vehicle parameter which the Administrator has determined to be subject to adjustment for new vehicle compliance testing (e.g., for certification or Selective Enforcement Audit testing) in accordance with § 86.081–22(c)(1), to any setting within the physically adjustable range of that parameter, as determined by the Administrator in accordance with § 86.081–22(e)(3)(ii), prior to the performance of any tests. However, if the idle speed parameter is one which the Administrator has determined to be subject to adjustment, the Administrator shall not adjust it to a setting which causes a lower engine idle speed than will be possible within the physically adjustable range of the idle speed parameter on the vehicle when it has accumulated 4,000 miles, all other parameters being adjusted identically for the purpose of comparison. The Administrator, in making or specifying such adjustments, will consider the effect of the deviation from the manufacturer's recommended setting on emissions performance characteristics as well as the likelihood that similar settings will occur on in-use light-duty vehicles or light-duty trucks. In determining likelihood, the Administrator will consider factors such as, but not limited to, the effect of the adjustment on vehicle performance characteristics and surveillance information from similar in-use vehicles.

(c) Prior to performing emission testing pursuant to paragraph (a) of this section on an SEA test vehicle, the manufacturer may accumulate on each vehicle a number of miles equal to the greater of 4,000 miles, or the number of miles the manufacturer accumulated during certification on the emission-data vehicle corresponding to the configuration specified in the test order.

(1) Mileage accumulation must be performed in any manner using good engineering judgment to obtain emission results representative of normal production vehicles. This mileage accumulation must be consistent with the

new vehicle break-in instructions contained in the applicable vehicle owner's manual, if any.

(2) The manufacturer shall accumulate mileage at a minimum rate of 300 miles per vehicle during each 24-hour period, unless otherwise provided by the Administrator.

(i) The first 24-hour period for mileage accumulation shall begin as soon as authorized vehicle checks, inspections and preparations are completed on each vehicle.

(ii) The minimum mileage accumulation rate does not apply on weekends or holidays.

(iii) If the manufacturer's mileage accumulation target is less than the minimum rate specified (300 miles per day), then the minimum daily accumulation rate shall be equal to the manufacturer's mileage accumulation target.

(3) Mileage accumulation shall be completed on a sufficient number of test vehicles during consecutive 24-hour periods to assure that the number of vehicles tested per day fulfills the requirements of paragraph (g) of this section.

(d) The manufacturer shall not perform any maintenance on test vehicles after selection for testing nor shall the Administrator allow deletion of any test vehicle from the test sequence, unless requested by the manufacturer and approved by the Administrator before any test vehicle maintenance of deletion.

(e) The manufacturer will be allowed 24 hours to ship test vehicles from the assembly plant or storage facility to the test facility if the test facility is not located at the plant or storage facility or in close proximity to the plant or storage facility: Except, that the Administrator may approve more time based upon a request by the manufacturer accompanied by a satisfactory justification.

(f) If a vehicle cannot complete the mileage accumulation or emission tests because of vehicle malfunction, the manufacturer may request the Administrator to authorize the repair of that vehicle or its deletion from the test sequence.

(g) Whenever the manufacturer conducts testing pursuant to a test order issued under this subpart, the manufacturer shall notify the Administrator within one working day of receipt of the test order, which test facility will be used to comply with the test order and the number of available test cells at that facility. If no test cells are available at the desired facility, the manufacturer must provide alternate testing capability satisfactory to the Administrator.

(1) The manufacturer shall perform a combination of tests pursuant to paragraph (a) of this section so that a minimum of four tests are performed per 24 hour period, including voided tests, for each available test cell.

(2) The Administrator may approve a longer period based upon a request by a manufacturer accompanied by satisfactory justification.

(h) The manufacturer shall perform test vehicle selection, preparation, mileage accumulation, shipping, and testing in such a manner as to assure that the audit is performed in an expeditious manner.

(i) The manufacturer may retest any test vehicle after a fail decision has been reached in accordance with §86.610–98(d) based on the first test on each vehicle; except that the Administrator may approve retests at other times during the audit based upon a request by the manufacturer accompanied by a satisfactory justification. The manufacturer may test each vehicle a total of three times. The manufacturer shall test each vehicle the same number of times. The manufacturer may accumulate additional mileage on test vehicles before conducting retests, subject to the provisions of paragraph (c) of this section.

[59 FR 16301, Apr. 6, 1994, as amended at 60 FR 43898, Aug. 23, 1995; 62 FR 31235, June 6, 1997]

§86.609–84 Calculation and reporting of test results.

(a) Initial test results are calculated following the Federal Test Procedure specified in §86.608(a). Round the initial test results to the number of decimal places contained in the applicable emission standard, expressed to one additional significant figure. Rounding shall be done in accordance with ASTM E 29–90, Standard Practice for Using

Significant Digits in Test Data to Determine Conformance with Specifications. This procedure has been incorporated by reference (see § 86.1).

(b) Final test results for each test vehicle shall be calculated by summing the initial test results derived in paragraph (a) of this section for each test vehicle, dividing by the number of tests conducted on the vehicle, and rounding to the same number of decimal places contained in the applicable emission standard expressed to one additional significant figure. Rounding shall be done in accordance with ASTM E 29–90, Standard Practice for Using Significant Digits in Test Data to Determine Conformance with Specifications. This procedure has been incorporated by reference (see § 86.1).

(c)(1) The final deteriorated test results for each test vehicle shall be calculated by multiplying the final test results by the appropriate deterioration factor derived for the certification process for the engine family and model year to which the selected configuration belongs, and rounded to two significant figures. Rounding shall be done in accordance with ASTM E 29–90, Standard Practice for Using Significant Digits in Test Data to Determine Conformance with Specifications. This procedure has been incorporated by reference (see § 86.1). For the purposes of this paragraph, if a deterioration factor as computed during the certification process is less than one, that deterioration factor shall be one.

(2) There are no deterioration factors for light-duty vehicles tested in accordance with § 86.146–96 of subpart B of this part. Accordingly, for the fuel dispensing spitback test the term ''final deteriorated test results'' shall mean the final test results derived in paragraph (b) of this section for each test vehicle, rounded to the same number of significant figures contained in the applicable standard in accordance with ASTM E 29–90, Standard Practice for Using Significant Digits in Test Data to Determine Conformance with Specifications. This procedure has been incorporated by reference (see § 86.1).

(d) Within five working days after completion of testing of all vehicles pursuant to a test order, the manufacturer shall submit to the Administrator a report which includes the following information:

(1) The location and description of the manufacturer's exhaust emission test facilities which were utilized to conduct testing reported pursuant to this section;

(2) The applicable standards against which the vehicles were tested;

(3) Deterioration factors for the selected configuration.

(4) A description of the vehicle selection method used;

(5) For each test conducted,

(i) Test vehicle description including:

(A) Configuration and engine family identification.

(B) Year, make, build date, and model of vehicle.

(C) Vehicle Identification Number.

(D) Miles accumulated on vehicle.

(ii) Location where mileage accumulation was conducted and description of accumulation schedule.

(iii) Test number, date, initial test results, final results and final deteriorated test results for all valid and invalid exhaust emission tests, and the reason for invalidation.

(iv) A complete description of any modification, repair, preparation, maintenance and/or testing which was performed on the test vehicle and (A) has not been reported pursuant to any other paragraph of this subpart and (B) will not be performed on all other production vehicles.

(v) Carbon dioxide emission values for all valid and invalid exhaust emission tests;

(vi) Where a vehicle was deleted from the test sequence by authorization of the Administrator, the reason for the deletion;

(vii) Any other information the Administrator may request relevant to the determination as to whether the new motor vehicles being manufactured by the manufacturer do in fact conform with the regulations with respect to which the certificate of conformity was issued.

(6) The following statement and endorsement:

This report is submitted pursuant to sections 206 and 208 of the Clean Air Act. This Selective Enforcement Audit was conducted in complete conformance with all applicable regulations under 40 CFR part 86 et seq. and

the conditions of the test order. No emission related change(s) to production processes or quality control procedures for the vehicle configuration tested have been made between receipt of this test order and conclusion of the audit. All data and information reported herein is, to the best of

(Company Name)

knowledge, true and accurate. I am aware of the penalties associated with violations of the Clean Air Act and the regulations thereunder.

(Authorized Company Representative)

[41 FR 31483, July 28, 1976, as amended at 43 FR 4552, Feb. 2, 1978; 49 FR 48483, Dec. 12, 1984. Redesignated at 54 FR 2123, Jan. 19, 1989, and amended at 58 FR 16045, Mar. 24, 1993]

§86.609–96 Calculation and reporting of test results.

Section 86.609–96 includes text that specifies requirements that differ from §86.609–84. Where a paragraph in §86.609–84 is identical and applicable to §86.609–96, this is indicated by specifying the corresponding paragraph and the statement ''[Reserved]. For guidance see §86.609–84.'' Where a corresponding paragraph of §86.609–84 is not applicable, this is indicated by the statement ''[Reserved].''

(a) Initial test results are calculated following the test procedures specified in §86.608(a). Round the initial test results to the number of decimal places contained in the applicable emission standard expressed to one additional significant figure. Rounding is done in accordance with ASTM E 29–90, Standard Practice for Using Significant Digits in Test Data to Determine Conformance with Specifications. This procedure has been incorporated by reference (see §86.1).

(b) Final test results for each test vehicle are calculated by summing the initial test results within a specific FTP, CST, or Cold Temperature CO Test Procedure derived in paragraph (a) of this section for each test vehicle, dividing by the number of times that specific FTP, CST, or Cold Temperature CO Test Procedure has been conducted on the vehicle, and rounding to the same number of decimal places contained in the applicable emission standard expressed to one additional significant figure. Rounding is done in accordance with ASTM E 29–90, Standard Practice for Using Significant Digits in Test Data to Determine Conformance with Specifications. This procedure has been incorporated by reference (see §86.1).

(c) *Final deteriorated test results*—(1) *For each test vehicle.* The final deteriorated test results for each test vehicle are calculated by multiplying the final test results by the appropriate deterioration factor derived from the certification process for the engine family and model year to which the selected configuration belongs and rounding to the same number of decimal places contained in the applicable emission standard. Rounding is done in accordance with ASTM E 29–90, Standard Practice for Using Significant Digits in Test Data to Determine Conformance with Specifications. This procedure has been incorporated by reference (see §86.1). For the purpose of this paragraph, if a deterioration factor as computed during the certification process is less than one, that deterioration factor is one.

(2) *Exceptions.* (i) There are no deterioration factors for light-duty vehicle emissions obtained during testing in accordance with subpart O of this part. Accordingly, for the CST the term ''final deteriorated test results'' means the final test results derived in paragraph (b) of this section for each test vehicle, rounded to the same number of decimal places contained in the applicable emission standard. Rounding is done in accordance with ASTM E 29–90, Standard Practice for Using Significant Digits in Test Data to Determine Conformance with Specifications. This procedure has been incorporated by reference (see §86.1).

(ii) There are no deterioration factors for light-duty vehicles tested in accordance with §86.146–96. Accordingly, for the fuel dispensing spitback test the term ''final deteriorated test results'' means the final test results derived in paragraph (b) of this section for each test vehicle, rounded to the same number of significant figures contained in the applicable standard in accordance with ASTM E 29–90, Standard Practice for Using Significant Digits in Test Data to Determine Conformance

with Specifications. This procedure has been incorporated by reference (see § 86.1).

(d) [Reserved]. For guidance see § 86.609–84.

[58 FR 58423, Nov. 1, 1993]

§ 86.609–97 Calculation and reporting of test results.

Section 86.609–97 includes text that specifies requirements that differ from those specified in §§ 86.609–84 and 86.609–96. Where a paragraph in § 86.609–84 or § 86.609–96 is identical and applicable to § 86.609–97, this may be indicated by specifying the corresponding paragraph and the statement ''[Reserved]. For guidance see § 86.609–84.'' or ''[Reserved]. For guidance see § 86.609–96.''

(a) through (b) [Reserved]. For guidance see § 86.609–96.

(c) *Final deteriorated test results*—(1) *For each test vehicle.* The final deteriorated test results for each test vehicle tested according to subpart B, subpart C, or subpart R of this part are calculated by first multiplying or adding, as appropriate, the final test results by or to the appropriate deterioration factor derived from the certification process for the engine or evaporative/refueling family and model year to which the selected configuration belongs, and then by multiplying by the appropriate reactivity adjustment factor, if applicable, and rounding to the same number of decimal places contained in the applicable emission standard. Rounding is done in accordance with the Rounding-Off Method specified in ASTM E29–90, Standard Practice for Using Significant Digits in Test Data to Determine Conformance with Specifications. This procedure is incorporated by reference (see § 86.1). For the purpose of this paragraph (c), if a multiplicative deterioration factor as computed during the certification process is less than one, that deterioration factor is one. If an additive deterioration factor as computed during the certification process is less than zero, that deterioration factor will be zero.

(c)(2) [Reserved]. For guidance see § 86.609–96.

(d) [Reserved]. For guidance see § 86.609–84.

[62 FR 31235, June 6, 1997]

§ 86.609–98 Calculation and reporting of test results.

(a) Initial test results are calculated following the test procedures specified in § 86.608–98(a). Round the initial test results to the number of decimal places contained in the applicable emission standard expressed to one additional significant figure. Rounding is done in accordance with ASTM E 29–67, (reapproved 1980) (as referenced in § 86.094–28 (a)(4)(i)(B)(*2*)(*ii*).

(b) Final test results for each test vehicle are calculated by summing the initial test results derived in paragraph (a) of this section for each test vehicle, dividing by the number of times that specific test has been conducted on the vehicle, and rounding to the same number of decimal places contained in the applicable standard expressed to one additional significant figure. Rounding is done in accordance with ASTM E 29–67, (reapproved 1980) (as referenced in § 86.094–28 (a)(4)(i)(B)(*2*)(*ii*).

(c) *Final deteriorated test results*—(1) *For each test vehicle.* The final deteriorated test results for each light-duty vehicle tested for exhaust emissions and/or refueling emissions according to subpart B, subpart C, or subpart R of this part are calculated by first multiplying or adding, as appropriate, the final test results by or to the appropriate deterioration factor derived from the certification process for the engine or evaporative/refueling family and model year to which the selected configuration belongs, and then by multiplying by the appropriate reactivity adjustment factor, if applicable, and rounding to the same number of decimal places contained in the applicable emission standard. Rounding is done in accordance with the Rounding-Off Method specified in ASTM E29–90, Standard Practice for Using Significant Digits in Test Data to Determine Conformance with Specifications. This procedure has been incorporated by reference (see § 86.1). For the purpose of this paragraph (c), if a multiplicative deterioration factor as computed during the certification process is less than one, that deterioration factor is one. If an additive deterioration factor as computed during the certification process is less than zero, that deterioration factor will be zero.

(2) *Exceptions.* There are no deterioration factors for light-duty vehicle emissions obtained during testing in accordance with subpart O of this part or with §86.146–96. Accordingly, for the CST and the fuel dispensing spitback test the term ''final deteriorated test results'' means the final test results derived in paragraph (b) of this section for each test vehicle, rounded to the same number of decimal places contained in the applicable emission standard. Rounding is done in accordance with ASTM E 29–67, (reapproved 1980) (as referenced in §86.094–28 (a)(4)(i)(B)(*2*)(*ii*).

(d) Within five working days after completion of testing of all vehicles pursuant to a test order, the manufacturer shall submit to the Administrator a report which includes the following information:

(1) The location and description of the manufacturer's emission test facilities which were utilized to conduct testing reported pursuant to this section.

(2) The applicable standards against which the vehicles were tested.

(3) Deterioration factors for the selected configuration.

(4) A description of the vehicle selection method used.

(5) For each test conducted.

(i) Test vehicle description including:

(A) Configuration, engine family, and refueling family identification.

(B) Year, make, build date, and model of vehicle.

(C) Vehicle Identification Number.

(D) Miles accumulated on vehicle.

(ii) Location where mileage accumulation was conducted and description of accumulation schedule.

(iii) Test number, date initial test results, final results and final deteriorated test results for all valid and invalid exhaust emission tests, and the reason for invalidation.

(iv) A complete description of any modification, repair, preparation, maintenance and/or testing which was performed on the test vehicle and:

(A) Has not been reported pursuant to any other paragraph of this subpart; and

(B) Will not be performed on all other production vehicles.

(v) Carbon dioxide emission values for all valid and invalid exhaust emission tests.

(vi) Where a vehicle was deleted from the test sequence by authorization of the Administrator, the reason for the deletion.

(vii) Any other information the Administrator may request relevant to the determination as to whether the new motor vehicles being manufactured by the manufacturer do in fact conform with the regulations with respect to which the certificate of conformity was issued.

(6) The following statement and endorsement:

This report is submitted pursuant to sections 206 and 208 of the Clean Air Act. This Selective Enforcement Audit was conducted in complete conformance with all applicable regulations under 40 CFR part 86 and the conditions of the test order. No emission related change(s) to production processes or quality control procedures for the vehicle configuration tested have been made between receipt of this test order and conclusion of the audit. All data and information reported herein is, to the best of

_____

(Company Name)

knowledge, true and accurate. I am aware of the penalties associated with violations of the Clean Air Act and the regulations thereunder.

_____

(Authorized Company Representative)

[59 FR 16303, Apr. 6, 1994, as amended at 62 FR 31236, June 6, 1997]

§86.610–96 Compliance with acceptable quality level and passing and failing criteria for Selective Enforcement Audits.

(a) The prescribed acceptable quality level is 40 percent.

(b) A failed vehicle is one whose final deteriorated test results pursuant to §86.609–96(c), for one or more of the applicable pollutants, including fuel spitback, exceed the applicable emission standard. For the CST as described in subpart O of this part, a vehicle fail determination is made if the final deteriorated test results for HC and/or CO emissions from any CST exceed the applicable emission standard.

(c) *Pass/fail criteria*—(1) *FTP criteria.* The manufacturer must test vehicles comprising the test sample until a pass

decision is reached for all pollutants, or a fail decision is reached for one pollutant. A pass decision is reached when the cumulative number of failed vehicles, as defined in paragraph (b) of this section, for each pollutant is less than or equal to the fail decision number appropriate to the cumulative number of vehicles tested. A fail decision is reached when the cumulative number of failed vehicles for one pollutant is greater than or equal to the fail decision number appropriate to the cumulative number of vehicles tested. The pass and fail decision numbers associated with the cumulative number of vehicles tested are determined by use of the tables in appendix XI to this part appropriate for the annual projected sales as made by the manufacturer in its report submitted under § 600.207–80(a)(2) of this chapter (Automobile Fuel Economy Regulations). In the tables in appendix XI to this part, sampling plan ''stage'' refers to the cumulative number of vehicles tested. Once a pass decision has been made for a particular pollutant, the number of vehicles whose final deteriorated test results exceed the emission standard for that pollutant may not be considered any further for purposes of the audit.

(2) *CST criteria.* A pass/fail decision is based on the CST in its entirety rather than on a per pollutant basis. The manufacturer must test vehicles comprising the test sample until a pass or fail decision is reached based on CST testing. A pass decision is reached when the cumulative number of failed vehicles, as defined in paragraph (b) of this section, based on CST testing is less than or equal to the pass decision number appropriate to the cumulative number of vehicles tested. A fail decision is reached when the cumulative number of failed vehicles based on CST testing is greater than or equal to the fail decision number appropriate to the cumulative number of vehicles tested. The pass and fail decision numbers associated with the cumulative number of vehicles tested are determined by use of the tables in appendix XI to this part appropriate for the annual projected sales as made by the manufacturer in its report submitted under § 600.207–80(a)(2) of this chapter (Automobile Fuel Economy Regulations). In the tables in appendix XI to this part, sampling plan ''stage'' refers to the cumulative number of vehicles tested. Once a pass decision has been made based on CST testing, the number of vehicles whose final deteriorated test results exceed any of the emission standards for any CST may not be considered any further for purposes of the audit.

(d) Passing or failing of an SEA occurs when the decision is made on the last vehicle required to make a decision under paragraph (c) of this section.

(e) The Administrator may terminate testing earlier than required in paragraph (c) of this section.

[58 FR 58424, Nov. 1, 1993]

§ 86.610–98 Compliance with acceptable quality level and passing and failing criteria for Selective Enforcement Audits.

(a) The prescribed acceptable quality level is 40 percent.

(b) A failed vehicle is one whose final deteriorated test results pursuant to § 86.609–98(c) exceed at least one of the applicable emission standards associated with the test procedures pursuant to § 86.608–98(a).

(c)(1) *Pass/fail criteria.* The manufacturer shall test vehicles comprising the test sample until a pass decision is reached for all of the pollutants associated with all of the test procedures pursuant to § 86.608–98(a) or a fail decision is reached for one of these pollutants. A pass decision is reached when the cumulative number of failed vehicles, as defined in paragraph (b) of this section, for each pollutant is less than or equal to the fail decision number appropriate to the cumulative number of vehicles tested. A fail decision is reached when the cumulative number of failed vehicles for one pollutant is greater than or equal to the fail decision number appropriate to the cumulative number of vehicles tested. The pass and fail decision numbers associated with the cumulative number of vehicles tested are determined by use of the tables in appendix XI of this part appropriate for the annual projected sales as made by the manufacturer in its report submitted under § 600.207–80(a)(2) of this chapter (Automobile

Fuel Economy Regulations). In the tables in appendix XI of this part, sampling plan ''stage'' refers to the cumulative number of vehicles tested. Once a pass decision has been made for a particular pollutant associated with a particular test procedure pursuant to §86.608–98(a), the number of vehicles whose final deteriorated test results exceed the emission standard for that pollutant may not be considered any further for purposes of the audit.

(2) CST criteria only. For CST testing pursuant to subpart O, a pass or fail decision is determined according to the pass/fail criteria described in paragraph (c)(1) of this section, except that for each vehicle, the CST in its entirety is considered one pollutant.

(d) Passing or failing of an SEA audit occurs when the decision is made on the last vehicle required to make a decision under paragraph (c) of this section.

(e) The Administrator may terminate testing earlier than required in paragraph (c) of this section.

[59 FR 16304, Apr. 6, 1994]

§86.612–84 Suspension and revocation of certificates of conformity.

(a) The certificate of conformity is suspended with respect to any vehicle failing pursuant to paragraph (b) of §86.610 effective from the time that testing of that vehicle is completed.

(b) The Administrator may suspend the certificate of conformity for a configuration which does not pass a Selective Enforcement Audit pursuant to paragraph §86.610(c) based on the first test, or all tests, conducted on each vehicle. This suspension will not occur before ten days after failure to pass the audit.

(c) If the results of vehicle testing pursuant to these regulations indicate the vehicles of a particular configuration produced at more than one plant do not conform to the regulations with respect to which the certificate of conformity was issued, the Administrator may suspend the certificate of conformity with respect to that configuration for vehicles manufactured by the manufacturer in other plants of the manufacturer.

(d) The Administrator will notify the manufacturer in writing of any suspension or revocation of a certificate of conformity in whole or in part: Except, That the certificate of conformity is immediately suspended with respect to any vehicle failing pursuant to §86.610(a) and as provided for in paragraph (a) of this section.

(e) The Administrator may revoke a certificate of conformity for a configuration when the certificate has been suspended pursuant to paragraph (b) or (c) of this section if the proposed remedy for the nonconformity, as reported by the manufacturer to the Administrator, is one requiring a design change(s) to the engine and/or emission control system as described in the Application for Certification of the affected configuration.

(f) Once a certificate has been suspended for a failed vehicle as provided for in paragraph (a) of this section, the manufacturer must take the following actions:

(1) Before the certificate is reinstated for that failed vehicle,

(i) Remedy the nonconformity, and

(ii) Demonstrate that the vehicle's final deteriorated test results conform to the applicable emission standards or family particulate emission limits, as defined in part 86 by retesting the vehicle in accordance with these regulations.

(2) Submit a written report to the Administrator within thirty days after successful completion of testing on the failed vehicle, which contains a description of the remedy and test results for the vehicle in addition to other information that may be required by this regulation.

(g) Once a certificate has been suspended pursuant to paragraph (b) or (c) of this section, the manufacturer must take the following actions before the Administrator will consider reinstating such certificate:

(1) Submit a written report to the Administrator which identifies the reason for the noncompliance of the vehicles, describes the proposed remedy, including a description of any proposed quality control and/or quality assurance measures to be taken by the manufacturer to prevent the future occurrence of the problem, and states the date on which the remedies will be implemented, and

(2) Demonstrate that the vehicle configuration for which the certificate of conformity has been suspended does in fact comply with these regulations by testing vehicles selected from normal production runs of that vehicle configuration, at the plant(s) or the facilities specified by the Administrator, in accordance with the conditions specified in the initial test order; *except*, that if the Administrator has not revoked the certificate pursuant to paragraph (e) of this section and if the manufacturer elects to continue testing individual vehicles after suspension of a certificate, the certificate is reinstated for any vehicle actually determined to have its final deteriorated test results in conformance with the applicable standards through testing in accordance with the applicable test procedures.

(h) Once a certificate for a failed configuration has been revoked under paragraph (e) of this section and the manufacturer desires to introduce into commerce a modified version of that configuration, the following actions will be taken before the Administrator may issue a certificate for the new configuration:

(1) If the Administrator determines that the proposed change(s) in vehicle design may have an effect on emission performance deterioration and/or fuel economy, he shall notify the manufacturer within 5 working days after receipt of the report in paragraph (g) of this section whether subsequent testing under this subpart will be sufficient to evaluate the proposed change(s) or whether additional testing will be required; and

(2) After implementing the change(s) intended to remedy the nonconformity, the manufacturer shall demonstrate that the modified vehicle configuration does in fact conform with these regulations by testing vehicles selected from normal production runs of that modified vehicle configuration in accordance with the conditions specified in the initial test order. The Administrator shall consider this testing to satisfy the testing requirements of § 86.079–32 or § 86.079–33 if the Administrator had so notified the manufacturer. If the subsequent testing results in passing of the audit, the Administrator shall reissue or amend the certificate, if necessary, to include that configuration: *Provided*, That the manufacturer has satisfied the testing requirements specified in paragraph (h)(1) of this section. If the subsequent audit is failed, the revocation remains in effect. Any design change approvals under this subpart are limited to the modification of the configuration specified by the test order.

(i) A manufacturer may at any time subsequent to an initial suspension of a certificate of conformity with respect to a test vehicle pursuant to paragraph (a) of this section, but not later than fifteen (15) days or such other period as may be allowed by the Administrator after notification of the Administrator's decision to suspend or revoke a certificate of conformity in whole or in part pursuant to paragraph (b), (c) or (e) of this section, request that the Administrator grant such manufacturer a hearing as to whether the tests have been properly conducted or any sampling methods have been properly applied.

(j) After the Administrator suspends or revokes a certificate of conformity pursuant to this section or notifies a manufacturer of his intent to suspend, revoke or void a certificate of conformity under paragraph (d) of § 86.084–30, and prior to the commencement of a hearing under § 86.614, if the manufacturer demonstrates to the Administrator's satisfaction that the decision to suspend, revoke or void the certificate was based on erroneous information, the Administrator shall reinstate the certificate.

(k) To permit a manufacturer to avoid storing non-test vehicles when conducting an audit of a configuration subsequent to suspension or revocation of the certificate of conformity for that configuration, resulting from failure of the initial audit of that configuration, he may request that the Administrator conditionally reinstate the certificate for that configuration. The Administrator may reinstate the certificate subject to the condition that the manufacturer consents to recall all vehicles of that configuration produced from the time the certificate is conditionally reinstated if the configuration

fails the subsequent audit and to remedy any nonconformity at no expense to the owner.

[41 FR 31483, July 28, 1976, as amended at 43 FR 4553, Feb. 2, 1978; 49 FR 48484, Dec. 12, 1984. Redesignated at 54 FR 2123, Jan. 19, 1989]

§86.612–97 Suspension and revocation of certificates of conformity.

(a) The certificate of conformity is immediately suspended with respect to any vehicle failing pursuant to §86.610(b) effective from the time that testing of that vehicle is completed.

(b)(1) *Selective Enforcement Audits.* The Administrator may suspend the certificate of conformity for a configuration that does not pass a Selective Enforcement Audit pursuant to §86.610–98(c) based on the first test, or all tests, conducted on each vehicle. This suspension will not occur before ten days after failure to pass the audit.

(2) *California Assembly-Line Quality Audit Testing.* The Administrator may suspend the certificate of conformity for a 50-state family or configuration tested in accordance with procedures prescribed under §86.608 that the Executive Officer has determined to be in non-compliance with one or more applicable pollutants based on the requirements specified in Chapter 1 or Chapter 2 of the California Regulatory Requirements Applicable to the National Low Emission Vehicle Program (October, 1996), if the results of vehicle testing conducted by the manufacturer do not meet the acceptable quality level criteria pursuant to §86.610. The California Regulatory Requirements Applicable to the National Low Emission Vehicle Program (October, 1996) are incorporated by reference (see §86.1). A vehicle that is tested by the manufacturer pursuant to California Assembly-Line Quality Audit Test Procedures, in accordance with procedures prescribed under §86.608, and determined to be a failing vehicle will be treated as a failed vehicle described in §86.610(b), unless the manufacturer can show that the vehicle would not be considered a failed vehicle using the test procedures specified in §86.608. This suspension will not occur before ten days after the manufacturer receives written notification that the Administrator has determined the 50-state family or configuration exceeds one or more applicable federal standards.

(c)(1) *Selective Enforcement Audits.* If the results of vehicle testing pursuant to the requirements of this subpart indicates the vehicles of a particular configuration produced at more than one plant do not conform to the regulations with respect to which the certificate of conformity was issued, the Administrator may suspend the certificate of conformity with respect to that configuration for vehicles manufactured by the manufacturer in other plants of the manufacturer.

(2) *California Assembly-Line Quality Audit Testing.* If the Administrator determines that the results of vehicle testing pursuant to the requirements specified in Chapter 1 or Chapter 2 of the California Regulatory Requirements Applicable to the National Low Emission Vehicle Program (October, 1996) and the procedures prescribed in §86.608 indicate the vehicles of a particular 50-state engine family or configuration produced at more than one plant do not conform to applicable federal regulations with respect to which a certificate of conformity was issued, the Administrator may suspend, pursuant to paragraph (b)(2) of this section, the certificate of conformity with respect to that engine family or configuration for vehicles manufactured in other plants of the manufacturer. The California Regulatory Requirements Applicable to the National Low Emission Vehicle Program (October, 1996) are incorporated by reference (see §86.1).

(d) The Administrator will notify the manufacturer in writing of any suspension or revocation of a certificate of conformity in whole or in part: Except, that the certificate of conformity is immediately suspended with respect to any vehicle failing pursuant to §86.610(b) and as provided for in paragraph (a) of this section.

(e)(1) *Selective Enforcement Audits.* The Administrator may revoke a certificate of conformity for a configuration when the certificate has been suspended pursuant to paragraph (b)(1) or (c)(1) of this section if the proposed

remedy for the nonconformity, as reported by the manufacturer to the Administrator, is one requiring a design change(s) to the engine and/or emission control system as described in the Application for Certification of the affected configuration.

(2) *California Assembly-Line Quality Audit Testing.* The Administrator may revoke a certificate of conformity for an engine family or configuration when the certificate has been suspended pursuant to paragraph (b)(2) or (c)(2) of this section if the proposed remedy for the nonconformity, as reported by the manufacturer to the Executive Officer and/or the Administrator, is one requiring a design change(s) to the engine and/or emission control system as described in the Application for Certification of the affected engine family or configuration.

(f) Once a certificate has been suspended for a failed vehicle as provided for in paragraph (a) of this section, the manufacturer must take the following actions:

(1) Before the certificate is reinstated for that failed vehicle—

(i) Remedy the nonconformity; and

(ii) Demonstrate that the vehicle's final deteriorated test results conform to the applicable emission standards or family particulate emission limits, as defined in this part 86 by retesting the vehicle in accordance with the requirements of this subpart.

(2) Submit a written report to the Administrator within thirty days after successful completion of testing on the failed vehicle, which contains a description of the remedy and test results for the vehicle in addition to other information that may be required by this subpart.

(g) Once a certificate has been suspended pursuant to paragraph (b) or (c) of this section, the manufacturer must take the following actions before the Administrator will consider reinstating such certificate:

(1) Submit a written report to the Administrator which identifies the reason for the noncompliance of the vehicles, describes the proposed remedy, including a description of any proposed quality control and/or quality assurance measures to be taken by the manufacturer to prevent the future occurrence of the problem, and states the date on which the remedies will be implemented.

(2) Demonstrate that the engine family or configuration for which the certificate of conformity has been suspended does in fact comply with the requirements of this subpart by testing vehicles selected from normal production runs of that engine family or configuration at the plant(s) or the facilities specified by the Administrator, in accordance with:

(i) The conditions specified in the initial test order pursuant to § 86.603 for a configuration suspended pursuant to paragraph (b)(1) or (c)(1) of this section; or

(ii) The conditions specified in a test order pursuant to § 86.603 for an engine family or configuration suspended pursuant to paragraph (b)(2) or (c)(2) of this section.

(3) If the Administrator has not revoked the certificate pursuant to paragraph (e) of this section and if the manufacturer elects to continue testing individual vehicles after suspension of a certificate, the certificate is reinstated for any vehicle actually determined to have its final deteriorated test results in conformance with the applicable standards through testing in accordance with the applicable test procedures.

(4) In cases where the Administrator has suspended a certificate of conformity for a 50-state engine family or configuration pursuant to paragraph (b)(2) or (c)(2) of this section, manufacturers may request in writing that the Administrator reinstate the certificate of an engine family or configuration when, in lieu of the actions described in paragraphs (g) (1) and (2) of this section, the manufacturer has agreed to comply with Chapter 3 of the California Regulatory Requirements Applicable to the National Low Emission Vehicle Program (October, 1996), provided an Executive Order is in place for the engine family or configuration. The California Regulatory Requirements Applicable to the National Low Emission Vehicle Program (October, 1996) are incorporated by reference (see § 86.1).

(h) Once a certificate for a failed engine family or configuration has been revoked under paragraph (e) (1) or (2) of

this section and the manufacturer desires to introduce into commerce a modified version of that engine family or configuration, the following actions will be taken before the Administrator may issue a certificate for the new engine family or configuration:

(1) If the Administrator determines that the proposed change(s) in vehicle design may have an effect on emission performance deterioration and/or fuel economy, he/she shall notify the manufacturer within five working days after receipt of the report in paragraph (g)(1) of this section or after receipt of information pursuant to paragraph (g)(4) of this section whether subsequent testing under this subpart will be sufficient to evaluate the proposed change(s) or whether additional testing will be required.

(2) After implementing the change(s) intended to remedy the nonconformity, the manufacturer shall demonstrate:

(i) If the certificate was revoked pursuant to paragraph (e)(1) of this section, that the modified vehicle configuration does in fact conform with the requirements of this subpart by testing vehicles selected from normal production runs of that modified vehicle configuration in accordance with the conditions specified in the initial test order pursuant to § 86.603. The Administrator shall consider this testing to satisfy the testing requirements of § 86.079–32 or § 86.079–33 if the Administrator had so notified the manufacturer. If the subsequent testing results in a pass decision pursuant to the criteria in § 86.610–96(c), the Administrator shall reissue or amend the certificate, if necessary, to include that configuration: *Provided*, that the manufacturer has satisfied the testing requirements specified in paragraph (h)(1) of this section. If the subsequent audit results in a fail decision pursuant to the criteria in § 86.610(c), the revocation remains in effect. Any design change approvals under this subpart are limited to the modification of the configuration specified by the test order.

(ii) If the certificate was revoked pursuant to paragraph (e)(2) of this section, that the modified engine family or configuration does in fact conform with the requirements of this subpart by testing vehicles selected from normal production runs of that modified engine family or configuration in accordance with the conditions specified in a test order pursuant to § 86.603. The Administrator shall consider this testing to satisfy the testing requirements of § 86.079–32 or § 86.079–33 if the Administrator had so notified the manufacturer. If the subsequent testing results in a pass decision pursuant to § 86.610(c), the Administrator shall reissue or amend the certificate as necessary: *Provided*, That the manufacturer has satisfied the testing requirements specified in paragraph (h)(1) of this section. If the subsequent testing results in a fail decision pursuant to § 86.610(c), the revocation remains in effect. Any design change approvals under this subpart are limited to the modification of engine family or configuration specified by the test order.

(3) In cases where the Administrator has revoked a certificate of conformity for a 50-state engine family or configuration pursuant to paragraph (e)(2) of this section, manufacturers may request in writing that the Administrator reissue the certificate of an engine family or configuration when, in lieu of the actions described in paragraphs (h) (1) and (2) of this section, the manufacturer has complied with Chapter 3 of the California Regulatory Requirements Applicable to the National Low Emission Vehicle Program (October, 1996), provided an Executive Order is in place for the engine family or configuration. The California Regulatory Requirements Applicable to the National Low Emission Vehicle Program (October, 1996) are incorporated by reference (see § 86.1).

(i) A manufacturer may at any time subsequent to an initial suspension of a certificate of conformity with respect to a test vehicle pursuant to paragraph (a) of this section, but not later than fifteen (15) days or such other period as may be allowed by the Administrator after notification of the Administrator's decision to suspend or revoke a certificate of conformity in whole or in part pursuant to paragraph (b), (c) or (e) of this section, request that the Administrator grant such manufacturer a hearing as to whether the tests have

been properly conducted or any sampling methods have been properly applied.

(j) After the Administrator suspends or revokes a certificate of conformity pursuant to this section or notifies a manufacturer of his intent to suspend, revoke or void a certificate of conformity under § 86.084–30(d), and prior to the commencement of a hearing under § 86.614, if the manufacturer demonstrates to the Administrator's satisfaction that the decision to suspend, revoke or void the certificate was based on erroneous information, the Administrator shall reinstate the certificate.

(k) To permit a manufacturer to avoid storing non-test vehicles when conducting testing of an engine family or configuration subsequent to suspension or revocation of the certificate of conformity for that engine family or configuration pursuant to paragraph (b), (c), or (e) of this section, the manufacturer may request that the Administrator conditionally reinstate the certificate for that engine family or configuration. The Administrator may reinstate the certificate subject to the condition that the manufacturer consents to recall all vehicles of that engine family or configuration produced from the time the certificate is conditionally reinstated if the engine family or configuration fails the subsequent testing and to remedy any nonconformity at no expense to the owner.

[62 FR 31236, June 6, 1997]

§ 86.614–84 Hearings on suspension, revocation, and voiding of certificates of conformity.

(a) *Applicability*. The procedures prescribed by this section apply whenever a manufacturer requests a hearing under § 86.084–30(d)(6)(i), § 86.084–30(d)(7), or § 86.612(i).

(b) *Definitions.* The following definitions shall be applicable to this section:

(1) *Hearing Clerk* shall mean the Hearing Clerk of the Environmental Protection Agency.

(2) *Manufacturer* refers to a manufacturer contesting a suspension or revocation order directed at the manufacturer.

(3) *Party* shall include the Agency and the manufacturer.

(4) *Presiding Officer* shall mean an Administrative Law Judge appointed pursuant to 5 U.S.C. 3105 (see also 5 CFR part 930 as amended).

(5) *Environmental Appeals Board* shall mean the Board within the Agency described in section 1.25 of this title. The Administrator delegates to the Environmental Appeals Board authority to issue final decisions in appeals filed under this subpart. Appeals directed by the Administrator, rather than to the Environmental Appeals Board, will not be considered. This delegation of authority to the Environmental Appeals Board does not preclude the Environmental Appeals Board from referring an appeal or a motion filed under this subpart to the Administrator for decision when the Environmental Appeals Board, in its discretion, deems it appropriate to do so. When an appeal or motion is referred to the Administrator, all parties shall be so notified and the rules in this part referring to the Environmental Appeals Board shall be interpreted as referring to the Administrator.

(c) *Request for public hearing.* (1) If the manufacturer disagrees with the Administrator's decision to suspend, revoke, or void a certificate or disputes the basis for an automatic suspension under § 86.612(a), it may request a public hearing as described in this section. Requests for such a hearing shall be filed with the Administrator not later than 15 days after the Administrator's notification of his decision to suspend or revoke unless otherwise specified by the Administrator. Two copies of such request shall simultaneously be served upon the Director of the Manufacturers Operations Division and two copies filed with the Hearing Clerk. Failure of the manufacturer to request a hearing within the time provided shall constitute a waiver of his right to such a hearing. Subsequent to the expiration of the period for requesting a hearing as of right, the Administrator may, in his discretion and for good cause shown, grant the manufacturer a hearing to contest the suspension or revocation.

(2) The request for a public hearing shall contain:

(i) A statement as to which vehicle configurations or engine families are to be the subject of the hearing;

(ii) A concise statement of the issues to be raised by the manufacturer at the hearing for each vehicle configuration or engine family or vehicle for which the manufacturer has requested the hearing: *Provided, however,* That in the case of a hearing request under paragraph § 86.612(i), the hearing is restricted to the following issues:

(A) Whether tests were conducted in accordance with applicable regulations under this part;

(B) Whether test equipment was properly calibrated and functioning;

(C) Whether sampling procedures specified in appendix XI of this part were followed; and

(D) Whether there exists a basis for distinguishing vehicles produced at plants other than the one from which vehicles were selected which would invalidate the Administrator's decision under § 86.612(c);

(iii) A statement specifying reasons the manufacturer believes he will prevail on the merits on each of the issues so raised; and

(iv) A summary of the evidence which supports the manufacturer's position on each of the issues so raised.

(3) A copy of all requests for public hearings shall be kept on file in the Office of the Hearing Clerk and shall be made available to the public during Agency business hours.

(d) *Summary decision.* (1) In the case of a hearing requested under § 86.612(i), when it clearly appears from the data and other information contained in the request for a hearing that there is no genuine and substantial question of fact with respect to the issues specified in § 86.614(c)(2)(ii), the Administrator shall enter an order denying the request for a hearing. In addition, if the original decision to suspend or revoke a certificate of conformity was made under § 86.612(d) prior to the decision to deny the request for a hearing, the order denying the request will reaffirm the suspension or revocation.

(2) In the case of a hearing requested under § 86.084–30(d)(6)(i), to challenge a proposed suspension of a certificate of conformity for the reasons specified in § 86.084–30(d)(1) (i) or (ii), when it clearly appears from the data and other information contained in the request for a hearing that there is no genuine and substantial question of fact with respect to the issue of whether the refusal to comply with the provisions of a test order or any other requirement of § 86.603 was caused by conditions and circumstances outside the control of the manufacturer, the Administrator will enter an order denying the request for a hearing, and suspending the certificate of conformity.

(3) Any order issued under paragraph (d) (1) or (2) of this section shall have the force and effect of a final decision of the Administrator, as issued pursuant to paragraph (w)(4) of this section.

(4) If the Administrator determines that a genuine and substantial question of fact does exist with respect to any of the issues referred to in paragraphs (d)(1) and (2) of this section, he shall grant the request for a hearing and publish a notice of public hearing in accordance with paragraph (h) of this section.

(e) *Filing and service.* (1) An original and two copies of all documents or papers required or permitted to be filed pursuant to this section shall be filed with the Hearing Clerk. Filing shall be deemed timely if mailed, as determined by the postmark, to the Hearing Clerk within the time allowed by this section. If filing is to be accomplished by mailing, the documents shall be sent to the address set forth in the notice of public hearing as described in paragraph (h) of this section.

(2) To the maximum extent possible, testimony shall be presented in written form. Copies of written testimony shall be served upon all parties as soon as practicable prior to the start of the hearing. A certificate of service shall be provided on or accompany each document or paper filed with the Hearing Clerk. Documents to be served upon the Director of the Manufacturers Operations Division shall be sent by registered mail to: Director, Manufacturers Operations Division, U.S. Environmental Protection Agency (EN–340), 401 M Street, SW., WSM, Washington, DC 20460. Service by registered mail is complete upon mailing.

(f) *Time.* (1) In computing any period of time prescribed or allowed by this

section, except as otherwise provided, the day of the act or event from which the designated period of time begins to run shall not be included. Saturdays, Sundays, and Federal legal holidays shall be included in computing any such period allowed for the filing of any document or paper, except that when such period expires on a Saturday, Sunday, or Federal legal holiday, such period shall be extended to include the next following business day.

(2) A prescribed period of time within which a party is required or permitted to do an act shall be computed from the time of service, except that when service is accomplished by mail, three days shall be added to the prescribed period.

(g) *Consolidation.* The Administrator or the Presiding Officer in his discretion may consolidate two or more proceedings to be held under this section for the purpose of resolving one or more issues whenever it appears that such consolidation will expedite or simplify consideration of such issues. Consolidation shall not affect the right of any party to raise issues that could have been raised if consolidation had not occurred.

(h) *Notice of public hearings.* (1) Notice of a public hearing under this section shall be given by publication in the FEDERAL REGISTER and by such other means as the Administrator finds appropriate to provide notice to the public. To the extent possible hearings under this section shall be scheduled to commence within 14 days of receipt of the application in paragraph (c) of this section.

(i) *Amicus curiae.* Persons not parties to the proceeding wishing to file briefs may do so by leave of the Presiding Officer granted on motion. A motion for leave shall identify the interest of the applicant and shall state the reasons why the proposed amicus brief is desirable.

(j) *Presiding Officer.* The Presiding Officer shall have the duty to conduct a fair and impartial hearing in accordance with 5 U.S.C. sections 554, 556 and 557 and to take all necessary action to avoid delay in the disposition of the proceedings and to maintain order. He shall have all power consistent with Agency rule and with the Administrative Procedure Act necessary to this end, including the following:

(1) To administer oaths and affirmations;

(2) To rule upon offers of proof and exclude irrelevant or repetitious material;

(3) To regulate the course of the hearings and the conduct of the parties and their counsel therein;

(4) To hold conferences for simplification of the issues or any other proper purpose;

(5) To consider and rule upon all procedural and other motions appropriate in such proceedings;

(6) To require the submission of direct testimony in written form with or without affidavit whenever, in the opinion of the Presiding Officer, oral testimony is not necessary for full and true disclosure of the facts;

(7) To enforce agreements and orders requiring access as authorized by law;

(8) To require the filing of briefs on any matter on which he is required to rule;

(9) To require any party or any witness, during the course of the hearing, to state his position on any issue;

(10) To take or cause depositions to be taken whenever the ends of justice would be served thereby;

(11) To make decisions or recommend decisions to resolve the disputed issues on the record of the hearing;

(12) To issue, upon good cause shown, protective orders as described in paragraph (n) of this section.

(k) *Conferences.* (1) At the discretion of the Presiding Officer, conferences may be held prior to or during any hearing. The Presiding Officer shall direct the Hearing Clerk to notify all parties of the time and location of any such conference. At the discretion of the Presiding Officer, persons other than parties may attend. At a conference the Presiding Officer may:

(i) Obtain stipulations and admissions, receive requests and order depositions to be taken, identify disputed issues of fact and law, and require or allow the submission of written testimony from any witness or party;

(ii) Set a hearing schedule for as many of the following as are deemed necessary by the Presiding Officer:

(A) Oral and written statements;

(B) Submission of written direct testimony as required or authorized by the Presiding Officer;

(C) Oral direct and cross-examination of a witness where necessary as prescribed in paragraph (p) of this section: and

(D) Oral argument, if appropriate.

(iii) Identify matters of which official notice may be taken;

(iv) Consider limitation of the number of expert and other witnesses;

(v) Consider the procedure to be followed at the hearing; and

(vi) Consider any other matter that may expedite the hearing or aid in the disposition of the issue.

(2) The results of any conference including all stipulations shall, if not transcribed, be summarized in writing by the Presiding Officer and made part of the record.

(l) *Primary discovery* (exchange of witness lists and documents). (1) At a prehearing conference or within some reasonable time set by the Presiding Officer prior to the hearing, each party shall make available to the other parties the names of the expert and other witnesses the party expects to call, together with a brief summary of their expected testimony and a list of all documents and exhibits which the party expects to introduce into evidence. Thereafter, witnesses, documents, or exhibits may be added and summaries of expected testimony amended upon motion by a party.

(2) The Presiding Officer, may, upon motion by a party or other person, and for good cause shown, by order (i) restrict or defer disclosure by a party of the name of a witness or a narrative summary of the expected testimony of a witness, and (ii) prescribe other appropriate measures to protect a witness. Any party affected by any such action shall have an adequate opportunity, once he learns the name of a witness and obtains the narrative summary of his expected testimony, to prepare for the presentation of his case.

(m) *Other discovery*. (1) Except as so provided by paragraph (l) of this section, further discovery, under this paragraph, shall be permitted only upon determination by the Presiding Officer:

(i) That such discovery will not in any way unreasonably delay the proceeding;

(ii) That the information to be obtained is not obtainable voluntarily; and

(iii) That such information has significant probative value. The Presiding Officer shall be guided by the procedures set forth in the Federal Rules of Civil Procedure, where practicable, and the precedents thereunder, except that no discovery shall be undertaken except upon order of the Presiding Officer or upon agreement of the parties.

(2) The Presiding Officer shall order depositions upon oral questions only upon a showing of good cause and upon a finding that:

(i) The information sought cannot be obtained by alternative methods; or

(ii) There is a substantial reason to believe that relevant and probative evidence may otherwise not be preserved for presentation by a witness at the hearing.

(3) Any party to the proceeding desiring an order of discovery shall make a motion or motions therefor. Such a motion shall set forth:

(i) The circumstances warranting the taking of the discovery;

(ii) The nature of the information expected to be discovered; and

(iii) The proposed time and place where it will be taken.

If the Presiding Officer determines the motion should be granted, he shall issue an order for the taking of such discovery together with the conditions and terms thereof.

(4) Failure to comply with an order issued pursuant to this paragraph may lead to the inference that the information to be discovered would be adverse to the person or party from whom the information was sought.

(n) *Protective orders, in camera proceedings.* (1) Upon motion by a party or by the person from whom discovery is sought, and upon a showing by the movant that the disclosure of the information to be discovered, or a particular part thereof, (other than emission data) would result in methods or processes entitled to protection as trade secrets of such person being divulged, the Presiding Officer may enter a protective order with respect to such

material. Any protective order shall contain such terms governing the treatment of the information as may be appropriate under the circumstances to prevent disclosure outside the hearing: *Provided*, That the order shall state that the material shall be filed separately from other evidence and exhibits in the hearing. Disclosure shall be limited to parties to the hearing, their counsel and relevant technical consultants, and authorized representatives of the United States concerned with carrying out the Act. Except in the case of the government, disclosure may be limited to counsel for parties who shall not disclose such information to the parties themselves. Except in the case of the government, disclosure to a party or his counsel shall be conditioned on execution of a sworn statement that no disclosure of the information will be made to persons not entitled to receive it under the terms of the protective order. (No such provision is necessary where government employees are concerned because disclosure by them is subject to the terms of 18 U.S.C. 1905.)

(2)(i) A party or person seeking a protective order may be permitted to make all or part of the required showing in camera. A record shall be made of such in camera proceedings. If the Presiding Officer enters a protective order following a showing in camera, the record of such showing shall be sealed and preserved and made available to the agency or court in the event of appeal.

(ii) Attendance at any in camera proceeding may be limited to the Presiding Officer, the agency, and the person or party seeking the protective order.

(3) Any party, subject to the terms and conditions of any protective order issued pursuant to paragraph (n)(1) of this section, desiring for the presentation of his case to make use of any in camera documents or testimony shall make application to the Presiding Officer by motion setting forth the justification therefor. The Presiding Officer, in granting any such motion, shall enter an order protecting the rights of the affected persons and parties and preventing unnecessary disclosure of such information, including the presentation of such information and oral testimony and cross-examination concerning it in executive session, as in his discretion is necessary and practicable.

(4) In the submittal of proposed findings, briefs, or other papers, counsel for all parties shall make a good faith attempt to refrain from disclosing the specific details of in camera documents and testimony. This shall not preclude references in such proposed findings, briefs, or other papers to such documents or testimony including generalized statements based on their contents. To the extent that counsel considers it necessary to include specific details in their presentations, such data shall be incorporated in separate proposed findings, briefs, or other papers marked ''confidential,'' which shall become part of the in camera record.

(o) *Motions.* (1) All motions, except those made orally during the course of the hearing, shall be in writing and shall state with particularity the grounds therefore, shall set forth the relief or order sought, and shall be filed with the Hearing Clerk and served upon all parties.

(2) Within such time as may be fixed by the Environmental Appeals Board or the Presiding Officer, as appropriate, any party may serve and file an answer to the motion. The movant shall, if requested by the Environmental Appeals Board or the Presiding Officer, as appropriate, serve and file reply papers within the time set by the request.

(3) The Presiding Officer shall rule upon all motions filed or made prior to the filing of his decision or accelerated decision, as appropriate. The Environmental Appeals Board shall rule upon all motions filed prior to the appointment of a Presiding Officer and all motions filed after the filing of the decision of the Presiding Officer or accelerated decision. Oral argument of motions will be permitted only if the Presiding Officer or the Environmental Appeals Board, as appropriate, deems it necessary.

(p) *Evidence.* (1) The official transcripts and exhibits, together with all papers and requests filed in the proceeding, shall constitute the record. Immaterial or irrelevant parts of an

admissible document shall be segregated and excluded so far as practicable. Documents or parts thereof subject to a protective order under paragraph (n) of this section shall be segregated. Evidence may be received at the hearing even though inadmissible under the rules of evidence applicable to judicial proceedings. The weight to be given evidence shall be determined by its reliability and probative value.

(2) The Presiding Officer shall allow the parties to examine and cross-examine a witness to the extent that such examination and cross-examination is necessary for a full and true disclosure of the facts.

(3) Rulings of the Presiding Officer on the admissibility of evidence, the propriety of examination and cross-examination and other procedural matters shall appear in the record.

(4) Parties shall automatically be presumed to have taken exception to an adverse ruling.

(q) *Record.* (1) Hearings shall be stenographically reported and transcribed and the original transcripts shall be part of the record and the sole official transcript. Copies of the record shall be filed with the Hearing Clerk and made available during Agency business hours for public inspection. Any person desiring a copy of the record of the hearing or any part thereof, except as provided in paragraph (n) of this section, shall be entitled to the same upon payment of the cost thereof.

(2) The official transcripts and exhibits, together with all papers and requests filed in the proceeding, shall constitute the record.

(r) *Proposed findings, conclusions.* (1) Within 4 days of the close of the reception of evidence, or within such longer time as may be fixed by the Presiding Officer, any party may submit for the consideration of the Presiding Officer proposed findings of fact, conclusions of law, and a proposed order, together with reasons therefor and briefs in support thereof. Such proposals shall be in writing, shall be served upon all parties, and shall contain adequate references to the record and authorities relied upon.

(2) The record shall show the Presiding Officer's ruling on the proposed findings and conclusions except when his order disposing of the proceeding otherwise informs the parties of the action taken by him thereon.

(s) *Decision of the Presiding Officer.* (1) Unless extended by the Environmental Appeals Board, the Presiding Officer shall issue and file with the Hearing Clerk his decision within 14 days (or within 7 days in the case of a hearing requested under § 86.612(i)) after the period for filing proposed findings as provided for in paragraph (r) of this section has expired.

(2) The Presiding Officer's decision shall become the decision of the Environmental Appeals Board (i) when no notice of intention to appeal as described in paragraphs (t) and (u) of this section is filed, 10 days after issuance thereof, unless in the interim the Environmental Appeals Board shall have taken action to review or stay the effective date of the decision; or (ii), when a notice of intention to appeal is filed but the appeal is not perfected as required by paragraphs (t) or (u) of this section, 5 days after the period allowed for perfection of an appeal has expired unless within that 5 day period, the Environmental Appeals Board shall have taken action to review or stay the effective date of the decision.

(3) The Presiding Officer's decision shall include a statement of findings and conclusions, as well as the reasons or basis therefore, upon all the material issues of fact or law presented on the record and an appropriate rule or order. Such decision shall be supported by substantial evidence and based upon a consideration of the whole record.

(4) At any time prior to the issuance of his decision, the Presiding Officer may reopen the proceeding for the reception of further evidence. Except for the correction of clerical errors, the jurisdication of the Presiding Officer is terminated upon the issuance of his decision.

(t) *Appeal from the decision of the Presiding Officer.* (1) Any party to a proceeding may appeal the Presiding Officer's decision to the Environmental Appeals Board, *Provided,* That within 10

days after issuance of the Presiding Officer's decision such party files a notice of intention to appeal and an appeal brief within 20 days of such decision.

(2) When an appeal is taken from the decision of the Presiding Officer, any party may file a brief with respect to such appeal. The brief shall be filed within 15 days of the date of the filing of the appellant's brief.

(3) Any brief filed pursuant to this paragraph shall contain in the order indicated, the following:

(i) A subject index of the matter in the brief, with page references, and a table of cases (alphabetically arranged) textbooks, statutes, and other material cited, with page references thereto;

(ii) A specification of the issues intended to be urged: *Provided, however,* That in the case of a hearing requested under § 86.612(i), the brief shall be restricted to the issues specified in paragraph (c)(2)(ii) of this section;

(iii) The argument presenting clearly the points of fact and law relied upon in support of the position taken on each issue, with specific page references to the record and the legal or other material relied upon; and

(iv) A proposed order for the Environmental Appeals Board's consideration if different from the order contained in the Presiding Officer's decision.

(4) No brief in excess of 40 pages shall be filed without leave of the Environmental Appeals Board.

(5) Oral argument shall be allowed only in the discretion of the Environmental Appeals Board.

(u) *Summary appeal.* (1) In the case of a hearing requested under § 86.612(i), any appeal taken from the decision of the Presiding Officer shall be conducted under this paragraph.

(2) Any party to the proceeding may appeal the Presiding Officer's decision to the Environmental Appeals Board by filing a notice of appeal within 10 days.

(3) The notice appeal shall be in the form of a brief, and shall conform to the requirements of paragraph (t)(3) of this section.

(4) Within 10 days after a notice of appeal from the decision of the Presiding Officer is filed under this paragraph, any party may file a brief with respect to such appeal.

(5) No brief in excess of 15 pages shall be filed without leave of the Environmental Appeals Board.

(v) *Review of the Presiding Officer's decision in absence of appeal.* (1) If after the expiration of the period for taking an appeal as provided for by paragraph (t) or (u) of this section no notice of intention to appeal the decision of the Presiding Officer has been filed, or if filed, not perfected, the Hearing Clerk shall so notify the Environmental Appeals Board.

(2) The Environmental Appeals Board, upon receipt of notice from the Hearing Clerk that no notice of intention to appeal the decision of the Presiding Officer has been filed, or if filed, not perfected pursuant to paragraph (t) or (u) of this section, may, on its own motion, within the time limits specified in paragraph (s)(2) of this section, review the decision of the Presiding Officer. Notice of the intention of the Environmental Appeals Board to review the decision of the Presiding Officer shall be given to all parties and shall set forth the scope of such review and the issues which shall be considered and shall make provision for filing of briefs.

(w) *Decision of appeal or review.* (1) Upon appeal from or review of the Presiding Officer's decision, the Environmental Appeals Board shall consider such parts of the record as are cited or as may be necessary to resolve the issues presented and in addition shall, to the extent necessary or desirable, exercise all the powers which it could have exercised if it had presided at the hearing.

(2) In rendering its decision, the Environmental Appeals Board shall adopt, modify or set aside the findings, conclusions, and order contained in the decision of the Presiding Officer and shall set forth in its decision a statement of the reasons or bases for its action.

(3) In those cases where the Environmental Appeals Board determines that it should further information or additional views of the parties as to the form and content of the rule or order to be issued, the Environmental Appeals Board, in its discretion, may

withhold final action pending the receipt of such additional information or views, or may remand the case to the Presiding Officer.

(4) Any decision rendered under this paragraph which completes disposition of a case shall be a final decision of the Environmental Appeals Board.

(x) *Reconsideration.* Within twenty (20) days after issuance of the Environmental Appeals Board's decision, any party may file with the Environmental Appeals Board a petition for reconsideration of such decision, setting forth the relief desired and the grounds in support thereof. Any petition filed under this subsection must be confined to new questions raised by the decision or final order and upon which the petitioner had no opportunity to argue before the Presiding Officer or the Environmental Appeals Board; *Provided, however,* That in the case of a hearing requested under § 86.612(i) such new questions shall be limited to the issues specified in paragraph (c)(2)(ii) of this section. Any party desiring to oppose such a petition shall file an answer thereto within ten (10) days after the filing of the petition. The filing of a petition for reconsideration shall not operate to stay the effective date of the decision or order or to toll the running of any statutory time period affecting such decision or order unless specifically so ordered by the Environmental Appeals Board.

(y) *Accelerated decision, dismissal.* (1) The Presiding Officer, upon motion of any party or sua sponte, may at any time render an accelerated decision in favor of the Agency or the manufacturer as to all or any part of the proceeding, without further hearing or upon such limited additional evidence such as affidavits as he may require, or dismiss any party with prejudice, for any of the following reasons:

(i) Failure to state a claim upon which relief can be granted, or direct or collateral estoppel;

(ii) The lack of any genuine issue of material fact, causing a party to be entitled to judgment as a matter of law; or

(iii) Such other and further reasons as are just, including specifically failure to obey a procedural order of the Presiding Officer.

(2) If under this paragraph an accelerated decision is issued as to all the issues and claims joined in the proceeding, the decision shall be treated for the purposes of these procedures as the decision of the Presiding Officer as provided in paragraph (s) of this section.

(3) If under this paragraph, judgment is rendered on less than all issues or claims in the proceeding, the Presiding Officer shall determine what material facts exist without substantial controversy and what material facts are actually and in good faith controverted. He shall thereupon issue an order specifying the facts which appear without substantial controversy, and the issues and claims upon which the hearing will proceed.

(z) *Conclusion of hearing.* (1) If, after the expiration of the period for taking an appeal as provided for by paragraph (t) and (u) of this section, no appeal has been taken from the Presiding Officer's decision, and after the expiration of the period for review by the Environmental Appeals Board on its own motion as provided for by paragraph (v) of this section, the Environmental Appeals Board does not move to review such decision, the hearing will be deemed to have ended at the expiration of all periods allowed for such appeal and review.

(2) If an appeal of the Presiding Officer's decision is taken pursuant to paragraphs (t) and (u) of this section, or if, in the absence of such appeal, the Environmental Appeals Board moves to review the decision of the Presiding Officer pursuant to paragraph (v) of this section, the hearing will be deemed to have ended upon rendering of a final decision by the Environmental Appeals Board.

(aa) *Judicial review.* (1) The Administrator hereby designates the General Counsel, Environmental Protection Agency as the officer upon whom copy of any petition for judicial review shall be served. Such officer shall be responsible for filing in the court the record on which the order of the Environmental Appeals Board is based.

(2) Before forwarding the record to the court, the Agency shall advise the petitioner of costs of preparing it and as soon as payment to cover fees is

made, shall forward the record to the court.

[41 FR 31483, July 28, 1976, as amended at 43 FR 4553, Feb. 2, 1978; 44 FR 61962, Oct. 29, 1979. Redesignated and amended at 49 FR 48484, Dec. 12, 1984, and further redesignated at 54 FR 2123, Jan. 19, 1989; 57 FR 5330, Feb. 13, 1992]

§ 86.615–84 Treatment of confidential information.

(a) Any manufacturer may assert that some or all of the information submitted pursuant to this subpart is entitled to confidential treatment as provided by 40 CFR part 2, subpart B.

(b) Any claim of confidentiality must accompany the information at the time it is submitted to EPA.

(c) To assert that information submitted pursuant to this subpart is confidential, a manufacturer must indicate clearly the items of information claimed confidential by marking, circling, bracketing, stamping, or otherwise specifying the confidential information. Furthermore, EPA requests, but does not require, that the submitter also provide a second copy of its submittal from which all confidential information has been deleted. If a need arises to publicly release nonconfidential information, EPA will assume that the submitter has accurately deleted the confidential information from this second copy.

(d) If a claim is made that some or all of the information submitted pursuant to this subpart is entitled to confidential treatment, the information covered by that confidentiality claim will be disclosed by the Environmental Appeals Board only to the extent and by means of the procedures set forth in part 2, subpart B, of this chapter.

(e) Information provided without a claim of confidentiality at the time of submission may be made available to the public by EPA without further notice to the submitter, in accordance with 40 CFR 2.204(c)(2)(i)(A).

[50 FR 34798, Aug. 27, 1985. Redesignated at 54 FR 2123, Jan. 19, 1989, and amended at 57 FR 5332, Feb. 13, 1992]

Subpart H—General Provisions for In-Use Emission Regulations for 1994 and Later Model Year Light-Duty Vehicles and Light-Duty Trucks

SOURCE: 56 FR 25781, June 5, 1991, unless otherwise noted.

§ 86.701–94 General applicability.

The provisions of this subpart apply to: 1994 and later model year Otto-cycle and diesel light-duty vehicles; 1994 and later model year Otto-cycle and diesel light-duty trucks; and 1994 and later model year Otto-cycle and diesel heavy-duty engines. The provisions of subpart B of this part apply to this subpart for compliance with emissions subject to FTP standards. For cold CO standards, the provisions of subpart C of this part apply to this subpart.

[57 FR 31922, July 17, 1992]

§ 86.702–94 Definitions.

The definitions in subparts A and B of this part apply to this subpart.

§ 86.703–94 Abbreviations.

The abbreviations in subparts A and B of this part apply to this subpart.

§ 86.704–94 Section numbering; construction.

Section § 86.104 of subpart B applies to this subpart.

§§ 86.705–94—86.707–94 [Reserved]

§ 86.708–94 In-use emission standards for 1994 and later model year light-duty vehicles.

Section 86.708–94 includes text that specifies requirements that differ from § 86.090–8 of subpart A of this part. Where a paragraph in § 86.090–8 is identical and applicable to § 86.708–94, this may be indicated by specifying the corresponding paragraph and the statement ''[Reserved]. For guidance see § 86.090–8.'' Where a corresponding paragraph of § 86.090–8 is not applicable, this is indicated by the statement ''[Reserved].''

(a)(1) *Standards.* (i) In-use exhaust emissions from 1994 and later model

year light-duty vehicles shall meet all standards in tables H94–3 and H94–4 in the rows designated with the applicable fuel type, according to the implementation schedules in tables H94–1 and H94–2, and shall meet all standards in tables H94–6 and H94–7 in the rows designated with the applicable fuel type, according to the implementation schedules in table H94–5, as follows:

(A)(*1*)(*i*) For model years 1994 and 1995, a minimum of the percentage shown in table H94–1 of a manufacturer's sales of the applicable model year's light-duty vehicles shall not exceed the applicable Tier 1_I standards in table H94–3. The remaining vehicles, if any, shall not exceed the applicable Tier 0 standards in table H94–3.

(*ii*) For model years 1996 and beyond, a minimum of the percentages shown in table H94–2 of a manufacturer's sales of the applicable model year's light-duty vehicles shall not exceed the applicable Tier 1 standards in tables H94–3 and H94–4. The remaining vehicles, if any, shall not exceed the applicable Tier 1_I standards in table H94–3.

(*2*) *Particulates.* For in-use exhaust emissions for model years 1994 and later, a minimum of the percentage shown in table H94–5 of a manufacturer's sales of the applicable model year's light-duty vehicles shall not exceed the applicable Tier 1 standards in tables H94–6 and H94–7. The remaining vehicles, if any, shall not exceed the applicable Tier 0 standards in table H94–6.

(*3*) Optionally, compliance with the Tier 1_I and Tier 1 implementation schedules of this section may be based on the combined sales of light-duty vehicles and light light-duty trucks, if such option was taken for certification as allowed in § 86.094–8 and § 86.094–9 of subpart A of this part. Vehicles meeting Tier 1_I in-use standards shall only be combined for this purpose with other vehicles meeting Tier 1_I standards, and those meeting Tier 1 standards shall only be combined with those meeting the Tier 1 standards.

TABLE H94–1—IMPLEMENTATION SCHEDULE FOR LIGHT-DUTY VEHICLES FOR HCS, CO AND NO_X

Model year	Tier 1_I percentage
1994	40
1995	80
1996	60
1997	20
After 1997	0

TABLE H94–2—IMPLEMENTATION SCHEDULE FOR LIGHT-DUTY VEHICLES FOR HCS, CO AND NO_X

Model year	Tier 1 percentage
1994	0
1995	0
1996	40
1997	80
After 1997	100

TABLE H94–3—INTERMEDIATE USEFUL LIFE[1] STANDARDS (G/MI) FOR LIGHT-DUTY VEHICLES FOR HCS, CO AND NO_X

Fuel	Standards	THC	NMHC	THCE	NMHCE	CO	NO_X
Gasoline	Tier 0	0.41	.....	.....	.....	3.4	1.0
Gasoline	Tier 1_I	0.41	0.32	.....	.....	3.4	0.4
Gasoline	Tier 1	0.41	0.25	.....	.....	3.4	0.4
Diesel	Tier 0	0.41	.....	.....	.....	3.4	1.0
Diesel	Tier 1_I	0.41	0.32	.....	.....	3.4	1.0
Diesel	Tier 1	0.41	0.25	.....	.....	3.4	1.0
Methanol	Tier 0	.....	.....	0.41	.....	3.4	1.0
Methanol	Tier 1_I	.....	.....	0.41	0.32	3.4	0.4
Methanol	Tier 1	.....	.....	0.41	0.25	3.4	0.4
Natural Gas	Tier 0	.....	0.34	.....	.....	3.4	1.0
Natural Gas	Tier 1_I	.....	0.32	.....	.....	3.4	0.4
Natural Gas	Tier 1	.....	0.25	.....	.....	3.4	0.4
LPG	Tier 0	0.41	.....	.....	.....	3.4	1.0

TABLE H94–3—INTERMEDIATE USEFUL LIFE[1] STANDARDS (G/MI) FOR LIGHT-DUTY VEHICLES FOR HCS, CO AND NO_X—Continued

Fuel	Standards	THC	NMHC	THCE	NMHCE	CO	NO_X
LPG	Tier 1_I	0.41	0.32	.....	.....	3.4	0.4
LPG	Tier 1	0.41	0.25	.....	.....	3.4	0.4

[1] The applicable useful life is 5 years or 50,000 miles, whichever first occurs.

TABLE H94–4—FULL USEFUL LIFE[1] STANDARDS (G/MI) FOR LIGHT-DUTY VEHICLES FOR HCS, CO AND NO_X

Fuel	Standards	THC	NMHC	THCE	NMHCE	CO	NO_X
Gasoline	Tier 0	.....	.....	.....	.....	.....	.....
Gasoline	Tier 1	.....	0.31	.....	.....	4.2	0.60
Diesel	Tier 0	.....	.....	.....	.....	.....	.....
Diesel	Tier 1	.....	0.31	.....	.....	4.2	1.25
Methanol	Tier 0	.....	.....	.....	.....	.....	.....
Methanol	Tier 1	.....	.....	.....	0.31	4.2	0.60
Natural Gas	Tier 0	.....	.....	.....	.....	.....	.....
Natural Gas	Tier 1	.....	0.31	.....	.....	4.2	0.60
LPG	Tier 0	.....	.....	.....	.....	.....	.....
LPG	Tier 1	.....	0.31	.....	.....	4.2	0.60

[1] The applicable useful life is 10 years or 100,000 miles, whichever first occurs, except that no enforcement testing will be done beyond 7 years or 75,000 miles, whichever first occurs.

TABLE H94–5—IMPLEMENTATION SCHEDULE FOR LIGHT-DUTY VEHICLES FOR PM

Model year	Tier 1 percentage
1994	40
1995	80
After 1995	100

TABLE H94–6—INTERMEDIATE USEFUL LIFE[1] STANDARDS (G/MI) FOR LIGHT-DUTY VEHICLES FOR PM

Fuel	Standards	PM
Gasoline	Tier 0	.....
Gasoline	Tier 1	0.08
Diesel	Tier 0	0.20
Diesel	Tier 1	0.08
Methanol	Tier 0	[2] 0.20
Methanol	Tier 1	10.08
Natural Gas	Tier 0	[2] 0.20
Natural Gas	Tier 1	0.08
LPG	Tier 0	[2] 0.20
LPG	Tier 1	0.08

[1] The applicable useful life is 5 years or 50,000 miles, whichever first occurs.
[2] Applicable only to diesel-cycle vehicles.

TABLE H94–7—FULL USEFUL LIFE[1] STANDARDS (G/MI) FOR LIGHT-DUTY VEHICLES FOR PM

Fuel	Standards	PM
Gasoline	Tier 0	.....
Gasoline	Tier 1	0.10
Diesel	Tier 0	.....
Diesel	Tier 1	0.10
Methanol	Tier 0	.....
Methanol	Tier 1	0.10
Natural Gas	Tier 0	.....
Natural Gas	Tier 1	0.10
LPG	Tier 0	.....
LPG	Tier 1	0.10

[1] The applicable useful life is 10 years or 100,000 miles, whichever first occurs, except that no enforcement testing will be done beyond 7 years or 75,000 miles, whichever first occurs.

(B)(*1*)(*i*) Sales percentages for the purposes of determining compliance with paragraph (a)(1)(i) of this section shall be based on total actual U.S. sales of light-duty vehicles of the applicable model year by a manufacturer to a dealer, distributor, fleet operator, broker, or any other entity which comprises the point of first sale. If the option of paragraph (a)(1)(i)(A)(*3*) is taken, such sales percentages shall be based on the total actual combined U.S. sales of light-duty vehicles and light light-duty trucks of the applicable model year by a manufacturer to a dealer, distributor, fleet operator, broker, or any other entity which comprises the point of first sale.

(*ii*) The manufacturer may petition the Administrator to allow actual volume produced for U.S. sales to be used in lieu of actual U.S. sales for purposes of determining compliance with the implementation schedule sales percentages of tables H94–1, H94–2 and H94–5 of this section. Such petition shall be submitted within 30 days of the end of the model year to the Manufacturers Operations Division. For the petition to be granted, the manufacturer must establish to the satisfaction of the Administrator that actual production volume is functionally equivalent to actual sales volume.

(*iii*) The vehicles that are counted toward the implementation schedule sales percentage, or toward the total on which such percentage is based, for certification purposes as prescribed by § 86.094–8 (a)(1)(i)(B)(*1*)(*iii*) of subpart A of this part, shall be the same vehicles that are counted toward the implementation schedule sales percentage, or the total on which it is based, for in-use purposes.

(*iv*) Small volume manufacturers, as defined in § 86.092–14 (b) (1) and (2), are exempt from the implementation schedules of tables H94–1 and H94–2 of this section for model years 1994 through 1997, and from the implementation schedule of table H94–5 of this section for model years 1994 and 1995. For small volume manufacturers, Tier 0 standards of table H94–6 continue to apply until model year 1996 and Tier 0 standards of table H94–3 continue to apply until model year 1998, when one hundred percent compliance with the Tier 1 standards of tables H94–3, H94–4, H94–6, and H94–7 is required. This exemption does not apply to small volume engine families as defined in § 86.092–14 (b)(5).

(*2*)(*i*) For 1994 and 1995 model year light-duty vehicles, the engine families which comprise the required implementation schedule percentage of sales meeting Tier 1 standards for HCs, CO, and NO_X, for purposes of certification, shall be the same engine families which comprise the required implementation schedule percentage of sales meeting the interim in-use standards (labeled ''Tier 1_I'' in the tables of in-use standards) for in-use purposes.

(*ii*) For 1996 and 1997 model year light-duty vehicles the engine families which comprise the required implementation schedule percentage of sales meeting interim in-use standards (labeled ''Tier 1_I'' in the tables of in-use standards) and final in-use standards (labeled ''Tier 1'' in the tables of in-use standards) respectively, for HCs, CO, and NO_X, for in-use purposes, shall be designated by the manufacturer at the time of Application for Certification.

(*iii*) For 1994 and 1995 model year light-duty vehicles, the engine families which comprise the required implementation schedule percentage of sales meeting Tier 1 standards, for PM, for purposes of certification, shall be the same engine families which comprise the required implementation schedule percentage of sales meeting the final in-use standards (labeled ''Tier 1'' in the tables of in-use standards) for PM for in-use purposes.

(*3*) The manufacturer must state at the time of Application for Certification, based on projected U.S. sales or projected production for U.S. sale, which families will be used to attain the required implementation schedule sales percentages for in-use purposes.

(*4*) A manufacturer cannot use one set of engine families to meet its in-use intermediate useful life standards and another to meet its in-use full useful life standards. The same families which are used to meet the intermediate useful life standards will be required without deviation to meet the corresponding full useful life standards.

(ii) Engine families participating in the particulate averaging program as

specified in § 86.094–8 (a)(1)(ii) shall be subject, for purposes of in-use compliance, to the particulate family emission limit determined for that engine family for certification purposes, in lieu of the appropriate particulate standard shown in the tables of in-use standards in this section.

(iii) CST emissions from model year 1996 and later gasoline-fueled Otto-cycle light-duty vehicles measured and calculated in accordance with subpart O of this part may not exceed the standards listed in paragraphs (a)(1)(iii) (A) and (B) of this section.

(A) Hydrocarbons: 220 ppm as hexane.

(B) Carbon monoxide: 1.2 percent.

(2) The standards set forth in paragraph (a)(1)(i) of this section refer to the exhaust emitted over a driving schedule as set forth in subpart B of this part and measured and calculated in accordance with those procedures. The test weight basis for light-duty vehicles, for the purposes of determining equivalent test weight as prescribed in § 86.129–94, shall be loaded vehicle weight.

(3) The standards set forth in paragraph (a)(1)(iii) of this section refer to the exhaust emitted during the CST as set forth in subpart O of this part and measured and calculated in accordance with those provisions.

(b) The provisions of § 86.090–8(b) through (h) of subpart A of this part apply to this section. The provisions of § 86.096–8(i) through (k) of subpart A of this part apply to this section.

[56 FR 25781, June 5, 1991, as amended at 57 FR 31922, July 17, 1992; 58 FR 33211, June 16, 1993; 58 FR 58424, Nov. 1, 1993; 59 FR 33913, July 1, 1994; 59 FR 48515, Sept. 21, 1994]

§ 86.708–98 In-use emission standards for 1998 and later model year light-duty vehicles.

Section 86.708–98 includes text that specifies requirements that differ from § 86.090–8 of subpart A of this part. Where a paragraph in § 86.090–8 is identical and applicable to § 86.708–98, this may be indicated by specifying the corresponding paragraph and the statement ''[Reserved]. For guidance see § 86.090–8.'' Where a corresponding paragraph of § 86.090–8 is not applicable, this is indicated by the statement ''[Reserved].''

(a)(1)(i) In-use exhaust emissions from 1998 and later model year light-duty vehicles shall meet all standards in tables H98–1 and H98–2 in the rows designated with the applicable fuel type.

TABLE H98–1—INTERMEDIATE USEFUL LIFE [1] STANDARDS (G/MI) FOR LIGHT-DUTY VEHICLES

Fuel	THC	NMHC	THCE	NMHCE	CO	NO_X	PM
Gasoline	0.41	0.25	.....	.....	3.4	0.4	0.08
Diesel	0.41	0.25	.....	.....	3.4	1.0	0.08
Methanol	.....	.....	0.41	0.25	3.4	0.4	0.08
Natural Gas	.....	0.25	.....	.....	3.4	0.4	0.08
LPG	0.41	0.25	.....	.....	3.4	0.4	0.08

[1] The applicable useful life is 5 years or 50,000 miles, whichever first occurs.

TABLE H98–2—FULL USEFUL LIFE [1] STANDARDS (G/MI) FOR LIGHT-DUTY VEHICLES

Fuel	THC	NMHC	THCE	NMHCE	CO	NO_X	PM
Gasoline	.....	0.31	.....	.....	4.2	0.6	0.10
Diesel	.....	0.31	.....	.....	4.2	1.25	0.10
Methanol	.....	.....	.....	0.31	4.2	0.6	0.10
Natural Gas	.....	0.31	.....	.....	4.2	0.6	0.10
LPG	.....	0.31	.....	.....	4.2	0.6	0.10

[1] The applicable useful life is 10 years or 100,000 miles, whichever first occurs, except that no enforcement testing will be done beyond 7 years or 75,000 miles, whichever first occurs.

(ii)(A) Vehicles subject to the standards of paragraph (a)(1)(i) of this section shall be all actual U.S. sales of light-duty vehicles of the applicable model year by a manufacturer.

(B) A manufacturer cannot use one set of engine families to meet its in-use intermediate useful life standards and another to meet its in-use full useful life standards. The same families which

are used to meet the intermediate useful life standards will be required without deviation to meet the corresponding full useful life standards.

(iii) CST emissions from gasoline-fueled Otto-cycle light-duty vehicles measured and calculated in accordance with subpart O of this part may not exceed the standards listed in paragraphs (a)(1)(iii) (A) and (B) of this section.

(A) Hydrocarbons: 220 ppm as hexane.

(B) Carbon monoxide: 1.2 percent.

(2) The standards set forth in paragraph (a)(1) of this section refer to the exhaust emitted over a driving schedule as set forth in subpart B of this part and measured and calculated in accordance with those procedures. The test weight basis for light-duty vehicles, for the purposes of determining equivalent test weight as prescribed in §86.129–94, shall be loaded vehicle weight.

(3) The standards set forth in paragraph (a)(1)(iii) of this section refer to the exhaust emitted during the CST as set forth in subpart O of this part and measured and calculated in accordance with those provisions.

(b) The provisions of §86.090–8 (b) through (h) of subpart A of this part apply to this section. The provisions of §86.096–8 (i) through (j) of subpart A of this part apply to this section.

[56 FR 25781, June 5, 1991, as amended at 58 FR 58424, Nov. 1, 1993; 59 FR 33913, July 1, 1994; 59 FR 48516, Sept. 21, 1994]

§86.709–94 In-use emission standards for 1994 and later model year light-duty trucks.

Section 86.709–94 includes text that specifies requirements that differ from §86.091–9 of subpart A of this part. Where a paragraph in §86.091–9 is identical and applicable to §86.709–94, this may be indicated by specifying the corresponding paragraph and the statement ''[Reserved]. For guidance see §86.091–9.'' Where a corresponding paragraph of §86.091–9 is not applicable, this is indicated by the statement ''[Reserved].''

(a)(1) *Standards*—(i) *Light light-duty trucks.* In-use exhaust emissions from 1994 and later model year light light-duty trucks shall meet all standards in tables H94–9 and H94–10 in the rows designated with the applicable fuel type and loaded vehicle weight, according to the implementation schedule in table H94–8, and shall meet all standards in tables H94–12 and H94–13 in the rows designated with the applicable fuel type and loaded vehicle weight, according to the implementation schedules in table H94–11, as follows:

(A)(*1*)(*i*) For model year 1994 and 1995, a minimum of the respective percentages shown in the Tier 1_I column of table H94–8 of a manufacturer's sales of the applicable model year's light light-duty trucks shall not exceed the applicable Tier 1_I standards in tables H94–9 and H94–10. The remaining vehicles, if any, shall not exceed the applicable Tier 0 standards in tables H94–9 and H94–10.

(*ii*) For model years 1996 and 1997, a minimum of the percentages shown in the Tier 1 percentage column of table H94–8 of a manufacturer's sales of the applicable model year's light light-duty trucks shall not exceed the applicable Tier 1 standards in table H94–9 and H94–10, and the remaining vehicles, if any, shall not exceed the applicable Tier 1_I standards in tables H94–9 and H94–10.

(*iii*) For model year 1998 and beyond, a minimum of the percentage shown in the Tier 1 percentage column of table H94–8 of a manufacturer's sales of the applicable model year's light light-duty trucks shall not exceed the applicable Tier 1 standards in tables H94–9 and H94–10.

(*2*) *Particulates.* For in-use exhaust emissions for 1994 and later, a minimum of the percentage shown in table H94–11 of a manufacturer's sales of the applicable model year's light light-duty trucks shall not exceed the applicable Tier 1 standards in tables H94–12 and H94–13. The remaining light light-duty trucks, if any, shall not exceed the applicable Tier 0 standards in tables H94–12 and H94–13.

(*3*) Optionally, compliance with the Tier 1_I and Tier 1 implementation schedules of this section may be based on the combined sales of light-duty vehicles and light light-duty trucks, if such option was taken for certification as allowed in §86.094–8 and §86.094–9 of subpart A of this part. Vehicles meeting Tier 1_I in-use standards shall only be combined for this purpose with

other vehicles meeting Tier 1_I standards, and those meeting Tier 1 standards shall only be combined with those meeting the Tier 1 standards.

TABLE H94–8—IMPLEMENTATION SCHEDULE FOR LIGHT LIGHT-DUTY TRUCKS FOR HCS, CO AND NO_X

Model year	Tier 1_I percentage	Tier 1 percentage
1994	40	0
1995	80	0
1996	60	40
1997	20	80
1998	0	100

TABLE H94–9—INTERMEDIATE USEFUL LIFE [1] STANDARDS (G/MI) FOR LIGHT LIGHT-DUTY TRUCKS FOR HCS, CO AND NO_X

Fuel	LVW (lbs)	Standards	THC	NMHC	THCE	NMHCE	CO	NO_X
Gasoline	0–3750	Tier 0	0.80				10	1.2
Gasoline	0–3750	Tier 1	0.80	0.32			5.2	0.4
Gasoline	0–3750	Tier 1	0.80	0.25			3.4	0.4
Gasoline	3751–5750	Tier 0	0.80				10	1.7
Gasoline	3751–5750	Tier 1_I	0.80	0.41			6.7	0.7
Gasoline	3751–5750	Tier 1	0.80	0.32			4.4	0.7
Diesel	0–3750	Tier 0	0.80				10	1.2
Diesel	0–3750	Tier 1_I	0.80	0.32			5.2	1.2
Diesel	0–3750	Tier 1	0.80	0.25			3.4	1.0
Diesel	3751–5750	Tier 0	0.80				10	1.7
Diesel	3751–5750	Tier 1_I	0.80	0.41			6.7	1.7
Diesel	3751–5750	Tier 1	0.80	0.32			4.4	0.97
Methanol	0–3750	Tier 0			0.80		10	1.2
Methanol	0–3750	Tier 1_I			0.80	0.32	5.2	0.4
Methanol	0–3750	Tier 1			0.80	0.25	3.4	0.4
Methanol	3751–5750	Tier 0			0.80		10	1.7
Methanol	3751–5750	Tier 1_I			0.80	0.41	6.7	0.7
Methanol	3751–5750	Tier 1			0.80	0.32	4.4	0.7
Natural Gas	0–3750	Tier 0		0.67			10	1.2
Natural Gas	0–3750	Tier 1_I		0.32			5.2	0.4
Natural Gas	0–3750	Tier 1		0.25			3.4	0.4
Natural Gas	3751–5750	Tier 0		0.67			10	1.7
Natural Gas	3751–5750	Tier 1_I		0.41			6.7	0.7
Natural Gas	3751–5750	Tier 1		0.32			4.4	0.7
LPG	0–3750	Tier 0	0.80			10	1.2	
LPG	0–3750	Tier 1_I	0.80	0.32			5.2	0.4
LPG	0–3750	Tier 1	0.80	0.25			3.4	0.4
LPG	3751–5750	Tier 0	0.80			10	1.7	
LPG	3751–5750	Tier 1_I	0.80	0.41		6.7	0.7	
LPG	3751–5750	Tier 1	0.80	0.32			4.4	0.7

[1] The applicable useful life is 5 years or 50,000 miles, whichever first occurs.

TABLE H94–10—FULL USEFUL LIFE STANDARDS (G/MI) FOR LIGHT LIGHT-DUTY TRUCKS FOR HCS, CO AND NO_X

Fuel	LVW (lbs)	Standards	THC[2]	NMHC[1]	THCE[2]	NMHCE[1]	CO[1]	NO_X[1]
Gasoline	0–3750	Tier 0	0.80				10	1.2
Gasoline	0–3750	Tier 1	0.80	0.31			4.2	0.60
Gasoline	3751–5750	Tier 0	0.80				10	1.7
Gasoline	3751–5750	Tier 1	0.80	0.40			5.5	0.97
Diesel	0–3750	Tier 0	0.80				10	1.2
Diesel	0–3750	Tier 1	0.80	0.31			4.2	1.25
Diesel	3751–5750	Tier 0	0.80				10	1.7
Diesel	3751–5750	Tier 1	0.80	0.40			5.5	0.97
Methanol	0–3750	Tier 0			0.80		10	1.2
Methanol	0–3750	Tier 1			0.80	0.31	4.2	0.60
Methanol	3751–5750	Tier 0			0.80		10	1.7
Methanol	3751–5750	Tier 1			0.80	0.40	5.5	0.97
Natural Gas	0–3750	Tier 0	2.93	0.67			10	1.2
Natural Gas	0–3750	Tier 1	2.93	0.31			4.2	0.60
Natural Gas	3751–5750	Tier 0	2.93	0.67			10	1.7
Natural Gas	3751–5750	Tier 1	2.93	0.40			5.5	0.97

TABLE H94–10—FULL USEFUL LIFE STANDARDS (G/MI) FOR LIGHT LIGHT-DUTY TRUCKS FOR HCS, CO AND NO_X—Continued

Fuel	LVW (lbs)	Standards	THC[2]	NMHC[1]	THCE[2]	NMHCE[1]	CO[1]	NO_X[1]
LPG	0–3750	Tier 0	0.80	.....	.....	.....	10	1.2
LPG	0–3750	Tier 1	0.80	0.31	.....	.....	4.2	0.60
LPG	3751–5750	Tier 0	0.80	.....	.....	.....	10	1.7
LPG	3751–5750	Tier 1	0.08	0.40	.....	.....	5.5	0.97

[1] The applicable useful life is 10 years or 100,000 miles, which ever first occurs, except that no enforcement testing will be done beyond 7 years or 75,000 miles, whichever first occurs.
[2] The applicable useful life is 11 years or 120,000 miles, whichever first occurs.

TABLE H94–11—IMPLEMENTATION SCHEDULE FOR LIGHT LIGHT-DUTY TRUCKS FOR PM

Model year	Tier 1 percentage
1994	0%
1995	40%
1996	80%
after 1996	100%

TABLE H94–12—INTERMEDIATE USEFUL LIFE [1] STANDARDS (G/MI) FOR LIGHT LIGHT-DUTY TRUCKS FOR PM

Fuel	LVW (lbs)	Standards	PM
Gasoline	0–3750	Tier 0	.....
Gasoline	0–3750	Tier 1	0.08
Gasoline	3751–5750	Tier 0	.....
Gasoline	3751–5750	Tier 1	0.08
Diesel	0–3750	Tier 0	0.26
Diesel	0–3750	Tier 1	0.08
Diesel	3751–5750	Tier 0	0.13
Diesel	3751–5750	Tier 1	0.08
Methanol	0–3750	Tier 0	.....
Methanol	0–3750	Tier 1	0.08
Methanol	3751–5750	Tier 0	.....
Methanol	3751–5750	Tier 1	0.08
Natural Gas	0–3750	Tier 0	[2] 0.26
Natural Gas	0–3750	Tier 1	0.08
Natural Gas	3751–5750	Tier 0	[2] 0.13
Natural Gas	3751–5750	Tier 1	0.08
LPG	0–3750	Tier 0	[2] 0.26
LPG	0–3750	Tier 1	0.08
LPG	3751–5750	Tier 0	[2] 0.13
LPG	3751–5750	Tier 1	0.08

[1] The applicable useful life is 5 years or 50,000 miles, whichever first occurs.
[2] Applicable only to diesel-cycle vehicles.

TABLE H94–13—FULL USEFUL LIFE [1] STANDARDS (G/MI) FOR LIGHT LIGHT-DUTY TRUCKS FOR PM

Fuel	LVW (lbs)	Standards	PM
Gasoline	0–3750	Tier 0	.....
Gasoline	0–3750	Tier 1	0.10
Gasoline	3751–5750	Tier 0	.....
Gasoline	3751–5750	Tier 1	0.10
Diesel	0–3750	Tier 0	0.26
Diesel	0–3750	Tier 1	0.10
Diesel	3751–5750	Tier 0	0.13
Diesel	3751–5750	Tier 1	0.10
Methanol	0–3750	Tier 0	.....
Methanol	0–3750	Tier 1	0.10
Methanol	3751–5750	Tier 0	.....
Methanol	3751–5750	Tier 1	0.10
Natural Gas	0–3750	Tier 0	[2] 0.26
Natural Gas	0–3750	Tier 1	0.10
Natural Gas	3751–5750	Tier 0	[2] 0.13
Natural Gas	3751–5750	Tier 1	0.10
LPG	0–3750	Tier 0	[2] 0.26
LPG	0–3750	Tier 1	0.10
LPG	3751–5750	Tier 0	[2] 0.13

TABLE H94–13—FULL USEFUL LIFE [1] STANDARDS (G/MI) FOR LIGHT LIGHT-DUTY TRUCKS FOR PM—Continued

Fuel	LVW (lbs)	Standards	PM
LPG	3751–5750	Tier 1	0.10

[1] The applicable useful life is 10 years or 100,000 miles, whichever first occurs, except that no enforcement testing will be done beyond 7 years or 75,000 miles, whichever first occurs.
[2] Applicable only to diesel-cycle vehicles.

(B)(*1*)(*i*) Sales percentages for the purposes of determining compliance with paragraph (a)(1)(i)(A) of this section shall be based on total actual U.S. sales of light-duty vehicles of the applicable model year by a manufacturer to a dealer, distributor, fleet operator, broker, or any other entity which comprises the point of first sale. If the option of paragraph (a)(1)(i)(A)(*3*) is taken, such sales percentages shall be based on the total actual combined U.S. sales of light-duty vehicles and light light-duty trucks of the applicable model year by a manufacturer to a dealer, distributor, fleet operator, broker, or any other entity which comprises the point of first sale.

(*ii*) The manufacturer may petition the Administrator to allow actual volume produced for U.S. sale to be used in lieu of actual U.S. sales for purposes of determining compliance with the implementation schedule sales percentages of tables H94–8 and H94–11 of this section. Such petition shall be submitted within 30 days of the end of the model year to the Manufacturers Operations Division. For the petition to be granted, the manufacturer must establish to the satisfaction of the Administrator that actual production volume is functionally equivalent to actual sales volume.

(*iii*) The vehicles that are counted toward the implementation schedule sales percentage, or toward the total on which such percentage is based, for certification purposes as prescribed by § 86.094–9(a)(1)(i)(B)(*1*)(*iii*) of subpart A of this part, shall be the same vehicles that are counted toward the implementation schedule sales percentage, or the total on which it is based, for in-use purposes.

(*iv*) Small volume manufacturers, as defined in § 86.092–14(b) (1) and (2), are exempt from the implementation schedules of table H94–8 of this section for model years 1994 through 1997 and from the implementation schedules of table H94–11 of this section for model years 1995 and 1996. For small volume manufacturers, Tier 0 standards of tables H94–9 and H94–10 continue to apply until model year 1998 and the Tier 0 standards of tables H94–12 and H94–13 continue to apply until model year 1997, when one hundred percent compliance with the Tier 1 standards of such tables is required. This exemption does not apply to small volume engine families as defined in § 86.092–14 (b)(5).

(*2*)(*i*) For 1994 and 1995 model year light light-duty trucks, the engine families which comprise the required implementation schedule percentage of sales meeting Tier 1 standards for HCs, CO, and NO_X, for purposes of certification, shall be the same engine families which comprise the required implementation schedule percentage of sales meeting the interim in-use standards (labeled ''Tier 1_I'' in the tables of in-use standards) for in-use purposes.

(*ii*) For 1996 and 1997 model year light light-duty trucks, the engine families which comprise the required implementation schedule percentage of sales meeting interim in-use standards (labeled ''Tier 1_I'' in the tables of in-use standards) and final in-use standards (labeled ''Tier 1'' in the tables of in-use standards) respectively, for HCs, CO, and NO_X, for in-use purposes, shall be designated by the manufacturer at the time of certification.

(*iii*) For 1995 and 1996 model year light light-duty trucks, the engine families which comprise the required implementation schedule percentage of sales meeting Tier 1 standards, for PM, for purposes of certification, shall be the same engine families which comprise the required implementation schedule percentage of sales meeting the final in-use standards (labeled ''Tier 1'' in the tables of in-use standards) for PM for in-use purposes.

(*3*) The manufacturer must state at the time of Application for Certification, based on projected U.S. sales or projected production for U.S. sale, which families will be used to attain the required implementation schedule sales percentages for in-use purposes.

(*4*) A manufacturer can not use one set of engine families to meet its in-use intermediate useful life standards and another to meet its in-use full useful life standards. The same families which are used to meet the intermediate useful life standards will be required without deviation to meet the corresponding full useful life standards.

(ii) *Heavy light-duty trucks.* In-use exhaust emissions from 1994 and later model year heavy light-duty trucks shall meet all standards in tables H94–15 and H94–16 in the rows designated with the applicable fuel type and loaded vehicle weight or adjusted loaded vehicle weight, as applicable, according to the implementation schedule in table H94–14, and shall meet all standards in tables H94–18 and H94–19 in the rows designated with the applicable fuel type and loaded vehicle weight or adjusted loaded vehicle weight, as applicable, according to the implementation schedules in table H94–17, as follows:

(A)(*1*)(*i*) For model years 1994 through 1997, a minimum of the percentage shown in the Tier 1_I column of table H94–14 of a manufacturer's sales of the applicable model year's heavy light-duty trucks shall not exceed the applicable Tier 1_I standards in tables H94–15 and H94–16. The remaining vehicles, if any, shall not exceed the applicable Tier 0 standards in tables H94–15 and H94–16.

(*ii*) For model year 1998, a minimum of the percentage shown in table H94–14 of a manufacturer's sales of the applicable model year's heavy light-duty trucks shall not exceed the applicable Tier 1 standards in tables H94–15 and H94–16. The remaining vehicles shall not exceed the applicable Tier 1_I standards in tables H94–15 and H94–16.

(*iii*) For model years 1999 and later, a minimum of the percentage shown in table H94–14 of a manufacturer's sales of the applicable model year's heavy light-duty trucks shall not exceed the applicable Tier 1 standards in tables H94–15 and H94–16.

(2) *Particulates.* For in-use exhaust emissions for model year 1994 and later, a minimum of the percentage shown in table H94–17 of a manufacturer's sales of the applicable model year's heavy light-duty trucks shall not exceed the applicable Tier 1 standards in tables H94–18 and H94–19. The remaining heavy light-duty trucks, if any, shall not exceed the applicable Tier 0 standards in tables H94–18 and H94–19.

TABLE H94–14—IMPLEMENTATION SCHEDULE FOR HEAVY LIGHT-DUTY TRUCKS FOR HCS, CO AND NO_X

Model year	Tier 1_I percentage	Tier 1 percentage
1994	0%	0%
1995	0%	0%
1996	50%	0%
1997	100%	0%
1998	50%	50%
after 1998	0%	100%

TABLE H94–15—INTERMEDIATE USEFUL LIFE [1] STANDARDS (G/MI) FOR HEAVY LIGHT-DUTY TRUCKS FOR HCS, CO AND NO_X

Fuel	LVW (lbs)	ALVW (lbs)	Standards	THC	NMHC	THCE	NMHCE	CO	NO_X
Gasoline	0–3750		Tier 0	0.80				10	1.2
Gasoline	> 3750		Tier 0	0.80				10	1.7
Gasoline		3751–5750	Tier 1_I	0.80	0.40			5.5	0.88
Gasoline		3751–5750	Tier 1	0.80	0.32			4.4	0.7
Gasoline		> 5750	Tier 1_I	0.80	0.49			6.2	1.38
Gasoline		> 5750	Tier 1	0.80	0.39			5.0	1.1
Diesel	0–3750		Tier 0	0.80				10	1.2

TABLE H94–15—INTERMEDIATE USEFUL LIFE[1] STANDARDS (G/MI) FOR HEAVY LIGHT-DUTY TRUCKS FOR HCS, CO AND NO_X—Continued

Fuel	LVW (lbs)	ALVW (lbs)	Standards	THC	NMHC	THCE	NMHCE	CO	NO_X
Diesel	> 3750		Tier 0	0.80				10	1.7
Diesel	0–3750	3751–5750	Tier 1_I	0.80	0.40			5.5	1.2
Diesel	> 3750	3751–5750	Tier 1_I	0.80	0.40			5.5	1.7
Diesel		3751–5750	Tier 1	0.80	0.32			4.4	0.98
Diesel	0–3750	> 5750	Tier 1_I	0.80	0.49			6.2	1.2
Diesel	> 3750	> 5750	Tier 1_I	0.80	0.49			6.2	1.7
Diesel		> 5750	Tier 1	0.80	0.39			5.0	1.53
Methanol	0–3750		Tier 0	0.80				10	1.2
Methanol	> 3750		Tier 0	0.80				10	1.7
Methanol		3751–5750	Tier 1_I			0.80	0.40	5.5	0.88
Methanol		3751–5750	Tier 1			0.80	0.32	4.4	0.7
Methanol		> 5750	Tier 1_I			0.80	0.49	6.2	1.38
Methanol		> 5750	Tier 1			0.80	0.39	5.0	1.1
Natural Gas	0–3570		Tier 0		0.67			10	1.2
Natural Gas	> 3750		Tier 0		0.67			10	1.7
Natural Gas		3751–5750	Tier 1_I		0.40			5.5	0.88
Natural Gas		3751–5750	Tier 1		0.32			4.4	0.7
Natural Gas		> 5750	Tier 1_I		0.49			6.2	1.38
Natural Gas		> 5750	Tier 1		0.39			5.0	1.1
LPG	0–3570		Tier 0	0.80				10	1.2
LPG	> 3750		Tier 0	0.80				10	1.7
LPG		3751–5750	Tier 1_I	0.80	0.40			5.5	0.88
LPG		3751–5750	Tier 1	0.80	0.32			4.4	0.7
LPG		> 5750	Tier 1_I	0.80	0.49			6.2	1.38
LPG		> 5750	Tier 1	0.80	0.39			5.0	1.1

[1] The applicable useful life is 5 years or 50,000 miles, whichever first occurs.

TABLE H94–16—FULL USEFUL LIFE STANDARDS (G/MI) FOR HEAVY LIGHT-DUTY TRUCKS FOR HCS, CO AND NO_X

Fuel	LVW (lbs)	ALVW (lbs)	Standards	THC[2]	NMHC[1]	THCE[2]	NMHCE[1]	CO[1]	NO_X[1]
Gasoline	0–3750		Tier 0	0.80				10	1.2
Gasoline	> 3750		Tier 0	0.80				10	1.7
Gasoline		3751–5750	Tier 1	0.80	0.46			6.4	0.98
Gasoline		> 5750	Tier 1	0.80	0.56			7.3	1.53
Diesel	0–3750		Tier 0	0.80				10	1.2
Diesel	> 3750		Tier 0	0.80				10	1.7
Diesel		3751–5750	Tier 1	0.80	0.46			6.4	0.98
Diesel		> 5750	Tier 1	0.80	0.56			7.3	1.53
Methanol	0–3750		Tier 0			0.80		10	1.2
Methanol	> 3750		Tier 0			0.80		10	1.7
Methanol		3751–5750	Tier 1			0.80	0.46	6.4	0.98
Methanol		> 5750	Tier 1			0.80	0.56	7.3	1.53
Natural Gas	0–3750		Tier 0		0.67			10	1.2
Natural Gas	> 3750		Tier 0		0.67			10	1.7
Natural Gas		3751–5750	Tier 1		0.46			6.4	0.98
Natural Gas		> 5750	Tier 1		0.56			7.3	1.53
LPG	0–3750		Tier 0	0.80				10	1.2
LPG	> 3750		Tier 0	0.80				10	1.7
LPG		3751–5750	Tier 1	0.80	0.46			6.4	0.98
LPG		> 5750	Tier 1	0.80	0.56			7.3	1.53

[1] The applicable useful life is 11 years or 120,000 miles, whichever first occurs, except that no enforcement testing will be done beyond 7 years or 90,000 miles, whichever first occurs.

[2] The applicable useful life is 11 years or 120,000 miles, whichever first occurs.

TABLE H94–17—IMPLEMENTATION SCHEDULE FOR HEAVY LIGHT-DUTY TRUCKS FOR PM

Model year	Tier 1 percentage
1994	0
1995	0
1996	50
after 1996	100

TABLE H94–18—INTERMEDIATE USEFUL LIFE [1] STANDARDS (G/MI) FOR HEAVY LIGHT-DUTY TRUCKS FOR PM

Fuel	LVW (lbs)	ALVW (lbs)	Standards	PM
Gasoline	0–3750		Tier 0	
Gasoline	> 3750		Tier 0	
Gasoline		3751–5750	Tier 1	0.10
Gasoline		> 5750	Tier 1	0.12
Diesel	0–3750		Tier 0	0.26
Diesel	> 3750		Tier 0	0.13
Diesel		3751–5750	Tier 1	0.10
Diesel		> 5750	Tier 1	0.12
Methanol	0–3750		Tier 0	
Methanol	> 3750		Tier 0	
Methanol		3751–5750	Tier 1	0.10
Methanol		> 5750	Tier 1	0.12
Natural Gas	0–3750		Tier 0	[2] 0.26
Natural Gas	> 3750		Tier 0	[2] 0.13
Natural Gas		3751–5750	Tier 1	0.10
Natural Gas		> 5750	Tier 1	0.12
LPG	0–3750		Tier 0	[2] 0.26
LPG	> 3750		Tier 0	[2] 0.13
LPG		3751–5750	Tier 1	0.10
LPG		> 5750	Tier 1	0.12

[1] The applicable useful life is 5 years or 50,000 miles, whichever first occurs.
[2] Applicable only to diesel-cycle vehicles.

TABLE H94–19—FULL USEFUL LIFE [1] STANDARDS (G/MI) FOR HEAVY LIGHT-DUTY TRUCKS FOR PM

Fuel	LVW (lbs)	ALVW (lbs)	Standards	PM
Gasoline	0–3750		Tier 0	
Gasoline	> 3750		Tier 0	
Gasoline		3751–5750	Tier 1	0.10
Gasoline		> 5750	Tier 1	0.12
Diesel	0–3750		Tier 0	0.26
Diesel	> 3750		Tier 0	0.13
Diesel		3751–5750	Tier 1	0.10
Diesel		> 5750	Tier 1	0.12
Methanol	0–3750		Tier 0	
Methanol	> 3750		Tier 0	
Methanol		3751–5750	Tier 1	0.10
Methanol		> 5750	Tier 1	0.12

[1] The applicable useful life is 11 years or 120,000 miles, whichever first occurs, except that no enforcement testing will be done beyond 7 years or 90,000 miles, whichever first occurs.

(B)(*1*)(*i*) Sales percentages for the purposes of determining compliance with paragraph (a)(1)(ii)(A) of this section shall be based on total actual U.S. sales of light-duty vehicles of the applicable model year by a manufacturer to a dealer, distributor, fleet operator, broker, or any other entity which comprises the point of first sale.

(*ii*) The manufacturer may petition the Administrator to allow actual volume produced for U.S. sales to be used in lieu of actual U.S. sales for purposes of determining compliance with the implementation schedule sales percentages of tables H94–14 and H94–17 of this section. Such petition shall be submitted within 30 days of the end of the

model year to the Manufacturers Operations Division. For the petition to be granted, the manufacturer must establish to the satisfaction of the Administrator that actual production volume is functionally equivalent to actual sales volume.

(*iii*) The vehicles that are counted toward the implementation schedule sales percentage, or toward the total on which such percentage is based, for certification purposes as prescribed by § 86.094–9(a)(1)(ii)(B)(*1*)(*iii*) of subpart A of this part, shall be the same vehicles that are counted toward the implementation schedule sales percentage, or the total on which it is based, for in-use purposes.

(*iv*) Small volume manufacturers, as defined in § 86.092–14(b) (1) and (2), are exempt from the implementation schedules of tables H94–14 of this section for model years 1996 through 1998 and from the implementation schedules of table H94–17 of this section for model year 1996. For small volume manufacturers, Tier 0 standards of tables H94–15 and H94–16 continue to apply until model year 1999 and the Tier 0 standards of tables H94–18 and H94–19 continue to apply until model year 1997, when one hundred percent compliance with the Tier 1 standards of such tables is required. This exemption does not apply to small volume engine families as defined in § 86.092–14(b)(5).

(*2*)(*i*) For 1996 and 1997 model year heavy light-duty trucks, the engine families which comprise the required implementation schedule percentage of sales meeting Tier 1 standards for HCs, CO, and NO_X, for purposes of certification, shall be the same engine families which comprise the required implementation schedule percentage of sales meeting the interim in-use standards (labeled ''Tier 1_I'' in the tables of in-use standards) for in-use purposes.

(*ii*) For 1998 model year heavy light-duty trucks the engine families which comprise the required implementation schedule percentage of sales meeting interim in-use standards (labeled ''Tier 1_I'' in the tables of in-use standards) and final in-use standards (labeled ''Tier 1'' in the tables of in-use standards) for HCs, CO, and NO_X, for in-use purposes, shall be designated by the manufacturer at the time of certification.

(*iii*) For 1996 model year heavy light-duty trucks, the engine families which comprise the required implementation schedule percentage of sales meeting Tier 1 standards, for PM, for purposes of certification, shall be the same engine families which comprise the required implementation schedule percentage of sales meeting the final in-use standards (labeled ''Tier 1'' in the tables of in-use standards) for PM for in-use purposes.

(*3*) The manufacturer must state at the time of Application for Certification, based on projected U.S. sales or projected production for U.S. sale, which families will be used to attain the required implementation schedule sales percentages.

(*4*) A manufacturer can not use one set of engine families to meet its in-use intermediate useful life standards and another to meet its in-use full useful life standards. The same families which are used to meet the intermediate useful life standards will be required without deviation to meet the corresponding full useful life standards.

(iii) Exhaust emissions of carbon monoxide from 1994 and later model year light-duty trucks shall not exceed 0.50 percent of exhaust gas flow at curb idle at a useful life of 11 years or 120,000 miles, whichever first occurs (for Otto-cycle and methanol-fueled diesel-cycle light-duty trucks only).

(iv)(A) Engine families participating in the applicable NO_X averaging program as specified in § 86.094–9(a)(1)(iv)(A) shall be subject, for purposes of in-use compliance, to the NO_X family emission limit determined for that engine family for certification purposes, in lieu of the appropriate NO_X standard shown in the tables of in-use standards in this section.

(B) Engine families participating in the applicable particulate averaging program as specified in § 86.094–9(a)(1)(iv)(B) shall be subject, for purposes of in-use compliance, to the particulate family emission limit determined for that engine family for certification purposes, in lieu of the appropriate particulate standard shown in the tables of in-use standards in this section.

(v) CST emissions from model year 1996 and later gasoline-fueled Otto-cycle light-duty trucks measured and calculated in accordance with subpart O of this part may not exceed the standards listed in paragraphs (a)(1)(v)(A) and (B) of this section.

(A) Hydrocarbons: 220 ppm as hexane.

(B) Carbon monoxide: 1.2 percent.

(2) The standards set forth in paragraphs (a)(1)(i) and (a)(1)(ii) of this section refer to the exhaust emitted over a driving schedule as set forth in subpart B of this part and measured and calculated in accordance with those procedures. The test weight basis for light light-duty trucks, and for heavy light-duty trucks certified to the Tier 0 standards of this section, for the purposes of determining equivalent test weight as prescribed in §86.129–94, shall be loaded vehicle weight. The test weight basis for heavy light-duty trucks certified to the Tier 1 or Tier 1_I standards of this section, for the purposes of determining equivalent test weight as prescribed in §86.129–94, shall be adjusted loaded vehicle weight. The standard set forth in paragraph (a)(1)(iii) of this section refers to the exhaust emitted at curb idle and measured and calculated in accordance with the procedures set forth in subpart P of this part.

(3) The standards set forth in paragraph (a)(1)(v) of this section refer to the exhaust emitted during the CST as set forth in subpart O of this part and measured and calculated in accordance with those provisions.

(b) The provision of §86.090–8(b) through (k) of subpart A of this part apply to this section.

[56 FR 25781, June 5, 1991, as amended at 57 FR 31922, July 17, 1992; 58 FR 33211, June 16, 1993; 58 FR 58424, Nov. 1, 1993; 59 FR 48516, Sept. 21, 1994]

§86.709–99 In-use emission standards for 1999 and later model year light-duty trucks.

Section 86.709–99 includes text that specifies requirements that differ from §86.091–9 of subpart A of this part. Where a paragraph in §86.091–9 is identical and applicable to §86.709–99, this may be indicated by specifying the corresponding paragraph and the statement ''[Reserved]. For guidance see §86.091–9.'' Where a corresponding paragraph of §86.091–9 is not applicable, this is indicated by the statement ''[Reserved].''

(a)(1)(i)(A) *Light light-duty trucks.* In-use exhaust emissions from 1999 and later model year light light-duty trucks shall meet all standards in tables H99–1 and H99–2 in the rows designated with the applicable fuel type and loaded vehicle weight.

TABLE H99–1—INTERMEDIATE USEFUL LIFE [1] STANDARDS (G/MI) FOR LIGHT LIGHT-DUTY TRUCKS

Fuel	LVW (lbs)	THC	NMHC	THCE	NMHCE	CO	NO_X	PM
Gasoline	0–3750	.....	0.25	.....	.....	3.4	0.4	0.08
Gasoline	3751–5750	.....	0.32	.....	.....	4.4	0.7	0.08
Diesel	0–3750	.....	0.25	.....	.....	3.4	1.0	0.08
Diesel	3751–5750	.....	0.32	.....	.....	4.4	0.97	0.08
Methanol	0–3750	.....	.....	.....	0.25	3.4	0.4	0.08
Methanol	3751–5750	.....	.....	.....	0.32	4.4	0.7	0.08
Natural Gas	0–3750	.....	0.25	.....	.....	3.4	0.4	0.08
Natural Gas	3751–5750	.....	0.32	.....	.....	4.4	0.7	0.08
LPG	0–3750	.....	0.25	.....	.....	3.4	0.4	0.08
LPG	3751–5750	.....	0.32	.....	.....	4.4	0.7	0.08

[1] The applicable useful life is 5 years or 50,000 miles, whichever first occurs.

TABLE H99–2—FULL USEFUL LIFE STANDARDS (G/MI) FOR LIGHT LIGHT-DUTY TRUCKS

Fuel	LVW (lbs)	THC [2]	NMHC [1]	THCE [2]	NMHCE [1]	CO [1]	NO_X [1]	PM [1]
Gasoline	0–3750	0.80	0.31	.....	.....	4.2	0.6	0.10
Gasoline	3751–5750	0.80	0.40	.....	.....	5.5	0.97	0.10
Diesel	0–3750	0.80	0.31	.....	.....	4.2	1.25	0.10
Diesel	3751–5750	0.80	0.40	.....	.....	5.5	0.97	0.10
Methanol	0–3750	.....	.....	0.80	0.31	4.2	0.6	0.10
Methanol	3751–5750	.....	.....	0.80	0.40	5.5	0.97	0.10
Natural Gas	0–3750	.....	0.31	.....	.....	4.2	0.6	0.10
Natural Gas	3751–5750	.....	0.40	.....	.....	5.5	0.97	0.10

TABLE H99–2—FULL USEFUL LIFE STANDARDS (G/MI) FOR LIGHT LIGHT-DUTY TRUCKS—Continued

Fuel	LVW (lbs)	THC [2]	NMHC [1]	THCE [2]	NMHCE [1]	CO [1]	NO_x [1]	PM [1]
LPG	0–3750	0.80	0.31	.....	.....	4.2	0.6	0.10
LPG	3751–5750	0.80	0.40	.....	.....	5.5	0.97	0.10

[1] The applicable useful life is 10 yeras or 100,000 miles, whichever first occurs, except that no enforcement testing will be done beyond 7 years or 75,000 miles, whichever first occurs.
[2] The applicable useful life is 11 years or 120,000 miles, whichever first occurs.

(B)(*1*) Vehicles subject to the standards of paragraph (a)(1)(i)(A) of this section shall be all actual U.S. sales of light light-duty trucks of the applicable model year by a manufacturer.

(*2*) A manufacturer can not use one set of engine families to meet its in-use intermediate useful life standards and another to meet its in-use full useful life standards. The same families which are used to meet the intermediate useful life standards will be required without deviation to meet the corresponding full useful life standards.

(ii)(A) *Heavy light-duty trucks.* In-use exhaust emissions from 1999 and later model year heavy light-duty trucks shall meet all standards in tables H99–3 and H99–4 in the rows designated with the applicable fuel type and adjusted loaded vehicle weight.

TABLE H99–3—INTERMEDIATE USEFUL LIFE [1] STANDARDS (G/MI) FOR HEAVY LIGHT-DUTY TRUCKS

Fuel	ALVW (lbs)	THC	NMHC	THCE	NMHCE	CO	NO_x	PM
Gasoline	3751–5750	0.80	0.32	.....	.....	4.4	0.7	0.10
Gasoline	>5750	0.80	0.39	.....	.....	5.0	1.1	0.12
Diesel	3751–5750	0.80	0.32	.....	.....	4.4	0.98	0.10
Diesel	>5750	0.80	0.39	.....	.....	5.0	1.53	0.12
Methanol	3751–5750	.....	.....	0.80	0.32	4.4	0.7	0.10
Methanol	>5750	.....	.....	0.80	0.39	5.0	1.1	0.12
Natural Gas	3751–5750	.....	0.32	.....	.....	4.4	0.7	0.10
Natural Gas	>5750	.....	0.39	.....	.....	5.0	1.1	0.12
LPG	3751–5750	0.80	0.32	.....	.....	4.4	0.7	0.10
LPG	>5750	0.80	0.39	.....	.....	5.0	1.1	0.12

[1] The applicable useful life is 5 years or 50,000 miles, whichever first occurs.

TABLE H99–4—FULL USEFUL LIFE [1] STANDARDS (G/MI) FOR HEAVY LIGHT-DUTY TRUCKS

Fuel	ALVW (lbs)	THC [2]	NMHC [1]	THCE [2]	NMHCE [1]	CO [1]	NO_x [1]	PM [1]
Gasoline	3751–5750	0.80	0.46	.....	.....	6.4	0.98	0.10
Gasoline	>5750	0.80	0.56	.....	.....	7.3	1.53	0.12
Diesel	3751–5750	0.80	0.46	.....	.....	6.4	0.98	0.10
Diesel	>5750	0.80	0.56	.....	.....	7.3	1.53	0.12
Methanol	3751–5750	.....	.....	0.80	0.46	6.4	0.98	0.10
Methanol	>5750	.....	.....	0.80	0.56	7.3	1.53	0.12
Natural Gas	3751–5750	.....	0.46	.....	.....	6.4	0.98	0.10
Natural Gas	>5750	.....	0.56	.....	.....	7.3	1.53	0.12
LPG	3751–5750	0.80	0.46	.....	.....	6.4	0.98	0.10
LPG	>5750	0.80	0.56	.....	.....	7.3	1.53	0.12

[1] The applicable useful life is 11 years or 120,000 miles, whichever first occurs, except that no enforcement testing will be done beyond 7 years or 90,000 miles, whichever first occurs.
[2] The applicable useful life is 11 years or 120,000 miles, whichever first occurs.

(B)(*1*) Vehicles subject to the standards of paragraph (a)(1)(ii)(A) of this section shall be all actual U.S. sales of heavy light-duty trucks of the applicable model year by a manufacturer.

(*2*) A manufacturer can not use one set of engine families to meet its in-use intermediate useful life standards and another to meet its in-use full useful life standards. The same families which are used to meet the intermediate useful life standards will be required without deviation to meet the corresponding full useful life standards.

(iii) Exhaust emissions of carbon monoxide from 1999 and later model year light-duty trucks shall not exceed 0.50 percent of exhaust gas flow at curb

idle at a useful life of 11 years or 120,000 miles, whichever first occurs (for Otto-cycle and methanol-fueled diesel-cycle light-duty trucks only)

(iv) CST emissions from gasoline-fueled Otto-cycle light-duty trucks measured and calculated in accordance with subpart O of this part may not exceed the standards listed in paragraphs (a)(1)(iv) (A) and (B) of this section.

(A) Hydrocarbons: 220 ppm as hexane.

(B) Carbon monoxide: 1.2 percent.

(2) The standards set forth in paragraphs (a)(1)(i) and (a)(1)(ii) of this section refer to the exhaust emitted over a driving schedule as set forth in subpart B of this part and measured and calculated in accordance with those procedures. The test weight basis for light light-duty trucks, for the purposes of determining equivalent test weight as prescribed in §86.129–94, shall be loaded vehicle weight. The test weight basis for heavy light-duty trucks, for the purposes of determining equivalent test weight as prescribed in §86.129–94, shall be adjusted loaded vehicle weight. The standard set forth in paragraph (a)(1)(iii) of this section refers to the exhaust emitted at curb idle and measured and calculated in accordance with the procedures set forth in subpart P of this part.

(3) The standards set forth in paragraph (a)(1)(iv) of this section refer to the exhaust emitted during the CST as set forth in subpart O of this part and measured and calculated in accordance with those provisions.

(b) The provisions of §86.097–9(b), (c), and (g) through (k) of subpart A of this part apply to this section.

[56 FR 25781, June 5, 1991, as amended at 57 FR 31922, July 17, 1992; 58 FR 58425, Nov. 1, 1993; 59 FR 48520, Sept. 21, 1994]

Subpart I—Emission Regulations for New Diesel Heavy-Duty Engines; Smoke Exhaust Test Procedure

AUTHORITY: Secs. 202, 206, 207, 208, 301(a), Clean Air Act; as amended 42 U.S.C. 7521, 7524, 7541, 7542, and 7601.

SOURCE: 48 FR 52203, Nov. 16, 1983, unless otherwise noted.

§86.884–1 General applicability.

The provisions of this subpart are applicable to new petroleum-fueled diesel heavy-duty engines beginning with the 1984 model year, methanol-fueled diesel heavy-duty engines beginning with the 1990 model year and natural gas-fueled and liquefied petroleum gas-fueled diesel heavy-duty engines beginning with the 1997 model year. The provisions of this subpart are optional prior to the 1997 model year for natural gas-fueled and liquefied petroleum gas-fueled diesel heavy-duty engines.

[59 FR 48521, Sept. 21, 1994]

§86.884–2 Definitions.

The definitions in §86.084–2 apply to this subpart.

§86.884–3 Abbreviations.

The abbreviations in §86.078–3 apply to this subpart.

§86.884–4 Section numbering.

The section numbering system set forth in §86.084–4 applies to this subpart.

[48 FR 52203, Nov. 16, 1983, as amended at 59 FR 48521, Sept. 21, 1994]

§86.884–5 Test procedures.

The procedures described in this and subsequent sections will be the test program to determine the conformity of engines with the standards set forth in §86.084–11(b).

(a) The test consists of a prescribed sequence of engine operating conditions on an engine dynamometer with continuous examination of the exhaust gases. The test is applicable equally to controlled engines equipped with means for preventing, controlling, or eliminating smoke emissions and to uncontrolled engines.

(b) The test is designed to determine the opacity of smoke in exhaust emissions during those engine operating conditions which tend to promote smoke from diesel vehicles.

(c) The test procedure begins with a preconditioned engine which is then run through preloading and preconditioning operations. After an idling period, the engine is operated through acceleration and lugging modes during which smoke emission

measurements are made to compare with the standards. The engine is then returned to the idle condition and the acceleration and lugging modes are repeated. Three consecutive sequences of acceleration and lugging constitutes the full set of operating conditions for smoke emission measurement.

(d)(1) Except in cases of component mulfunction or failure, all emission control systems installed on, or incorporated in, a new motor vehicle engine shall be functioning during all procedures in this subpart.

(2) Maintenance to correct component malfunction or failure shall be authorized in accordance with § 86.084–25.

[48 FR 52203, Nov. 16, 1983, as amended at 49 FR 48140, Dec. 10, 1984; 54 FR 14559, Apr. 11, 1989]

§ 86.884–6 Fuel specifications.

The requirements of this section are set forth in § 86.1313.

[54 FR 14559, Apr. 11, 1989]

§ 86.884–7 Dynamometer operation cycle for smoke emission tests.

(a) The following sequence of operations shall be performed during engine dynamometer testing of smoke emissions, starting with the dynamometer preloading determined and the engine preconditioned (§ 86.884–12(c)).

(1) *Idle Mode.* The engine is caused to idle for 5.0 to 5.5 minutes at the manufacturer's recommended curb idle speed. The dynamometer controls shall be set to provide the speed and load necessary to comply with the heavy-duty ''curb idle'' definition per § 86.084–2, in accordance with predominant engine application.

(2) *Acceleration mode.* (i) The engine speed shall be increased to 200 ±50 rpm above the measured free idle speed measured at the point where the throttle begins to move from part-throttle to the full throttle position. The speed anywhere during this mode should not exceed this checkpoint speed by more than 50 rpm. The duration of this first acceleration shall be three seconds or less measured from the point where the speed first begins to increase above idle to the point where the throttle reaches full open position.

(ii) Immediately upon completion of the mode specified in paragraph (a)(2)(i) of this section, the throttle shall be moved rapidly to, and held in, the fully open position. The inertia of the engine and the dynamometer, or alternately a preselected dynamometer load, shall be used to control the acceleration of the engine so that the speed increases to 85 percent of the rated speed in 5 ±1.5 seconds. This acceleration shall be linear within 100 rpm as specified in § 86.884–13(c).

(iii) After the engine reaches the speed required in paragraph (a)(2)(ii) of this section the throttle shall be moved rapidly to, and held in, the fully closed position. Immediately after the throttle is closed, the preselected load required to perform the acceleration in paragraph (a)(2)(iv) of this section shall be applied. For electric motoring dynamometer operation in speed mode, the deceleration shall be performed in 2±1.5 seconds.

(iv) When the engine decelerates to the intermediate speed (within 50 rpm), the throttle shall be moved rapidly to, and held in, the fully open position. The preselected dynamometer load which was applied during the preceding transition period shall be used to control the acceleration of the engine so that the speed increases to at least 95 percent of the rated speed in 10 ±2 seconds.

(v) For electric dynamometer operation in speed mode, motoring assist may be used to offset excessive dynamometer inertia load when necessary. No negative flywheel torque shall occur during any of the three acceleration modes in paragraph (a)(2) of this section except for a maximum of 10ft-lbs. for the first 0.5 second of the mode.

(3) *Lugging mode.* (i) Immediately upon the completion of the preceding acceleration mode, the dynamometer controls shall be adjusted to permit the engine to develop maximum horsepower at rated speed. This transition period shall be 50 to 60 seconds in duration. During the last 10 seconds of this period, the average engine speed shall be maintained within 50 rpm of the rated speed, and the average observed power (corrected, if necessary, to rating conditions) shall be no less than 95 percent of the maximum horsepower

developed during the preconditioning prior to the smoke cycle.

(ii) With the throttle remaining in the fully open position, the dynamometer controls shall be adjusted gradually so that the engine speed is reduced to the intermediate speed. This lugging operation shall be performed smoothly over a period of 35#5 seconds. The rate of slowing of the engine shall be linear, within 100 rpm, as specified in § 86.884–13(c).

(4) *Engine unloading.* Within five seconds of completing the preceding lugging mode, the dynamometer and engine controls shall be returned to the idle position described in paragraph (a)(1) of this section. The engine must be at free idle condition within one minute after completion of the lugging mode.

(b) The procedures described in paragraphs (a)(1) through (a)(4) of this section shall be repeated until three consecutive valid cycles have been completed. If three valid cycles have not been completed after a total of six consecutive cycles have been run, the engine shall be preconditioned by operation at maximum horsepower at rated speed for 10 minutes before the test sequence is repeated.

[48 FR 52203, Nov. 16, 1983, as amended at 49 FR 48141, Dec. 10, 1984; 52 FR 47870, Dec. 16, 1987; 62 FR 47122, Sept. 5, 1997]

§ 86.884–8 Dynamometer and engine equipment.

The following equipment shall be used for smoke emission testing of engines on engine dynamometers:

(a) An engine dynamometer with adequate characteristics to perform the test cycle described in §86.884–7.

(b) An engine cooling system having sufficient capacity to maintain the engine at normal operating temperatures during conduct of the prescribed engine tests.

(c) An exhaust system with an appropriate type of smokemeter placed 10 to 32 feet from the exhaust manifold(s), turbocharger outlet(s), exhaust aftertreatment device(s), or crossover junction (on Vee engines), whichever is farthest downstream. The smoke exhaust system can share the same hardware required in part 86, subpart N, § 86.1327–84(f)(2), insofar as that hardware also meets the following smoke test requirements. The smoke exhaust system shall present an exhaust backpressure within +0.2 inch Hg of the upper limit at maximum rated horsepower, as established by the engine manufacturer in his sales and service literature for vehicle application. The following options may also be used:

(1) For engines with multiple exhaust outlets, join the exhaust outlets together into a single exhaust system and install the smokemeter 10 to 32 feet downstream from the junction of the individual exhaust outlets, or exhaust aftertreatment device(s), whichever is farthest downstream.

(2) For engines with multiple exhaust outlets, install a smokemeter in each of the exhaust pipes 10 to 32 feet downstream from each exhaust manifold, turbocharger outlet, or exhaust aftertreatment device, whichever is farthest downstream.

(3) For engines with multiple exhaust outlets, install a smokemeter on the exhaust pipe which produces the highest smoke levels 10 to 32 feet downstream from the exhaust manifold, turbocharger outlet, or exhaust aftertreatment device, whichever is farthest downstream. It may be required to make smoke measurements from other exhaust outlets if deemed appropriate by the Administrator.

(4) When utilizing an end-of-line smokemeter, the terminal two feet of the exhaust pipe used for smoke measurement shall be of a circular cross section and be free of elbows and bends. The end of the pipe shall be cut off squarely. The terminal two feet of the exhaust pipe shall have a nominal inside diameter in accordance with the engine being tested, as specified below:

Maximum Rated Horsepower	Standard Exhaust Pipe Diameter, inches (meters)
Less than 101	2 (0.051)
101 to 200	3 (0.076)
201 to 300	4 (0.102)
301 to 500	5 (0.127)
501 or more	5 (0.127)[1] or 6 (0.152)[2]

[1] Applicable for on-highway engines.
[2] Applicable for nonroad engines.

(5) When utilizing an in-line smokemeter, there shall be no change in the exhaust pipe diameter within 3 exhaust pipe diameters before or after

the centerline of the smokemeter optics. Within 6 exhaust pipe diameters upstream of the centerline of the smokemeter optics, no change in exhaust pipe diameter may exceed a 12 degree half-angle.

(d) An engine air inlet system presenting an air inlet restriction within one inch of water of the upper limit for the engine operating condition which results in maximum air flow, as established by the engine manufacturer in his sales and service literature, for the engine being tested.

[48 FR 52203, Nov. 16, 1983, as amended at 62 FR 47122, Sept. 5, 1997]

§ 86.884–9 Smoke measurement system.

(a) *Schematic drawing.* The Figure I84–1 is a schematic drawing of the optical system of the light extinction meter.

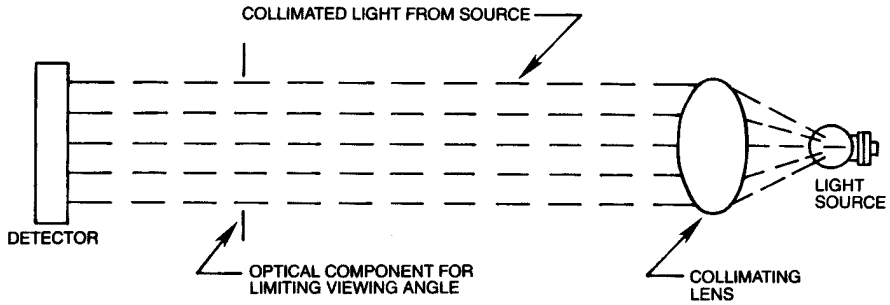

Figure I84-1 SMOKEMETER OPTICAL SYSTEM (SCHEMATIC)

(b) *Equipment.* The following equipment shall be used in the system.

(1) Adapter—the smokemeter optical unit may be mounted on a fixed or movable frame. The normal unrestricted shape of the exhaust plume shall not be modified by the adaptor, the meter, or any ventilatory system used to remove the exhaust from the test site.

(2) Smokemeter (light extinction meter)—continuous recording, full-flow light obscuration meter.

(i) It is positioned so that a built-in light beam traverses the exhaust smoke plume at right angles to the axis of the exhaust stream.

(ii) The smokemeter light source shall be an incandescent lamp with a color temperature range of 2800K to 3250K, or a light source with a spectral peak between 550 to 570 nanometers.

(iii) The light output is collimated to a beam with a maximum diameter of 1.125 inches and an included angle of divergence within a 6° included angle.

(iv) The light detector shall be a photocell or photodiode. If the light source is an incandescent lamp, the detector shall have a spectral response similar to the photopic curve of the human eye (a maximum response in the range of 550 to 570 nanometers, to less than 4 percent of that maximum response below 430 nanometers and above 680 nanometers).

(v) A collimating tube with apertures equal to the beam diameter is attached to the detector to restrict the viewing angle of the detector to within a 16° included angle.

(vi) An amplified signal corresponding to the amount of light blocked is recorded continuously on a remote recorder.

(vii) An air curtain across the light source and detector window assemblies may be used to minimize deposition of smoke particles on those surfaces provided that it does not measurably affect the opacity of the plume.

(viii) The smokemeter consists of two units; an optical unit and a remote control unit.

(ix) Light extinction meters employing substantially identical measurement principles and producing substantially equivalent results, but which

employ other electronic and optical techniques, may be used only after having been approved in advance by the Administrator.

(3) Recorder—a continuous recorder, with variable chart speed over a minimal range of 0.5 to 8.0 inches per minute (or equivalent) and an automatic marker indicating 1-second intervals continuously records the exhaust gas opacity, engine rpm and throttle position.

(i) The recorder is equipped to indicate only when the throttle is in the fully open or fully closed position.

(ii) The recorder scale for opacity is linear and calibrated to read from 0 to 100 percent opacity full scale.

(iii) The opacity trace has a resolution within one percent opacity.

(iv) The recorder scale for engine rpm is linear and has a resolution of 30 rpm.

(v) The throttle position trace clearly indicates when the throttle is in the fully open and fully closed positions.

(vi) Any means other than a strip-chart recorder may be used provided it produces a permanent visual data record of quality equal to or better than that described above (e.g., tabulated data, traces, or plots).

(4) The recorder used with the smokemeter shall be capable of full-scale deflection in 0.5 second or less. The smokemeter-recorder combination may be damped so that signals with a frequency higher than 10 cycles per second are attenuated. A separate lowpass electronic filter with the following performance characteristics may be installed between the smokemeter and the recorder to achieve the high-frequency attenuation:

(i) Three decibel point—10 cycles per second.

(ii) Insertion loss—zero ±0.5 decibel.

(iii) Selectivity—12 decibels per octave above 10 cycles per second.

(iv) Attenuation—27 decibels down at 40 cycles per second minimum.

(5) In lieu of the use of chart recorders, automatic data collection equipment may be used to record all required data. Automatic data processing equipment may then be used to perform the data analysis specified in §86.884–13. The automatic data collection equipment must be capable of sampling at least two records per second.

(c) *Assembling equipment.* (1) The optical unit of the smokemeter shall be mounted radially to the exhaust pipe so that the measurement will be made at right angles to the axis of the exhaust plume. For an end-of-line smokemeter the distance from the optical centerline to the exhaust pipe outlet shall be 1 ±0.25 inch. The full flow of the exhaust stream shall be centered between the source and the detector apertures (or windows and lenses) and on the axis of the light beam.

(2) Power shall be supplied to the control unit of the smokemeter in time to allow at least 15 minutes for stabilization prior to testing.

[48 FR 52203, Nov. 16, 1983, as amended at 49 FR 48141, Dec. 10, 1984; 62 FR 47122, Sept. 5, 1997]

§86.884–10 Information.

The following information, as applicable, shall be recorded for each test:

(a) Engine description and specifications. A copy of the information specified in this paragraph must accompany each engine sent to the Administrator for compliance testing. If the engine is submitted to the Administrator for testing under subpart N, only the information specified in §86.1344–84 need accompany the engine. The manufacturer need not record the information specified in this paragraph for each test if the information, with exception of paragraphs (a)(3), (a)(12), and (a)(13) of this section, is included in the manufacturer's part I.

(1) Engine-system combination.

(2) Engine identification numbers.

(3) Number of hours of operation accumulated on engine.

(4) Rated maximum horsepower and torque.

(5) Maximum horsepower and torque speeds.

(6) Engine displacement.

(7) Governed speed.

(8) Idle rpm.

(9) Fuel consumption at maximum power and torque.

(10) Maximum air flow.

(11) Maximum and test air inlet restriction.

(12) Exhaust pipe diameter(s).

(13) Maximum exhaust system backpressure.

(b) *Test data; general.* This information may be recorded at any time between four hours prior to the test and four hours after the test.

(1) Engine-system combination.

(2) Engine identification numbers.

(3) Instrument operator.

(4) Engine operator.

(5) Number of hours of operation accumulated on the engine prior to beginning the warm-up portion of the test.

(6) Calibration date(s) of neutral density filters used to calibrate the smokemeter.

(c) Test data; pre-test.

(1) Date and time of day.

(2) Test number.

(3) Barometric pressure.

(4) [Reserved]

(5) Intake air humidity and temperature:

(i) *Humidity-conditioned air supply.* Air that has had its absolute humidity altered is considered humidity-conditioned air. For this type of intake air supply, the humidity measurement must be made within the intake air supply system, and after the humidity conditioning has taken place.

(ii) *Non-conditioned air supply.* Humidity measurements in non-conditioned intake air supply systems must be made in the intake air stream entering the supply system and within 18 inches of the inlet for supply system. Alternatively, the humidity measurements can be measured within the intake air supply stream.

(iii) Engine intake air temperature measurement must be made within 48 inches of the engine. The measurement location must be made either in the supply system or in the air stream entering the supply system.

(d) *Test data; modal.* (1) Observed engine torque and speed during the steady-state test conditions specified in § 86.884–7(a)(3)(i).

(2) On the recorder or automatic data collection equipment: Identify zero traces—calibration traces—idle traces (or printout of the zero and calibration values)—closed-throttle trace-open throttle trace—acceleration and lugdown test traces—start and finish of each test.

[48 FR 52203, Nov. 16, 1983, as amended at 49 FR 48141, Dec. 10, 1984; 62 FR 47123, Sept. 5, 1997]

§ 86.884–11 Instrument checks.

(a) The smokemeter shall be checked according to the following procedure prior to each test:

(1) [Reserved]

(2) The zero control shall be adjusted under conditions of ''no smoke'' to give a recorder or data collection equipment response of zero;

(3) Calibrated neutral density filters having approximately 10, 20, and 40 percent opacity shall be employed to check the linearity of the instrument. The filter(s) shall be inserted in the light path perpendicular to the axis of the beam and adjacent to the opening from which the beam of light from the light source emanates, and the recorder response shall be noted. Filters with exposed filtering media should be checked for opacity every six months; all other filters shall be checked every year, using NBS or equivalent reference filters. Deviations in excess of 1 percent of the nominal opacity shall be corrected.

(b) The instruments for measuring and recording engine rpm, engine torque, air inlet restrictions, exhaust system backpressure, throttle position, etc., which are used in the test prescribed herein, shall be calibrated in accordance with good engineering practice.

[48 FR 52203, Nov. 16, 1983, as amended at 49 FR 48141, Dec. 10, 1984]

§ 86.884–12 Test run.

(a) The temperature of the air supplied to the engine shall be between 68 °F and 86 °F. The engine fuel inlet temperature shall be 100 °F ±10 °F and shall be measured at a point specified by the manufacturer. The observed barometric pressure shall be between 28.5 inches and 31 inches Hg. Higher air temperature or lower barometric pressure may be used, if desired, but no allowance will be made for possible increased smoke emissions because of such conditions.

(b) The governor and fuel system shall have been adjusted to provide engine performance at the levels in the application for certification required under §86.084–21.

(c) The following steps shall be taken for each test:

(1) Start cooling system;

(2) Warm up the engine by the procedure described in §86.1332–84(d)(3) (i) through (v).

(3) Determine by experimentation the dynamometer inertia and dynamometer load required to perform the acceleration in the dynamometer cycle for smoke emission tests (§86.884–7(a)(2)). In a manner appropriate for the dynamometer and controls being used, arrange to conduct the acceleration mode;

(4) Install smokemeter optical unit and connect it to the recorder/data collection system. Connect the engine rpm and throttle position sensing devices to the recorder/data collection system;

(5) Turn on purge air to the optical unit of the smokemeter, if purge air is used;

(6) Check and record zero and span settings of the smokemeter. (If a recorder is used, a chart speed of approximately one inch per minute shall be used.) The optical unit shall be retracted from its position about the exhaust stream if the engine is left running;

(7) Precondition the engine by operating it for 10 minutes at maximum rated horsepower;

(8) Proceed with the sequence of smoke emission measurements on the engine dynamometer as prescribed in §86.884–7;

(9)(i) During the test sequence of §86.884–7, continuously record smoke measurements, engine rpm, and throttle position.

(ii) If a chart recorder is used for data collection, it shall be run at a minimum chart speed of one inch per minute during the idle mode and transitional periods, and eight inches per minute during the acceleration and lugging modes.

(iii) Automatic data collection equipment, if used, shall sample at least two records per second.

(iv) The smoke meter zero and full scale response may be rechecked and reset during the idle mode of each test sequence.

(v) If either zero or full-scale drift is in excess of 2 percent opacity, the smokemeter controls must be readjusted and the test must be repeated;

(10) Turn off engine;

(11)(i) Check zero and reset if necessary.

(ii) Check span response (*linearity*) of the smokemeter by inserting neutral density filters.

(iii) If either zero drift *or the linearity check* is in excess of two percent opacity, the results shall be invalidated.

[48 FR 52203, Nov. 16, 1983, as amended at 49 FR 48141, Dec. 10, 1984; 52 FR 47870, Dec. 16, 1987]

§86.884–13 Data analysis.

The following procedure shall be used to analyze the test data:

(a) Locate the modes specified in §86.884–7(a)(1) through (a)(4) by applying the following starting and ending criteria:

(1) The idle mode specified in §86.884–7(a)(1) starts when engine preconditioning or the lugging mode of a preceding cycle has been completed and ends when the engine speed is raised above the idle speed.

(2) The acceleration mode specified in §86.884–7(a)(2)(i) starts when the preceding idle mode has been completed and ends when the throttle is in the fully open position, as indicated by the throttle position trace as specified in §86.884–7(a)(2)(ii).

(3) The acceleration mode specified in §86.884–7(a)(2)(ii) starts when the preceding acceleration mode has been completed and ends when the engine speed reaches 85 percent of the rated speed.

(4) The transition period specified in §86.884–7(a)(2)(iii) starts when the preceding acceleration mode has been completed and ends when the throttle is in the fully open position as indicated by the throttle position trace, as specified in §86.884–7(a)(2)(iv).

(5) The acceleration mode specified in §86.884–7(a)(2)(iv) starts when the preceding transition period has been completed and ends when the engine speed reaches 95 percent of the rated speed.

(6) The transition period specified in § 86.884–7 (a)(3)(i) starts when the preceding acceleration mode has been completed and ends when the engine speed is 50 rpm below the rated speed and the provisions of § 86.884–7 (a)(3)(i) are met.

(7) The lugging mode specified in § 86.884–7(a)(3)(ii) starts when the preceding transition period has been completed and ends when the engine speed is at the intermediate speed.

(b) Determine if the test requirements of § 86.884–7 are met by applying the following modal criteria:

(1) Idle mode as specified in § 86.884–7(a)(1):

(i) Duration: 5 to 5.5 minutes.

(ii) Speed: within specification during the last four minutes of the mode.

(2) Acceleration mode as specified in § 86.884–7(a)(2)(i).

(i) Duration: three seconds or less.

(ii) Speed increase: 200±50 rpm.

(3) Acceleration mode as specified in § 86.884–7(a)(2)(ii);

(i) Linearity: ±100 rpm as specified in paragraph (c) of this section.

(ii) Duration: 3.5 to 6.5 seconds.

(iii) Throttle position: fully open until speed is at least 85 percent of the rated speed.

(4) Transition period as specified in § 86.884–7(a)(2)(iii):

(i) Throttle position: moved rapidly to, and held in, the fully closed position.

(5) Acceleration mode as specified in § 86.884–7(a)(2)(iv):

(i) Duration: 8 to 12 seconds.

(ii) Throttle position: fully open when speed is at intermediate speed.

(6) Transition period as specified in § 86.884–7(a)(3)(i):

(i) Duration: 50 to 60 seconds.

(ii) Average speed during the last 10 seconds shall be within ±50 rpm of rated speed.

(iii) Average observed power during the last 10 seconds shall be at least 95 percent of the horsepower developed during the preconditioning mode.

(7) Lugging mode as specified in § 86.884–7(a)(3)(ii):

(i) Linearity: ±100 rpm as specified in paragraph (c) of this section.

(ii) Duration: 30 to 40 seconds.

(iii) Speed at end: intermediate speed.

(c) Determine if the linearity requirements of § 86.884–7 were met by means of the following procedure:

(1) For the acceleration mode specified in § 86.884–7(a)(2)(ii), note the maximum deflection of the rpm trace from a straight line drawn between the starting and ending points specified in paragraph (a)(3) of this section.

(2) For the lugging mode specified in § 86.884–7(a)(3)(ii), note the maximum deflection of the rpm trace from a straight line drawn from the starting and ending points specified in paragraph (a)(7) of this section.

(3) The test results will be invalid if any deflection is greater than 100 rpm.

(4) This linearity check may be performed by direct analysis of the recorder traces, or by computer analysis of data collected by automatic data collection equipment.

(d) Analyze the smoke trace by means of the following procedure:

(1) Starting at the beginning of the first acceleration, as defined in paragraph (a)(2) of this section, and stopping at the end of the second acceleration, as defined in paragraph (a)(3) of this section, divide the smoke trace into half-second intervals. Similarly, subdivide into half-second intervals the third acceleration mode and the lugging mode as defined by paragraphs (a)(5) and (7) respectively, of this section.

(2) Determine the average smoke reading during each half-second interval.

(3) Locate and record the 15 highest half-second readings during the acceleration mode of each dynamometer cycle.

(4) Locate and record the five highest half-second readings during the lugging mode of each dynamometer cycle.

(5) Examine the average half-second values which were determined in paragraphs (d)(3) and (d)(4) of this section and record the three highest values for each dynamometer cycle.

(6) This smoke trace analysis may be performed by direct analysis of the recorder traces, or by computer analysis of data collected by automatic data collection equipment.

[48 FR 52203, Nov. 16, 1983, as amended at 49 FR 48141, Dec. 10, 1984; 62 FR 47123, Sept. 5, 1997]

§86.884–14 Calculations.

(a) If the measured half-second opacity values were obtained with a smokemeter with an optical path length different than shown in the table in §86.884–8(c), then convert the measured half-second values or the original instantaneous values to the appropriate equivalent optical path length values specified in the table. Convert the opacity values according to the following equations:

$N_s=100\times(1-(1-N_m/100)^{L_S/L_M})$

L_m and L_s must use consistent units in the above equation

Where:

N_m=Measured half-second value for conversion, percent opacity

L_m=Measuring smokemeter optical path length, meters

L_s=Standard optical path length corresponding with engine power, n

N_s=Standard half-second value, percent opacity

(b) Average the 45 readings in §86.884–13(d)(3) or the equivalent converted values from paragraph (a) of this section if appropriate, and designate the value as ''A''. This is the value for the engine acceleration mode.

(c) Average the 15 readings in §86.884–13(d)(4) or the equivalent converted values from paragraph (a) of this section if appropriate, and designate the value as ''B''. This is the value for the engine lugging mode.

(d) Average the 9 readings in §86.884–13(d)(5) or the equivalent converted values from paragraph (a) of this section if appropriate, and designate the value as ''C''. This is the value for the peaks in either mode.

(e)(1) If multiple smokemeters were used, the half-second values for each mode from each smokemeter shall be combined and the calculated average based upon the total number of combined values.

(2) For example, if two smokemeters were used for acceleration mode data, 45 half-second values in each data set from both smokemeters would be combined to form a data set of 90 values, which would then be averaged.

[62 FR 47123, Sept. 5, 1997]

Subpart J—Fees for the Motor Vehicle and Engine Compliance Program

SOURCE: 57 FR 30055, July 7, 1992, unless otherwise noted.

§86.901–93 Abbreviations.

The abbreviations in this section apply to this subpart and have the following meanings:

CAFE—Corporate Average Fuel Economy,
Cal—California,
CPI—Consumer Price Index,
ESI—Engine System Information,
EPA—U.S. Environmental Protection Agency,
Fed—Federal,
HDE—Heavy-duty engine,
HDV—Heavy-duty vehicle,
ICI—Independent Commercial Importer,
LDV—Light-duty vehicle,
LDT—Light-duty truck,
MC—Motorcycle,
MVEPC—Motor Vehicle and Engine Compliance Program,
MY—Model Year,
OEM—Original equipment manufacturer,
SEA—Selective Enforcement Auditing.

§86.902–93 Definitions.

California-only certificate is a Certificate of Conformity issued by EPA which only signifies compliance with the emission standards established by California.

Certification request means a manufacturer's request for certification evidence by the submission of an application for certification, ESI data sheet, or ICI Carryover data sheet.

Engine-system combination as defined in 40 CFR 86.082–2, means an engine family-exhaust emission control system combination.

Federal certificate is a Certificate of Conformity issued by EPA which signifies compliance with emission standards in 40 CFR part 86, subpart A.

Fuel economy basic engine means a unique combination of manufacturer, engine displacement, number of cylinders, fuel system, catalyst usage, and other characteristics specified by the Administrator.

Filing form means the MVECP Fee Filing Form to be sent with payment of the MVECP fee.

Signed means a certification request which results in a signed Certificate of Conformity.

Unsigned means a certification request which does not result in a signed Certificate of Conformity because it is either voluntarily withdrawn by the manufacturer or does not receive approval from the EPA.

§ 86.903–93 Applicability.

This subpart prescribes fees to be charged for the MVECP for 1993 and later Mys. The fees charged will apply to all manufacturers' and ICIs' LDVs, LDTs, HDVs, HDEs, and MCs. Nothing in this subpart shall be construed to limit the Administrator's authority to require manufacturer or confirmatory testing as provided in the Clean Air Act, including authority to require manufacturer in-use testing as provided in section 208 of the Clean Air Act.

§ 86.904–93 Section numbering; construction.

(a)(1) The MY of initial applicability is indicated by the section number. The two digits following the hyphen designate the first MY for which a section is effective. A section remains effective until superseded.

(2) *Example.* Section 86.901–93 applies to the 1993 and subsequent MYs until superseded. If § 86.901–96 is promulgated, it will take effect beginning with the 1996 MY; § 86.901–93 will apply to MYs 1993 through 1995.

(b)(1) A section reference without a MY suffix refers to the section applicable for the appropriate MY.

(2) *Example.* For a reference to § 86.901, one would refer to § 86.901–xx where xx is the last two digits of the model year in question.

§ 86.905–93 Purpose.

The MVECP includes all compliance, enforcement, and related activities performed by EPA which are associated with certification, fuel economy, SEA, and in-use compliance programs. The fee will recover those compliance, investigation and review costs which the EPA incurs in providing vehicle and engine manufacturers or ICIs with Certificates of Conformity, fuel economy labels, CAFE calculations, and ICI review necessary to market vehicles in the U.S. and to meet requirements otherwise imposed by statute.

§ 86.906–93 MVEPC certification request types.

Certification requests are grouped into three types corresponding to the three major divisions of regulated mobile sources: LDVs/LDTs; HDVs/HDEs; and MCs.

§ 86.907–93 Fee amounts.

The fee for each certification request type is:

	MY 1993	MY 1994 (and later)
LDV/LDT		
Fed Signed	$11,865	$23,731
Cal-only Signed	4,563	9,127
Fed Unsigned	1,095	2,190
Cal-only Unsigned	1,095	2,190
HDE/HDV		
Fed Signed	6,292	12,584
Cal-only Signed	1,072	2,145
Fed Unsigned	1,072	2,145
Cal-only Unsigned	1,072	2,145
All Evaporative-only	1,072	2,145
MCs		
Fed Signed	420	840
Cal-only Signed	420	840
Fed Unsigned	420	840
Cal-only Unsigned	420	840

§ 86.908–93 Waivers and refunds.

(a) *Request for waiver.* The Administrator may waive part of any fee imposed by § 86.907 of this subpart.

(1) A waiver will be granted to an applicant if the Administrator determines that:

(i) The certificate is to be used for sale of vehicles or engines within the United States; and

(ii) The full fee for a certification request for a MY exceeds 1% of the aggregate projected retail sales price of all vehicles covered by that certificate.

(2) The request for waiver must be submitted prior to the payment of any fee and shall include evidence, such as prior actual sales, retail sales price, and previous waiver requests, clearly showing that the applicant satisfies the two waiver criteria. The retail sales price will be based on the total projected sales of all vehicles under a certificate, including vehicles modified under the modification and test option in 40 CFR 85.1509. For an ICI certificate, the retail sales price shall be based on the applicable National Automobile Dealer's Association (NADA)

appraisal guide and/or other evidence of the actual market value.

(3) If a waiver is granted, the fee to be paid by the applicant shall be 1% of the aggregate projected retail sales price of the vehicles or engines to be covered by the certification request.

(4) The waiver request will be reviewed by EPA.

(i) EPA or its designee will analyze each waiver request to determine whether the applicant has met the standards for a waiver and then will notify the applicant of its grant or denial.

(ii) If the request is denied, the applicant will have 30 days from the date of notification of the denial to submit the appropriate fee to EPA or appeal the denial.

(5) Whenever the aggregate projected retail sales price of the vehicles or engines to be covered by the certification request changes and/or the certificate which is under a fee waiver expires, the applicant, as appropriate:

(i) Shall submit a filing form with payment of the additional waiver fee; or

(ii) May submit a request for a refund.

(6) The total waiver fee shall not exceed the full fee amount for the applicable certification request type.

(b) *Request for refund.* The Administrator may refund a specified part of any fee imposed by §86.907 of this subpart if the applicant fails to obtain a signed certificate and requests a refund.

(1) That portion of the total fee to be refunded will be as follows:

	Federal (percent)	California only (percent)
LDV/LDT	90.8	76.0
HDE/HDV	83.0	0
HD-Evaporative only	0	0
MC	0	0

(2) For a refund of a portion of a waiver payment due to a decrease in the projected retail sales price of the vehicles or engines to be covered by the certification request the applicant should submit documentation to EPA detailing the waiver fee adjustment.

(c) *Waiver and refund address.* A request for a waiver or refund of part of a fee shall be submitted in writing by the applicant to the Environmental Protection Agency, Motor Vehicle and Engine Compliance Program, Certification Division, 2565 Plymouth Road, Ann Arbor, MI 48105.

§86.909–93 Payment.

(a) All fees required by this section shall be paid by money order, bank draft, certified check, corporate check, or electronic funds transfer payable in U.S. dollars to the order of the Environmental Protection Agency.

(b) All fees shall be forwarded with the filing form to the EPA to the address designated on the filing form.

(c) An application for which a partial waiver of the fee has been requested will not be accepted for processing until the appropriate fee has been determined and the balance waived or, if the waiver has been denied, the proper fee is submitted after notice of denial.

§86.910–93 Deficiencies.

(a) Any filing pursuant to §86.909 of this subpart that is not accompanied by the appropriate filing fee is deficient.

(b) The Administrator will inform any person who submits a deficient filing that:

(1) Such filing will be rejected and the amount paid refunded, unless the appropriate fee is submitted within a specified time;

(2) EPA will not process any filing that is deficient under this section; and

(3) The date of filing will be deemed the date on which EPA receives the appropriate fee.

§86.911–93 Adjustments of fees.

(a) The fee schedule will be changed annually by the same percentage as the percent change in the CPI for all urban consumers.

(b) This annual change will occur within 60 days following release of the final estimates of the annual average for the CPI for all urban consumers by the Department of Labor.

(c) MVECP costs and fees will periodically be reviewed and changes will be made to the schedule as necessary.

(d) When automatic adjustments are made, based on the CPI, the new fee

will be published in the FEDERAL REGISTER as a final rule to become effective 30 days or more after publication, as specified in the final rule.

(e) When changes are made based on periodic reviews, the changes will be subject to public comment.

Subpart K—Selective Enforcement Auditing of New Heavy-Duty Engines, Heavy-Duty Vehicles, and Light-Duty Trucks

SOURCE: 45 FR 63772, Sept. 25, 1980, unless otherwise noted.

§ 86.1001–84 Applicability.

The provisions of this subpart are applicable for 1984 and later model year heavy-duty engines and light-duty trucks.

(a) *Section numbering; construction.* (1) The model year of initial applicability is indicated by the two digits following the hyphen of the section number. A section remains in effect for subsequent model years until it is superseded.

(2) A section reference without a model year suffix shall be interpreted to be a reference to the section applicable to the appropriate model year.

(b) [Reserved]

[54 FR 14559, Apr. 11, 1989, as amended at 62 FR 31238, June 6, 1997]

§ 86.1002–84 Definitions.

(a) The definitions in this section apply to this subpart.

(b) As used in this subpart, all terms not defined herein have the meaning given them in the Act.

Acceptable Quality Level (AQL) means the maximum percentage of failing engines or vehicles, that for purposes of sampling inspection, can be considered satisfactory as a process average.

Configuration means a subclassification, if any, of a heavy-duty engine family for which a separate projected sales figure is listed in the manufacturer's Application for Certification and which can be described on the basis of emission control system, governed speed, injector size, engine calibration, and other parameters which may be designated by the Administrator, or a subclassification of a light-duty truck engine family/emission control system combination on the basis of engine code, inertia weight class, transmission type and gear ratios, axle ratio, and other parameters which may be designated by the Administrator.

Compliance level means an emission level determined during a Production Compliance Audit pursuant to subpart L of this part.

Test Sample means the collection of vehicles or engines of the same configuration which have been drawn from the population of engines or vehicles of that configuration and which will receive exhaust emission testing.

Inspection Criteria means the pass and fail numbers associated with a particular sampling plan.

Test Engine means an engine in a test sample.

Test Vehicle means a vehicle in a test sample.

[45 FR 63772, Sept. 25, 1980, as amended at 48 FR 52207, Nov. 16, 1983; 50 FR 35386, Aug. 30, 1985]

§ 86.1002–97 Definitions.

(a) The definitions in this section apply to this subpart.

(b) As used in this subpart, all terms not defined in this section have the meaning given them in the Act.

Acceptable quality level (AQL) means the maximum percentage of failing engines or vehicles, that for purposes of sampling inspection, can be considered satisfactory as a process average.

Axle ratio means all ratios within ±3% of the axle ratio specified in the configuration in the test order.

Compliance level means an emission level determined during a Production Compliance Audit pursuant to subpart L of this part.

Configuration means a subclassification, if any, of a heavy-duty engine family for which a separate projected sales figure is listed in the manufacturer's Application for Certification and which can be described on the basis of emission control system, governed speed, injector size, engine calibration, and other parameters which may be designated by the Administrator, or a subclassification of a light-duty truck engine family/emission control system combination on the basis of engine

code, inertia weight class, transmission type and gear rations, axle ratio, and other parameters which may be designated by the Administrator.

Executive Officer means the Executive Officer of the California Air Resources Board or his or her authorized representative.

Executive Order means the document the Executive Officer grants a manufacturer for an engine family that certifies the manufacturer has verified the engine family complies with all applicable standards and requirements pursuant to Title 13 of the California Code of Regulations.

50-state engine family means an engine family that meets both federal and California Air Resources Board motor vehicle emission control regulations and has received a federal certificate of conformity as well as an Executive Order.

Inspection criteria means the pass and fail numbers associated with a particular sampling plan.

Test engine means an engine in a test sample.

Test sample means the collection of vehicles or engines of the same configuration which have been drawn from the population of engines or vehicles of that configuration and which will receive exhaust emission testing.

Test vehicle means a vehicle in a test sample.

[62 FR 31238, June 6, 1997]

§86.1002–2001 Definitions.

(a) The definitions in this section apply to this subpart.

(b) As used in this subpart, all terms not defined in this section have the meaning given them in the Act.

(1) *Acceptable quality level* (AQL) means the maximum percentage of failing engines or vehicles, that for purposes of sampling inspection, can be considered satisfactory as a process average.

(2) *Compliance level* means an emission level determined during a Production Compliance Audit pursuant to subpart L of this part.

(3) *Configuration* means a subclassification, if any, of a heavy-duty engine family for which a separate projected sales figure is listed in the manufacturer's Application for Certification and which can be described on the basis of emission control system, governed speed, injector size, engine calibration and other parameters which may be designated by the Administrator, or for light-duty trucks a subclassification of a light-duty truck engine family/emission control system combination on the basis of engine code, inertia weight class, transmission type and gear ratios, axle ratio, and other parameters which may be designated by the Administrator and/or a subclassification of a light-duty truck evaporative/refueling emission family/emission control system.

(4) *Test sample* means the collection of vehicles or engines of the same configuration which have been drawn from the population of vehicles or engines of that configuration and which will receive emission testing.

(5) *Inspection criteria* means the pass and fail numbers associated with a particular sampling plan.

(6) *Test engine* means an engine in a test sample.

(7) *Test vehicle* means a vehicle in a test sample.

(8) *Axle ratio* means all ratios within ±3% of the axle ratio specified in the configuration in the test order.

(9) *Executive Officer* means the Executive Officer of the California Air Resources Board or his or her authorized representative.

(10) *Executive Order* means the document the Executive Officer grants a manufacturer for an engine family that certifies the manufacturer has verified the engine family complies with all applicable standards and requirements pursuant to Title 13 of the California Code of Regulations.

(11) *50-state engine family* means an engine family that meets both federal and California Air Resources Board motor vehicle emission control regulations and has received a federal certificate of conformity as well as an Executive Order.

[59 FR 16304, Apr. 6, 1994, as amended at 62 FR 31238, June 6, 1997]

§86.1003–90 Test orders.

(a) The Administrator shall require any testing under this subpart by means of a test order addressed to the manufacturer.

(b) The test order will be signed by the Assistant Administrator for Air and Radiation or his designee. The test order will be delivered in person by an EPA Enforcement Officer to a company representative or sent by registered mail, return receipt requested, to the manufacturer's representative who signs the Application for Certification submitted by the manufacturer pursuant to the requirements of this applicable section of subpart A of this part. Upon receipt of a test order, the manufacturer shall comply with all of the provisions of this subpart and instructions in the test order.

(c)(1) The test order will specify the engine or vehicle configuration selected for testing, the manufacturer's vehicle or engine assembly plant or associated storage facility from which the engines or vehicles must be selected, the time and location at which engines or vehicles must be selected, and the procedure by which engines or vehicles of the specified configuration must be selected. The test order may specify the number of vehicles or engines to be selected per day.

(i) If the total production of the specified vehicle configuration is less than the number specified in the test order, the manufacturer will select the actual number of vehicles produced per day.

(ii) Heavy-duty engine manufacturers will be required to select a minimum of four engines per day unless an alternate selection procedure is approved pursuant to § 86.1007–84(a) or unless total production of the specified configuration is less than four engines per day. If total production of the specified configuration is less than four engines per day, the manufacturer will select the actual number of engines produced that day.

(2) The test order may include alternative configurations to be selected for testing in the event that engines or vehicles of the specified configuration are not available for testing because those engines or vehicles are not being manufactured during the specified time, or not being stored at the specified assembly plant or associated storage facilities.

(3) If the specified configuration is not being manufactured at a rate of at least four vehicles per day, in the case of light-duty truck manufacturers, two engines per day, in the case of heavy-duty engine manufacturers specified in paragraph (g)(1) of § 86.1008–84 or one engine per day, in the case of heavy-duty engine manufacturers specified in paragraph (g)(2) of § 86.1008–90, over the expected duration of the audit, the Assistant Administrator or his designated representative may select engines or vehicles of the alternate configuration for testing.

(4) In addition, the test order may include other directions or information essential to the administration of the required testing.

(d) A manufacturer may submit a list of engine families and the corresponding assembly plants or associated storage facilities from which the manufacturer prefers to have engines or vehicles selected for testing or response to a test order. In order that a manufacturer's preferred location be considered for inclusion in a test order for a configuration of a particular engine family, the list must be submitted prior to issuance of the test order. Notwithstanding the fact that a manufacturer has submitted the above list, the Administrator may order selection at other than a preferred location.

(e) Upon receipt of a test order, a manufacturer shall proceed in accordance with the provisions of this subpart.

(f)(1) During a given model year, the Administrator shall not issue to a manufacturer more Selective Enforcement Audit (SEA) test orders than an annual limit determined by the following:

(i) For manufacturers of heavy-duty engines, either petroleum-fueled or methanol-fueled, the number determined by dividing the projected heavy-duty engine sales bound for the United States market for that year, as made by the manufacturer in its Application for Certification, by 30,000 and rounding to the nearest whole number, unless the projected sales are less than 15,000, in which case the number is one;

(ii) For manufacturers of petroleum-fueled or methanol-fueled light-duty trucks, the number determined by dividing the projected light-duty truck sales bound for the United States market for that model year, as made by

the manufacturer in its report submitted under paragraph (a)(2) of §600.207–80 of the Automobile Fuel Economy Regulations, by 300,000 and rounding to the nearest whole number, unless the projected sales are less than 150,000, in which case the number is one.

(iii) If a manufacturer submits to EPA in writing prior to or during the model year a reliable sales projection update, that update will be used for recalculating the manufacturer's annual limit of SEA test orders.

(2) Any SEA test order for which the configuration fails in accordance with §86.1010 or for which testing is not completed will not be counted against the annual limit.

(3) When the annual limit has been met, the Administrator may issue additional test orders for those configurations for which evidence exists indicating noncompliance. An SEA test order issued on this basis will include a statement as to the reason for its issuance.

[54 FR 14559, Apr. 11, 1989]

§86.1003–97 Test orders.

Section 86.1003–97 includes text that specifies requirements that differ from those specified in §86.1003–90. Where a paragraph in §86.1003–90 is identical and applicable to §86.1003–97, this may be indicated by specifying the corresponding paragraph and the statement ''[Reserved]. For guidance see §86.1003–90.''

(a) through (f) [Reserved]. For guidance see §86.1003–90.

(g) In the event evidence exists indicating an engine family is in noncompliance, the Administrator may, in addition to other powers provided by this section, issue a test order specifying the engine family the manufacturer is required to test.

[62 FR 31238, June 6, 1997]

§86.1003–2001 Test orders.

Section 86.1003–2001 includes text that specifies requirements that differ from §86.1003–88. Where a paragraph in §86.1003–88 is identical and applicable to §86.1003–2001, this may be indicated by specifying the corresponding paragraph and the statement ''[Reserved]. For guidance see §86.1003–88.'' Where a corresponding paragraph of §86.1003–88 is not applicable, this is indicated by the statement ''[Reserved].''.

(a) through (c)(1)(ii) [Reserved]. For guidance see §86.1003–88.

(c)(1)(iii) Heavy-duty vehicle manufacturers will be required to select a minimum of four vehicles per day unless an alternate selection procedure is approved pursuant to §86.1007–84(a) or unless total production of the specified configuration is less than four vehicles per day. If total production of the specified configuration is less than four vehicles per day, the manufacturer will select the actual number of vehicles produced per day.

(2) The test order may include alternative configurations to be selected for testing in the event that engines or vehicles of the specified configuration are not available for testing because those engines or vehicles are not being manufactured during the specified time, or not being stored at the specified assembly plant or associated storage facilities.

(3) If the specified configuration is not being manufactured at a rate of at least four vehicles per day, in the case of light-duty truck manufacturers, two heavy-duty engines or heavy-duty vehicles, in the case of heavy-duty vehicle and heavy-duty engine manufacturers specified in §86.1008–2001(g)(1), or one engine or heavy-duty vehicle per day, in the case of heavy-duty vehicle or engine manufacturers specified in §86.1008–2001(g)(2), over the expected duration of the audit, the Assistant Administrator or a designated representative may select engines or vehicles of an alternate configuration for testing.

(4) In addition, the test order may include other directions or information essential to the administration of the required testing.

(d) A manufacturer may submit a list of engine families and, if applicable, evaporative/refueling families and the corresponding assembly plants or associated storage facilities from which the manufacturer prefers to have engines or vehicles selected for testing in response to a test order. In order that a manufacturer's preferred location be considered for inclusion in a test order

for a configuration of a particular engine family and/or evaporative/refueling family, the list must be submitted prior to issuance of the test order. Notwithstanding the fact that a manufacturer has submitted the above list, the Administrator may, upon making the determination that evidence exists indicating noncompliance at other than the manufacturer's preferred plant, order testing at such other plant where vehicles of the configuration specified in the test order are assembled.

(e) Upon receipt of a test order, a manufacturer shall proceed in accordance with the provisions of this subpart.

(f)(1) During a given model year, the Administrator shall not issue to a manufacturer more Selective Enforcement Auditing (SEA) test orders than the annual limit determined by the following:

(i) For manufacturers of heavy-duty engines or vehicles, either gasoline-fueled or diesel, the number determined by dividing the projected sales bound for the United States market for that year, as made by the manufacturer in its Application for Certification, by 30,000 and rounded to the nearest whole number, unless the projected sales are less than 15,000, in which case the number is one;

(f)(1)(ii) through (f)(3) [Reserved]. For guidance see § 86.1003–88.

(g) In the event evidence exists indicating an engine family is in noncompliance, the Administrator may, in addition to other powers provided by this section, issue a test order specifying the engine family the manufacturer is required to test.

[59 FR 16305, Apr. 6, 1994, as amended at 62 FR 31238, June 6, 1997]

§ 86.1004–84 Testing by the Administrator.

(a) The Administrator may require by test order that engines or vehicles of a specified configuration be selected in a manner consistent with the requirements of § 86.1007–84 and submitted to him at such place as he may designate for the purpose of conducting emission tests. These tests will be conducted in accordance with § 86.1008–84 of these regulations to determine whether engines or vehicles manufactured by the manufacturer conform with the regulations with respect to which the certificate of conformity was issued.

(b)(1) Whenever the Administrator conducts a test on a test engine or vehicle or the Administrator and manufacturer each conduct a test on the same test engine or vehicle, the results of the Administrator's test will comprise the official data for that engine or vehicle.

(2) Whenever the manufacturer conducts all tests on a test engine or vehicle, the manufacturer's test data will be accepted as the official data: *Provided*, That if the Administrator makes a determination based on testing under paragraph (a) of this section that there is a substantial lack of agreement between the manufacturer's test results and the Administrator's test results, no manufacturer's test data from the manufacturer's test facility will be accepted for purposes of this subpart.

(c) If testing conducted under paragraph (a) of this section demonstrates a lack of agreement under paragraph (b)(2) of this section, the Administrator shall:

(1) Notify the manufacturer in writing of his determination that the test facility is inappropriate for conducting the tests required by this subpart and the reasons therefor; and

(2) Reinstate any manufacturer's data upon a showing by the manufacturer that the data acquired under paragraph (a) of this section was erroneous and the manufacturer's data was correct.

(d) The manufacturer may request in writing that the Administrator reconsider his determination in paragraph (b)(2) of this section based on data or information which indicates that changes have been made to the test facility and these changes have resolved the reasons for disqualification.

§ 86.1005–90 Maintenance of records; submittal of information.

(a) The manufacturer of any new petroleum-fueled or methanol-fueled heavy-duty engine or light-duty truck subject to any of the provisions of this subpart shall establish, maintain, and retain the following adequately organized and indexed records:

(1) *General records.* A description of all equipment used to test engines or vehicles in accordance with § 86.1008 pursuant to a test order issued under this subpart, specifically:

(i) If testing heavy-duty gasoline-fueled or methanol-fueled Otto-cycle engines, the equipment requirements specified in §§ 86.1306 and 86.1506 of this part;

(ii) If testing heavy-duty petroleum-fueled or methanol-fueled diesel engines, the equipment requirements specified in §§ 86.1306–84, 86.884–8, and 86.884–9 of this part;

(iii) If testing gasoline-fueled or methanol-fueled Ottocycle light-duty trucks, the equipment requirements specified in § 86.106 (excluding all references to evaporative and particulate emission testing), § 86.206, and § 86.1506–84 of this subpart; and

(iv) If testing petroleum-fueled or methanol-fueled diesel light-duty trucks, the equipment requirements specified in §§ 86.106 (excluding all references to evaporative emission testing) and 86.1506–83 of this part.

(2) *Individual records.* These records pertain to each audit conducted pursuant to this subpart.

(i) The date, time, and location of each test;

(ii) The number of hours of service accumulated on each engine or the number of miles on the vehicle when the test began and ended;

(iii) The names of all supervisory personnel involved in the conduct of the audit;

(iv) A record and description of any repairs performed prior to and/or subsequent to approval by the Administrator, giving the date and time of the repair, the reason for it, the person authorizing it, and the names of all supervisory personnel responsible for the conduct of the repair;

(v) The date when the engine or vehicle was shipped from the assembly plant or associated storage facility and when it was received at the testing facility;

(vi) A complete record of all emission tests performed pursuant to this subpart (except tests performed by EPA directly), including all individual worksheets and/or other documentation relating to each test, or exact copies thereof, specifically

(A) If testing gasoline-fueled or methanol-fueled Otto-cycle heavy-duty engines, the record requirements specified in §§ 86.1342 and 86.1542 of this part;

(B) If testing petroleum-fueled or methanol-fueled diesel heavy-duty engines, the record requirements specified in §§ 86.1342, 86.1542, and 86.884–10;

(C) If testing gasoline-fueled or methanol-fueled Ottocycle light-duty trucks, the record requirements specified in § 86.142 (excluding all references to diesel vehicles), § 86.242, and § 86.1542; and

(D) If testing petroleum-fueled or methanol-fueled diesel light-duty trucks, the record requirements specified in § 86.142; and

(vii) A brief description of any significant audit events commencing with the test engine or vehicle selection process, but not described by any subparagraph under paragraph (a)(2) of this section, including such extraordinary events as engine damage during shipment or vehicle accident.

(viii) A paper copy of the driver's trace for each test.

(3) The manufacturer shall record test equipment description, pursuant to paragraph (a)(1) of this section, for each test cell that can be used to perform emission testing under this subpart.

(b) The manufacturer shall retain all records required to be maintained under this subpart for a period of one (1) year after completion of all testing in response to a test order. Records may be retained as hard copy or reduced to microfilm, punch cards, etc., depending upon the manufacturer's record retention procedure: *Provided,* that in every case all information contained in the hard copy is retained.

(c) Pursuant to a request made by the Administrator, the manufacturer shall submit to him the following information with regard to engine or vehicle production:

(1) Number of engines or vehicles, by configuration and assembly plant, scheduled for production for the time period designated in the request.

(2) Number of engines or vehicles, by configuration and assembly plan, produced during the time period designated in the request which are complete form introduction into commerce.

(d) Nothing in this section limits the Administrator's discretion in requiring the manufacturer to retain additional records or submit information not specifically required by this section.

(e) The manufacturer shall address all reports, submissions, notifications, and requests for approvals made under this subpart to: Director, Manufacturers Operations Division, U.S. Environmental Protection Agency, EN–340, 401 M Street, SW., Washington, DC 20460.

[54 FR 14560, Apr. 11, 1989, as amended at 57 FR 31922, July 17, 1992]

§ 86.1006–84 Entry and access.

(a) To allow the Administrator to determine whether a manufacturer is complying with the provisions of this subpart and a test order issued thereunder, EPA Enforcement Officers are authorized to enter during operating hours and upon presentation of credentials any of the following:

(1) Any facility where any engine or vehicle to be introduced into commerce or any emission related component is manufactured, assembled, or stored;

(2) Any facility where any tests conducted pursuant to a test order or any procedures or activities connected with these tests are or were performed;

(3) Any facility where any engine or vehicle which is being tested, was tested, or will be tested is present; and

(4) Any facility where any record or other document relating to any of the above is located.

(b) Upon admission to any facility referred to in paragraph (a) of this section, EPA Enforcement Officers are authorized to perform the following inspection-related activities:

(1) To inspect and monitor any aspects of engine or vehicle manufacture, assembly, storage, testing and other procedures, and the facilities in which these procedures are conducted;

(2) To inspect and monitor any aspect of engine or vehicle test procedures or activities, including, but not limited to, monitoring engine or vehicle selection, preparation, service or mileage accumulation, preconditioning, emission test cycles, and maintenance; and to verify calibration of test equipment;

(3) To inspect and make copies of any records or documents related to the assembly, storage, selection and testing of an engine or vehicle in compliance with a test order; and

(4) To inspect and photograph any part or aspect of any engine or vehicle and any component used in the assembly thereof that is reasonably related to the purpose of the entry.

(c) EPA Enforcement Officers are authorized to obtain reasonable assistance without cost from those in charge of a facility to help them perform any function listed in this subpart and are authorized to request the recipient of a test order to make arrangements with those in charge of a facility operated for its benefit to furnish reasonable assistance without cost to EPA whether or not the recipient controls the facility.

(d) EPA Enforcement Officers are authorized to seek a warrant or court order authorizing the EPA Enforcement Officers to conduct activities related to entry and access as authorized in this section, as appropriate, to execute the functions specified in this section. EPA Enforcement Officers may proceed *ex parte* to obtain a warrant whether or not the Enforcement Officers first attempted to seek permission of the recipient of the test order or the party in charge of the facilities in question to conduct activities related to entry and access as authorized in this section.

(e) A recipient of a test order shall permit EPA Enforcement Officers who present a warrant or court order as described in paragraph (d) of this section to conduct activities related to entry and access as authorized in this section and as described in the warrant or court order. The recipient shall cause those in charge of its facility or a facility operated for its benefit to permit EPA Enforcement Officers to conduct activities related to entry and access as authorized in this section pursuant to a warrant or court order whether or not the recipient controls the facility. In the absence of such a warrant or court order, EPA Enforcement Officers may conduct activities related to entry

and access as authorized in this section only upon the consent of the recipient of the test order or the party in charge of the facilities in question.

(f) It is not a violation of this part or the Clean Air Act for any person to refuse to permit EPA Enforcement Officers to conduct activities related to entry and access as authorized in this section without a warrant or court order.

(g) A manufacturer is responsible for locating its foreign testing and manufacturing facilities in jurisdictions in which local foreign law does not prohibit EPA Enforcement Officers from conducting the entry and access activities specified in this section. EPA will not attempt to make any inspections which it has been informed that local foreign law prohibits.

(h) For purposes of this section, the following definitions are applicable:

(1) *Presentation of Credentials* means display of the document designating a person as an EPA Enforcement Officer.

(2) Where engine or vehicle storage areas or facilities are concerned, *operating hours* means all times during which personnel other than custodial personnel are at work in the vicinity of the area or facility and have access to it.

(3) Where facilities or areas other than those covered by paragraph (h)(2) of this section are concerned, *operating hours* means all times during which an assembly line is in operation, engine or vehicle assembly is taking place, testing, repair, service accumulation, production or compilation of records is taking place, or any other procedure or activity related to engine or vehicle manufacture, assembly or testing is being carried out in a facility.

(4) *Reasonable assistance* includes, but is not limited to, clerical, copying, interpreting and translating services, and the making available on an EPA Enforcement Officer's request of personnel of the facility being inspected during their working hours to inform the EPA Enforcement Officer of how the facility operates and to answer his or her questions. Any employee whom an EPA Enforcement Officer requests the manufacturer to cause to appear for questioning will be entitled to be accompanied, represented and advised by counsel.

[45 FR 63772, Sept. 25, 1980, as amended at 48 FR 52208, Nov. 16, 1983]

§86.1007–84 Sample selection.

(a) Engines or vehicles comprising a test sample which are required to be tested, pursuant to a test order issued in accordance with this subpart, will be selected at the location and in the manner specified in the test order. If a manufacturer determines that the test engines or vehicles cannot be selected in the manner specified in the test order, an alternative selection procedure may be employed: *Provided,* That the manufacturer requests approval of the alternative procedure in advance of the start of test sample selection and that the Administrator approves the procedure.

(b) The manufacturer shall have assembled the test engines or vehicles of the configuration selected for testing using its normal mass production process for engines or vehicles to be distributed into commerce. During the audit, the manufacturer shall inform the Administrator of any change(s) implemented in its production processes, including quality control, which may reasonably be expected to affect the emissions of the vehicles or engines selected, between the time the manufacturer is notified of a test order and the time the manufacturer finishes selecting test vehicles or engines. In the case of heavy-duty engines, if the test engines are selected at a location where they do not have their operational and emission control systems installed, the test order will specify the manner and location for selection of components to complete assembly of the engines. The manufacturer shall assemble these components onto the test engines using normal assembly and quality control procedures as documented by the manufacturer.

(c) No quality control, testing, or assembly procedures will be used on the completed test engine or vehicle or any portion thereof, including parts and subassemblies, that has not been or will not be used during the production and assembly of all other engines or vehicles of that configuration, except, that the Administrator may approve a

modification in the normal assembly procedures pursuant to paragraph (b) of this section.

(d) The test order may specify that EPA Enforcement Officers, rather than the manufacturer, will select the test engines or vehicles according to the method specified in the test order.

(e) The order in which test engines or vehicles are selected determines the order in which test results are to be used in applying the sampling plan in accordance with § 86.1010–84.

(f) The manufacturer shall keep on hand all untested engines or vehicles, if any, comprising the test sample until such time as a pass or fail decision is reached in accordance with § 86.1010–84(d). The manufacturer may ship any tested engine or vehicle which has not failed in accordance with § 86.1010–84(b). However, once the manufacturer ships any test engine or vehicle, it relinquishes the prerogative to conduct retests as provided in § 86.1008–84(i).

[45 FR 63772, Sept. 25, 1980, as amended at 48 FR 52208, Nov. 16, 1983]

§ 86.1008–90 Test procedures.

(a)(1)(i) For heavy-duty engines, the prescribed test procedure is the Federal Test Procedure, as described in subparts N, I, and P of this part.

(ii) For heavy-duty vehicles with a GVW of less than 14,000 pounds (6,400 kilograms), the prescribed test procedure is the Fuel Dispensing Spitback Test as described in 86.1246–96 of this part. The test for fuel spitback is conducted as a stand-alone test, thus all references to the test sequence described in figure M96–1 of subpart M of this part can be ignored.

(iii) During the testing of heavy-duty diesel engines, the manufacturer shall decide for each engine, prior to the start of the initial cold cycle, whether the measurement of background particulate is required for the cold and hot cycles to be valid. The manufacturer may choose to have different requirements for the cold and hot cycles. If a manufacturer chooses to require the measurement of background particulate, failure to measure background particulate shall void the test cycle regardless of the test results. If a test cycle is void, the manufacturer shall retest using the same validity requirements of the initial test.

(2) For light-duty trucks, the prescribed test procedure is the Federal Test Procedure as described in subparts B, P, and/or C of this part. The manufacturer shall not perform the evaporative emission test procedures contained in subpart B of this part. The Administrator may, based on advance application by a manufacturer, approve optional test procedures for use in Selective Enforcement Audit testing.

(3) When testing light-duty trucks the following exceptions to the test procedures in subpart B are applicable:

(i) For mileage accumulation, the manufacturer may use test fuel meeting the specifications of mileage and service accumulation fuels of § 86.113. Otherwise, the manufacturer may use fuels other than those specified in this section only with the advance approval of the Administrator.

(ii) The manufacturer may measure the temperature of the test fuel at other than the approximate mid-volume of the fuel tank, as specified in § 86.131–96(a) with only a single temperature sensor, and may drain the test fuel from other than the lowest point of the tank, as specified in § 86.131–96(b), provided an equivalent method is used. Equivalency documentation shall be maintained by the manufacturers and shall be made available to the Administrator upon request.

(iii) The manufacturer may perform additional preconditioning on SEA test vehicles other than the preconditioning specified in § 86.132 only if the additional preconditioning had been performed on certification test vehicles of the same configuration.

(iv) If the Administrator elects to use the evaporative canister preconditioning procedure described in § 86.132–96(k), the manufacturer shall perform the heat build procedure 11 to 34 hours following vehicle preconditioning rather than according to the time period specified in § 86.133–90(a). All references in § 86.133–90 to an evaporative emission enclosure (SHED) and analyzing for HC during the heat build can be ignored.

(v) The manufacturer may substitute slave tires for the drive wheel tires on the vehicle as specified in paragraph (e)

of § 86.135–90: *Provided*, that the slave tires are the same size.

(vi) If the Administrator elects to use the evaporative canister preconditioning procedure described in § 86.132–96(k), the cold start exhaust test described in § 86.137 shall follow the heat build procedure described in § 86.133–90 by not more than one hour.

(vii) In performing exhaust sample analysis under § 86.140.

(A) When testing diesel vehicles or methanol-fueled vehicles, the manufacturer shall allow a minimum of 20 minutes warm-up for the HC analyzer, and a minimum of 2 hours warm-up for the CO, CO_2 and NO_X analyzers. (Power is normally left on infrared and chemiluminescent analyzers. When not in use, the chopper motors of the infrared analyzers are turned off and the phototube high voltage supply to the chemiluminescent analyzers is placed in the standby position.)

(B) The manufacturer shall exercise care to prevent moisture from condensing in the sample collection bags.

(viii) The manufacturer need not comply with § 86.142, since the records required therein are provided under other provisions of subpart K of this part.

(ix) In addition to the requirements of subpart B of this part, the manufacturer shall prepare gasoline-fueled vehicles and methanol-fueled vehicles as follows prior to exhaust emission testing:

(A) The manufacturer shall inspect the fuel system to insure the absence of any leaks of liquid or vapor to the atmosphere by applying a pressure of 14.5 + 0.5 inches of water to the fuel system, allowing the pressure to stabilize, and isolating the fuel system from the pressure source. Following isolation of the fuel system, pressure must not drop more than 2.0 inches of water in five minutes. If required, the manufacturer shall perform corrective action in accordance with § 86.1008 and report this action in accordance with § 86.1009.

(B) When performing this pressure check, the manufacturer shall exercise care to neither purge nor load the evaporative emission control system.

(C) The manufacturer shall not modify the test vehicle's evaporative emission control system by component addition, deletion, or substitution, except to comply with paragraph (a)(4)(ii) of this section if approved in advance by the Administrator.

(4) The Administrator, may on the basis of a written application by a manufacturer, prescribe minor test procedure variations from those set forth in paragraphs (a)(1) and (a)(2) of this section for any heavy-duty engine.

(5) When testing light-duty trucks, the following exceptions to the test procedures in subpart C of this part are applicable:

(i) The manufacturer may measure the temperature of the test fuel at other than the approximate mid-volume of the fuel tank as specified in § 86.231(a) and may drain the test fuel from other than the lowest point of the fuel tank as specified in § 86.231(b) provided an equivalent method is used. Equivalency documentation shall be maintained by the manufacturer and shall be made available to the Administrator upon request.

(ii) In performing exhaust sample analysis under § 86.240, the manufacturer shall exercise care to prevent moisture from condensing in the sample collection bags.

(iii) The manufacturer need not comply with § 86.242 since the records required therein are provided under other provisions of subpart K of this part.

(iv) In addition to the requirements of subpart C of this part, the manufacturer shall prepare gasoline-fueled vehicles as follows prior to exhaust emission testing.

(A) The manufacturer shall inspect the fuel system to ensure the absence of any leaks of liquid or vapor to the atmosphere by applying a pressure of 14.5±0.5 inches of water (3.6±0.1 kPa) in the fuel system allowing the pressure to stabilize and isolating the fuel system from the pressure sources. Following isolation of the fuel system, pressure must not drop more than 2.0 inches of water (0.5 kPa) in 5 minutes. If required, the manufacturer shall perform corrective action in accordance with paragraph § 86.1008(d) and report this action in accordance with paragraph § 86.1009(d).

(B) When performing this pressure check, the manufacturer shall exercise

care to neither purge nor load the evaporative emission control system.

(C) The manufacturer shall not modify the test vehicle's evaporative emission control system by component addition, deletion, or substitution, except if approved in advance by the Administrator to comply with paragraph (a)(5)(i) of this section.

(b)(1) The manufacturer shall not adjust, repair, prepare, or modify the engines or vehicles selected for testing and shall not perform any emission tests on engines or vehicles selected for testing and shall not perform any emission tests on engines or vehicles selected for testing pursuant to the test order unless this adjustment, repair, preparation, modification, and/or tests are documented in the manufacturer's engine or vehicle assembly and inspection procedures and are actually performed or unless these adjustments and/or test are required or permitted under this subpart or are approved in advance by the Administrator.

(2) For 1984 and later model years the Administrator may adjust or cause to be adjusted any engine parameter which the Administrator has determined to be subject to adjustment for certification, Selective Enforcement Audit, and Production Compliance Audit testing in accordance with § 86.090–22(e)(1), to any setting within the physically adjustable range of that parameter, as determined by the Administrator in accordance with § 86.090–22(e)(3)(ii), prior to the performance of any tests. However, if the idle speed parameter is one which the Administrator has determined to be subject to adjustment, the Administrator shall not adjust it to any setting which causes a lower engine idle speed than would have been possible within the physically adjustable range of the idle speed parameter if the manufacturer had accumulated 125 hours of service on the engine or 4,000 miles on the vehicle under paragraph (c) of this section, all other parameters being identically adjusted for the purpose of the comparison. The manufacturer may be requested to supply information to establish such an alternative minimum idle speed. The Administrator, in making or specifying these adjustments, may consider the effect of the deviation from the manufacturer's recommended setting on emissions performance characteristics as well as the likelihood that similar settings will occur on in-use heavy-duty engines or light-duty trucks. In determining likelihood, the Administrator may consider factors such as, but not limited to, the effect of the adjustment on engine or vehicle performance characteristics and surveillance information from similar in-use engines or vehicles.

(c) Prior to performing exhaust emission testing on an SEA test engine, the manufacturer may accumulate on each engine a number of hours of service equal to the greater of 125 hours or the number of hours the manufacturer accumulated during certification on the emission-data engine corresponding to the configuration specified in the test order. Prior to performing exhaust emission testing on an SEA test vehicle, the manufacturer may accumulate a number of miles equal to the greater of 4,000 miles or the number of miles the manufacturer accumulated during certification on the emission data vehicle corresponding to the configuration specified in the test order.

(1) Service or mileage accumulation must be performed in a manner using good engineering judgment to obtain emission results representative of normal production vehicles. This service or mileage accumulation must be consistent with the new vehicle break-in instructions contained in the applicable vehicle owner's manual, if any.

(2) The manufacturer shall accumulate service at a minimum rate of 16 hours per engine or mileage at a minimum rate of 300 miles per vehicle during each 24-hour period, unless otherwise provided by the Administrator.

(i) The first 24 hour period for service or mileage accumulation shall begin as soon as authorization checks, inspections and preparations are completed on each engine or vehicle.

(ii) The minimum service or mileage accumulation rate does not apply on weekends or holidays.

(iii) If the manufacturer's service or mileage accumulation target is less than the minimum rate specified (16 hours or 300 miles per day), then the minimum daily accumulation rate shall be equal to the manufacturer's

service or mileage accumulation target.

(3) Service or mileage accumulation shall be completed on a sufficient number of test engines or vehicles during consecutive 24-hour periods to assure that the number of engines or vehicles tested per day fulfills the requirements of paragraph (g) of this section.

(d) The manufacturer shall not perform any maintenance on test vehicles or engines after selection for testing, nor shall the Administrator allow deletion of any test vehicle or engine from the test sequence, unless requested by the manufacturer, and approved by the Administrator before any test vehicle or engine maintenance or deletion.

(e) The manufacturer shall expeditiously ship test engines or vehicles from the point of selection to the test facility. If the test facility is not located at or in close proximity to the point of selection, the manufacturer shall assure that test engines or vehicles arrive at the test facility within 24 hours of selection: *Except*, that the Administrator may approve more time based upon a request by the manufacturer accompanied by a satisfactory justification.

(f) If an engine or vehicle cannot complete the service or mileage accumulation or emission test because of a malfunction, the manufacturer may request that the Administrator authorize the repair of that engine or vehicle or its deletion from the test sequence.

(g) Whenever a manufacturer conducts testing pursuant to a test order issued under this subpart, the manufacturer shall notify the Administrator within one working day of receipt of the test order which test facility will be used to comply with the test order. If no test cells are available at a desired facility, the manufacturer must provide alternate testing capability satisfactory to the Administrator.

(1) Heavy-duty engine manufacturers with projected sales for the United States market for that year of 30,000 or greater shall complete emission testing at their facility on a minimum of two engines per 24-hour period, including each voided test and each diesel engine smoke test.

(2) Heavy-duty engine manufacturers with projected sales for the United States market for that year of less than 30,000 shall complete emission testing at their facility on a minimum of one engine per 24-hour period, including each voided test and each diesel engine smoke test.

(3) Light-duty truck manufacturers shall complete emission testing at their facility on a minimum of four engines per 24-hour period, including each voided test.

(4) The Administrator may approve a lower daily rate of conducting emission tests based upon a request by a satisfactory justification.

(h) The manufacturer shall perform test engine or vehicle selection, shipping, preparation, service or mileage accumulation, and testing in such a manner as to assure that the audit is performed in an expeditious manner.

(i) The manufacturer may retest any engines or vehicles tested during a Selective Enforcement Audit once a fail decision for the audit has been reached in accordance with §86.1010–84(d) based on the first test on each engine or vehicle: *Except*, that the Administrator may approve retesting at other times based upon a request by the manufacturer accompanied by a satisfactory justification. The manufacturer may test each engine or vehicle a total of three times. The manufacturer shall test each engine or vehicle the same number of times. The manufacturer may accumulate additional service or mileage before conducting a retest, subject to the provisions of paragraph (c) of this section.

[54 FR 14560, Apr. 11, 1989, as amended at 57 FR 31922, July 17, 1992; 58 FR 16046, Mar. 24, 1993; 62 FR 47123, Sept. 5, 1997]

§86.1008–96 Test procedures.

Section 86.1008–96 includes text that specifies requirements that differ from §86.1008–90. Where a paragraph in §86.1008–90 is identical and applicable to §86.1008–96, this is indicated by specifying the corresponding paragraph and the statement ''[Reserved]. For guidance see §86.1008–90.'' Where a corresponding paragraph of §86.1008–90 is not applicable, this is indicated by the statement ''[Reserved].''

(a)(1)(i) For heavy-duty engines, the prescribed test procedure is the Federal

Test Procedure, as described in subparts N, I, and P of this part.

(ii) During the testing of heavy-duty diesel engines, the manufacturer shall decide for each engine, prior to the start of the initial cold cycle, whether the measurement of background particulate is required for the cold and hot cycles to be valid. The manufacturer may choose to have different requirements for the cold and hot cycles. If a manufacturer chooses to require the measurement of background particulate, failure to measure background particulate shall void the test cycle regardless of the test results. If a test cycle is void, the manufacturer shall retest using the same validity requirements of the initial test.

(2) For light-duty trucks, the prescribed test procedures are the FTP as described in subparts B, C, and P of this part and the CST as described in subpart O of this part. The manufacturer may not perform the evaporative emission test procedure contained in subpart B. The Administrator may, based on advance application by a manufacturer, approve optional test procedures for use in Selective Enforcement Audit Testing.

(3) [Reserved]. For guidance see § 86.1008–90.

(4) When testing light-duty trucks the following exception to the test procedures in subpart O of this part is applicable: manufacturer need not comply with § 86.1442, since the records required therein are provided under other provisions of subpart K of this part.

(ii) In addition to the requirements of subpart O of this part the manufacturer must prepare vehicles as described in paragraphs (a)(4)(ii) (A) through (C) of this section prior to exhaust emission testing.

(A) The manufacturer must inspect the fuel system to insure the absence of any leaks of liquid or vapor to the atmosphere by applying a pressure of 14.5 ± 0.5 inches of water to the fuel system, allowing the pressure to stabilize, and isolating the fuel system from the pressure source. Pressure must not drop more than 2.0 inches of water in five minutes. If required, the manufacturer performs corrective action in accordance with this section and must report this action in accordance with § 86.1009.

(B) When performing this pressure check, the manufacturer must exercise care to neither purge nor load the evaporative system.

(C) The manufacturer may not modify the test vehicle's evaporative emission control system by component addition, deletion, or substitution.

(5) [Reserved]. For guidance see § 86.1008–90.

(6) The Administrator may select and prescribe the sequence of any CSTs. Further, the Administrator may, on the basis of a written application by a manufacturer, prescribe minor test procedure variations from those set forth in paragraphs (a) (1) and (2) of this section for any heavy-duty engine or light-duty truck.

(b) through (i) [Reserved]. For guidance see § 86.1008–90.

[58 FR 58425, Nov. 1, 1993, as amended at 62 FR 47123, Sept. 5, 1997]

§ 86.1008–97 Test procedures.

Section 86.1008–97 includes text that specifies requirements that differ from those specified in §§ 86.1008–90 and 86.1008–96. Where a paragraph in § 86.1008–90 or § 86.1008–96 is identical and applicable to § 86.1008–97, this may be indicated by specifying the corresponding paragraph and the statement ''[Reserved]. For guidance see § 86.1008–90.'' or ''[Reserved]. For guidance see § 86.1008–96.''

(a)(1) [Reserved]. For guidance see § 86.1008–96.

(2) For light-duty trucks, the prescribed test procedures are the Federal Test Procedure, as described in subpart B and/or subpart R of this part, whichever is applicable, the idle CO test procedure as described in subpart P of this part, the cold temperature CO test procedure as described in subpart C of this part, and the Certification Short Test procedure as described in subpart O of this part. Where the manufacturer conducts testing based on the requirements specified in Chapter 1 or Chapter 2 of the California Regulatory Requirements Applicable to the National Low Emission Vehicle Program (October, 1996), the prescribed test procedures are the procedures cited in the previous

sentence, or substantially similar procedures, as determined by the Administrator. The California Regulatory Requirements Applicable to the National Low Emission Vehicle Program are incorporated by reference (see §86.1). For purposes of Selective Enforcement Audit testing, the manufacturer shall not be required to perform any of the test procedures in subpart B of this part relating to evaporative emission testing, except as specified in paragraph (a)(3) of this section. The Administrator may select and prescribe the sequence of any Certification Short Tests. Further, the Administrator may, on the basis of a written application by a manufacturer, approve optional test procedures other than those in subparts B, C, P, and O of this part for any motor vehicle which is not susceptible to satisfactory testing using the procedures in subparts B, C, P, and O of this part.

(3) When testing light-duty trucks the following exceptions to the test procedures in subpart B and/or subpart R of this part are applicable:

(i) For mileage accumulation, the manufacturer may use test fuel meeting the specifications for mileage and service accumulation fuels of §86.113–94, or, for vehicles certified to the National LEV standards, the specifications of §86.1771. Otherwise, the manufacturer may use fuels other than those specified in this section only with the advance approval of the Administrator.

(ii) [Reserved]. For guidance see §86.1008–90.

(iii) The manufacturer may perform additional preconditioning on Selective Enforcement Audit test vehicles other than the preconditioning specified in §86.132, or §86.1773 for vehicles certified to the National LEV standards, only if the additional preconditioning had been performed on certification test vehicles of the same configuration.

(a)(3)(iv) through (a)(3)(vii) [Reserved]. For guidance see §86.1008–90.

(a)(3)(viii) The manufacturer need not comply with §86.142 or §86.1775, since the records required therein are provided under other provisions of this subpart.

(a)(3)(ix) [Reserved]. For guidance see §86.1008–90.

(a)(4) [Reserved]. For guidance see §86.1008–96.

(5) [Reserved]. For guidance see §86.1008–90.

(6) [Reserved]. For guidance see §86.1008–96.

(b) through (i) [Reserved]. For guidance see §86.1008–90.

[62 FR 31238, June 6, 1997]

§86.1008–2001 Test procedures.

(a)(1)(i) For heavy-duty engines, the prescribed test procedure is the Federal Test Procedure as described in subparts N, I, and P of this part. The Administrator, may on the basis of a written application by a manufacturer, approve optional test procedures other than those in subparts N, I, and P of this part for any heavy-duty vehicle which is not susceptible to satisfactory testing using the procedures in subparts N, I, and P of this part.

(ii) For heavy-duty vehicles the prescribed test procedures are the Fuel Dispensing Spitback Test as described in §86.1246–96 (for HDVs with a GVW of less than 14,000 pounds (6,400 kilograms)); this test for fuel spitback is conducted as a stand alone test, thus all references to the test sequence described in figure M96–1 of subpart M of this part can be ignored. Further, the Administrator may, on the basis of a written application by a manufacturer, approve optional test procedures other than those in subpart M of this part for any heavy-duty vehicle which is not susceptible to satisfactory testing using the procedures in subpart M of this part.

(iii) During the testing of heavy-duty diesel engines, the manufacturer shall decide for each engine, prior to the start of the initial cold cycle, whether the measurement of background particulate is required for the cold and hot cycles to be valid. The manufacturer may choose to have different requirements for the cold and hot cycles. If a manufacturer chooses to require the measurement of background particulate, failure to measure background particulate shall void the test cycle regardless of the test results. If a test cycle is void, the manufacturer shall retest using the same validity requirements of the initial test.

(2) For light-duty trucks, the prescribed test procedures are the Federal Test Procedure as described in subpart B and/or subpart R of this part, whichever is applicable, the idle CO test procedure as described in subpart P of this part, the cold temperature CO test procedure as described in subpart C of this part, and the Certification Short Test procedure as described in subpart O of this part. For purposes of Selective Enforcement Audit Testing, the manufacturer shall not be required to perform any of the test procedures in subpart B of this part relating to evaporative emission testing, other than refueling emissions testing, except as specified in paragraph (a)(3) of this section. The Administrator may select and prescribe the sequence of any CSTs. Further, the Administrator may, on the basis of a written application by a manufacturer, approve optional test procedures other than those in subparts B, C, P, O, and R of this part for any motor vehicle which is not susceptible to satisfactory testing using the procedures in subparts B, C, P, O, and R of this part.

(3) When testing light-duty trucks, the following exceptions to the test procedures in subpart B and/or subpart R of this part are applicable to Selective Enforcement Audit testing:

(i) For mileage accumulation, the manufacturer may use test fuel meeting the specifications for mileage and service accumulation fuels of § 86.113, or, for vehicles certified to the National LEV standards, the specifications of § 86.1771. Otherwise, the manufacturer may use fuels other than those specified in this section only with the advance approval of the Administrator.

(ii) The manufacturer may measure the temperature of the test fuel at other than the approximate mid-volume of the fuel tank, as specified in § 86.131–96(a) with only a single temperature sensor, and may drain the test fuel from other than the lowest point of the tank, as specified in § 86.131–96(b) and § 86.152–98(a), provided an equivalent method is used. Equivalency documentation shall be maintained by the manufacturer and shall be made available upon request.

(iii) The manufacturer may perform additional preconditioning on SEA test vehicles other than the preconditioning specified in § 86.132, or § 86.1773 for vehicles certified to the National LEV standards, only if the additional preconditioning was performed on certification test vehicles of the same configuration.

(iv) If the Administrator elects to use the evaporative/refueling canister preconditioning procedure described in § 86.132–96(k), the manufacturer shall perform the heat build procedure 11 to 34 hours following vehicle preconditioning rather than according to the time period specified in § 86.133–90(a). All references to an evaporative emission enclosure and analyzing for HC during the heat build can be ignored.

(v) The manufacturer may substitute slave tires for the drive wheel tires on the vehicle as specified in paragraph § 86.135–90(e): *Provided*, that the slave tires are the same size.

(vi) If the Administrator elects to use the evaporative/refueling canister preconditioning procedure described in § 86.132–96(k), the cold start exhaust emission test described in § 86.137–96 shall follow the heat build procedure described in § 86.133–90 by not more than one hour.

(vii) In performing exhaust sample analysis under § 86.140–94.

(A) When testing diesel vehicles, or methanol-fueled Otto-cycle vehicles, the manufacturer shall allow a minimum of 20 minutes warm-up for the HC analyzer, and for diesel vehicles, a minimum of two hours warm-up for the CO, CO_2, and NO_X analyzers. (Power is normally left on infrared and chemiluminescent analyzers. When not in use, the chopper motors of the infrared analyzers are turned off and the phototube high voltage supply to the chemiluminescent analyzers is placed in the standby position.)

(B) The manufacturer shall exercise care to prevent moisture from condensing in the sample collection bags.

(viii) The manufacturer need not comply with § 86.142, § 86.155, or § 86.1775 since the records required therein are provided under other provisions of this subpart K.

(ix) If a manufacturer elects to perform the background determination procedure described in paragraph

(a)(3)(xi) of this section in addition to performing the refueling emissions test procedure, the elapsed time between the initial and final FID readings shall be recorded, rounded to the nearest second rather than minute as described in §86.154–98(e)(8). In addition, the vehicle soak described in §86.153–98(e) shall be conducted with the windows and luggage compartment of the vehicle open.

(x) The Administrator may elect to perform a seal test, described in §86.153–98(b), of both integrated and non-integrated systems instead of the full refueling test. When testing non-integrated systems, a manufacturer may conduct the canister purge described in §86.153–98(b)(1) directly following the preconditioning drive described in §86.132–96(e) or directly following the exhaust emissions test described in §86.137–96.

(xi) In addition to the refueling test, a manufacturer may elect to perform the following background emissions determination immediately prior to the refueling measurement procedure described in §86.154–98, provided EPA is notified of this decision prior to the start of testing in an SEA.

(A) The SHED shall be purged for several minutes immediately prior to the background determination. Warning: If at any time the concentration of hydrocarbons, of methanol, or of methanol and hydrocarbons exceeds 15,000 ppm C, the enclosure should be immediately purged. This concentration provides a 4:1 safety factor against the lean flammability limit.

(B) The FID (or HFID) hydrocarbon analyzer shall be zeroed and spanned immediately prior to the background determination. If not already on, the enclosure mixing fan and the spilled fuel mixing blower shall be turned on at this time.

(C) Place the vehicle in the SHED. The ambient temperature level encountered by the test vehicle during the entire background emissions determination shall be 80 °F ±3 °F. The windows and luggage compartment of the vehicle must be open and the gas cap must be secured.

(D) Seal the SHED. Immediately analyze the ambient concentration of hydrocarbons in the SHED and record. This is the initial background hydrocarbon concentration.

(E) Soak the vehicle for ten minutes ±1 minute.

(F) The FID (or HFID) hydrocarbon analyzer shall be zeroed and spanned immediately prior to the end of the background determination.

(G) Analyze the ambient concentration of hydrocarbons in the SHED and record. This is the final background hydrocarbon concentration.

(H) The total hydrocarbon mass emitted during the background determination is calculated according to §86.156–98. To obtain a per-minute background emission rate, divide the total hydrocarbon mass calculated in this paragraph by the duration of the soak, rounded to the nearest second, described in paragraph (a)(3)(xi)(G) of this section.

(I) The background emission rate is multiplied by the duration of the refueling measurement obtained in paragraph (a)(3)(ix) of this section. This number is then subtracted from the total grams of emissions calculated for the refueling test according to §86.156–98(a) to obtain the adjusted value for total refueling emissions. The final results for comparison with the refueling emission standard shall be computed by dividing the adjusted value for total refueling mass emissions by the total gallons of fuel dispensed in the refueling test as described in §86.156–98(b).

(xii) In addition to the requirements of subpart B of this part, the manufacturer shall prepare gasoline-fueled and methanol-fueled vehicles as follows prior to emission testing:

(A) The manufacturer shall inspect the fuel system to ensure the absence of any leaks of liquid or vapor to the atmosphere by applying a pressure of 14.5±0.5 inches of water (3.6±0.1 Kpa) to the fuel system allowing the pressure to stabilize and isolating the fuel system from the pressure source. Following isolation of the fuel system, pressure must not drop more than 2.0 inches of water (0.5 Kpa) in five minutes. If required, the manufacturer shall perform corrective action in accordance with paragraph (d) of this section and report this action in accordance with §86.1009–2001(d).

(B) When performing this pressure check, the manufacturer shall exercise care to neither purge nor load the evaporative or refueling emission control systems.

(C) The manufacturer may not modify the test vehicle's evaporative or refueling emission control systems by component addition, deletion, or substitution, except to comply with paragraph (a)(3)(ii) of this section if approved in advance by the Administrator.

(4) When testing light-duty trucks, the following exceptions to the test procedures in subpart C of this part are applicable to Selective Enforcement Audit testing:

(i) The manufacturer may measure the temperature of the test fuel at other than the approximate mid-volume of the fuel tank, as specified in § 86.131–90(a), and may drain the test fuel from other than the lowest point of the fuel tank as specified in § 86.131–90(b), provided an equivalent method is used. Equivalency documentation shall be maintained by the manufacturer and shall be made available to the Administrator upon request.

(ii) In performing exhaust sample analysis under § 86.140–94, the manufacturer shall exercise care to prevent moisture from condensing in the sample collection bags.

(iii) The manufacturer need not comply with § 86.142–90 since the records required therein are provided under other provisions of this subpart K.

(iv) In addition to the requirements of subpart C of this part, the manufacturer shall prepare gasoline-fueled vehicles as follows prior to exhaust emission testing:

(A) The manufacturer shall inspect the fuel system to ensure the absence of any leaks of liquid or vapor to the atmosphere by applying a pressure of 14.5±0.5 inches of water (3.6±0.1 Kpa) to the fuel system allowing the pressure to stabilize and isolating the fuel system from the pressure source. Following isolation of the fuel system, pressure must not drop more than 2.0 inches of water (0.5 Kpa) in five minutes. If required, the manufacturer shall perform corrective action in accordance with paragraph (d) of this section and report this action in accordance with § 86.1009–2001(d).

(B) When performing this pressure check, the manufacturer shall exercise care to neither purge nor load the evaporative or refueling emission control system.

(C) The manufacturer shall not modify the test vehicle's evaporative or refueling emission control system by component addition, deletion, or substitution, except if approved in advance by the Administrator, to comply with paragraph (a)(4)(ii) of this section.

(5) When testing light-duty trucks, the exceptions to the test procedures in subpart O of this part applicable to Selective Enforcement Audit testing are listed in paragraphs (a)(5) (i) and (ii) of this section.

(i) The manufacturer need not comply with § 86.1442, since the records required therein are provided under provisions of this subpart K.

(ii) In addition to the requirements of subpart O of this part, the manufacturer must prepare vehicles as in paragraphs (a)(5)(ii) (A) through (C) of this section prior to exhaust emission testing.

(A) The manufacturer must inspect the fuel system to insure the absence of any leaks of liquid or vapor to the atmosphere by applying a pressure of 14.5±0.5 inches of water (3.6±0.1 Kpa) to the fuel system, allowing the pressure to stabilize, and isolating the fuel system from the pressure source. Pressure must not drop more than 2.0 inches of water (0.5 Kpa) in five minutes. If required, the manufacturer performs corrective action in accordance with this section and must report this action in accordance with § 86.1009–2001.

(B) When performing this pressure check, the manufacturer must exercise care to neither purge nor load the evaporative or refueling emission control system.

(C) The manufacturer may not modify the test vehicle's evaporative or refueling emission control system by component addition, deletion, or substitution.

(b)(1) The manufacturer shall not adjust, repair, prepare, or modify the vehicles selected for testing and shall not perform any emission tests on vehicles selected for testing pursuant to the

test order unless this adjustment repair, preparation, modification, and/or tests are documented in the manufacturer's vehicle assembly and inspection procedures and are actually performed or unless these adjustments and/or tests are required or permitted under this subpart or are approved in advance by the Administrator.

(2) For 1984 and later model years the Administrator may adjust or cause to be adjusted any engine or vehicle parameter which the Administrator has determined to be subject to adjustment for certification, Selective Enforcement Audit testing, and Production Compliance Audit testing in accordance with §86.090–22(c)(1), to any setting within the physically adjustable range of that parameter, as determined by the Administrator in accordance with §86.090–22(e)(3)(ii), prior to the performance of any tests. However, if the idle speed parameter is one which the Administrator has determined to be subject to adjustment, the Administrator shall not adjust it to a setting which causes a lower engine idle speed than will be possible within the physically adjustable range of the idle speed parameter if the manufacturer had accumulated 125 hours of service on the engine or 4,000 miles on the vehicle under paragraph (c) of this section, all other parameters being identically adjusted for the purpose of comparison. The manufacturer may be requested to supply information to establish such an alternative minimum idle speed. The Administrator, in making or specifying such adjustments, will consider the effect of the deviation from the manufacturer's recommended setting on emissions performance characteristics as well as the likelihood that similar settings will occur on in-use heavy-duty engines or light-duty trucks. In determining likelihood, the Administrator will consider factors such as, but not limited to, the effect of the adjustment on engine or vehicle performance characteristics and surveillance information from similar in-use vehicles.

(c) Prior to performing emission testing on an SEA test engine, the manufacturer may accumulate on each engine a number of hours of service equal to the greater of 125 hours or the number of hours the manufacturer accumulated during certification on the emission-data engine corresponding to the configuration specified in the test order. Prior to performing emission testing on an SEA test vehicle, the manufacturer may accumulate on each vehicle a number of miles equal to the greater of 4,000 miles, or the number of miles the manufacturer accumulated during certification on the emission-data vehicle corresponding to the configuration specified in the test order.

(1) Service or mileage accumulation must be performed in a manner using good engineering judgment to obtain emission results representative of normal production vehicles. This service or mileage accumulation must be consistent with the new vehicle break-in instructions contained in the applicable vehicle owner's manual, if any.

(2) The manufacturer shall accumulate service at a minimum rate of 16 hours per engine or mileage at a minimum rate of 300 miles per vehicle during each 24-hour period, unless otherwise provided by the Administrator.

(i) The first 24-hour period for service or mileage accumulation shall begin as soon as authorization checks, inspections and preparations are completed on each engine or vehicle.

(ii) The minimum service or mileage accumulation rate does not apply on weekends or holidays.

(iii) If the manufacturer's service or mileage accumulation target is less than the minimum rate specified (16 hours or 300 miles per day), then the minimum daily accumulation rate shall be equal to the manufacturer's service or mileage accumulation target.

(3) Service or mileage accumulation shall be completed on a sufficient number of test engines or vehicles during consecutive 24-hour periods to assure that the number of engines or vehicles tested per day fulfills the requirements of paragraph (g) of this section.

(d) The manufacturer shall not perform any maintenance on test vehicles or engines after selection for testing, nor shall the Administrator allow deletion of any test vehicle or engine from the test sequence, unless requested by the manufacturer, and approved by the

Administrator before any test vehicle or engine maintenance or deletion.

(e) The manufacturer shall expeditiously ship test engines or vehicles from the point of selection to the test facility. If the test facility is not located at or in close proximity to the point of selection, the manufacturer shall assure that the test engines or vehicles arrive at the test facility within 24 hours of selection: *Except,* that the Administrator may approve more time based upon a request by the manufacturer accompanied by a satisfactory justification.

(f) If an engine or vehicle cannot complete the service or mileage accumulation or emission test because of a malfunction, the manufacturer may request that the Administrator authorize the repair of that engine or vehicle or its deletion from the test sequence.

(g) Whenever the manufacturer conducts testing pursuant to a test order issued under this subpart, the manufacturer shall notify the Administrator within one working day of receipt of the test order, which test facility will be used to comply with the test order and the number of available test cells at that facility. If no test cells are available at the desired facility, the manufacturer must provide alternate testing capability satisfactory to the Administrator.

(1) Heavy-duty engine manufacturers with projected sales for the United States market for that year of 30,000 or greater shall complete emission testing at their facility on a minimum of two engines per 24-hour period, including each voided test and each diesel engine smoke test.

(2) Heavy-duty engine manufacturers with projected sales for the United States market for that year of less than 30,000 shall complete emission testing at their facility on a minimum of one engine per 24-hour period, including each voided test and each diesel engine smoke test.

(3) Light-duty truck and heavy-duty vehicle manufacturers shall perform a combination of tests pursuant to paragraph (a) of this section so that a minimum of four tests are performed per 24 hour period, including voided tests, for each available test cell.

(4) The Administrator may approve a longer period based upon a request by a manufacturer accompanied by satisfactory justification.

(h) The manufacturer shall perform test engine or vehicle selection, shipping, preparation, service or mileage accumulation, and testing in such a manner as to assure that the audit is performed in an expeditious manner.

(i) The manufacturer may retest any test vehicle or engine after a fail decision has been reached in accordance with § 86.1010–2001(d) based on the first test on each vehicle or engine; except that the Administrator may approve retests at other times during the audit based upon a request by the manufacturer accompanied by a satisfactory justification. The manufacturer may test each vehicle or engine a total of three times. The manufacturer shall test each vehicle or engine the same number of times. The manufacturer may accumulate additional service or mileage before conducting retests, subject to the provisions of paragraph (c) of this section.

[59 FR 16305, Apr. 6, 1994, as amended at 62 FR 31239, June 6, 1997; 62 FR 47123, Sept. 5, 1997]

§ 86.1009–84 Calculation and reporting of test results.

(a) Initial test results are calculated following the Federal Test Procedure specified in § 86.1008–94(a). Round the initial test results to the number of decimal places contained in the applicable emission standard, expressed to one additional significant figure. Rounding shall be done in accordance with ASTM E 29–90, Standard Practice for Using Significant Digits in Test Data to Determine Conformance with Specifications. This procedure has been incorporated by reference (see § 86.1).

(b) Final test results for each test vehicle shall be calculated by summing the initial test results derived in paragraph (a) of this section for each test engine or vehicle, dividing by the number of tests conducted on the engine or vehicle, and rounding to the same number of decimal places contained in the applicable emission standard, expressed to one additional significant figure. Rounding shall be done in accordance with ASTM E 29–90, Standard

Practice for Using Significant Digits in Test Data to Determine Conformance with Specifications. This procedure has been incorporated by reference (see §86.1).

(c) *Final deteriorated test results.* (1) The final deteriorated test results for each heavy-duty engine or light-duty truck tested according to subpart B, C, D, N, or P of this part are calculated by either adding or multiplying, as specified in subpart A of this part for the applicable engine family control system combination, the appropriate deterioration factor to the final test results for each vehicle or engine.

(2) The final deteriorated test results for each heavy-duty engine tested according to subpart I of this part are calculated by adding the appropriate deterioration factor, derived from the certification process for the engine family-control system combination and model year for the selected configuration to which the test engine belongs, to the final test results. If the deterioration factor computed during the certification process is less than zero, that deterioration factor will be zero.

(3) There are no deterioration factors for light-duty trucks tested in accordance with §86.146–96 of subpart B of this part or for heavy-duty vehicles tested in accordance with §86.1246–96 of subpart M of this part. Accordingly, for the Fuel Dispensing Spitback Test the term ''final deteriorated test results'' shall mean the final test results derived in paragraph (b) of this section for each test vehicle, rounded to the same number of significant figures contained in the applicable standard in accordance with ASTM E 29–90, Standard Practice for Using Significant Digits in Test Data to Determine Conformance with Specifications. This procedure has been incorporated by reference (see §86.1).

(4) The final deteriorated test results are rounded to the same number of significant figures contained in the applicable standard in accordance with ASTM E 29–90, Standard Practice for Using Significant Digits in Test Data to Determine Conformance with Specifications. This procedure has been incorporated by reference (see §86.1).

(d) Within five working days after completion of testing of all engines or vehicles pursuant to a test order, the manufacturer shall submit to the Administrator a report which includes the following information:

(1) The location and description of the manufacturer's exhaust emission test facilities which were utilized to conduct testing reported pursuant to this section;

(2) The applicable standards or compliance levels against which the engines or vehicles were tested;

(3) Deterioration factors for the engine family to which the selected configuration belongs;

(4) A description of the engine or vehicle and any emission-related component selection method used;

(5) For each test conducted,

(i) Test engine or vehicle description, including:

(A) Configuration and engine family identification,

(B) Year, make and build date,

(C) Engine or vehicle identification number, and

(D) Number of hours of service accumulated on engine or number of miles on vehicle prior to testing;

(ii) Location where service or mileage accumulation was conducted and description of accumulation procedure and schedule;

(iii) Test number, date, initial test results before and after rounding, final test results and final deteriorated test results for all exhaust emission tests, whether valid or invalid, and the reason for invalidation, if applicable;

(iv) A complete description of any modification, repair, preparation, maintenance, and/or testing which was performed on the test engine or vehicle and has not been reported pursuant to any other paragraph of this subpart and will not be performed on all other production engines or vehicles;

(v) Where an engine or vehicle was deleted from the test sequence by authorization of the Administrator, the reason for the deletion;

(vi) For all valid and invalid exhaust emission tests, carbon dioxide emission values for LDTs and brake-specific fuel consumption values for HDEs; and

(vii) Any other information the Administrator may request relevant to

the determination as to whether the new heavy-duty engines or light-duty trucks being manufactured by the manufacturer do in fact conform with the regulations with respect to which the certificate of conformity was issued; and

(6) The following statement and endorsement:

This report is submitted pursuant to Sections 206 and 208 of the Clean Air Act. This Selective Enforcement Audit was conducted in complete conformance with all applicable regulations under 40 CFR part 86 *et seq.*, and the conditions of the test order. No emission-related changes to production processes or quality control procedures for the vehicle or engine configuration tested have been made between receipt of the test order and conclusion of the audit. All data and information reported herein is, to the best of

(Company Name)

knowledge, true and accurate. I am aware of the penalties associated with violations of the Clean Air Act and the regulations thereunder.

(Authorized Company Representative)

[45 FR 63772, Sept. 25, 1980, as amended at 48 FR 52209, Nov. 16, 1983; 50 FR 35387, Aug. 30, 1985; 57 FR 31923, July 17, 1992; 58 FR 16046, Mar. 24, 1993]

§ 86.1009–96 Calculation and reporting of test results.

Section 86.1009–96 includes text that specifies requirements that differ from § 86.1009–84. Where a paragraph in § 86.1009–84 is identical and applicable to § 86.1009–96, this is indicated by specifying the corresponding paragraph and the statement ''[Reserved]. For guidance see § 86.1009–84.'' Where a corresponding paragraph of § 86.1009–84 is not applicable, this is indicated by the statement ''[Reserved].''

(a) Initial test results are calculated following the test procedures specified in § 86.1008(a). Round these results to the number of decimal places contained in the applicable emission standard expressed to one additional significant figure. Rounding is done in accordance with ASTM E 29–90, Standard Practice for Using Significant Digits in Test Data to Determine Conformance with Specifications. This procedure has been incorporated by reference (see § 86.1).

(b) Final test results are calculated by summing the initial test results within a specific FTP, CST, or Cold Temperature CO Test Procedure derived in paragraph (a) of this section for each test engine or vehicle, dividing by the number of times that specific FTP, CST, or Cold Temperature CO Test Procedure has been conducted on the engine or vehicle, and rounding in accordance with ASTM E29–90 to the same number of decimal places contained in the applicable standard expressed to one additional significant figure. Rounding is done in accordance with ASTM E 29–90, Standard Practice for Using Significant Digits in Test Data to Determine Conformance with Specifications. This procedure has been incorporated by reference (see § 86.1).

(c) *Final deteriorated test results.* (1) The final deteriorated test results for each heavy-duty engine or light-duty truck tested according to subpart B, C, D, I, N, or P of this part are calculated by multiplying or adding the final test results by the appropriate deterioration factor, derived from the certification process for the engine family-control system combination and model year for the selected configuration to which the test engine or vehicle belongs. If the multiplicative deterioration factor as computed during the certification process is less than one, that deterioration factor is one. If the additive deterioration factor as computed during the certification process is less than zero, that deterioration factor will be zero.

(2) [Reserved]

(3)(i) There are no deterioration factors for light-duty vehicles tested in accordance with subpart O of this part. Accordingly, for the CST the term ''final deteriorated test results'' means the final test results derived in paragraph (b) of this section for each test vehicle.

(ii) There are no deterioration factors for light-duty trucks tested in accordance with § 86.146–96 or for heavy-duty vehicles tested in accordance with § 86.1246–96. Accordingly, for the Fuel Dispensing Spitback Test the term ''final deteriorated test results'' means the final test results derived in paragraph (b) of this section for each test vehicle.

(4) The final deteriorated test results are rounded to the same number of significant figures contained in the applicable standard in accordance with ASTM E 29–90, Standard Practice for Using Significant Digits in Test Data to Determine Conformance with Specifications. This procedure has been incorporated by reference (see §86.1).

(d) [Reserved]. For guidance see §86.1009–84.

[58 FR 58425, Nov. 1, 1993]

§86.1009–97 Calculation and reporting of test results.

Section 86.1009–97 includes text that specifies requirements that differ from those specified in §§86.1009–84 and 86.1009–96. Where a paragraph in §86.1009–84 or §86.1009–96 is identical and applicable to §86.1009–97, this may be indicated by specifying the corresponding paragraph and the statement ''[Reserved]. For guidance see §86.1009–84.'' or ''[Reserved]. For guidance see §86.1009–96.''.

(a) and (b) [Reserved]. For guidance see §86.1009–96.

(c) *Final deteriorated test results.* (1) The final deteriorated test results for each heavy-duty engine or light-duty truck tested according to subpart B, C, D, I, N, P, or R of this part are calculated by first multiplying or adding, as appropriate, the final test results by or to the appropriate deterioration factor derived from the certification process for the engine family control system combination and model year to which the selected configuration belongs, and then by multiplying by the appropriate reactivity adjustment factor, if applicable. If the multiplicative deterioration factor as computed during the certification process is less than one, that deterioration factor will be one. If the additive deterioration factor as computed during the certification process is less than zero, that deterioration factor will be zero.

(c)(2) [Reserved]

(c)(3) through (c)(4) [Reserved]. For guidance see §86.1009–96.

(d) [Reserved]. For guidance see §86.1009–84.

[62 FR 31239, June 6, 1997]

§86.1009–2001 Calculation and reporting of test results.

(a) Initial test results are calculated following the Federal Test Procedure specified in §86.1008–2001(a). Rounding is done in accordance with ASTM E 29–67 (reapproved 1980) (as referenced in §86.094–28 (a)(4)(i)(B)(*2*)(*ii*) to the number of decimal places contained in the applicable emission standard expressed to one additional significant figure.

(b) Final test results are calculated by summing the initial test results derived in paragraph (a) of this section for each test vehicle or engine, dividing by the number of times that specific test has been conducted on the vehicle or engine, and rounding to the same number of decimal places contained in the applicable standard expressed to one additional significant figure. Rounding is done in accordance with ASTM E 29–67 (reapproved 1980) (as referenced in §86.094–28(a)(4)(i)(B)(*2*)(*ii*)).

(c) *Final deteriorated test results.* (1) The final deteriorated test results for each light-duty truck, heavy-duty engine, or heavy-duty vehicle tested according to subpart B, C, D, I, M, N, P, or R of this part are calculated by first multiplying or adding, as appropriate, the final test results by or to the appropriate deterioration factor derived from the certification process for the engine or evaporative/refueling family and model year to which the selected configuration belongs, and then by multiplying by the appropriate reactivity adjustment factor, if applicable. For the purpose of this paragraph (c), if a multiplicative deterioration factor as computed during the certification process is less than one, that deterioration factor will be one. If an additive deterioration factor as computed during the certification process is less than zero, that deterioration factor will be zero.

(2) *Exceptions.* There are no deterioration factors for light-duty truck emissions obtained during testing in accordance with subpart O of this part or with §86.146–96. Accordingly, for the CST and the fuel dispensing spitback test the term ''final deteriorated test results'' means the final test results derived in paragraph (b) of this section for each test vehicle.

(3) The final deteriorated test results obtained in paragraph (c) (1) and (2) of this section are rounded to the same number of decimal places contained in the applicable emission standard. Rounding is done in accordance with ASTM E 29–67 (reapproved 1980) (as referenced in § 86.094–28(a)(4)(i)(B)(*2*)(*ii*)).

(d) Within five working days after completion of testing of all engines or vehicles pursuant to a test order, the manufacturer shall submit to the Administrator a report which includes the following information:

(1) The location and description of the manufacturer's emission test facilities which were utilized to conduct testing reported pursuant to this section.

(2) The applicable standards or compliance levels against which the engines or vehicles were tested.

(3) Deterioration factors for the selected configuration.

(4) A description of the engine or vehicle and any emission-related component selection method used.

(5) For each test conducted.

(i) Test engine or vehicle description including:

(A) Configuration, engine family, and evaporative/refueling family identification.

(B) Year, make, build date, and model of vehicle.

(C) Vehicle Identification Number.

(D) Miles accumulated on vehicle.

(ii) Location where mileage accumulation was conducted and description of accumulation schedule.

(iii) Test number, date initial test results, final results and final deteriorated test results for all valid and invalid exhaust emission tests, and the reason for invalidation, if applicable.

(iv) A complete description of any modification, repair, preparation, maintenance and/or testing which was performed on the test engine or vehicle and has not been reported pursuant to any other paragraph of this subpart and will not be performed on all other production engines or vehicles.

(v) Where an engine or vehicle was deleted from the test sequence by authorization of the Administrator, the reason for the deletion.

(vi) For all valid and invalid exhaust emission tests, carbon dioxide emission values for LDTs and brake-specific fuel consumption values for HDEs.

(vii) Any other information the Administrator may request relevant to the determination as to whether the new motor vehicles being manufactured by the manufacturer do in fact conform with the regulations with respect to which the certificate of conformity was issued.

(6) The following statement and endorsement:

This report is submitted pursuant to sections 206 and 208 of the Clean Air Act. This Selective Enforcement Audit was conducted in complete conformance with all applicable regulations under 40 CFR part 86 and the conditions of the test order. No emission related change(s) to production processes or quality control procedures for the engine or vehicle configuration tested have been made between receipt of this test order and conclusion of the audit. All data and information reported herein is, to the best of

_____

(Company Name)

knowledge, true and accurate. I am aware of the penalties associated with violations of the Clean Air Act and the regulations thereunder.

_____

(Authorized Company Representative)

[59 FR 16308, Apr. 6, 1994, as amended at 62 FR 31239, June 6, 1997]

§ 86.1010–96 Compliance with acceptable quality level and passing and failing criteria for Selective Enforcement Audits.

(a) The prescribed acceptable quality level is 40 percent.

(b) A failed engine or vehicle is one whose final deteriorated test results pursuant to § 86.1009(c), for one or more of the applicable pollutants, including fuel spitback, exceed the applicable emission standard or compliance level. For the CST as described in subpart O of this part, a vehicle fail determination is made if the final deteriorated test results for HC and/or CO emissions from any CST exceed the applicable emission standard.

(c) *Pass/fail criteria*. (1) The manufacturer must test heavy-duty engines, heavy duty vehicles, or light-duty trucks comprising the test sample until a pass decision is reached for all pollutants, or a fail decision is reached for one pollutant. A pass decision is

reached when the cumulative number of failed engines or vehicles, as defined in paragraph (b) of this section, for each pollutant is less than or equal to the pass decision number appropriate to the cumulative number of engines or vehicles tested. A fail decision is reached when the cumulative number of failed engines or vehicles for one or more pollutants is greater than or equal to the fail decision number appropriate to the cumulative number of engines or vehicles tested. The pass and fail decision numbers associated with the cumulative number of engines or vehicles tested are determined by use of the tables in appendix X to this part appropriate to the projected sales as made by the heavy-duty engine or heavy-duty vehicle manufacturer in its Application for Certification, or as made by the light-duty truck manufacturer as made in its report submitted under §600.207–80(a)(2) of this chapter (Automobile Fuel Economy Regulations). In the tables in appendix X to this part, sampling plan ''stage'' refers to the cumulative number of engines or vehicles tested. Once a pass or fail decision has been made for a particular pollutant, the number of engines or vehicles whose final deteriorated test results exceed the emission standard or compliance level, if applicable, for that pollutant may not be considered any further for purposes of the audit.

(2) *CST criteria only*. A pass/fail decision is made based on the CST in its entirety rather than on a per pollutant basis. The manufacturer must test vehicles comprising the test sample until a pass or fail decision is reached for the CST. A pass decision is reached when the cumulative number of failed vehicles, as defined in paragraph (b) of this section, based on CST testing, is less than or equal to the pass decision number appropriate to the cumulative number of vehicles tested. A fail decision is reached when the cumulative number of failed vehicles based on CST testing is greater than or equal to the fail decision number appropriate to the cumulative number of vehicles tested. The pass and fail decision numbers associated with the cumulative number of vehicles tested are determined by use of the tables in appendix X to this part appropriate to the projected sales as made by the light-duty truck manufacturer as made in its report submitted under §600.207–80(a)(2) of this chapter (Automobile Fuel Economy Regulations). In the tables in appendix X to this part, sampling plan ''stage'' refers to the cumulative number of engines or vehicles tested. Once a pass or fail decision has been made based on CST testing, the number of vehicles whose final deteriorated test results exceed any of the emission standards for any CST may not be considered any further for purposes of the audit.

(d) Passing or failing of a SEA occurs when the decision is made on the last engine or vehicle required to make a decision under paragraph (c) of this section.

(e) The Administrator may terminate testing earlier than required in paragraph (c) of this section.

[58 FR 58426, Nov. 1, 1993]

§86.1010–2001 Compliance with acceptable quality level and passing and failing criteria for Selective Enforcement Audits.

(a) The prescribed acceptable quality level is 40 percent.

(b) A failed vehicle or engine is one whose final deteriorated test results pursuant to §86.1009–2001(c) exceed at least one of the applicable emission standards associated with the test procedures pursuant to §86.1008–2001(a).

(c)(1) *Pass/fail criteria*. The manufacturer shall test light-duty trucks, heavy-duty engines, or heavy-duty vehicles comprising the test sample until a pass decision is reached for all of the pollutants associated with all of the test procedures pursuant to §86.1008–2001(a) or a fail decision is reached for one of these pollutants. A pass decision is reached when the cumulative number of failed vehicles or engines, as defined in paragraph (b) of this section, for each pollutant is less than or equal to the fail decision number appropriate to the cumulative number of vehicles tested. A fail decision is reached when the cumulative number of failed vehicles or engines for one pollutant is greater than or equal to the fail decision number appropriate to the cumulative number of vehicles tested. The

pass and fail decision numbers associated with the cumulative number of vehicles tested are determined by use of the tables in appendix X of this part appropriate to the projected sales as made by the heavy-duty engine or heavy-duty vehicle manufacturer in its Application for Certification, or as made by the light-duty truck manufacturer in its report submitted under § 600.207–80(a)(2) of this chapter (Automobile Fuel Economy Regulations). In the tables in appendix X of this part, sampling plan ''stage'' refers to the cumulative number of vehicles or engines tested. Once a pass decision has been made for a particular pollutant associated with a particular test procedure pursuant to § 86.1008–2001(a), the number of vehicles or engines whose final deteriorated test results exceed the emission standard for that pollutant may not be considered any further for purposes of the audit.

(2) *CST criteria only*. For CST testing pursuant to subpart O, a pass or fail decision is determined according to the pass/fail criteria described in paragraph (c)(1) of this section, except that for each vehicle, the CST in its entirety is considered one pollutant.

(d) Passing or failing of an SEA audit occurs when the decision is made on the last vehicle or engine required to make a decision under paragraph (c) of this section.

(e) The Administrator may terminate testing earlier than required in paragraph (c) of this section.

[59 FR 16309, Apr. 6, 1994]

§ 86.1012–84 Suspension and revocation of certificates of conformity.

(a) The certificate of conformity is suspended with respect to any engine or vehicle failing pursuant to paragraph (b) of § 86.1010–84 effective from the time that testing of that engine or vehicle is completed.

(b) The Administrator may suspend the certificate of conformity for a configuration which does not pass an SEA, pursuant to paragraph § 86.1010–84(c), based on the first test or all tests conducted on each engine or vehicle. This suspension will not occur before ten days after failure to pass the audit.

(c)–(d) [Reserved]

(e) If the results of testing pursuant to these regulations indicate that engines or vehicles of a particular configuration produced at one plant of a manufacturer do not conform to the regulations with respect to which the certificate of conformity was issued, the Administrator may suspend the certificate of conformity with respect to that configuration for engines or vehicles manufactured by the manufacturer at all other plants.

(f) [Reserved]

(g) The Administrator shall notify the manufacturer in writing of any suspension or revocation of a certificate of conformity in whole or in part: *Except*, That the certificate is immediately suspended with respect to any failed engines or vehicles as provided for in paragraph (a) of this section.

(h) The Administrator may revoke a certificate of conformity for a configuration when the certificate has been suspended pursuant to paragraph (b), (c) or (e) of this section if the proposed remedy for the nonconformity, as reported by the manufacturer to the Administrator, is one requiring a design change or changes to the engine and/or emission control system as described in the Application for Certification of the affected configuration.

(i) Once a certificate has been suspended for a failed engine or vehicle as provided for in paragraph (a) of this section, the manufacturer shall take the following actions:

(1) Before the certificate is reinstated for that failed engine or vehicle,

(i) Remedy the nonconformity, and

(ii) Demonstrate that the engine or vehicle conforms to applicable standards or compliance levels by retesting the engine or vehicle in accordance with these regulations; and

(2) Submit a written report to the Administrator, after successful completion of testing on the failed engine or vehicle, which contains a description of the remedy and test results for each engine or vehicle in addition to other information that may be required by this regulation.

(j) Once a certificate for a failed configuration has been suspended pursuant to paragraph (b), (c) or (e) of this section, the manufacturer shall take the

following actions before the Administrator will consider reinstating the certificate:

(1) Submit a written report to the Administrator which identifies the reason for the noncompliance of the engines or vehicles, describes the proposed remedy, including a description of any proposed quality control and/or quality assurance measures to be taken by the manufacturer to prevent future occurrences of the problem, and states the date on which the remedies will be implemented; and

(2) Demonstrate that the engine or vehicle configuration for which the certificate of conformity has been suspended does in fact comply with these regulations by testing engines or vehicles selected from normal production runs of that engine or vehicle configuration, at the plant(s) or associated storage facilities specified by the Administrator, in accordance with the conditions specified in the initial test order. If the manufacturer elects to continue testing individual engines or vehicles after suspension of a certificate, the certificate is reinstated for any engine or vehicle actually determined to be in conformance with the applicable standards or compliance levels through testing in accordance with the applicable test procedures, provided that the Administrator has not revoked the certificate pursuant to paragraph (h) of this section.

(k) Once the certificate has been revoked for a configuration and the manufacturer desires to continue introduction into commerce of a modified version of that configuration, the following actions shall be taken before the Administrator may consider issuing a certificate for that modified configuration:

(1) If the Administrator determines that the proposed change(s) in engine or vehicle design may have an effect on emission performance deterioration or, in the case of light-duty trucks, on fuel economy, the Administrator shall notify the manufacturer, within five (5) working days after receipt of the report in paragraph (h) of this section, whether subsequent testing under this subpart will be sufficient to evaluate the proposed change or changes or whether additional testing will be required; and

(2) After implementing the change or changes intended to remedy the nonconformity, the manufacturer shall demonstrate that the modified engine or vehicle configuration does in fact conform with these regulations by testing engines or vehicles selected from normal production runs of that modified engine or vehicle configuration in accordance with the conditions specified in the initial test order. This testing will be considered by the Administrator to satisfy the testing requirements of §86.078–32 or §86.079–33 if the Administrator has so notifed the manufacturer. If the subsequent audit results in passing of the audit at the level of the standards or compliance levels, if applicable, the Administrator shall reissue or amend the certificate, as the case may be, to include that configuration, provided that the manufacturer has satisfied the testing requirements of paragraph (k)(1) of this section. If the subsequent audit is failed, the revocation remains in effect. Any design change approvals under this subpart are limited to the configuration affected by the test order.

(l) At any time subsequent to an initial suspension of a certificate of conformity for a test engine or vehicle pursuant to paragraph (a) of this section, but not later than fifteen (15) days or such other period as may be allowed by the Administrator after notification of the Administrator's decision to suspend or revoke a certificate of conformity in whole or in part pursuant to paragraphs (b), (c), (d), (e), or (h) of this section, a manufacturer may request a hearing as to whether the tests have been properly conducted or any sampling methods have been properly applied.

(m) After the Administrator suspends or revokes a certificate of conformity pursuant to this section or notifies a manufacturer of his intent to suspend, revoke or void a certificate of conformity under paragraph §86.087–30(e), and prior to the commencement of a hearing under §86.1014–84, if the manufacturer demonstrates to the Administrator's satisfaction that the decision to suspend, revoke or void the certificate was based on erroneous information,

the Administrator shall reinstate the certificate.

(n) To permit a manufacturer to avoid storing non-test engines or vehicles when conducting an audit of a configuration subsequent to suspension or revocation of the certificate of conformity for that configuration resulting from failure of an SEA, it may request that the Administrator conditionally reinstate the certificate for that configuration. The Administrator may reinstate the certificate subject to the condition that the manufacturer consents to recall all engines or vehicles of that configuration produced from the time the certificate is conditionally reinstated if the configuration fails the subsequent audit at the level of the standard and to remedy any nonconformity at no expense to the owner.

[45 FR 63772, Sept. 25, 1980, as amended at 48 FR 52209, Nov. 16, 1983; 50 FR 35387, Aug. 30, 1985]

§ 86.1012–97 Suspension and revocation of certificates of conformity.

(a) The certificate of conformity is immediately suspended with respect to any engine or vehicle failing pursuant to § 86.1010(b) effective from the time that testing of that engine or vehicle is completed.

(b)(1) *Selective Enforcement Audits.* The Administrator may suspend the certificate of conformity for a configuration that does not pass a Selective Enforcement Audit pursuant to § 86.1010(c) based on the first test, or all tests, conducted on each engine or vehicle. This suspension will not occur before ten days after failure to pass the audit.

(2) *California Assembly-Line Quality Audit Testing.* The Administrator may suspend the certificate of conformity for a 50-state engine family or configuration tested in accordance with procedures prescribed under § 86.1008 that the Executive Officer has determined to be in non-compliance with one or more applicable pollutants based on Chapter 1 or Chapter 2 of the California Regulatory Requirements Applicable to the National Low Emission Vehicle Program (October, 1996), if the results of vehicle testing conducted by the manufacturer do not meet the acceptable quality level criteria pursuant to § 86.1010. The California Regulatory Requirements Applicable to the National Low Emission Vehicle Program (October, 1996) are incorporated by reference (see § 86.1). A vehicle that is tested by the manufacturer in accordance with procedures prescribed under § 86.1008 and determined to be a failing vehicle pursuant to Chapter 1 or Chapter 2 of the California Regulatory Requirements Applicable to the National Low Emission Vehicle Program (October, 1996) will be treated as a failed vehicle described in § 86.1010(b), unless the manufacturer can show that the vehicle would not be considered a failed vehicle using the test procedures specified in § 86.1008. This suspension will not occur before ten days after the manufacturer receives written notification that the Administrator has determined the 50-state engine family or configuration exceeds one or more applicable federal standards.

(c)(1) *Selective Enforcement Audits.* If the results of engine or vehicle testing pursuant to the requirements of this subpart indicate that engines or vehicles of a particular configuration produced at more than one plant do not conform to the regulations with respect to which the certificate of conformity was issued, the Administrator may suspend the certificate of conformity with respect to that configuration for engines or vehicles manufactured by the manufacturer in other plants of the manufacturer.

(2) *California Assembly-Line Quality Audit Testing.* If the Administrator determines that the results of vehicle testing pursuant to Chapter 1 or Chapter 2 of the California Regulatory Requirements Applicable to the National Low Emission Vehicle Program (October, 1996) and the procedures prescribed in § 86.1008 indicate the vehicles of a particular 50-state engine family or configuration produced at more than one plant do not conform to applicable regulations with respect to which a certificate of conformity was issued, the Administrator may suspend, pursuant to paragraph (b)(2) of this section, the certificate of conformity with respect to that engine family or configuration for vehicles manufactured by the manufacturer in other plants of the

manufacturer. The California Regulatory Requirements Applicable to the National Low Emission Vehicle Program (October, 1996) are incorporated by reference (see § 86.1).

(d) The Administrator will notify the manufacturer in writing of any suspension or revocation of a certificate of conformity in whole or in part: Except, that the certificate is immediately suspended with respect to any failed engines or vehicles as provided for in paragraph (a) of this section.

(e)(1) *Selective Enforcement Audits.* The Administrator may revoke a certificate of conformity for a configuration when the certificate has been suspended pursuant to paragraph (b)(1) or (c)(1) of this section if the proposed remedy for the nonconformity, as reported by the manufacturer to the Administrator is one requiring a design change(s) to the engine and/or emission control system as described in the Application for Certification of the affected configuration.

(2) *California Assembly-Line Quality Audit Testing.* The Administrator may revoke a certificate of conformity for an engine family or configuration when the certificate has been suspended pursuant to paragraph (b)(2) or (c)(2) of this section if the proposed remedy for the nonconformity, as reported by the manufacturer to the Executive Officer and/or the Administrator, is one requiring a design change(s) to the engine and/or emission control system as described in the Application for Certification of the affected engine family or configuration.

(f) Once a certificate has been suspended for a failed engine or vehicle as provided for in paragraph (a) of this section, the manufacturer must take the following actions:

(1) Before the certificate is reinstated for that failed engine or vehicle—

(i) Remedy the nonconformity; and

(ii) Demonstrate that the engine or vehicle's final deteriorated test results conform to the applicable emission standards or family particulate emission limits, as defined in this part 86 by retesting the engine or vehicle in accordance with the requirements of this subpart.

(2) Submit a written report to the Administrator within thirty days after successful completion of testing on the failed engine or vehicle, which contains a description of the remedy and test results for the engine or vehicle in addition to other information that may be required by this subpart.

(g) Once a certificate has been suspended pursuant to paragraph (b) or (c) of this section, the manufacturer must take the following actions before the Administrator will consider reinstating such certificate:

(1) Submit a written report to the Administrator which identifies the reason for the noncompliance of the vehicles, describes the proposed remedy, including a description of any proposed quality control and/or quality assurance measures to be taken by the manufacturer to prevent the future occurrence of the problem, and states the date on which the remedies will be implemented.

(2) Demonstrate that the engine family or configuration for which the certificate of conformity has been suspended does in fact comply with the requirements of this subpart by testing engines or vehicles selected from normal production runs of that engine family or configuration at the plant(s) or the facilities specified by the Administrator, in accordance with:

(i) The conditions specified in the initial test order pursuant to § 86.1003 for a configuration suspended pursuant to paragraph (b)(1) or (c)(1) of this section; or

(ii) The conditions specified in a test order pursuant to § 86.1003 for an engine family or configuration suspended pursuant to paragraph (b)(2) or (c)(2) of this section.

(3) If the Administrator has not revoked the certificate pursuant to paragraph (e) of this section and if the manufacturer elects to continue testing individual engines or vehicles after suspension of a certificate, the certificate is reinstated for any engine or vehicle actually determined to have its final deteriorated test results in conformance with the applicable standards through testing in accordance with the applicable test procedures.

(4) In cases where the Administrator has suspended a certificate of conformity for a 50-state engine family or configuration pursuant to paragraph (b)(2)

or (c)(2) of this section, manufacturers may request in writing that the Administrator reinstate the certificate of an engine family or configuration when, in lieu of the actions described in paragraphs (g) (1) and (2) of this section, the manufacturer has complied with Chapter 3 of the California Regulatory Requirements Applicable to the National Low Emission Vehicle Program (October, 1996), provided an Executive Order is in place for the engine family or configuration. The California Regulatory Requirements Applicable to the National Low Emission Vehicle Program (October, 1996) are incorporated by reference (see § 86.1).

(h) Once a certificate for a failed engine family or configuration has been revoked under paragraph (e) (1) or (2) of this section and the manufacturer desires to introduce into commerce a modified version of that engine family or configuration the following actions will be taken before the Administrator may issue a certificate for the new engine family or configuration:

(1) If the Administrator determines that the proposed change(s) in engine or vehicle design may have an effect on emission performance deterioration and/or fuel economy, he/she shall notify the manufacturer within 5 working days after receipt of the report in paragraph (g)(1) of this section or after receipt of information pursuant to paragraph (g)(4) of this section whether subsequent testing under this subpart will be sufficient to evaluate the proposed change(s) or whether additional testing will be required.

(2) After implementing the change(s) intended to remedy the nonconformity, the manufacturer shall demonstrate:

(i) If the certificate was revoked pursuant to paragraph (e)(1) of this section, that the modified configuration does in fact conform with the requirements of this subpart by testing engines or vehicles selected from normal production runs of that modified configuration in accordance with the conditions specified in the initial test order pursuant to § 86.1003. The Administrator shall consider this testing to satisfy the testing requirements of § 86.079–32 or § 86.079–33 if the Administrator had so notified the manufacturer. If the subsequent testing results in a pass decision pursuant to the criteria in § 86.1010(c), the Administrator shall reissue or amend the certificate, if necessary, to include that configuration: *Provided*, that the manufacturer has satisfied the testing requirements specified in paragraph (h)(1) of this section. If the subsequent audit results in a fail decision pursuant to the criteria in § 86.1010(c), the revocation remains in effect. Any design change approvals under this subpart are limited to the modification of the configuration specified by the test order.

(ii) If the certificate was revoked pursuant to paragraph (e)(2) of this section, that the modified engine family or configuration does in fact conform with the requirements of this subpart by testing vehicles selected from normal production runs of that modified engine family or configuration in accordance with the conditions specified in a test order pursuant to § 86.1003. The Administrator shall consider this testing to satisfy the testing requirements of § 86.079–32 or § 86.079–33 if the Administrator had so notified the manufacturer. If the subsequent testing results in a pass decision pursuant to § 86.1010(c), the Administrator shall reissue or amend the certificate as necessary: *Provided*, that the manufacturer has satisfied the testing requirements specified in paragraph (h)(1) of this section. If the subsequent testing results in a fail decision pursuant to § 86.1010(c), the revocation remains in effect. Any design change approvals under this subpart are limited to the modification of the engine family or configuration specified by the test order.

(3) In cases where the Administrator has revoked a certificate of conformity for a 50-state engine family or configuration pursuant to paragraph (e)(2) of this section, manufacturers may request in writing that the Administrator reissue the certificate for an engine family or configuration when, in lieu of the actions described in paragraphs (h) (1) and (2) of this section, the manufacturer has complied with Chapter 3 of the California Regulatory Requirements Applicable to the National Low Emission Vehicle Program (October, 1996), provided an Executive Order is in place for the engine family

or configuration. The California Regulatory Requirements Applicable to the National Low Emission Vehicle Program (October, 1996) are incorporated by reference (see §86.1).

(i) through (k) [Reserved]

(l) At any time subsequent to an initial suspension of a certificate of conformity for a test engine or vehicle pursuant to paragraph (a) of this section, but not later than fifteen (15) days or such other period as may be allowed by the Administrator after notification of the Administrator's decision to suspend or revoke a certificate of conformity in whole or in part pursuant to paragraphs (b), (c), (d), (e), or (h) of this section, a manufacturer may request a hearing as to whether the tests have been properly conducted or any sampling methods have been properly applied.

(m) After the Administrator suspends or revokes a certificate of conformity pursuant to this section or notifies a manufacturer of his intent to suspend, revoke or void a certificate of conformity under paragraph §86.087–30(e), and prior to the commencement of a hearing under §86.1014, if the manufacturer demonstrates to the Administrator's satisfaction that the decision to suspend, revoke or void the certificate was based on erroneous information, the Administrator shall reinstate the certificate.

(n) To permit a manufacturer to avoid storing non-test engines or vehicles when conducting testing of an engine family or configuration subsequent to suspension or revocation of the certificate of conformity for that engine family or configuration pursuant to paragraph (b), (c), or (e) of this section, the manufacturer may request that the Administrator conditionally reinstate the certificate for that engine family or configuration. The Administrator may reinstate the certificate subject to the condition that the manufacturer consents to recall all engines or vehicles of that engine family or configuration produced from the time the certificate is conditionally reinstated if the engine family or configuration fails the subsequent testing and to remedy any nonconformity at no expense to the owner.

[62 FR 31240, June 6, 1997]

§86.1014–84 Hearings on suspension, revocation and voiding of certificate of conformity.

(a) *Applicability.* The procedures prescribed by this section apply whenever a manufacturer requests a hearing pursuant to §86.087–30 (e)(6)(i), §86.087–30(e)(7), or §86.1012–84(1).

(b) *Definitions.* The following definitions are applicable to this section:

(1) *Hearing Clerk* shall mean the Hearing Clerk of the Environmental Protection Agency.

(2) *Manufacturer* means a manufacturer contesting a suspension or revocation order directed at the manufacturer.

(3) *Party* means the Agency and the manufacturer.

(4) *Presiding Officer* means an Administrative Law Judge appointed pursuant to 5 U.S.C. 3105 (see also 5 CFR part 930 as amended).

(5) *Environmental Appeals Board* shall mean the Board within the Agency described in §1.25 of this title. The Administrator delegates authority to the Environmental Appeals Board to issue final decisions in appeals filed under this subpart. Appeals directed to the Administrator, rather than to the Environmental Appeals Board, will not be considered. This delegation of authority to the Environmental Appeals Board does not preclude the Environmental Appeals Board from referring an appeal or a motion filed under this subpart to the Administrator for decision when the Environmental Appeals Board, in its discretion, deems it appropriate to do so. When an appeal or motion is referred to the Administrator, all parties shall be so notified and the rules in this part referring to the Environmental Appeals Board shall be interpreted as referring to the Administrator.

(c) *Request for public hearing.* (1) If the manufacturer disagrees with the Administrator's decision to suspend, revoke or void a certificate or disputes the basis for an automatic suspension pursuant to §86.1012–84(a), the manufacturer may request a public hearing as described in this section. The manufacturer shall file with the Administrator a request for this hearing not later than fifteen (15) days after the

Administrator's notification of his decision to suspend or revoke unless otherwise specified by the Administrator. The manufacturer shall simultaneously serve two copies of this request upon the Director of the Manufacturers Operations Division and file two copies with the Hearing Clerk. Failure of the manufacturer to request a hearing within the time provided constitutes a waiver of the right to a hearing. Subsequent to the expiration of the period for requesting a hearing as of right, the Administrator may, in his discretion and for good cause shown, grant the manufacturer a hearing to contest the suspension or revocation.

(2) A manufacturer shall include in the request for a public hearing—

(i) A statement as to which engine or vehicle configuration is to be the subject of the hearing;

(ii) A concise statement of the issues to be raised by the manufacturer at the hearing: *Provided, however,* That in the case of the hearing requested under § 86.1012–84(1), the hearing is restricted to the following issues:

(A) Whether tests have been properly conducted, specifically, Whether the tests were conducted in accordance with applicable regulations under this part and whether test equipment was properly calibrated and functioning; and

(B) Whether sampling plans have been properly applied, specifically, whether sampling procedures specified in appendix X were followed and whether there exists a basis for distinguishing engines or vehicles produced at plants other than the one from which engines or vehicles were selected for testing which would invalidate the Administrator's decision under § 86.1012–84(e);

(iii) A statement specifying reasons why the manufacturer believes it will prevail on the merits of each of the issues raised; and

(iv) A summary of the evidence which supports the manufacturer's position on each of the issues raised.

(3) A copy of all requests for public hearings will be kept on file in the Office of the Hearing Clerk and will be made available to the public during Agency business hours.

(d) *Summary decision.* (1) In the case of a hearing requested under § 86.1012–84(1), when it clearly appears from the data and other information contained in the request for a hearing that there is no genuine and substantial question of fact with respect to the issues specified in § 86.1014–84(c)(2)(ii), the Administrator shall enter an order denying the request for a hearing and reaffirming the original decision to suspend or revoke a certificate of conformity, if this decision has been made pursuant to § 86.1012–84(g) at any time prior to the decision to deny the request for a hearing.

(2) In the case of a hearing requested under § 86.087–30(e)(6)(i), to challenge a proposed suspension of a certificate of conformity for the reasons specified in § 86.087–30(e)(1)(i) or (e)(1)(ii), when it clearly appears from the data and other information contained in the request for the hearing that there is no genuine and substantial question of fact with respect to the issue of whether the refusal to comply with the provisions of a test order or any other requirement of § 86.1003–84 was caused by conditions and circumstances outside the control of the manufacturer, the Administrator shall enter an order denying the request for a hearing and suspending the certificate of conformity.

(3) Any order issued under paragraph (d) (1) or (2) of this section has the force and effect of a final decision of the Administrator, as issued pursuant to paragraph (w)(4) of this section.

(4) If the Administrator determines that a genuine and substantial question of fact does exist with respect to any of the issues referred to in paragraphs (d) (1) and (2) of this section, he shall grant the request for a hearing and publish a notice of public hearing in accordance with paragraph (h) of this section.

(e) *Filing and service.* (1) An original and two copies of all documents or papers required or permitted to be filed pursuant to this section must be filed with the Hearing Clerk. Filing is considered timely if mailed, as determined by the postmark, to the Hearing Clerk within the time allowed by this section. If filing is to be accomplished by mailing, the documents must be sent

to the address set forth in the notice of public hearing as described in paragraph (h) of this section.

(2) To the maximum extent possible, testimony will be presented in written form. Copies of written testimony will be served upon all parties as soon as practicable prior to the start of the hearing. A certificate of service will be provided on or accompany each document or paper filed with the Hearing Clerk. Documents to be served upon the Director of the Manufacturers Operations Division must be sent by registered mail to:

Director, Manufacturers Operations Division, U.S. Environmental Protection Agency, EN–340, 401 M Street S.W., Washington, D.C. 20460.

Service by registered mail is complete upon mailing.

(f) *Time.* (1) In computing any period of time prescribed or allowed by this section, except as otherwise provided, the day of the act or event from which the designated period of time begins to run is not included. Saturdays, Sundays, and Federal legal holidays are included in computing the period allowed for the filing of any document or paper, except that when the period expires on a Saturday, Sunday, or Federal legal holiday, the period is extended to include the next following business day.

(2) A prescribed period of time within which a party is required or permitted to do an act is computed from the time of service, except that when service is accomplished by mail, three days will be added to the prescribed period.

(g) *Consolidation.* The Administrator or the Presiding Officer in his discretion may consolidate two or more proceedings to be held under this section for the purpose of resolving one or more issues whenever it appears that consolidation will expedite or simplify consideration of these issues. Consolidation does not affect the right of any party to raise issues that could have been raised if consolidation had not occurred.

(h) *Notice of public hearings.* Notice of a public hearing under this section is given by publication in the FEDERAL REGISTER and by such other means as the Administrator finds appropriate to provide notice to the public. To the extent possible hearings under this section will be scheduled to commence within fourteen (14) days of receipt of the application in paragraph (c) of this section.

(i) *Amicus curiae.* Persons not parties to the proceeding wishing to file briefs may do so by leave of the Presiding Officer granted on motion. A motion for leave must identify the interest of the applicant and state the reasons why the proposed amicus brief is desirable.

(j) *Presiding Officer.* The Presiding Officer shall conduct a fair and impartial hearing in accordance with 5 U.S.C. sections 554, 556 and 557 and take all necessary action to avoid delay in the disposition of the proceedings and to maintain order. He shall have all power consistent with Agency rule and with the Administrative Procedure Act necessary to this end, including the power:

(1) To administer oaths and affirmations;

(2) To rule upon offers of proof and exclude irrelevant or repetitious material;

(3) To regulate the course of the hearings and the conduct of the parties and their counsel therein;

(4) To hold conferences for simplification of the issues or any other proper purpose;

(5) To consider and rule upon all procedural and other motions appropriate to these proceedings;

(6) To require the submission of direct testimony in written form with or without affidavit whenever, in his opinion, oral testimony is not necessary for full and true disclosure of the facts;

(7) To enforce agreements and orders requiring access as authorized by law;

(8) To require the filing of briefs on any matter on which he is required to rule;

(9) To require any party or any witness, during the course of the hearing, to state his position on any issue;

(10) To take or cause depositions to be taken whenever the ends of justice would be served thereby;

(11) To make decisions or recommend decisions to resolve the disputed issues on the record of the hearing; and

(12) To issue, upon good cause shown, protective orders as described in paragraph (n) of this section.

(k) *Conferences.* (1) The Presiding Officer may hold conferences prior to or

during any hearing. The Presiding Officer shall direct the Hearing Clerk to notify all parties of the time and location of any conference. At the discretion of the Presiding Officer, persons other than parties may attend. At a conference the Presiding Officer may:

(i) Obtain stipulations and admissions, receive requests, order depositions to be taken, identify disputed issues of fact and law, and require or allow the submission of written testimony from any witness or party;

(ii) Set a hearing schedule for as many of the following as he considers necessary:

(A) Oral and written statements;

(B) Submission of written direct testimony as required or authorized by the Presiding Officer;

(C) Oral direct and cross-examination of a witness where necessary as prescribed in paragraph (p) of this section; and

(D) Oral argument, if appropriate;

(iii) Identify matters of which official notice may be taken;

(iv) Consider limitation of the number of expert and other witnesses;

(v) Consider the procedure to be followed at the hearing; and

(vi) Consider any other matter that may expedite the hearing or aid in the disposition of the issue.

(2) The Presiding Officer shall summarize in writing the results of any conference, including all stipulations, if not transcribed, and shall make the summary part of the record.

(l) *Primary discovery (exchange of witness lists and documents).* (1) At a prehearing conference or within some reasonable time set by the Presiding Officer prior to the hearing, each party shall make available to the other parties the names of the expert and other witnesses the party expects to call, together with a brief summary of their expected testimony and a list of all documents and exhibits which the party expects to introduce into evidence. Thereafter, witnesses, documents, or exhibits may be added and summaries of expected testimony amended upon motion by a party.

(2) The Presiding Officer, may, upon motion by a party or other person, and for good cause shown, by order:

(i) Restrict or defer disclosure by a party of the name of a witness or a narrative summary of the expected testimony of a witness; and

(ii) Prescribe other appropriate measures to protect a witness.

(3) Any party affected by an action in paragraph (l)(2) of this section shall have an adequate opportunity, once he learns the name of a witness and obtains the narrative summary of his expected testimony, to prepare for the presentation of his case.

(m) *Other discovery.* (1) Except as provided by paragraph (m)(1) of this section, further discovery, under this paragraph is permitted only upon determination by the Presiding Officer:

(i) That this discovery will not in any way unreasonably delay the proceeding;

(ii) That the information to be obtained is not obtainable voluntarily; and

(iii) That the information has significant probative value. The Presiding Officer shall be guided by the procedures set forth in the Federal Rules of Civil Procedure, where practicable, and the precedents thereunder, except that no discovery will be undertaken except upon order of the Presiding Officer or upon agreement of the parties.

(2) The Presiding Officer shall order depositions upon oral questions only upon a showing of good cause and upon a finding that:

(i) The information sought cannot be obtained by alternative methods; or

(ii) There is a substantial reason to believe that relevant and probative evidence may otherwise not be preserved for presentation by a witness at the hearing.

(3) Any party to the proceeding desiring an order of discovery shall make a motion or motions therefor. The motion must include:

(i) The circumstances warranting the taking of the discovery;

(ii) The nature of the information expected to be discovered; and

(iii) The proposed time and place where it will be taken. If the Presiding Officer determines the motion should be granted, he shall issue an order for the taking of the discovery together with the conditions and terms thereof.

(4) Failure to comply with an order issued pursuant to this paragraph may lead to the inference that the information to be discovered would be adverse to the person or party from whom the information was sought.

(n) *Protective orders, in camera proceedings.* (1) Upon motion by a part or by the person from whom discovery is sought, and upon a showing by the movant that the disclosure of the information to be discovered, or a particular part thereof (other than emission data), would result in methods or processes entitled to protection as trade secrets of the person being divulged, the Presiding Officer may enter a protective order with respect to this material. Any protective order will contain terms governing the treatment of the information which are appropriate under the circumstances to prevent disclosure outside the hearing: *Provided,* That the order states that the material will be filed separately from other evidence and exhibits in the hearing. Disclosure is limited to parties to the hearing, their counsel and relevant technical consultants, and authorized representatives of the United States concerned with carrying out the Act. Except in the case of the government, disclosure may be limited to counsel for parties who shall not disclose such information to the parties themselves. Except in the case of the government, disclosure to a party or his counsel is conditioned on execution of a sworn statement that no disclosure of the information will be made to persons not entitled to receive it under the terms of the protective order. (This provision is not necessary where government employees are concerned because disclosure by them is subject to the terms of 18 U.S.C. 1905.)

(2)(i) A party or person seeking a protective order may be permitted to make all or part of the required showing in camera. A record will be made of the in camera proceedings. If the Presiding Officer enters a protective order following a showing in camera, the record of the showing will be sealed and preserved and made available to the Agency or court in the event of appeal.

(ii) Attendance at any in camera proceeding may be limited to the Presiding Officer, the Agency, and the person or party seeking the protective order.

(3) Any party, subject to the terms and conditions of any protective order issues pursuant to paragraph (n)(1) of this section, desiring for the presentation of his case to make use of any in camera documents or testimony, shall make application to the Presiding Officer by motion setting forth the justification therefor. The Presiding Officer, in granting this motion, shall enter an order protecting the rights of the affected persons and parties and preventing unnecessary disclosure of this information, including the presentation of the information and oral testimony and cross-examination concerning it in executive session, as in his discretion is necessary and practicable.

(4) In the submittal of proposed findings, briefs, or other papers, counsel for all parties shall make a good faith attempt to refrain from disclosing the specific details of in camera documents and testimony. This shall not preclude references in these proposed findings, briefs, or other papers to the documents or testimony, including generalized statements based on their contents. To the extent that counsel considers it necessary to include specific details in their presentations, these details will be incorporated in separate proposed findings, briefs, or other paper marked ''confidential'', and wil become part of the in camera record.

(o) *Motions.* (1) All motions, except those made orally during the course of the hearing, must be in writing and state with particularity the grounds therefor, set forth the relief or order sought, and be filed with the Hearing Clerk and served upon all parties.

(2) Within the time fixed by the Environmental Appeals Board or the Presiding Officer, as appropriate, any party may serve and file an answer to the motion. The movant shall, if requested by the Environmental Appeals Board or the Presiding Officer, as appropriate, serve and file reply papers within the time set by the request.

(3) The Presiding Officer shall rule upon all motions filed or made prior to the filing of his decision or accelerated decision, as appropriate. The Environmental Appeals Board shall rule upon

all motions filed prior to the appointment of a Presiding Officer and all motions filed after the filing of the decision of the Presiding Officer or accelerated decision. Oral argument of motions will be permitted only if the Presiding Officer or the Environmental Appeals Board, as appropriate, considers it necessary.

(p) *Evidence.* (1) The official transcripts and exhibits, together with all papers and requests filed in the proceeding, consitute the record. Immaterial or irrelevant part of an admissible document will be segregated and excluded so far as practicable. Documents or parts thereof subject to a protective order under pargarph (n) of this section wil be segregated. Evidence may be received at the hearing even though inadmissible under the rules of evidence applicable to judicial proceedings. The weight to be given evidence will be determined by its reliability and probative value.

(2) The Presiding Officer shall allow the parties to examine and cross-examine a witness to the extent that this examination and cross-examination is necessary for a full and true disclosure of the facts.

(3) Ruling of the Presiding Officer on the admissibility of evidence, the propriety of examination and cross-examination, and other procedural matters will appear in the record.

(4) Parties shall automatically be presumed to have taken exception to an adverse ruling.

(q) *Record.* (1) Hearings will be stenographically reported and transcribed and the original transcripts will be part of the record and the sole official transcript. Copies of the record will be filed with the Hearing Clerk and made available during Agency business hours for public inspection. Any thereof, except as provided in paragraph (n) of this section, shall be entitled to the same upon payment of the cost thereof.

(2) The official transcripts and exhibits, together with all paper and requests filed in the proceeding, constitute the record.

(r) *Proposed findings, conclusions.* (1) Within four (4) days of the close of the reception of evidence, or within such longer time as the Presiding Officer may fix, any party may submit for the consideration of the Presiding Officer proposed findings of fact, conclusions of law, and proposed order, together with reasons therefor and briefs in support thereof. These proposals will be in writing, be served upon all parties, and contain adequate references to the record and authorities relied upon.

(2) The record will show the Presiding Officer's ruling on the proposed findings and conclusions except when his order disposing of the proceeding otherwise informs the parties of the action taken by him thereon.

(s) *Decision of the Presiding Officer.* (1) Unless extended by the Environmental Appeals Board, the Presiding Officer shall issue and file with the Hearing Clerk his decision within fourteen (14) days (or within seven (7) days in the case of a hearing requested under § 86.1012–84(1)) after the period for filing proposed findings as provided for in paragraph (r) of this section has expired.

(2) The Presiding Officer's decision shall become the decision of the Environmental Appeals Board:

(i) When no notice of intention to appeal as described in paragraphs (t) and (u) of this section is filed, ten (10) days after issuance thereof, unless in the interim the Environmental Appeals Board shall have acted to review or stay the effective date of the decision; or

(ii) When a notice of intention to appeal is filed but the appeal is not perfected as required by paragraphs (t) or (u) of this section, five (5) days after the period allowed for perfection of an appeal has expired unless within that five (5) day period, the Environmental Appeals Board shall have acted to review or stay the effective date of the decision.

(3) The Presiding Officer's decision must include a statement of findings and conclusions, as well as the reasons or basis therefor, upon all the material issues of fact or law presented on the record and an appropriate rule or order. The decision must be supported by substantial evidence and based upon a consideration of the whole record.

(4) At any time prior to the issuance of his decision, the Presiding Officer may reopen the proceeding for the reception of further evidence. Except for

the correction of clerical errors, the jurisdiction of the Presiding Officer is terminated upon the issuance of his decision.

(t) *Appeal from the decision of the Presiding Officer.* (1) Any party to a proceeding may appeal the Presiding Officer's decision to the Environmental Appeals Board; *Provided,* That within ten (10) days after issuance of the Presiding Officer's decision the party files a notice of intention to appeal and an appeal brief within twenty (20) days of the decision.

(2) When an appeal is taken from the decision of the Presiding Officer, any party may file a brief with respect to the appeal. The party shall file the brief within fifteen (15) days of the date of the filing of the appellant's brief.

(3) Any brief filed pursuant to this paragraph will contain, in the order indicated, the following:

(i) A subject index of the matter in the brief, with page references, and a table of cases (alphabetically arranged), textbooks, statutes, and other material cited, with page references thereto:

(ii) A specification of the issues intended to be urged; provided, however, that in the case of a hearing requested under § 86.1012–84(l), the brief will be restricted to the issues specified in paragraph (c)(2)(ii) of this section;

(iii) The argument presenting clearly the points of fact and law relied upon in support of the position taken on each issue, with specific page references to the record and the legal or other material relied upon; and

(iv) A proposed order for the Environmental Appeals Board's consideration if different from the order contained in the Presiding Officer's decision.

(4) No brief in excess of 40 pages will be filed without leave of the Environmental Appeals Board.

(5) The Environmental Appeals Board may allow oral argument.

(u) *Summary appeal.* (1) In the case of a hearing requested under § 86.1012–84(l), any appeal taken from the decision of the Presiding Officer will be conducted under this subsection.

(2) Any party to the proceeding may appeal the Presiding Officer's decision to the Environmental Appeals Board by filing a notice of appeal within ten (10) days.

(3) The notice of appeal must be in the form of a brief and conform to the requirements of paragraph (t)(3) of this section.

(4) Within ten (10) days after a notice of appeal from the decision of the Presiding Officer is filed under this paragraph, any party may file a brief with respect to that appeal.

(5) No brief in excess of fifteen (15) pages will be filed without leave of the Environmental Appeals Board.

(v) *Review of the Presiding Officer's decision in the absence of appeal.* (1) If after the expiration of the period for taking an appeal as provided for by paragraph (t) or (u) of this section, no notice of intention to appeal the decision of the Presiding Officer has been filed, or if filed, not perfected, the Hearing Clerk shall so notify the Environmental Appeals Board.

(2) The Environmental Appeals Board, upon receipt of notice from the Hearing Clerk that no notice of intention to appeal the decision of the Presiding Officer has been filed, or if filed, not perfected pursuant to paragraph (t) or (u) of this section, may, on its own motion, within the time limits specified in paragraph (s)(2) of this section, review the decision of the Presiding Officer. Notice of the intention of the Environmental Appeals Board to review the decision of the Presiding Officer shall be given to all parties and shall set forth the scope of such review and the issues to be considered and shall make provision for filing of briefs.

(w) *Decision of appeal or review.* (1) Upon appeal from or review of the Presiding Officer's decision, the Environmental Appeals Board shall consider such parts of the record as are cited or as may be necessary to resolve the issues presented and in addition shall, to the extent necessary or desirable, exercise all the powers which it could have exercised if it had presided at the hearing.

(2) In rendering its decision, the Environmental Appeals Board shall adopt, modify or set aside the findings, conclusions, and order contained in the decision of the Presiding Officer and shall set forth in its decision a statement of the reasons or basis for its action.

(3) In those cases where the Environmental Appeals Board determines that it should have further information or additional views of the parties as to the form and content of the rule or order to be issued, the Environmental Appeals Board, in its discretion, may withhold final action pending the receipt of such additional information or views, or may remand the case to the Presiding Officer.

(4) Any decision rendered under this paragraph which completes disposition of a case constitutes a final decision of the Environmental Appeals Board.

(x) *Reconsideration.* (1) Within twenty (20) days after issuance of the Environmental Appeals Board's decision, any party may file with the Environmental Appeals Board a petition for reconsideration of such decision, setting forth the relief desired and the grounds in support thereof. Any petition filed under this subsection must be confined to new questions raised by the decision or final order and upon which the petitioner had no opportunity to argue before the Presiding Officer or the Environmental Appeals Board; *Provided, however,* That in the case of a hearing requested under § 86.1012–84(1) such new questions shall be limited to the issues specified in paragraph (c)(2)(ii) of this section.

(2) Any party desiring to oppose this petition shall file an answer thereto within ten (10) days after the filing of the petition. The filing of a petition for reconsideration shall not operate to stay the effective date of the decision or order or to toll the running of any statutory time period affecting such decision or order unless specifically so ordered by the Environmental Appeals Board.

(y) *Accelerated decision, dismissal.* (1) The Presiding Officer, upon motion of any party or sua sponte, may at any time render an accelerated decision in favor of the Agency or the manufacturer as to all or any part of the proceeding, without further hearing or upon limited additional evidence such as affidavits which he may require, or dismiss any party with prejudice, for any of the following reasons:

(i) Failure to state a claim upon which relief can be granted, or direct or collateral estoppel;

(ii) The lack of any genuine issue of material fact, causing a party to be entitled to judgment as a matter of law; or

(iii) Such other reasons as are just, including specifically failure to obey a procedural order of the Presiding Officer.

(2) If, under this subsection, an accelerated decision is issued as to all the issues and claims joined in the proceeding, the decision will be treated for the purposes of these procedures as the decision of the Presiding Officer as provided in paragraph (s) of this section.

(3) If, under this subsection, judgment is rendered on less than all issues or claims in the proceeding, the Presiding Officer shall determine what material facts exist without substantial controversy and what material facts are actually and in good faith controverted. He shall thereupon issue an order specifying the facts which appear without substantial controversy, and the issues and claims upon which the hearing will proceed.

(z) *Conclusion of hearing.* (1) If, after the expiration of the period for taking an appeal as provided for by paragraphs (t) and (u) of this section, no appeal has been taken from the Presiding Officer's decision, and after the expiration of the period for review by the Environmental Appeals Board on its own motion as provided for by paragraph (v) of this section, the Environmental Appeals Board does not move to review such decision, the hearing is considered ended at the expiration of all periods allowed for the appeal and review.

(2) If an appeal of the Presiding Officer's decision is taken pursuant to paragraphs (t) and (u) of this section, or if, in the absence of this appeal, the Environmental Appeals Board moves to review the decision of the Presiding Officer pursuant to paragraph (v) of this section, the hearing is considered ended upon rendering of a final decision by the Environmental Appeals Board.

(aa) *Judicial review.* (1) The Administrator shall designate the General Counsel, Environmental Protection Agency as the officer upon whom copy of any petition for judicial review must be served. This officer shall be responsible for filing in the court the record

of which the order of the Environmental Appeals Board is based.

(2) Before forwarding the record to the court, the Agency shall advise the petitioner of costs of preparing it and as soon as payment to cover fees is made, shall forward the record to the court.

[45 FR 63772, Sept. 25, 1980, as amended at 50 FR 35387, Aug. 30, 1985; 57 FR 5332, Feb. 13, 1992]

§86.1014–97 Hearings on suspension, revocation and voiding of certificates of conformity.

Section 86.1014–97 includes text that specifies requirements that differ from those specified in §86.1014–84. Where a paragraph in §86.1014–84 is identical and applicable to §86.1014–97, this may be indicated by specifying the corresponding paragraph and the statement ''[Reserved]. For guidance see §86.1014–84''.

(a) through (c)(2)(ii) introductory text [Reserved]. For guidance see §86.1014–84.

(c)(2)(ii)(A) Whether tests have been properly conducted, specifically, whether the tests were conducted in accordance with applicable regulations and whether test equipment was properly calibrated and functioning; and

(c)(2)(ii) (B) through (aa) [Reserved]. For guidance see §86.1014–84.

[62 FR 31241, June 6, 1997]

§86.1015 Treatment of confidential information.

(a) Any manufacturer may assert that some or all of the information submitted pursuant to this subpart is entitled to confidential treatment as provided by 40 CFR part 2, subpart B.

(b) Any claim of confidentiality must accompany the information at the time it is submitted to EPA.

(c) To assert that information submitted pursuant to this subpart is confidential, a manufacturer must indicate clearly the items of information claimed confidential by marking, circling, bracketing, stamping, or otherwise specifying the confidential information. Furthermore, EPA requests, but does not require, that the submitter also provide a second copy of its submittal from which all confidential information has been deleted. If a need arises to publicly release nonconfidential information, EPA will assume that the submitter has accurately deleted the confidential information from this second copy.

(d) If a claim is made that some or all of the information submitted pursuant to this subpart is entitled to confidential treatment, the information covered by that confidentiality claim will be disclosed by the Environmental Appeals Board only to the extent and by means of the procedures set forth in part 2, subpart B, of this chapter.

(e) Information provided without a claim of confidentiality at the time of submission may be made available to the public by EPA without further notice to the submitter, in accordance with 40 CFR 2.204(c)(2)(i)(A).

[50 FR 34798, Aug. 27, 1985, as amended at 57 FR 5333, Feb. 13, 1992; 57 FR 30657, July 10, 1992]

Subpart L—Nonconformance Penalties for Gasoline-Fueled and Diesel Heavy-Duty Engines and Heavy-Duty Vehicles, Including Light-Duty Trucks

SOURCE: 50 FR 35388, Aug. 30, 1985, unless otherwise noted.

§86.1101–87 Applicability.

The provisions of this subpart are applicable for 1987 and later model year gasoline-fueled and diesel heavy-duty engines and heavy-duty vehicles. These vehicles include light-duty trucks rated in excess of 6,000 pounds gross vehicle weight.

§86.1102–87 Definitions.

(a) The definitions in this section apply to this subpart.

(b) As used in this subpart, all terms not defined herein have the meaning given them in the Act.

Compliance level means the deteriorated pollutant emissions level at the 60th percentile point for a population of heavy-duty engines or heavy-duty vehicles subject to Production Compliance Audit testing pursuant to the requirements of this subpart. A compliance level for a population can only be determined for a pollutant for which an

upper limit has been established in this subpart.

Configuration means a subdivision, if any, of a heavy-duty engine family for which a separate projected sales figure is listed in the manufacturer's Application for Certification and which can be described on the basis of emission control system, governed speed, injector size, engine calibration, or other parameters which may be designated by the Administrator, or a subclassification of light-duty truck engine family emission control system combination on the basis of engine code, inertia weight class, transmission type and gear ratios, rear axle ratio, or other parameters which may be designated by the Administrator.

NCP means a nonconformance penalty as described in section 206(g) of the Clean Air Act and in this subpart.

PCA means Production Compliance Audit as described in § 86.1106–87 of this subpart.

Subclass means a classification of heavy-duty engines of heavy-duty vehicles based on such factors as gross vehicle weight rating, fuel usage (gasoline-, diesel-, and methanol-fueled), vehicle usage, engine horsepower or additional criteria that the Administrator shall apply. Subclasses include, but are not limited to:

(i) Light-duty gasoline-fueled Otto cycle trucks (6,001–8,500 lb. GVW)

(ii) Light-duty methanol-fueled Otto cycle trucks (6,001–8,500 lb. GVW)

(iii) Light-duty petroleum-fueled diesel trucks (6,001–8,500 lb. GVW)

(iv) Light-duty methanol-fueled diesel trucks (6,001–8,500 lb. GVW)

(v) Light heavy-duty gasoline-fueled Otto cycle engines (for use in vehicles of 8,501–14,000 lb. GVW)

(vi) Light heavy-duty methanol-fueled Otto cycle engines (for use in vehicles of 8,501–14,000 lb. GVW)

(vii) Heavy heavy-duty gasoline-fueled Otto cycle engines (for use in vehicles of 14,001 lb and above GVW)

(viii) Heavy heavy-duty methanol-fueled Otto cycle engines (for use in vehicles of 14,001 lb. and above GVW)

(ix) Light heavy-duty petroleum-fueled diesel engines (see § 86.085–2(a)(1))

(x) Light heavy-duty methanol-fueled diesel engines (see § 86.085–2(a)(1))

(xi) Medium heavy-duty petroleum-fueled diesel engines (see § 86.085–2(a)(2))

(xii) Medium heavy-duty methanol-fueled diesel engines (see § 86.085–2(a)(2))

(xiii) Heavy heavy-duty petroleum-fueled diesel engines (see § 86.085–2(a)(3))

(xiv) Heavy heavy-duty methanol-fueled diesel engines (see § 86.085–2(a)(3))

(xv) Petroleum-fueled Urban Bus engines (see § 86.091–2)

(xvi) Methanol-fueled Urban Bus engines (see § 86.091–2).

For NCP purposes, all optionally certified engines and/or vehicles (engines certified in accordance with § 86.087–10(a)(3) and vehicles certified in accordance with § 86.085–1(b)) shall be considered part of, and included in the FRAC calculation of, the subclass for which they are optionally certified.

Test Sample means a group of heavy-duty engines or heavy-duty vehicles of the same configuration which have been selected for emission testing.

Upper limit means the emission level for a specific pollutant above which a certificate of conformity may not be issued or may be suspended or revoked.

[50 FR 35388, Aug. 30, 1985, as amended at 55 FR 46628, Nov. 5, 1990]

§ 86.1103–87 Criteria for availability of nonconformance penalties.

(a) EPA shall establish for each subclass of heavy-duty engines and heavy-duty vehicles (other than motorcycles), an NCP for a motor vehicle pollutant, when any new or revised emission standard is more stringent than the previous standard for the pollutant, or when an existing standard for that pollutant becomes more difficult to achieve because of a new or revised standard, provided that EPA finds:

(1) That for such subclass of engines or vehicles, substantial work will be required to meet the standard for which the NCP is offered, and

(2) That there is likely to be a technological laggard.

(b) Substantial work, as used in paragraph (a)(1) of this section, means the application of technology not previously used in an engine or vehicle class or subclass, or the significant

modification of existing technology or design parameters, needed to bring the vehicle or engine into compliance with either the more stringent new or revised standard or an existing standard which becomes more difficult to achieve because of a new or revised standard.

§86.1104–91 Determination of upper limits.

(a) The upper limit applicable to a pollutant emission standard for a subclass of heavy-duty engines or heavy-duty vehicles for which an NCP is established in accordance with §86.1103–87, shall be the previous pollutant emission standard for that subclass.

(b) If no previous standard existed for the pollutant under paragraph (a) of this section, the upper limit will be developed by EPA during rulemaking.

(c) If a manufacturer participates in any of the emissions averaging, trading, or banking programs, and carries over certification of an engine family from the prior model year, the upper limit for that engine family shall be the family emission limit of the prior model year, unless the family emission limit is less than the upper limit determined in paragraph (a) of this section.

[55 FR 30629, July 26, 1990]

§86.1105–87 Emission standards for which nonconformance penalties are available.

(a)–(b) [Reserved]

(c) Effective in the 1991 model year, NCPs will be available for the following additional emission standards:

(1) [Reserved]

(2) Petroleum-fueled diesel heavy-duty engine oxides of nitrogen standard of 5.0 grams per brake horsepower-hour.

(i) For petroleum-fueled light heavy-duty diesel engines:

(A) The following values shall be used to calculate an NCP in accordance with §86.1113–87(a):

(*1*) COC_{50}: $830.

(*2*) COC_{90}: $946.

(*3*) MC_{50}: $1,167 per gram per brake horsepower-hour.

(*4*) F: 1.2.

(B) The following factor shall be used to calculate the engineering and development component of the NCP in accordance with §86.1113–87(h): 0.12.

(ii) For petroleum-fueled medium heavy-duty diesel engines:

(A) The following values shall be used to calculate an NCP in accordance with §86.1113–87(a):

(*1*) COC_{50}: $905.

(*2*) COC_{90}: $1,453.

(*3*) MC_{50}: $1,417 per gram per brake horsepower-hour.

(*4*) F: 1.2.

(B) The following factor shall be used to calculate the engineering and development component of the NCP in accordance with §86.1113–87(h): 0.11.

(iii) For petroleum-fueled heavy-duty diesel engines:

(A) The following values shall be used to calculate an NCP in accordance with §86.1113–87(a):

(*1*) COC_{50}: $930.

(*2*) COC_{90}: $1,590.

(*3*) MC_{50}: $2,250 per gram per brake horsepower-hour.

(*4*) F: 1.2.

(B) The following factor shall be used to calculate the engineering and development component of the NCP in accordance with §86.1113–87(h): 0.11.

(3) Petroleum-fueled diesel light-duty trucks (between 6,001 and 14,000 lbs GVW) particulate matter emission standard of 0.13 grams per vehicle mile.

(i) The following values shall be used to calculate an NCP in accordance with §86.1113–87(a):

(A) COC_{50}: $711.

(B) COC_{90}: $1,396.

(C) MC_{50}: $2,960 per gram per brake horsepower-hour.

(D) F: 1.2.

(ii) The following factor shall be used to calculate the engineering and development component of the NCP in accordance with §86.1113–87(h): 0.01.

(d) Effective in the 1993 model year, NCPs will be available for the following additional emission standard:

(1) Petroleum-fueled diesel bus engine (as defined in §86.093–2) particulate emission standard of 0.10 grams per brake horsepower-hour.

(i) The following values shall be used to calculate an NCP for the standard set forth in §86.093–11(a)(1)(iv)(A) in accordance with §86.1113–87(a):

(A) COC_{50}: $4,020.

(B) COC_{90}: $4,535.

(C) MC_{50}: $22,971 per gram per brake horsepower-hour.

(D) F: 1.2.

(E) UL: 0.25 grams per brake horsepower-hour.

(ii) The following factor shall be used to calculate the engineering and development component of the NCP for the standard set forth in § 86.093–11(a)(1)(iv)(A) in accordance with § 86.1113–87(h): 0.02.

(2) [Reserved]

(e) The values of COC_{50}, COC_{90}, and MC_{50} in paragraphs (a) and (b) of this section are expressed in December 1984 dollars. The values of COC_{50}, COC_{90}, and MC_{50} in paragraphs (c) and (d) of this section are expressed in December 1989 dollars. The values of COC_{50}, COC_{90}, and MC_{50} in paragraph (f) of this section are expressed in December 1991 dollars. The values of COC_{50}, COC_{90}, and MC_{50} in paragraphs (g) and (h) of this section are expressed in December 1994 dollars. These values shall be adjusted for inflation to dollars as of January of the calendar year preceding the model year in which the NCP is first available by using the change in the overall Consumer Price Index, and rounded to the nearest whole dollar in accordance with ASTM E29–67 (reapproved 1980), Standard Recommended Practice for Indicating Which Places of Figures are to be Considered Significant in Specified Limiting Values. The method was approved by the director of the Federal Register in accordance with 5 U.S.C. 552(a) and 1 CFR part 51. This document is available from ASTM, 1916 Race Street, Philadelphia, PA 19103, and is also available for inspection as part of Docket A–91–06, located at the Central Docket Section, EPA, 401 M Street, SW, Washington, DC or at the office of the Federal Register, 800 North Capitol Street, NW, suite 700, Washington, DC. This incorporation by reference was approved by the Director of the Federal Register on January 13, 1992. These materials are incorporated as they exist on the date of the approval and a notice of any change in these materials will be published in the FEDERAL REGISTER.

(f) Effective in the 1994 model year, NCPs will be available for the following emission standards:

(1) Petroleum-fueled urban bus engine (as defined in § 86.091–2) particulate emission standard of 0.07 grams per brake horsepower-hour.

(i) The following values shall be used to calculate an NCP for the standard set forth in § 86.094–11(a)(1)(iv)(A) in accordance with § 86.1113–87(a):

(A) COC_{50}: $3292.

(B) COC_{90}: $10,014.

(C) MC_{50}: $109,733.

(D) F: 1.2.

(ii) The following factor shall be used to calculate the engineering and development component of the NCP for the standard set forth in § 86.094–11(a)(1)(iv)(A) in accordance with § 86.1113–87(h): 0.38.

(2) Petroleum-fueled diesel heavy-duty engine particulate matter emission standard of 0.10 grams per brake horsepower-hour.

(i) For petroleum-fueled light heavy-duty diesel engines:

(A) The following values shall be used to calculate an NCP in accordance with § 86.1113–87(a):

(*1*) COC_{50}: $772.

(*2*) COC_{90}: $1,325.

(*3*) MC_{50}: $8,178 per gram per brake horsepower-hour.

(*4*) F: 1.2.

(B) The following factor shall be used to calculate the engineering and development component of the NCP in accordance with § 86.1113–87(h): 0.081.

(ii) For petroleum-fueled medium heavy-duty diesel engines:

(A) The following values shall be used to calculate an NCP in accordance with § 86.1113–87(a):

(*1*) COC_{50}: $1,276.

(*2*) COC_{90}: $3,298.

(*3*) MC_{50}: $15,370 per gram per brake horsepower-hour.

(*4*) F: 1.2.

(B) The following factor shall be used to calculate the engineering and development component of the NCP in accordance with § 86.1113–87(h): 0.098.

(iii) For petroleum-fueled heavy heavy-duty diesel engines:

(A) The following values shall be used to calculate an NCP in accordance with § 86.1113–87(a):

(*1*) COC_{50}: $2,105.

(*2*) COC_{90}: $6,978.

(*3*) MC_{50}: $30,070 per gram per brake horsepower-hour.

(*4*) F: 1.2.

(B) The following factor shall be used to calculate the engineering and development component of the NCP in accordance with § 86.1113-87(h): 0.083.

(g) Effective in the 1996 model year, NCPs will be available for the following emission standard:

(1) Light-duty truck 3 diesel-fueled vehicle at full useful life (as defined in § 86.094–2) particulate matter emission standard of 0.10 g/mi.

(i) The following values shall be used to calculate an NCP for the standard set forth in § 86.094–9(a)(1)(ii) in accordance with § 86.1113–87(a):

(A) COC_{50}: $441.

(B) COC_{90}: $1,471.

(C) MC_{50}: $14,700 per gram per mile.

(D) F: 1.2.

(ii) The following factor shall be used to calculate the engineering and development component of the NCP for the standard set forth in § 86.094–9(a)(1)(ii) in accordance with § 86.1113–87(h): 0.093.

(2) Light-duty truck 3 diesel-fueled vehicle at full useful life (as defined in § 86.094–2) oxides of nitrogen emission standard of 0.98 g/mi.

(i) The following values shall be used to calculate an NCP for the standard set forth in § 86.094–9(a)(1)(ii) in accordance with § 86.1113–87(a):

(A) COC_{50}: $654.

(B) COC_{90}: $779.

(C) MC_{50}: $908 per gram per mile.

(D) F: 1.2.

(ii) The following factor shall be used to calculate the engineering and development component of the NCP for the standard set forth in § 86.094–9(a)(1)(ii) in accordance with § 86.1113–87(h): 0.082.

(3) 1996 Urban Bus (as defined in § 86.094–2) particulate matter emission standard of 0.05 g/BHp-hr.

(i) The following values shall be used to calculate an NCP for the standard set forth in § 86.094–9(a)(1)(ii) in accordance with § 86.1113–87(a):

(A) COC_{50}: $576.

(B) COC_{90}: $6,569.

(C) MC_{50}: $28,800 per gram per brake horsepower-hour.

(D) F: 1.2.

(ii) The following factor shall be used to calculate the engineering and development component of the NCP for the standard set forth in § 86.094–9(a)(1)(ii) in accordance with § 86.1113–87(h): 0.500.

(h) Effective in the 1998 model year, NCPs will be available for the following emission standard:

(1) Petroleum-fueled diesel heavy-duty engine oxides of nitrogen standard of 4.0 grams per brake horsepower-hour.

(i) For petroleum-fueled light heavy-duty diesel engines:

(A) The following values shall be used to calculate an NCP in accordance with § 86.1113–87(a):

(*1*) COC_{50}: $833.

(*2*) COC_{90}: $1,513.

(*3*) MC_{50}: $833 per gram per brake horsepower-hour.

(*4*) F: 1.2.

(B) The following factor shall be used to calculate the engineering and development component of the NCP for the standard set forth in § 86.094–9(a)(1)(ii) in accordance with § 86.1113–87(h): 0.039.

(ii) For petroleum-fueled medium heavy-duty diesel engines:

(A) The following values shall be used to calculate an NCP in accordance with § 86.1113–87(a):

(*1*) COC_{50}: $444.

(*2*) COC_{90}: $1,368.

(*3*) MC_{50}: $444 per gram per brake horsepower-hour.

(*4*) F: 1.2.

(B) The following factor shall be used to calculate the engineering and development component of the NCP for the standard set forth in § 86.094–9(a)(1)(ii) in accordance with § 86.1113–87(h): 0.043.

(iii) For petroleum-fueled heavy heavy-duty diesel engines:

(A) The following values shall be used to calculate an NCP in accordance with § 86.1113–87(a):

(*1*) COC_{50}: $1,086.

(*2*) COC_{90}: $2,540.

(*3*) MC_{50}: $1,086 per gram per brake horsepower-hour

(*4*) F: 1.2.

(B) The following factor shall be used to calculate the engineering and development component of the NCP for the standard set forth in § 86.094–9(a)(1)(ii) in accordance with § 86.1113–87(h): 0.039.

(2) [Reserved]

[50 FR 53466, Dec. 31, 1985, as amended at 52 FR 47870, Dec. 16, 1987; 53 FR 43878, Oct. 31, 1988; 56 FR 64712, Dec. 12, 1991; 58 FR 15802, Mar. 24, 1993; 58 FR 68540, Dec. 28, 1993; 60 FR 33925, June 29, 1995; 61 FR 6949, 6953, Feb. 23, 1996]

§ 86.1106–87 Production compliance auditing.

For a model year in which upper limits for heavy-duty engine or heavy-duty vehicle emission standards for one or more exhaust pollutants are specified in § 86.1105–87, a manufacturer may elect to conduct a Production Compliance Audit (PCA) for each engine or vehicle configuration satisfying the following conditions:

(a) Certification test results, pursuant to § 86.082–23, exceed the emission standard for a particular pollutant but do not exceed the upper limit established for that pollutant. In that event, the manufacturer will be offered a qualified certificate of conformity allowing for the introduction into commerce of the specified engine family, *Provided*, That:

(1) The manufacturer must agree to conduct a PCA of those engines or vehicles;

(2) PCA testing must be conducted on the same configurations that exceeded the standard in certification. In lieu of that requirement, the Administrator may approve testing of a greater or lesser number of configurations provided the manufacturer agrees to pay the NCP determined from the CL of each tested configuration for that configuration and for other non-tested configurations that have similar emission characteristics. If an acceptable showing of similar emission characteristics is not made, the highest CL of the configurations tested will apply to all non-tested configurations exceeding the standard.

(3) The selection of engines or vehicles for PCA testing must be initiated no later than five (5) days after the start of assembly-line production of the specified engine or vehicle configuration, unless that period is extended by the Administrator;

(4) The manufacturer must agree:

(i) To pay the NCP amount calculated as a result of PCA testing on each engine or vehicle, unless the manufacturer successfully challenges the Administrator's determination of the compliance level or penalty calculation or both under § 86.1115–87(c);

(ii) To recall any engines or vehicles introduced into commerce, without invoking the procedural requirements of section 207(c) of the Clean Air Act, if the compliance level for the engine or vehicle configuration of (a)(2) exceeds the upper limit as determined by the PCA;

(5) If the compliance level determined in the PCA is below the emission standard, no NCP will be offered, and all appropriate qualifications will be removed from the qualified certificate of conformity.

(b) An engine or vehicle configuration fails a Selective Enforcement Audit (SEA) under subpart K of 40 CFR part 86 with respect to the standard for a particular pollutant but does not fail with respect to the upper limit established for that pollutant, and no NCP has been previously assessed for that configuration, *Provided*, That:

(1) The manufacturer must submit a written report to the Administrator within five (5) days after failure to pass the audit containing the following:

(i) A statement that the manufacturer does not intend, at that time, to make any engine and/or emission control system design changes that may remedy the nonconformity; and

(ii) A request from the manufacturer to conduct the PCA, including the date the testing will begin;

(2) Failure to submit the report within five (5) days after the SEA failure will result in the forfeiture of the NCP option, unless a satisfactory justification for the delay is provided to the Administrator;

(3) The selection of any required engines or vehicles for PCA testing must be initiated no later than ten (10) days after the SEA failure unless extended by the Administrator; otherwise, the manufacturer may forfeit the option to elect an NCP;

(4) PCA testing must be conducted on the same configuration that failed the SEA;

(5) Test results from the SEA, together with any additional test results required during the PCA, will be used in establishing a compliance level for the configuration pursuant to § 86.1112–87(a); and

(6) The manufacturer, upon approval by the Administrator to conduct a PCA on a failed SEA engine or vehicle configuration, must agree:

(i) To pay the NCP amount calculated as a result of PCA testing on each engine or vehicle introduced into commerce after the tenth day of the SEA failure, unless the manufacturer successfully challenges the Administrator's determination of the compliance level or penalty calculation or both under § 86.1115–87(c);

(ii) To recall any engines or vehicles introduced into commerce after the tenth day of the SEA failure, without invoking the procedural requirements of section 207(c) of the Clean Air Act, if the compliance level of the engine or vehicle configuration exceeds the upper limit as determined by the PCA.

(c) An engine or vehicle configuration, for which an NCP has been previously assessed for a particular pollutant, either passes an SEA with respect to the particular pollutant standard, fails an SEA with respect to the particular pollutant standard but not the previous compliance level, or fails an SEA with respect to the previous compliance level but not the associated upper limit, *Provided,* That:

(1) The manufacturer must submit a written statement to the Administrator within five (5) days of the conclusion of the SEA requesting a PCA, including the date the PCA testing will begin; otherwise, the manufacturer forfeits the option to establish a new compliance level;

(2) The selection of any required engines or vehicles for PCA testing must be initiated no later than ten (10) days after the conclusion of the SEA unless the period is extended by the Administrator; otherwise, the manufacturer forfeits the option to establish a new compliance level;

(3) PCA testing must be conducted on the same configuration tested during the SEA, and all conditions in the SEA test order must apply to the PCA;

(4) Test results for the SEA, together with any additional test results required during the PCA, will be used in establishing a new compliance level for the configuration pursuant to § 86.1112–87(a);

(5) The manufacturer must agree:

(i) To pay the NCP amount calculated as a result of PCA testing on each engine or vehicle introduced into commerce after the tenth day of the conclusion of the SEA, unless the manufacturer successfully challenges the Administrator's determination of the compliance level or penalty calculation or both under § 86.1115–87(c);

(ii) To recall any engines or vehicles introduced into commerce after the tenth day after the conclusion of the SEA, without invoking the procedural requirements of section 207(c) of the Clean Air Act, if the engine or vehicle configuration exceeds the upper limit as determined by the PCA;

(6) A previously assessed NCP will be terminated and no NCP will be established as a result of the new PCA if the compliance level is determined to be below the applicable emission standards.

(d) The implementation of a production running change that causes the emission level for a particular pollutant to be either above the emission standard but below the associated upper limit for a vehicle or engine configuration for which an NCP has not been previously assessed, or below the associated upper limit for a vehicle or engine configuration for which an NCP has been previously assessed, regardless of the previous compliance level. In that event, the manufacturer will be offered a qualified certificate of conformity allowing for the introduction into commerce of the engine or vehicle configuration resulting from the running change, *Provided*, That:

(1) The manufacturer must submit a written report to the Administrator outlining the reason for the running change and the date the manufacturer will begin PCA testing;

(2) The manufacturer must agree:

(i) To pay the NCP amount calculated as a result of PCA testing on each engine or vehicle, unless the manufacturer successfully challenges the Administrator's determination of compliance level or penalty calculation or both under § 86.1115–87(c);

(ii) To recall any engines or vehicles introduced into commerce, without invoking the procedural requirements of section 207(c) of the Clean Air Act, if the engine or vehicle configuration exceeds the upper limit as determined by the PCA;

(3) The selection of engines or vehicles for PCA testing must be initiated

no later than five (5) days after the start of assembly line production of the engine or vehicle configuration resulting from the running change unless that period is extended by the Administrator; and

(4) If the compliance level is determined to be below the applicable emission standard, a previously assessed NCP will be terminated, an NCP will not be established as a result of the PCA testing, and all qualifications will be removed from the qualified certificate of conformity.

(e) The following requirements are applicable to each PCA under this subpart.

(1) The manufacturer shall make the following documents available to EPA Enforcement Officers upon request;

(i) A properly filed and current application for certification, following the format prescribed by the EPA for the appropriate model year; and

(ii) A copy of the shop manual and dealer service bulletins for the configurations being tested.

(2) Only one mechanic at a time per engine or vehicle shall make authorized checks, adjustments, or repairs, unless a particular check, adjustment, or repair requires a second mechanic as indicated in the shop manual or dealer service bulletins.

(3) A mechanic shall not perform any check, adjustment, or repair without an Enforcement Officer present unless otherwise authorized.

(4) The manufacturer shall utilize only those tools and test equipment utilized by its dealers or those dealers using its engines when performing authorized checks, adjustments, or repairs.

[50 FR 35388, Aug. 30, 1985, as amended at 58 FR 68540, Dec. 28, 1993]

§ 86.1107–87 Testing by the Administrator.

(a) The Administrator may require that engines or vehicles of a specified configuration be selected in a manner consistent with the requirements of § 86.1110–87 and submitted to him at such place as he may designate for the purpose of conducting emission tests in accordance with § 86.1111–87 to determine whether engines or vehicles manufactured by the manufacturer conform with the regulations of this subpart.

(b)(1) Whenever the Administrator conducts a test on a test engine or vehicle or the Administrator and manufacturer each conduct a test on the same test engine or vehicle, the results of the Administrator's test will comprise the official data for that engine or vehicle.

(2) Whenever the manufacturer conducts all tests on a test engine or vehicle, the manufacturer's test data will be accepted as the official data, provided that if the Administrator makes a determination based on testing under paragraph (a) of this section that there is a substantial lack of agreement between the manufacturer's test results and the Administrator's test results, no manufacturer's test data from the manufacturer's test facility will be accepted for purposes of this subpart.

(c) If the Administrator determines that testing conducted under paragraph (a) of this section demonstrates a lack of agreement under paragraph (b)(2) of this section, the Administrator shall:

(1) Notify the manufacturer in writing of his determination that the manufacturer's test facility is inappropriate for conducting the tests required by this subpart and the reasons therefore; and

(2) Reinstate any manufacturer's data only upon a showing by the manufacturer that the data acquired under paragraph (a) of this section was erroneous and the manufacturer's data was correct.

(d) The manufacturer may request in writing that the Administrator reconsider his determination in paragraph (b)(2) of this section based on data or information which indicates that changes have been made to the test facility and that these changes have resolved the reasons for disqualification.

§ 86.1108–87 Maintenance of records.

(a) The manufacturer of any new gasoline-fueled or diesel heavy-duty engine or heavy-duty vehicle subject to any of the provisions of this subpart shall establish, maintain, and retain the following adequately organized and indexed records:

(1) *General records.* A description of all equipment used to test engines or vehicles in accordance with §86.1111–87, pursuant to PCA testing under this subpart, specifically;

(i) If testing heavy-duty gasoline engines, the equipment requirements specified in §§86.1306–84 and 86.1506–84 of this part.

(ii) If testing heavy-duty diesel engines, the equipment requirements specified in §§86.1306–84, 86.1506–84, 86.879–6, 86.879–8 and 86.879–9 of this part;

(iii) If testing light-duty gasoline-fueled trucks, the equipment requirements specified in §§86.106 (excluding all references to particulate emission testing) and 86.1506–84 of this part; and

(iv) If testing light-duty diesel trucks, the equipment requirements specified in §86.106 (excluding all references to evaporative emission testing) of this part.

(2) *Individual records.* These records pertain to each Production Compliance Audit conducted pursuant to this subpart.

(i) The date, time, and location of each test;

(ii) The number of hours of service accumulated on the engine or the number of miles on the vehicle when the test began and ended;

(iii) The names of all supervisory personnel involved in the conduct of the Production Compliance Audit;

(iv) A record and description of any repair performed, giving the date and time of the repair, the reason for it, the person authorizing it, and the names of all personnel involved in the supervision and performance of the repair;

(v) The date when the engine or vehicle was shipped from the assembly plant or associated storage facility and when it was received at the testing facility;

(vi) A complete record of all emission tests performed pursuant to this subpart (except tests performed by EPA directly), including all individual worksheets and/or other documentation relating to each test, or exact copies thereof, specifically—

(A) If testing heavy-duty gasoline engines, the record requirements specified in §§86.1342–84 and 86.1542–84 of this part;

(B) If testing heavy-duty diesel engines, the record requirements specified in §§86.1342–84, 86.1542–84, and §86.879–10; (§86.337–79 for subpart D testing only).

(C) If testing light-duty gasoline fueled trucks, the record requirements specified in §§86.142 (excluding all references to diesel vehicles) and 86.1542–84; and

(D) If the testing light-duty diesel trucks, the record requirements specified in §86.142; and

(vii) A brief description of any significant Production Compliance Audit events commencing with the test engine or vehicle selection process, but not described by any subparagraph under paragraph (a)(2) of this section, including such extraordinary events as engine damage during shipment or vehicle accident.

(3) The manufacturer shall record the test equipment description, pursuant to paragraph (a)(1) of this section, for each test cell that was used to perform emission testing under this subpart.

(b) The manufacturer shall retain all records required to be maintained under this subpart for a period of six (6) years after completion of all testing. Records may be retained as hard copy or reduced to microfilm, punch cards, etc., depending upon the manufacturer's record retention procedure, provided that in every case all the information contained in the hard copy is retained.

§86.1109–87 Entry and access.

(a) To allow the Administrator to determine whether a manufacturer is complying with the provisions of this subpart, EPA Enforcement Officers are authorized to enter any of the following (during operating hours and upon presentation of credentials):

(1) Any facility where any engine or vehicle to be introduced into commerce or any emission related component is manufactured, assembled, or stored;

(2) Any facility where any tests conducted pursuant to a PCA request or any procedures or activities connected with these tests are or were performed;

(3) Any facility where any engine or vehicle which is being tested, was tested, or will be tested is present; and

(4) Any facility where any record or other document relating to any of the above is located.

(b) Upon admission to any facility referred to in paragraph (a) of this section, EPA Enforcement Officers are authorized to perform the following inspection-related activities:

(1) To inspect and monitor any aspects of engine or vehicle manufacture, assembly, storage, testing and other procedures, and the facilities in which these procedures are conducted.

(2) To inspect and monitor any aspect of engine or vehicle test procedures or activities, including, but not limited to, monitoring engine or vehicle selection, preparation, service or mileage accumulation, preconditioning, repairs, emission test cycles, and maintenance; and to verify calibration of test equipment;

(3) To inspect and make copies of any records or documents related to the assembly, storage, selection and testing of an engine or vehicle; and

(4) To inspect and photograph any part or aspect of any engine or vehicle and any component used in the assembly thereof that is reasonably related to the purpose of the entry.

(c) EPA Enforcement Officers are authorized to obtain reasonable assistance without cost from those in charge of a facility to help them perform any function listed in this subpart and are authorized to request the manufacturer conducting the PCA to make arrangement with those in charge of a facility operated for its benefit to furnish reasonable assistance without cost to EPA, whether or not the manufacturer controls the facility.

(d) EPA Enforcement Officers are authorized to seek a warrant or court order authorizing the EPA Enforcement Officers to conduct activities related to entry and access as authorized in this section, as appropriate, to execute the functions specified in this section. EPA Enforcement Officers may proceed ex parte to obtain a warrant whether or not the Enforcement Officers first attempted to seek permission of the manufacturer conducting the PCA or the party in charge of the facilities in question to conduct activities related to entry and access as authorized in this section.

(e) A manufacturer that conducts a PCA shall permit EPA Enforcement Officers who present a warrant or court order as described in paragraph (d) of this section to conduct activities related to entry and access as authorized in this section and as described in the warrant or court order. The manufacturer shall cause those in charge of its facility or a facility operated for its benefit to permit EPA Enforcement Officers to conduct activities related to entry and access as authorized in this section pursuant to a warrant or court order whether or not the manufacturer controls the facility. In the absence of such a warrant or court order, EPA Enforcement Officers may conduct activities related to entry and access as authorized in this section only upon the consent of the manufacturer or the party in charge of the facilities in question.

(f) It is not a violation of this part or the Clean Air Act for any person to refuse to permit EPA Enforcement Officers to conduct activities related to entry and access as authorized in this section without a warrant or court order.

(g) A manufacturer is responsible for locating its foreign testing and manufacturing facilities in jurisdictions in which local foreign law does not prohibit EPA Enforcement Officers from conducting the entry and access activities specified in this section. EPA will not attempt to make any inspections which it has been informed that local foreign law prohibits.

(h) For purposes of this section, the following definitions are applicable:

(1) *Presentation of Credentials* means display of the document designating a person as an EPA Enforcement Officer.

(2) Where engine or vehicle storage areas or facilities are concerned, *operating hours* means all times during which personnel other than custodial personnel are at work in the vicinity of the area or facility and have access to it.

(3) Where facilities or areas other than those covered by paragraph (h)(2) of this section are concerned, *operating hours* means all times during which an

assembly line is in operation, engine or vehicle assembly is taking place, testing repair, service accumulation, preparation or compilation of records is taking place, or any other procedure or activity related to engine or vehicle manufacture, assembly or testing is being carried out in a facility.

(4) *Reasonable assistance* includes, but is not limited to, clerical, copying, interpreting and translating services, and making personnel of the facility being inspected available during their working hours on an EPA Enforcement Officer's request to inform the EPA Enforcement Officer of how the facility operates and to answer his or her questions. Any employee whom an EPA Enforcement Officer requests the manufacturer to cause to appear for questioning will be entitled to be accompanied, represented and advised by counsel.

§86.1110–87 Sample selection.

(a) Engines or vehicles comprising a test sample which are required to be tested pursuant to a PCA in accordance with this subpart will be selected at the location and in the manner specified by EPA. If a manufacturer determines that the test engines or vehicles cannot be selected in the manner specified by EPA, an alternative selection procedure may be employed, provided that the manufacturer requests approval of the alternative procedure in advance of the start of test sample selection and that the Administrator approves the procedure.

(b) The manufacturer shall have assembled the test engines or vehicles of the configuration selected for testing using its normal mass production processes for engines or vehicles to be distributed into commerce. In the case of heavy-duty engines, if the test engines are selected at a location where they do not have their operational and emission control systems installed, EPA will specify the manner and location for selection of components to complete assembly of the engines. The manufacturer shall assemble these components onto the test engines using normal assembly and quality control procedures as documented by the manufacturer.

(c) No quality control, testing, or assembly procedures will be used on the completed test engine or vehicle or any portion thereof, including parts and subassemblies, that will not be used during the production and assembly of all other engines or vehicles of that configuration.

(d) The EPA Enforcement Officers may specify that they, rather than the manufacturer, will select the test engines or vehicles.

(e) The order in which test engines or vehicles are selected determines the order in which test results are to be used in applying the PCA testing plan in accordance with §86.1112–87.

(f) The manufacturer shall keep on hand all engines or vehicles comprising the test sample until such time as a compliance level is determined in accordance with §86.1112–87(a) except that the manufacturer may ship any tested engine or vehicle which has not failed in accordance with §86.1112–87(f)(1). However, once the manufacturer ships any test engine or vehicle, it relinquishes the prerogative to conduct retests as provided in §86.1111–87(i).

§86.1111–87 Test procedures for PCA testing.

(a)(1) For heavy-duty engines, the prescribed test procedure for PCA testing is the Federal Test Procedure as described in subparts N, I, and P of this part.

(2) For heavy-duty vehicles, the prescribed test procedure for PCA testing is described in subpart M of this part.

(3) For light-duty trucks, the prescribed test procedure for PCA testing is the Federal Test Procedure as described in subparts B and P of this part.

(4) During the testing of heavy-duty diesel engines, the manufacturer shall decide for each engine, prior to the start of the initial cold cycle, whether the measurement of background particulate is required for the cold and hot cycles to be valid. The manufacturer may choose to have different requirements for the cold and hot cycles. If a manufacturer chooses to require the measurement of background particulate, failure to measure background particulate shall void the test cycle regardless of the test results. If a test

cycle is void, the manufacturer shall retest using the same validity requirements of the initial test.

(5) When testing light-duty trucks, the following exceptions to the test procedures in subpart B are applicable:

(i) The manufacturer may use gasoline test fuel meeting the specifications of paragraph (a) of § 86.113 for mileage accumulation. Otherwise, the manufacturer may use fuels other than those specified in this section only with advance approval of the Administrator.

(ii) The manufacturer may measure the temperature of the test fuel at other than the approximate midvolume of the fuel tank, as specified in paragraph (a) of § 86.131, and may drain the test fuel from other than the lowest point of the fuel tank, as specified in paragraph (b) of § 86.131, with the advance approval of the Administrator.

(iii) The manufacturer may perform additional preconditioning on PCA test vehicles other than the preconditioning specified in § 86.132 only if the additional preconditioning has been performed on certification test vehicles of the same configuration.

(iv) The manufacturer shall perform the heat build procedure 11 to 34 hours following vehicle preconditioning rather than according to the time period specified in paragraph (a) of § 86.133.

(v) The manufacturer may substitute slave tires for the drive wheel tires on the vehicle as specified in paragraph (e) of § 86.135, provided that the slave tires are the same size as the drive wheel tires.

(vi) The cold start exhaust emission test described in § 86.137 shall follow the heat build procedure described in § 86.133 by not more than one hour.

(vii) In performing exhaust sample analysis under § 86.140:

(A) When testing diesel vehicles, the manufacturer shall allow a minimum of 20 minutes warm-up for the HC analyzer, and a minimum of 2 hours warm-up for the CO, CO_2 and NO_X analyzers. [Power is normally left on for infrared and chemiluminescent analyzers. When not in use, the chopper motors of the infrared analyzers are turned off and the phototube high voltage supply to the chemiluminescent analyzers is placed in the standby position.]

(B) The manufacturer shall exercise care to prevent moisture from condensing in the sample collection bags.

(viii) The manufacturer need not comply with § 86.142, since the records required therein are provided under other provisions of this subpart.

(ix) In addition to the requirements of subpart B of this part, the manufacturer shall prepare gasoline-fueled vehicles as follows prior to exhaust emission testing:

(A) The manufacturer shall inspect the fuel system to insure the absence of any leaks of liquid or vapor to the atmosphere by applying a pressure of 14.5 ± 0.5 inches of water to the fuel system, allowing the pressure to stabilize, and isolating the fuel system from the pressure source. Following isolation of the fuel system, pressure must not drop more than 2.0 inches of water in 5 minutes. If required, the manufacturer shall perform corrective action in accordance with paragraph (d) of this section.

(B) When performing this pressure check, the manufacturer shall exercise care to neither purge nor load the evaporative emission control system.

(C) The manufacturer shall not modify the test vehicle's evaporative emission control system by component addition, deletion, or substitution, except to comply with paragraph (a)(4)(ii) of this section if approved in advance by the Administrator.

(b)(1) The manufacturer shall not adjust, repair, prepare, or modify the engines or vehicles selected for testing and shall not perform any emission tests on engines or vehicles selected for testing pursuant to a PCA request unless the adjustment, repair, preparation, modification, or tests are documented in the manufacturer's engine or vehicle assembly and inspection procedures and are actually performed on all engines or vehicles produced or unless these adjustments or tests are required or permitted under this subpart or are approved in advance by the Administrator.

(2) For 1984 and later model years the Administrator may adjust or cause to be adjusted any engine parameter which the Administrator has determined to be subject to adjustment for certification, Selective Enforcement

Audit and Production. Compliance Audit testing in accordance with § 86.084–22(e)(1), to any setting within the physically adjustable range of that parameter, as determined by the Administrator in accordance with § 86.084–2(e)(3)(ii), prior to the performance of any tests. However, if the idle speed parameter is one which the Administrator has determined to be subject to adjustment, the Administrator shall not adjust it to any setting which causes a lower engine idle speed than would have been possible within the physically adjustable range of the idle speed parameter if the manufacturer had accumulated 125 hours of service on the engine or 4,000 miles on the vehicle under paragraph (c) of this section, all other parameters being identically adjusted for the purpose of the comparison. The manufacturer may be requested to supply information to establish such an alternative minimum idle speed. The Administrator, in making or specifying these adjustments, may consider the effect of the deviation from the manufacturer's recommended setting on emissions performance characteristics as well as the likelihood that similar settings will occur on in-use heavy-duty engines or light-duty trucks. In determining likelihood, the Administrator may consider factors such as, but not limited to, the effect of the adjustment on engine or vehicle performance characteristics and surveillance information from similar in-use engines or vehicles.

(c) Prior to performing emission testing on a PCA test engine, the manufacturer may accumulate on each engine a number of hours of service equal to the greater of 125 hours or the number of hours the manufacturer accumulated during certification on the emission-data engine corresponding to the configuration tested during PCA. Prior to performing emission testing on a PCA test vehicle, the manufacturer may accumulate a number of miles equal to the greater of 4,000 miles or the number of miles the manufacturer accumulated during certification on the emission-data vehicle corresponding to the configuration tested during PCA. Service or mileage accumulation may be performed in any manner the manufacturer desires.

(d) No maintenance shall be performed on test engines or vehicles after selection for testing nor will any test engine or vehicle substitution or replacement be allowed, unless requested of and approved by the Administrator in advance of the performance of any maintenance or engine or vehicle substitution.

(e) The manufacturer shall expeditiously ship test engines or vehicles from the point of selection to the test facility or other location to meet any other requirements of this subpart. If the test facility is not located at or in close proximity to the point of selection, the manufacturer shall assure that test engines or vehicles arrive at the test facility within 24 hours of selection, except that the Administrator may approve more time based upon a request by the manufacturer accompanied by a satisfactory justification.

(f) If an engine or vehicle cannot complete the service or mileage accumulation or emission tests because of engine or vehicle malfunction, the manufacturer may request that the Administrator authorize the repair of the engine or vehicle. If the engine or vehicle cannot be repaired expeditiously, EPA may delete it from the test sequence.

(g)(1) Heavy-duty engine manufacturers with projected sales bound for the United States market for that year of 30,000 or greater, as made in their respective Applications for Certification, shall complete emission testing at their testing facility on a minimum of two engines per 24 hour period, including voided tests.

(2) Heavy-duty engine manufacturers with projected sales bound for the United States market for that year of less than 30,000, as made in their respective Applications for Certification, Shall complete emission testing at one engine per 24 hour period, including voided tests.

(3) Light-duty truck manufacturers shall complete emission testing on a minimum of four vehicles per 24 hour period, including voided tests.

(4) The Administrator may approve a longer period of time for conducting emission tests based upon a request by a manufacturer accompanied by a satisfactory justification.

(h) The manufacturer shall perform test engine or vehicle selection, shipping, preparation, service or mileage accumulation, and testing in such a manner as to insure that the audit is performed in an expeditious manner.

(i) The manufacturer may retest any engines or vehicles tested during a Production Compliance Audit once a compliance level has been established in accordance with § 86.1112–87 based on the first test on each engine or vehicle. The Administrator may approve retesting at other times based upon a request by the manufacturer accompanied by a satisfactory justification. The manufacturer may test each engine or vehicle a total of three times. The manufacturer shall test each engine or vehicle the same number of times. The manufacturer may accumulate additional service or mileage before conducting a retest, subject to the provisions of paragraph (c) of this section.

[50 FR 35388, Aug. 30, 1985, as amended at 62 FR 47123, Sept. 5, 1997]

§ 86.1112–87 Determining the compliance level and reporting of test results.

(a) A manufacturer that has elected to conduct a PCA in accordance with § 86.1106–87 may establish the compliance level for a pollutant for any engine or vehicle configuration by using the primary PCA sampling plan or either of two optional reduced PCA sampling plans (the fixed reduced sampling plan or the sequential reduced sampling plan) described below. A manufacturer that uses either of the two optional reduced PCA sampling plans may elect to continue testing and establish a compliance level under the primary PCA sampling plan.

(1) A manufacturer that elects to conduct a PCA for a pollutant using the primary PCA sampling plan shall:

(i) Conduct emission tests on 24 engines or vehicles in accordance with § 86.1111–87 for the pollutants for which the PCA was initiated. If the PCA follows an SEA failure, the number of additional tests conducted shall be the difference between 24 and the number of engines or vehicles tested in the SEA. If 24 or more engines or vehicles were tested in the SEA, no additional tests shall be conducted; and

(ii) Rank the final deteriorated test results, as defined by paragraph (e) of this section, obtained for that pollutant in order from the lowest to the highest value. If the PCA follows an SEA failure, all SEA test results for that pollutant shall be included in this ranking.

(iii) The compliance level for that pollutant is the final deteriorated test result in the sequence determined from table 1 of appendix XII of these regulations.

(2) A manufacturer that elects to conduct a PCA for a pollutant using the fixed reduced PCA sampling plan shall:

(i) Select a sample size between 3 and 23 engines or vehicles. If the PCA follows an SEA failure, the sample size selected cannot be less than the number of engines or vehicles tested during the SEA; and

(ii) Conduct emission tests on the selected sample in accordance with § 86.1111–87 for the pollutants for which the PCA was initiated.

(iii) The compliance level for the pollutant is the result of the following equation, using the test results obtained in paragraph (a)(2)(ii) of this section and all SEA test results for that pollutant if the PCA follows an SEA failure:

$$CL = \bar{X} + Ks$$

where:

CL = The compliance level.

$\bar{X}$ = The mean of the final deteriorated test results, as defined by paragraph (e) of this section.

K = A value that depends on the size of the test sample. See table 2 of appendix XII of this part for the value of K that corresponds to the size of the test sample.

s = The sample standard deviation.

The compliance level is rounded to the same number of significant figures contained in the applicable standard in accordance with ASTM E29–67.

(3) A manufacturer that elects to conduct a PCA for a pollutant using the sequential reduced PCA sampling plan shall perform the following:

(i) Select a sample size of 4, 8, 12, 16 or 20 engines or vehicles. If the PCA follows an SEA failure, the sample size

selected cannot be less than the number of engines or vehicles tested during the SEA.

(ii) Conduct emission tests on the selected sample in accordance with § 86.1111–87 for the pollutants for which the PCA was initiated.

(iii) The compliance level for the pollutant is the result of the following equation, using the test results obtained in (a)(3)(ii) and all SEA test results for that pollutant if the PCA follows an SEA failure:

$$CL = \bar{X} + Ks$$

where:

CL=The compliance level.

$\bar{X}$=The mean of the final deteriorated test results, as defined by paragraph (e) of this section.

K=A value that depends on the size of the test sample. See table 3 of appendix XII of this part for the value of K that corresponds to the size of the test sample.

s=The sample standard deviation.

The compliance level is rounded to the same number of significant figures contained in the applicable standard in accordance with ASTM E29–67.

(iv) After calculating a compliance level in accordance with paragraph (a)(3)(iii) of this section, a manufacturer may elect to increase the sample size by 4 engines or vehicles, or a multiple thereof, up to the maximum, including SEA engines or vehicles if any, of 20. Upon that election, the manufacturer shall add the additional engines or vehicles to the sample and perform paragraphs (a)(3)(ii) and (a)(3)(iii) of this section. This election may be repeated if appropriate. A compliance level determined under this election shall replace a previously determined compliance level.

(b) A fail decision is reached with respect to the upper limit when the compliance level determined in paragraph (a) of this section exceeds the applicable upper limit.

(c) Initial test results are calculated following the Federal Test Procedure specified in § 86.1111–87(a).

(d) Final test results are calculated by summing the initial test results derived in paragraph (c) of this section for each test engine or vehicle, dividing by the number of tests conducted on the engine or vehicle, and rounding in accordance with ASTM E29–67 to the same number of decimal places contained in the applicable standard expressed to one additional significant figure.

(e) Final deteriorated test results. (1) The final deteriorated test results for each heavy-duty engine or light-duty truck tested according to subpart B, I, N, or P of this part are calculated by applying the final test results by the appropriate deterioration factor, derived from the certification process for the engine family control system combination and model year for the selected configuration to which the test engine or vehicle belongs. If the deterioration factor computed during the certification process is multiplicative and it is less than one, that deterioration factor will be one. If the deterioration factor computed during the certification process is additive and it is less than zero, that deterioration factor will be zero.

(2) The final deteriorated test results are rounded to the same number of significant figures contained in the applicable standard in accordance with ASTM E29–67.

(f) A failed engine or vehicle is one whose final deteriorated test results, for one or more of the applicable exhaust pollutants, exceed:

(1) The applicable emission standard, or

(2) The compliance level established in paragraph (b) of this section.

(g) Within five working days after completion of PCA testing of all engines or vehicles, the manufacturer shall submit to the Administrator a report which includes the following information:

(1) The location and description of the manufacturer's emission test facilities which were utilized to conduct testing reported pursuant to this section;

(2) The applicable standards against which the engines or vehicles were tested;

(3) Deterioration factors for the engine family to which the selected configuration belongs;

(4) A description of the engine or vehicle and any emission-related component selection method used;

(5) For each test conducted:

(i) Test engine or vehicle description, including;

(A) Configuration and engine family identification,

(B) Year, make and build date,

(C) Engine or vehicle identification number, and

(D) Number of hours of service accumulated on engine or number of miles on vehicle prior to testing;

(ii) Location where service or mileage accumulation was conducted and description of accumulation procedure and schedule;

(iii) Test number, date, initial test results before and after rounding, final test results and final deteriorated test results for all emission tests, whether valid or invalid, and the reason for invalidation, if applicable;

(iv) A complete description of any modification, repair, preparation, maintenance, and/or testing which was performed on the test engine or vehicle and has not been reported pursuant to any other paragraph of this subpart and will not be performed on all other production engines or vehicles; and

(v) Any other information the Administrator may request relevant to the determination as to whether the new heavy-duty engines or heavy-duty vehicles being manufactured by the manufacturer do in fact conform with the regulations of this subpart; and

(6) The following statement and endorsement:

This report is submitted pursuant to section 206 of the Clean Air Act. This Production Compliance Audit was conducted in complete conformance with all applicable regulations under 40 CFR part 86 et seq. All data and information reported herein is, to the best of

(Company Name)_____'s knowledge, true and accurate. I am aware of the penalties associated with violations of the Clean Air Act and the regulations thereunder.

_____

(Authorized Company Representative)

§ 86.1113–87 Calculation and payment of penalty.

(a) The NCP for each engine or vehicle for which a compliance level has been determined under § 86.1112–87 is calculated according to the formula in paragraph (a)(1) or (a)(2) of this section depending on the value of the compliance level. Each formula contains an annual adjustment factor (AAF_i) which is defined in paragraph (a)(3) of this section. Other terms in the formulas are defined in paragraph (a)(4) of this section.

(1) If the compliance level (CL) is greater than the standard and less than or equal to X (e.g., point CL_1 in figure 1), then:

$$NCP_n = (PR_1)(CL - S)\left(\prod_{i=1}^{n} AAF_i\right)$$

where:

$PR_1 = (F)\ (MC_{50})$

(2) If the compliance level is greater than X and less than or equal to the upper limit as determined by § 86.1104–87 (e.g., point CL_2 in figure 1), then:

$$NCP_n = (COC_{50} + (PR_2)(CL - X))\left(\prod_{i=1}^{n} AAF_i\right)$$

where:

$$PR_2 = \frac{COC_{90} - COC_{50}}{UL - X}$$

(3) AAF_i has the following values:

(i) If $frac_{i-1} = 0$, then $AAF_i = 1 + I_{i-1}$

(ii) If $frac_{i-1} > 0$, then:

$$AAF_i = 1 + I_{i-1} + A_i\left[\frac{1}{1 - frac_{i-1}}\right]^i$$

Figure 1

Penalty vs. Compliance Level

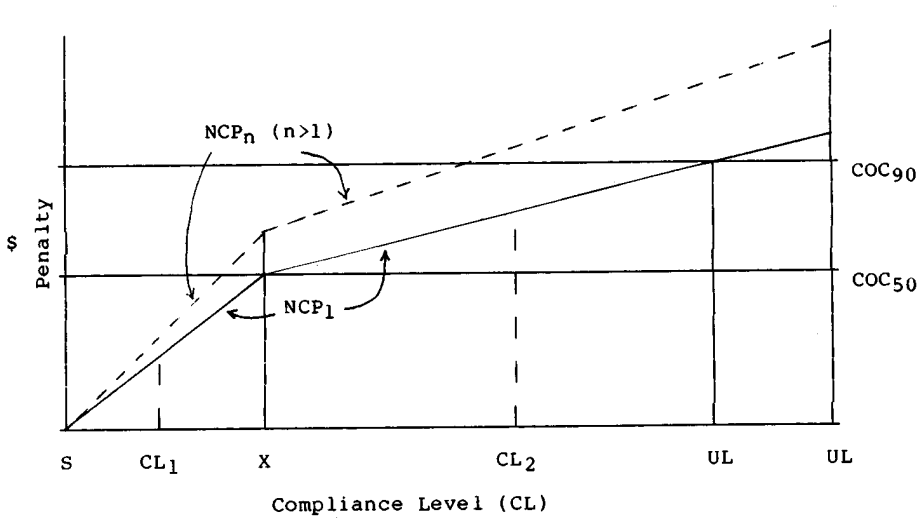

If $frac_{i-1}$ >0.50, then $frac_{i-1}$ will be set equal to 0.50.

(iii) AAF_1=1

(iv) In calculating the NCP for year n, the value $frac_{i-1}$ for i=n will include actual NCP usage through March 31 of model year n–1 and EPA's estimate of additional usage for the remainder of model year n-1 using manufacturer input. All manufacturers using NCPs must report by subclass actual NCP and non-NCP production numbers through March 31, an estimate of NCP and non-NCP production for the remainder of the model year, and the previous year's actual NCP and non-NCP production to EPA no later than April 30 of the model year. If EPA is unable to obtain similar information from manufacturers not using NCPs, EPA will use projected sales data from the manufacturers' application for certification in computing the total production of the subclass and the $frac_{i-1}$. The value of $frac_{i-1}$ will be corrected to reflect actual year-end usage of NCPs and a corrected AAF will be used to establish NCPs in future years. The correction of previous year's AAF will not affect the previous year's penalty.

(4) The terms in the above formulas have the following meanings and values, which may be determined separately for each subclass and pollutant for which an NCP is offered. The production of Federal and California designated engines or vehicles shall be combined for the purpose of this section in calculating the NCP for each engine or vehicle.

NCP_n=NCP for year n for each applicable engine or vehicle

CL=Compliance level for year n for applicable engines or vehicles

S=Emission standard

UL=Upper limit as determined by section 86.1104–87, except that, if the upper limit is determined by section 86.1104–87(c), the value of UL in paragraph (a)(2) of this section shall be the prior emission standard for that pollutant.

UL′=Upper limit as determined by section 86.1104–87(c). This value is not used in the above formulas.

X=Compliance level above the standard at which NCP_1 equals COC_{50}

$$X = \frac{COC_{50}}{(F)(MC_{50})} + S$$

PR_1=Penalty rate when CL≤ X

PR_2=Penalty rate when X< CL≤ applicable upper limit

$$\prod_{i=1}^{n} AAF_i = \text{Running product, i.e., } (AAF_1)\times(AAF_2)\times\cdots\times(AAF_n)$$

i=An index representing a year. It represents the same year for both Federal and California designated engines or vehicles of the same production model year.

n=Index representing the number of model years for which the NCP has been available for an engine or vehicle subclass (i.e., n=1 for the first year that the NCP is available, and so on until n=n for the nth year that the NCP is available). The factor ''n'' is based on the model year the NCP is first available, as specified in section 86.1105–87 for the engine or vehicle subclass and pollutant for both Federal and California designated engines and vehicles.

COC_{50}=Estimate of the average total incremental cost to comply with the standard relative to complying with the upper limit.

COC_{90}=Estimate of the 90th percentile total incremental cost to comply with the standard relative to complying with the upper limit.

MC_{50}=Estimate of the average marginal cost of compliance (dollars per emission unit) with the standard.

F=Factor used to estimate the 90th percentile marginal cost based on the average marginal cost (the minimum value of F is 1.1, the maximum value of F is 1.3).

AAF_i=Annual adjustment factor for year i, $frac_{i-1}$=Fraction of engines or vehicles of a subclass using NCPs in previous year (year i-1).

A_i=Usage adjustment factor in year i: A_i=0.10 for i=2; A_i=0.08 for i<2.

I_i=Percentage increase in overall consumer price index in year i.

(5) The values of COC_{50}, COC_{90}, MC_{50} and F will be determined for each applicable subclass by EPA based on the cost data used by EPA in setting the applicable emission standard. However, where the rulemaking to establish a specific NCP occurs after the rulemaking to establish the standard, EPA may augment the data base used to establish the standard by including the best cost and emission performance data available to EPA during the specific NCP rulemaking.

(6) In calculating the NCP, appropriate values of the following predefined terms should be used: CL, S, UL, F, and A_i. For all other terms, unrounded values of at least five figures beyond the decimal point should be used in calculations leading up to the penalty amount. Any NCP calculated under paragraph (a) of this section will be rounded to the nearest dollar in accordance with ASTM E29–67.

(b) The NCP determined in paragraph (a) of this section is assessed against all those engines or vehicles of the nonconforming configuration or engine family produced at all assembly plants and distributed into commerce—

(1) Since the beginning of the model year in the case of a certification failure described by § 86.1106–87(a).

(2) Beginning ten days after an SEA failure described by § 86.1106–87 (b) or (c).

(3) Following implementation of a production running change described by § 86.1106–87(d).

(c) The NCP will continue to be assessed during the model year, until such time, if any, that the configuration or engine family is brought into conformance with applicable emission standards.

(d) A manufacturer may carry over an NCP from a model year to the next model year. There is no limit to the number of years that carryover can continue. The amount of the penalty will increase each year according to paragraph (a) of this section.

(e) The Administrator shall notify the manufacturer in writing of the nonconformance penalty established under paragraph (a) of this section after the completion of the PCA under § 86.1112–87.

(f) A manufacturer may request a hearing under § 86.1115–87 as to whether the compliance level (including a compliance level in excess of the upper limit) was determined in accordance with the procedures in § 86.1112–87(a) or whether the nonconformance penalty was calculated in accordance with the procedures in § 86.1113–87(a). If a nonconformance penalty has been established, such hearing must be requested within fifteen (15) days or such other period as may be allowed by the Administrator after the notification of the nonconformance penalty. If a manufacturer wishes to challenge a compliance level in excess of the upper limit, he must request a hearing within fifteen (15) days or such other period as may be allowed by the Administrator after the completion of the Production Compliance Audit.

(g)(1) Except as provided in paragraph (g)(2) of this section, the nonconformance penalty or penalties assessed under this subpart must be paid as follows:

(i) By the quarterly due dates, i.e., within 30 days of the end of each calendar quarter (March 31, June 30, September 30 and December 31), or according to such other payment schedule as the Administrator may approve pursuant to a manufacturer's request, for all nonconforming engines or vehicles produced by a manufacturer in accordance with paragraph (b) of this section and distributed into commerce for that quarter.

(ii) The penalty shall be payable to U.S. Environmental Protection Agency, NCP Fund, P.O. Box 360277M, Pittsburgh, PA 15251.

(2) When a manufacturer has requested a hearing under § 86.1115–87, it must pay the nonconformance penalty, and any interest, within ten days after the Presiding Officer renders his decision, unless the manufacturer first files a notice of intention to appeal to the Administrator pursuant to § 86.1115–87(t)(1), or, if an appeal of the Presiding Officer's decision is taken, within ten days after the Administrator renders his decision, unless the manufacturer first files a petition for judicial review.

(3) A manufacturer making payment under paragraph (g)(1) or (g)(2) of this section shall submit the following information by each quarterly due date to: Director, Manufacturers Operations Division, U.S. Environmental Protection Agency, 401 M Street SW., Washington, DC 20460. This information shall be submitted even if a manufacturer has no NCP production in a given quarter.

(i) Corporate identification, identification and quantity of engines or vehicles subject to the NCP, certificate identification (number and date), NCP payment calculations and interest payment calculations, if applicable.

(ii) The following statement and endorsement:

This information is submitted pursuant to section 206 of the Clean Air Act. All information reported herein is, to the best of

_____'s

(Company name)

knowledge, true and accurate. I am aware of the penalties associated with violations of the Clean Air Act and the regulations thereunder.

_____

(Authorized Company Representative)

(4) The Administrator may verify the production figures or other documentation submitted under paragraph (g)(3) of this section.

(5)(i) Interest shall be assessed on any nonconformance penalty for which payment has been withheld under § 86.113–87(g) (1) or (2). Interest shall be calculated from the due date for the first quarterly NCP payment, as determined under § 86.1113–87(g)(1), until either the date on which the Presiding Officer or the Administrator renders the final decision of the Agency under § 86.1115–87 or the date when an alternate payment schedule (approved pursuant to § 86.1113–87(g)(1)) ends.

(ii) The combined principal plus interest on each quarterly NCP payment withheld pursuant to § 86.1113–87(g) (1) or (2) shall be calculated according to the formula:

$$QNCP(1 + R).25n$$

where:

QNCP=the quarterly NCP payment

R=the interest rate applicable to that quarter

n=the number of quarters for which the quarterly NCP payment is outstanding.

(iii) The number of quarters for which payment is outstanding for purposes of this paragraph shall be the

number of quarterly NCP payment due dates, as determined under § 86.1113–87(g)(1), which have elapsed throughout the duration of a hearing request, or alternate payment schedule.

(iv) The interest rate applicable to a quarter for purposes of this paragraph shall be the rate published by the Secretary of the Treasury pursuant to the Debt Collection Act of 1982 and effective on the date on which the NCP payment was originally due.

(6) A manufacturer will be refunded an overpayment, or be permitted to offset an overpayment by withholding a future payment, if approved in advance by the Administrator. The government shall pay no interest on overpayments.

(h) A manufacturer that certifies as a replacement for the nonconforming configuration, a configuration that is in conformance with applicable standards, and that performs a production compliance audit (PCA) in accordance with § 86.1112–87(a) that results in a compliance level below the applicable standard, will be eligible to receive a refund of a portion of the engineering and development component of the penalty. The engineering and development component will be determined by multiplying the base penalty amount by the engineering and development factor for the appropriate subclass and pollutant in § 86.1105–87. The amount refunded will depend on the model year in which the certification and PCA take place. In cases where payment of penalties have been waived by EPA in accordance with paragraph (g)(1)(iii) of this section, EPA will refund a portion of the engineering and development component. The proportionate refund to be paid by EPA will be based on the proportion of vehicles or engines of the nonconforming configuration for which NCPs were paid to EPA. The refund is calculated as follows:

$R_{tot}=D_n \times F_{E\&D} \times NCP_1 \times Prod_{tot}$

$R_{Cal}=(Prod_{Cal}/Prod_{tot}) \times (R_{tot})$

$R_{EPA}=R_{tot}-R_{Cal}$

Where:

n=index representing the number of model years for which the NCP has been available for an engine or vehicle subclass (i.e., n=1 for the first year that NCPs are available, . . . , n=n for the nth year the NCPs are available; same as ''n'' in paragraph (a)(4)).

D_n=discount factor depending on the number of model years (n) for which NCPs were available at the time of certification and PCA of the replacement configuration, and its value is as follows:

D_1=0.90
D_2=0.79
D_3=0.67
D_4=0.54
D_5=0.39
D_6=0.23
D_7=0.05
D_n=0.00 for n=8 or larger

$F_{E\&D}$=the engineering and development factor specified in section 86.1105–87 for the appropriate subclass and pollutant

NCP_1=the penalty for each engine or vehicle during the first (base) year the NCP is available as calculated in paragraph (a)

$Prod_{tot}$=total number of engines or vehicles produced in the subclass for which NCPs were paid to EPA or to the State of California

$Prod_{Cal}$=number of engines or vehicles in the subclass demonstrated to have been titled, registered or principally used in the State of California and for which NCPs were paid to the State of California under paragraph (g)(1)

R_{tot}=Total refund due to the manufacturer for the engineering and development component of the NCP

R_{Cal}=Refund due to the manufacturer from the State of California for the engineering and development component of the NCP

R_{EPA}=Refund due to the manufacturer from EPA for the engineering and development component of the NCP.

[50 FR 35388, Aug. 30, 1985, as amended at 50 FR 53467, Dec. 31, 1985; 53 FR 19134, May 26, 1988; 55 FR 46629, Nov. 5, 1990; 61 FR 51366, Oct. 2, 1996]

§ 86.1114–87 Suspension and voiding of certificates of conformity.

(a) The certificate of conformity is suspended with respect to any engine or vehicle failing pursuant to paragraph (f) of § 86.1112–87 effective from the time that a fail decision is made for that engine or vehicle.

(b) Once a certificate has been suspended for a failed engine or vehicle as provided for in paragraph (a) of this section, the manufacturer shall take the following actions:

(1) Before the certificate is reinstated for that failed engine or vehicle,

(i) Remedy the nonconformity, and

(ii) Demonstrate that the engine or vehicle conforms to the applicable

standards or compliance levels by retesting the engine or vehicle in accordance with these regulations; and

(2) Submit a written report to the Administrator within five working days after successful completion of testing on the failed engine or vehicle, which contains a description of the remedy and test results for each engine or vehicle in addition to other information that may be required by this regulation.

(c) The Administrator may suspend the certificate of conformity if the manufacturer, after electing to conduct a PCA, fails to adhere to the requirements stated in §86.1106–87(b)(3), (b)(6)(iii), (c)(2), or (c)(5)(iii).

(d) The Administrator may suspend the qualified certificate of conformity issued under the conditions specified in §86.1106–87 if the manufacturer fails to adhere to the requirements stated in §86.1106–87(a)(3), (a)(4)(iii), (d)(2)(iii), or (d)(3).

(e) The Administrator may suspend the certificate of conformity or the qualified certificate of conformity if the compliance level as determined in §86.1112–87(a) is in excess of the upper limit.

(f) The Administrator may void the certificate of conformity if the compliance level as determined in §86.1112–87(a) is in excess of the upper limit and the manufacturer fails to recall any engines or vehicles introduced into commerce pursuant to §86.1106–87(a)(4)(ii), (b)(6)(ii), (c)(5)(ii) or (d)(2)(ii).

(g) The Administrator may void the certificate of conformity for those engines or vehicles for which the manufacturer fails to meet the requirements of §86.1106–87(a)(4)(i), (b)(6)(i), (c)(5)(i), or (d)(2)(i).

(h) The Administrator shall notify the manufacturer in writing of any suspension or voiding of a certificate of conformity in whole or in part, except as provided for in paragraph (a) of this section.

(i) A certificate of conformity suspended or voided under paragaph (c), (d), (e), (f) or (g) of this section may be reinstated after a written request by the manufacturer and under such terms and conditions as the Administrator may require and after the manufacturer demonstrates compliance with applicable requirements.

(j) After the Administrator suspends or voids a certificate of conformity pursuant to this section or notifies a manufacturer of his intent to suspend or void a certificate of conformity under §86.087–30(e), and prior to the commencement of a hearing, if any, under §86.1115–87, if the manufacturer demonstrates to the Administrator's satisfaction that the decision to suspend or void the certificate was based on erroneous information, the Administrator shall reinstate the certificate.

§86.1115–87 Hearing procedures for nonconformance determinations and penalties.

(a) *Applicability*. The procedures prescribed by this section shall apply whenever a manufacturer requests a hearing pursuant to §86.087–30(e)(6)(i), §86.087–30(e)(7), or §86.1113–87(f).

(b) *Definitions*. The following definitions shall be applicable to this section:

(1) *Hearing Clerk* shall mean the Hearing Clerk of the Environmental Protection Agency.

(2) *Manufacturer* means a manufacturer contesting a compliance level or penalty determination sent to the manufacturer.

(3) *Party* means the Agency and the manufacturer.

(4) *Presiding Officer* shall mean an Administrative Law Judge appointed pursuant to 5 U.S.C. 3105 (see also 5 CFR part 930 as amended).

(5) *Environmental Appeals Board* shall mean the Board within the Agency described in §1.25 of this title. The Administrator delegates authority to the Environmental Appeals Board to issue final decisions in appeals filed under this subpart. Appeals directed to the Administrator, rather than to the Environmental Appeals Board, will not be considered. This delegation of authority to the Environmental Appeals Board does not preclude the Environmental Appeals Board from referring an appeal or a motion filed under this subpart to the Administrator for decision when the Environmental Appeals Board, in its discretion, deems it appropriate to do so. When an appeal or

motion is referred to the Administrator, all parties shall be so notified and the rules in this part referring to the Environmental Appeals Board shall be interpreted as referring to the Administrator.

(c) *Request for public hearing.* (1) A manufacturer may request a hearing pursuant to § 86.1113–87(f) if it disagrees with the Administrator's determination of compliance level or penalty calculation or both, or pursuant to § 86.085–30(e)(6)(i) or § 86.085–30(e)(7) if it disagrees with the Administrator's proposed suspension or voiding of a certificate of conformity. Requests for such a hearing shall be filed no later than 15 days:

(i) After receipt of the Administrator's notification of NCP, if the compliance level is in the allowable range of non-conformity, or

(ii) After completion of the Production Compliance Audit, if the compliance level exceeds the upper limit, or

(iii) After receipt of the Administrator's notification of a proposed suspension or voiding of a certificate of conformity if the hearing is requested pursuant to §§ 86.085–30(e)(6)(i) or 86.085–30(e)(7), unless otherwise specified by the Administrator. The manufacturer shall simultaneously serve two copies of this request upon the Director of the Manufacturers Operations Division and file two copies with the Hearing Clerk. Failure of the manufacturer to request a hearing within the time provided constitutes a waiver of the right to a hearing. Subsequent to the expiration of the period for requesting a hearing as of right, the Administrator may, in his discretion and for good cause shown, grant the manufacturer a hearing to contest the compliance level or penalty calculation.

(2) The request for a public hearing shall contain:

(i) A statement as to which vehicle or engine subclasses or configurations are to be the subject of the hearing;

(ii) A concise statement of the issues to be raised by the manufacturer at the hearing for each vehicle or engine subclass or configuration for which the manufacturer has requested the hearing. *Provided, however,* That in the case of a hearing requested under § 86.1113–87(f), the hearing shall be restricted to the following issues:

(A) Whether the compliance level was determined in accordance with the procedures in § 86.1112–87(a); or

(B) Whether the penalty was calculated in accordance with the procedures in § 86.1113–87(a).

(iii) A statement specifying reasons why the manufacturer believes it will prevail on the merits on each of the issues so raised; and

(iv) A summary of the evidence which supports the manufacturer's position on each of the issues so raised.

(3) A copy of all requests for public hearings shall be kept on file in the Office of the Hearing Clerk and shall be made available to the public during Agency business hours.

(d) *Summary decision.* (1) In the case of a hearing requested under § 86.1113–87(f) when it clearly appears from the data and other information contained in the request for a hearing that there is no genuine and substantial question of fact with respect to the issues specified in § 86.1115–87(c)(2)(ii), the Administrator will enter an order denying the request for a hearing, and reaffirming the original compliance level determination or penalty calculation.

(2) Any order issued under paragraph (d)(1) of this section shall have the force and effect of a final decision of the Administrator, as issued pursuant to paragraph (v)(4) of this section.

(3) If the Administrator determines that a genuine and substantial question of fact does exist with respect to any of the issues referred to in paragraph (d)(1) of this section, he shall grant the request for a hearing and publish a notice of public hearing in accordance with paragraph (h) of this section.

(e) *Filing and service.* (1) An original and two copies of all documents or papers required or permitted to be filed pursuant to this section shall be filed with the Hearing Clerk. Filing shall be deemed timely if mailed, as determined by the postmark to the Hearing Clerk within the time allowed by this section. If filing is to be accomplished by mailing, the documents shall be sent to the address set forth in the notice of public hearing as described in paragraph (h) of this section.

(2) To the maximum extent possible, testimony shall be presented in written form. Copies of written testimony shall be served upon all parties as soon as practicable prior to the start of the hearing. A certificate of service shall be provided on or accompany each document or paper filed with the Hearing Clerk. Documents to be served upon the Director of the Manufacturers Operations Division shall be sent by registered mail to: Director, Manufacturers Operations Division, U.S. Environmental Protection Agency (EN–340F), 401 M Street, SW., Washington, DC 20460. Service by registered mail is complete upon mailing.

(f) *Time.* (1) In computing any period of time prescribed or allowed by this section, except as otherwise provided, the day of the act or event from which the designated period of time begins to run shall not be included. Saturdays, Sundays, and Federal legal holidays shall be included in computing any such period allowed for the filing of any document or paper, except that when such a period expires on a Saturday, Sunday, or Federal legal holiday, such period shall be extended to include the next following business day.

(2) A prescribed period of time within which a party is required or permitted to do an act shall be computed from the time of service, except that when service is accomplished by mail, three days shall be added to the prescribed period.

(g)(1) *Consolidation.* The Administrator of the Presiding Officer in his discretion may consolidate two or more proceedings to be held under this section for the purpose of resolving one or more issues whenever it appears that such consolidation will expedite or simplify consideration of such issues. Consolidation shall not affect the right of any party to raise issues that could have been raised if consolidation had not occurred.

(2) If a vehicle or engine is determined to be in nonconformity during certification testing under subpart A of this part, then the manufacturer may wait to challenge the determination until after production compliance auditing and calculation of his penalty and may consolidate challenges to the determination of nonconformity and the compliance level determination or the penalty calculation, without losing any rights he would otherwise have had.

(3) If a vehicle or engine is determined to be in nonconformity during selective enforcement auditing under subpart K of this part, then the manufacturer must wait to challenge the determination until after the compliance level determination and the penalty calculation, and must consolidate challenges to the determination of nonconformity and the compliance level determination or the calculation of the penalty.

(h) *Notice of public hearings.* (1) Notice of public hearing under this section shall be given by publication in the FEDERAL REGISTER and by such other means as the Administrator finds appropriate to provide notice to the public. To the extent possible, hearings under this section shall be scheduled to commence within 30 days of receipt of the application in paragraph (c) of this section.

(2) [Revised]

(i) *Amicus curiae.* Persons not parties to the proceeding wishing to file briefs may do so by leave of the Presiding Officer granted on motion. A motion for leave shall identify the interest of the applicant and shall state the reasons why the proposed amicus brief is desirable.

(j) *Presiding Officer.* The Presiding Officer shall have the duty to conduct a fair and impartial hearing in accordance with 5 U.S.C. 554, 556 and 557 and to take all necessary action to avoid delay in the disposition of the proceedings and to maintain order. He shall have all power consistent with Agency rules and with the Administrative Procedure Act necessary to this end, including the following:

(1) To administer oaths and affirmations;

(2) To rule upon offers of proof and exclude irrelevant or repetitious material;

(3) To regulate the course of the hearings and the conduct of the parties and their counsel therein;

(4) To hold conferences for simplification of the issues or any other proper purpose;

(5) To consider and rule upon all procedural and other motions appropriate in such proceedings;

(6) To require the submission of direct testimony in written form with or without affidavit whenever, in the opinion of the Presiding Officer, oral testimony is not necessary for full and true disclosure of the facts;

(7) To enforce agreements and orders requiring access as authorized by law;

(8) To require the filing of briefs on any matter on which he is required to rule;

(9) To require any party or any witness, during the course of the hearing, to state his position on any issue;

(10) To take or cause depositions to be taken whenever the ends of justice would be served thereby;

(11) To make decisions or recommend decisions to resolve the disputed issues on the record of the hearing;

(12) To issue, upon good cause shown, protective orders as described in paragraph (n) of this section.

(k) *Conferences.* (1) At the discretion of the Presiding Officer, conferences may be held prior to or during any hearing. The Presiding Officer shall direct the Hearing Clerk to notify all parties of the time and location of such conference. At the discretion of the Presiding Officer, persons other than parties may attend. At a conference the Presiding Officer may:

(i) Obtain stipulations and admissions, receive requests and order depositions to be taken, identify disputed issues of fact and law, and require or allow the submission of written testimony from any witness or party;

(ii) Set a hearing schedule for as many of the following as are deemed necessary by the Presiding Officer:

(A) Oral and written statements;

(B) Submission of written direct testimony as required or authorized by the Presiding Officer;

(C) Oral direct and cross-examination of a witness where necessary as prescribed in paragraph (p) of this section; and

(D) Oral argument, if appropriate.

(iii) Identify matters of which official notice may be taken;

(iv) Consider limitation of the number of expert and other witnesses;

(v) Consider the procedure to be followed at the hearing; and

(vi) Consider any other matter that may expedite the hearing or aid in the disposition of the issue.

(2) The results of any conference including all stipulations shall, if not transcribed, be summarized in writing by the Presiding Officer and made part of the record.

(l) *Primary discovery (exchange of witness lists and documents).* (1) At a prehearing conference or within some reasonable time set by the Presiding Officer prior to the hearing, each party shall make available to the other parties the names of the expert and other witnesses the party expects to call, together with a brief summary of their expected testimony and list of all documents and exhibits which the party expects to introduce into evidence. Thereafter, witnesses, documents, or exhibits may be added and summaries of expected testimony amended upon motion by a party.

(2) The Presiding Officer may upon motion by a party or other person, and for good cause shown, by order

(i) Restrict or defer disclosure by a party of the name of a witness or a narrative summary of the expected testimony of a witness, and

(ii) Prescribe other appropriate measures to protect a witness. Any party affected by any such action shall have an adequate opportunity, once he learns the name of a witness and obtains the narrative summary of this expected testimony, to prepare for the presentation of this case.

(m) *Other discovery.* (1) Except as provided by paragraph (m)(1) of this section, further discovery under this paragraph shall be permitted only upon determination by the Presiding Officer:

(i) That such discovery will not in any way unreasonably delay the proceeding;

(ii) That the information to be obtained is not obtainable voluntarily; and

(iii) That such information has significant probative value. The Presiding Officer shall be guided by the procedures set forth in the Federal Rules of Civil Procedure, where practicable, and the precedents thereunder, except that

no discovery shall be undertaken except upon order of the Presiding Officer or upon agreement of the parties.

(2) The Presiding Officer shall order depositions upon oral questions only upon a showing of good cause and upon a finding that:

(i) The information sought cannot be obtained by alternative methods; or

(ii) There is a substantial reason to believe that relevant and probative evidence may otherwise not be preserved for presentation by a witness at the hearing.

(3) Any party to the proceeding desiring an order of discovery shall make a motion or motions therefor. Such a motion shall set forth:

(i) The circumstances warranting the taking of the discovery;

(ii) The nature of the information expected to be discovered; and

(iii) The proposed time and place where it will be taken. If the Presiding Officer determines the motion should be granted, he shall issue an order for the taking of such discovery together with the conditions and terms thereof.

(4) Failure to comply with an order issued pursuant to this paragraph may lead to the inference that the information to be discovered would be adverse to the person or party from whom the information was sought.

(n) *Protective orders, in camera proceedings.* (1) Upon motion by a party or by the person from whom discovery is sought, and upon a showing by the movant that the disclosure of the information to be discovered, or a particular part thereof (other than emission data), would result in methods or processes entitled to protection as trade secrets of the person being divulged, the Presiding Officer may enter a protective order with respect to such material. Any protective order shall contain such terms governing the treatment of the information as may be appropriate under the circumstances to prevent disclosure outside the hearing, *provided* that the order shall state that the material shall be filed separately from other evidence and exhibits in the hearing. Disclosure shall be limited to parties to the hearing, their counsel and relevant technical consultants, and authorized representatives of the United States concerned with carrying out the Act. Except in the case of the government, disclosure may be limited to counsel for parties who shall not disclose such information to the parties themselves. Except in the case of the government, disclosure to a party or his counsel shall be conditioned on execution of a sworn statement that no disclosure of the information will be made to persons not entitled to receive it under the terms of the protective order. (No such provision is necessary where government employees are concerned because disclosure by them is subject to the terms of 18 U.S.C. 1905.)

(2)(i) A party or person seeking a protective order may be permitted to make all or part of the required showing in camera. A record shall be made of such in camera proceedings. If the Presiding Officer enters a protective order following a showing in camera, the record of such showing shall be sealed and preserved and made available to the Agency or court in the event of appeal.

(ii) Attendance at any in camera proceeding may be limited to the Presiding Officer, representatives of the Agency, and the person or party seeking the protective order.

(3) Any party, subject to the terms and conditions of any protective order issued pursuant to paragraph (n)(1) of this section, that desires to make use of any in camera documents or testimony in the presentation of his case shall apply to the Presiding Officer by motion for permission to do so, and shall state the justification for the motion. The Presiding Officer, in granting any such motion, shall enter an order protecting the rights of the affected persons and parties as far as is practicable, and preventing unnecessary disclosure of such information and testimony concerning such information.

(4) In the submittal of proposed findings, briefs, or other papers, counsel for all parties shall make a good faith attempt to refrain from disclosing the specific details of in camera documents and testimony. This shall not preclude references in such proposed findings, briefs, or other papers to such documents or testimony. This shall not preclude references in such proposed findings, briefs, or other papers marked

''confidential,'' which shall become part of the in camera record.

(o) *Motions.* (1) All motions, except those made orally during the course of the hearing, shall be in writing and shall state with particularity the grounds therefore, shall set forth the relief or order sought, and shall be filed with the Hearing Clerk and served upon all parties.

(2) Within such time as may be fixed by the Environmental Appeals Board or the Presiding Officer, as appropriate, any party may serve and file an answer to the motion. The movant shall, if requested by the Environmental Appeals Board or the Presiding Officer, as appropriate, serve and file reply papers, within the time set by the request.

(3) The Presiding Officer shall rule upon all motions filed or made prior to the filing of his decision or accelerated decision, as appropriate. The Environmental Appeals Board shall rule upon all motions filed prior to the appointment of a Presiding Officer and all motions filed after the filing of the decision of the Presiding Officer or accelerated decision. Oral argument of motions will be permitted only if the Presiding Officer or the Environmental Appeals Board, as appropriate, deems it necessary.

(p) *Evidence.* (1) The official transcripts and exhibits, together with all papers and requests filed in the proceeding, shall constitute the record. Immaterial or irrelevent parts of an admissible document shall be segregated and excluded so far as practicable. Documents or parts thereof subject to a protective order under paragraph (n) of this section shall be segregated. Evidence may be received at the hearing even though inadmissible under the rules of evidence applicable to judicial proceedings. The weight to be given evidence shall be determined by its reliability and probative value.

(2) The Presiding Officer shall allow the parties to examine and cross-examine a witness to the extent that such examination and cross-examination is necessary for a full and true disclosure of the facts.

(3) Rulings of the Presiding Officer on the admissibility of evidence, the propriety of examination and cross-examination and other procedural matters shall appear in the record.

(4) Parties shall automatically be presumed to have taken exception to an adverse ruling.

(q) *Record.* (1) Hearings shall be stenographically reported and transcribed and the original transcripts shall be part of the record. Copies of the records shall be filed with the Hearing Clerk and made available during Agency business hours for public inspection. Any person who wants a copy of the record of the hearing or any part thereof, except as provided in paragraph (n) of this section, shall be entitled to the same upon payment of the cost thereof.

(2) The official transcripts and exhibits, together with all papers and requests filed in the proceeding, shall constitute the record.

(r) *Proposed findings, conclusions.* (1) Within 30 days of the close of the reception of evidence, or within such longer time as may be fixed by the Presiding Officer, any party may submit for the consideration of the Presiding Officer proposed findings of fact, conclusions of law, and a proposed order, together with reasons therefore and briefs in support thereof. Such proposals shall be in writing, shall be served upon all parties, and shall contain adequate references to the record and authorities relied upon.

(2) The record shall show the Presiding Officer's ruling on the proposed findings and conclusions except when his order disposing of the proceeding otherwise informs the parties of the action taken by him.

(s) *Decision of the Presiding Officer.* (1) Unless extended by the Environmental Appeals Board, the Presiding Officer shall issue and file with the Hearing Clerk his decision within 30 days after the period for filing proposed findings has expired, as provided for in paragraph (c) of this section.

(2) The Presiding Officer's decision shall become the decision of the Environmental Appeals Board (i) 10 days after issuance thereof, if no notice of intention to appeal as described in paragraph (t) of this section is filed, unless in the interim the Environmental Appeals Board shall have taken

action to review or stay the effective date of the decision; or (ii) 5 days after expiration of the period allowed by paragraph (t)(1) of this section for perfection of an appeal, if a notice of intention to appeal is filed but the appeal is not perfected, unless within that 5 day period the Environmental Appeals Board shall have taken action to review or stay the effective date of the decision;

(3) The Presiding Officer's decision shall include a statement of findings and conclusions, as well as the reasons or basis therefore, upon all the material issues of fact or law presented on the record and an appropriate rule or order. Such decision shall be supported by substantial evidence and based upon a consideration of the whole record.

(4) At any time prior to the issuance of his decision, the Presiding Officer may reopen the proceeding for the reception of further evidence. Except for the correction of clerical errors, the jurisdiction of the Presiding Officer is terminated upon the issuance of his decision.

(t) *Appeal from the decision of the Presiding Officer.* (1) Any party to a proceeding may appeal the Presiding Officer's decision to the Environmental Appeals Board, *Provided,* That within 10 days after issuance of the Presiding Officer's decision such party files a notice of intention to appeal and an appeal brief within 20 days of such decision.

(2) When an appeal is taken from the decision of the Presiding Officer, any party may file a brief with respect to such appeal. The brief shall be filed within the same time limits as the appellant's brief.

(3) Any brief filed pursuant to this paragraph shall contain in the order indicated, the following:

(i) A subject index of the matter in the brief, with page references, and a table of cases (alphabetically arranged), textbooks, statutes, and other material cited, with page references thereto;

(ii) A specification of the issues intended to be appealed;

(iii) The argument, presenting clearly the points of fact and law relied upon in support of the position taken on each issue, with specific page references to the record and legal or other material relied upon; and

(iv) A proposed order for the Environmental Appeals Board's consideration if different from the order contained in the Presiding Officer's decision.

(4) No brief in excess of 15 pages shall be filed without leave of the Environmental Appeals Board.

(5) Oral argument will be allowed only in the discretion of the Environmental Appeals Board.

(u) *Review of the Presiding Officer's decision in absence of appeal.* (1) If, after the expiration of the period for taking an appeal as provided for by paragraph (t) of this section, no notice of intention to appeal the decision of the Presiding Officer has been filed, or if filed, not perfected, the Hearing Clerk shall so notify the Environmental Appeals Board.

(2) The Environmental Appeals Board, upon receipt of notice from the Hearing Clerk that no notice of intention to appeal has been filed, or if filed, not perfected pursuant to paragraph (t)(1) of this section, may, on its own motion, within 14 days after notice from the Hearing Clerk, review the decision of the Presiding Officer. Notice of the intention of the Environmental Appeals Board to review the decision of the Presiding Officer shall be given to all parties and shall set forth the scope of such review and the issues which shall be considered and shall make provisions for filing of briefs.

(v) *Decision of appeal or review.* (1) Upon appeal from or review of the Presiding Officer's the Environmental Appeals Board shall consider such parts of the record as are cited or as may be necessary to resolve the issues presented and in addition shall, to the extent necessary or desirable, exercise all the powers which it could have exercised if it had presided at the hearing.

(2) In rendering its decision, the Environmental Appeals Board shall adopt, modify, or set aside the findings, conclusions, and order contained in the decision of the Presiding Officer and shall set forth in its decision a statement of the reasons or bases for this action.

(3) In those cases where the Environmental Appeals Board determines that it should have further information or additional views of the parties as to

the form and content of the rule or order to be issued, the Environmental Appeals Board, in its discretion, may without final action pending the receipt of such additional information or views, or may remand the case to the Presiding Officer.

(4) Any decision rendered under this paragraph which completed disposition of a case shall be a final decision of the Environmental Appeals Board.

(w) *Reconsideration.* Any party may file with the Environmental Appeals Board a petition for reconsideration of such decision setting forth the relief desired and the grounds in support thereof. This petition must be filed within 20 days of the issuance of the Environmental Appeals Board's decision, and must be confined to new questions raised by the decision or final order and which the petitioner had no opportunity to argue before the Presiding Officer or the Environmental Appeals Board, unless otherwise specified by the Environmental Appeals Board. Subsequent to the expiration of the period for petitioning for reconsideration, the Environmental Appeals Board may, in its discretion and for good cause shown, grant the manufacturer a hearing to contest the compliance level or the penalty calculation even though such issues may have been raised in the previous proceeding. Any party desiring to oppose such a petition, shall file an answer thereto within 10 days after the filing of the petition. The filing of a petition for reconsideration shall not operate to stay the effective date of the decision or order or to toll the running of any statutory time period affecting such decision or order unless specifically so ordered by the Environmental Appeals Board.

(x) *Accelerated decision, dismissal.* (1) The Presiding Officer, upon motion of any party or sua sponte, may at any time render an accelerated decision in favor of the Agency or the manufacturer as to all or any part of the proceeding, without further hearing or upon such limited additional evidence such as affidavits as he may require, or dismiss any party with prejudice, for any of the following reasons:

(i) Failure to state a claim upon which relief can be granted, or direct or collateral estoppel;

(ii) The lack of any genuine issue of material fact, causing a party to be entitled to judgment as a matter of law; or

(iii) Such other and further reasons as are just, including specifically, failure to obey a procedural order of the Presiding Officer.

(2) If under this paragraph an accelerated decision is issued as to all the issues and claims joined in the proceeding, the decision shall be treated for the purposes of these procedures as the decision of the Presiding Officer, as provided in paragraph (s) of this section.

(3) If under this paragraph, judgment is rendered on less than all issues or claims in the proceeding, the Presiding Officer shall determine what material facts exist without substantial controversy and what material facts are actually and in good faith controverted. He shall thereupon issue an order specifying the facts which appear without substantial controversy, and the issues and claims upon which the hearing will proceed.

(y) *Conclusion of hearing.* (1) If, after the expiration of the period for taking an appeal as provided by paragraph (t) of this section, no appeal has been taken from the Presiding Officer's decision, and after the expiration of the period for review by the Environmental Appeals Board on its own motion as provided for by paragraph (u) of this section, the Environmental Appeals Board does not move to review such decision, the hearing will be deemed to have ended at the expiration of all periods allowed for such appeal and review.

(2) If an appeal of the Presiding Officer's decision is taken pursuant to paragraph (t) of this section, or if, in the absence of such appeal the Environmental Appeals Board moves to review the decision of the Presiding Officer pursuant to paragraph (u) of this section, the hearing will be deemed to have ended upon issuance of a final decision by the Environmental Appeals Board.

(z) *Judicial review.* (1) The Administrator hereby designates the General Counsel of the Environmental Protection Agency as the officer upon whom any copies for judicial review shall be

served. Such officer shall be responsible for filing in the court the record on which the order of the Environmental Appeals Board is based.

(2) [Reserved]

[50 FR 35388, Aug. 30, 1985, as amended at 50 FR 53467, Dec. 31, 1985; 55 FR 46630, Nov. 5, 1990; 57 FR 5333, Feb. 13, 1992]

§86.1116–87 Treatment of confidential information.

(a) Any manufacturer may assert that some or all of the information submitted pursuant to this subpart is entitled to confidential treatment as provided by 40 CFR part 2, subpart B.

(b) Any claim of confidentiality must accompany the information at the time it is submitted to EPA.

(c) To assert that information submitted pursuant to this subpart is confidential, a manufacturer must indicate clearly the items of information claimed confidential by marking, circling, bracketing, stamping, or otherwise specifying the confidential information. Furthermore, EPA requests, but does not require, that the submitter also provide a second copy of its submittal from which all confidential information has been deleted. If a need arises to publicly release nonconfidential information, EPA will assume that the submitter has accurately deleted the confidential information from this second copy.

(d) If a claim is made that some or all of the information submitted pursuant to this subpart is entitled to confidential treatment, the information covered by that confidentiality claim will be disclosed by the Environmental Appeals Board only to the extent and by means of the procedures set forth in part 2, subpart B, of this chapter.

(e) Information provided without a claim of confidentiality at the time of submission may be made available to the public by EPA without further notice to the submitter, in accordance with 40 CFR 2.204(c)(2)(i)(A).

[50 FR 34798, Aug. 27, 1985, as amended at 57 FR 5334, Feb. 13, 1992]

Subpart M—Evaporative Emission Test Procedures for New Gasoline-Fueled, Natural Gas-Fueled, Liquefied Petroleum Gas-Fueled and Methanol-Fueled Heavy-Duty Vehicles

AUTHORITY: Secs. 202, 206, 301, Clean Air Act as amended, 42 U.S.C. 7521, 7525, 7601.

SOURCE: 48 FR 1456, Jan. 12, 1983, unless otherwise noted.

§86.1201–90 Applicability.

(a) The provisions of this subpart are applicable to new gasoline-fueled, natural gas-fueled, liquefied petroleum gas-fueled and methanol-fueled heavy-duty vehicles.

(b) Provisions of this subpart apply to tests performed by both the Administrator and motor vehicle manufacturers.

(c) Test procedures and equipment other than those described in this subpart may be used by the vehicle manufacturer if shown to yield results which correlate with results yielded by those described in this subpart (with the reference driving schedule described in §86.1215–85(a)) and if approved in advance by the Administrator.

[54 FR 14562, Apr. 11, 1989, as amended at 59 FR 48521, Sept. 21, 1994]

§86.1202–85 Definitions.

Applicable definitions in §§86.077–2, 86.078–2, 86.079–2, 86.080–2, 86.081–2, 86.082–2 and 86.085–2 apply to this subpart.

§86.1203–85 Abbreviations.

The abbreviations in §86.079–3 apply to this subpart.

§86.1204 Section numbering.

The section numbering system set forth in §86.104 applies to this subpart.

[59 FR 48521, Sept. 21, 1994]

§86.1205–90 Introduction; structure of subpart.

(a) This subpart describes the equipment required and the procedures to

follow in order to determine evaporative emission levels from gasoline-fueled, natural gas-fueled, liquefied petroleum gas-fueled and methanol-fueled heavy-duty vehicles.

(b) Three topics are addressed in this subpart. Sections 86.1206 through 86.1215 set forth specifications and equipment requirements; §§ 86.1216 through 86.1226 discuss calibration methods and frequency; test procedures and data requirements are listed in §§ 86.1227 through 86.1246.

[54 FR 14562, Apr. 11, 1989, as amended at 58 FR 16047, Mar. 24, 1993; 59 FR 48521, Sept. 21, 1994]

§ 86.1206–90 Equipment required; overview.

This subpart specifies procedures for testing of gasoline-fueled and methanol-fueled heavy-duty vehicles. Equipment required and specifications are as follows:

(a) *Evaporative emissions tests.* § 86.1207 specifies the necessary equipment.

(b) *Fuel, analytical gas, and driving schedule specifications.* Fuel specifications for emission testing and for service accumulation are specified in § 86.1213. Analytical gases are specified in § 86.1214. Both vehicle preconditioning for the diurnal loss test and vehicle operation prior to the hot soak loss test include operation on a chassis dynamometer. The driving cycle (EPA heavy-duty vehicle urban dynamometer driving schedule) is specified in § 86.1215.

[54 FR 14562, Apr. 11, 1989]

§ 86.1206–96 Equipment required; overview.

This subpart specifies procedures for testing of gasoline-fueled, natural gas-fueled, liquefied petroleum gas-fueled and methanol-fueled heavy-duty vehicles. Equipment required and specifications are as follows:

(a) *Evaporative emission tests.* Section 86.1207 specifies the necessary equipment.

(b) *Fuel, analytical gas, and driving schedule specifications.* Fuel specifications for emission testing and for service accumulation are specified in § 86.1213. Analytical gases are specified in § 86.1214. Evaporative testing requires vehicle operation on a chassis dynamometer. The driving cycle (EPA Heavy-Duty Vehicle Urban Dynamometer Driving Schedule) is specified in § 86.1215.

[58 FR 16047, Mar. 24, 1993, as amended at 59 FR 48521, Sept. 21, 1994]

§ 86.1207–90 Sampling and analytical system; evaporative emissions.

The following is a description of the components which will be used in evaporative emissions sampling systems for testing under this subpart.

(a) *Evaporative emission measurement enclosure.* The enclosure shall be readily sealable, rectangular in shape, with space for personnel access to all sides of the vehicle. When sealed, the enclosure shall be gas tight in accordance with § 86.1217. Interior surfaces must be impermeable and non-reactive to hydrocarbons and to methanol (if used for methanol-fueled vehicles). One surface should be of flexible, impermeable and non-reactive material to allow for minor volume changes, resulting from temperature changes. Wall design should promote maximum dissipation of heat, and if artificial cooling is used, interior surface temperatures shall not be less than 68 °F (20 °C).

(b) *Evaporative emission hydrocarbon and methanol analyzers.* (1) For gasoline and methanol-fueled vehicles a hydrocarbon analyzer utilizing the hydrogen flame ionization principle (FID) shall be used to monitor the atmosphere within the enclosure (a heated FID (HFID)(235°±15 °F (113±8 °C)) is recommended for methanol-fueled vehicles). Instrument bypass flow may be returned to the enclosure. The FID shall have a response time to 90 percent of final reading of less than 1.5 seconds, and be capable of meeting performance requirements expressed as a function of Cstd: where Cstd is the specific enclosure hydrocarbon level, in ppm, corresponding to the evaporative emission standard:

(i) Stability of the analyzer shall be better than 0.01 Cstd ppm at zero and span over a 15-minute period on all ranges used.

(ii) Repeatability of the analyzer, expressed as one standard deviation, shall be better than 0.005 Cstd ppm on all ranges used.

(2) For methanol-fueled vehicles, a methanol sampling and analyzing system is required in addition to the FID analyzer. The methanol sampling equipment shall consist of impingers for collecting the methanol sample and appropriate equipment for drawing the sample through the impingers. The analytical equipment shall consist of a gas chromatograph equipped with a flame ionization detector. (Note: For 1990 through 1994 model year methanol-fueled vehicles, a HFID, calibrated on methanol may be used in place of the HFID calibrated on propane plus the methanol impingers and associated analytical equipment.)

(3) The methanol sampling system described in paragraph (b)(2) of this section shall be designed such that, if a test vehicle emitted the maximum allowable level of methanol (based on all applicable standards) during any phase of the test, the measured concentration in the primary impinger would exceed either 25 mg/l or a concentration equal to 25 times the limit of detection for the GC analyzer, and such that the primary impinger collects at least 90 percent of the analyte in the samples. The remaining analyte shall be collected by the secondary impinger. The provisions of this paragraph apply to the design of sampling systems, not to individual tests.

(c) *Evaporative emission hydrocarbon and methanol data recording system.* (1) The electrical output of the FID used for measuring hydrocarbons (or hydrocarbons plus methanol as appropriate) shall be recorded at least at the initiation and termination of each diurnal or hot soak. The recording may be by means of a strip chart potentiometric recorder, by use of an on-line computer system or other suitable means. In any case, the recording system must have operational characteristics (signal to noise ratio, speed of response, etc.) equivalent to or better than those of the signal source being recorded, and must provide a permanent record of results. The record shall show a positive indication of the initiation and completion of each diurnal or hot soak along with the time elapsed between initiation and completion of each soak.

(2) For the methanol sample, permanent records shall be made of the following: the volumes of deionized water introduced into each impinger, the rate and time of sample collection and the chromatogram of the analyzed sample.

(d) *Tank fuel heating system.* The tank fuel heating system shall consist of a heat source and a temperature controller. A typical heat source is a 2,000 W heating pad. Other sources may be used as required by circumstances. The temperature controller may be manual, such as a variable voltage transformer, or may be automated. The heating system must not cause hot spots on the tank wetted surface which could cause local overheating of the fuel. Heat must not be applied to the vapor in the tank above the liquid fuel. The temperature controller must be capable of controlling the fuel tank temperature during the diurnal soak to within ±3 °F (±1.7 °C) of the following equation:

(1) $F = T_o + (0.4)t$

(2) *For SI units,* $C = T_o + (2/9)t$

Where:

F = Temperature in °F.

C = Temperature in °C.

t = Time since start of test in minutes.

T_o = Initial temperature in °F (or in °C for SI units).

(e) *Temperature recording system.* Strip chart recorder(s) or an automatic data processor shall be used to record enclosure ambient and vehicle fuel tank temperature at least once every minute. The temperature recorder or data processor shall have a time accuracy of ±15s, a time precision of ±15s and be capable of resolving temperature to ±0.75 °F (±0.42 °C). The temperature recording system (recorder and sensor) shall have an accuracy of ±3 °F (±1.7 °C). Two ambient temperature sensors, connected to provide one average output, shall be located in the enclosure. These sensors shall be located at the approximate vertical centerline of each side wall extending 4 inches (nominally) into the enclosure at a height of 3±0.5 ft (0.9±0.2 m). The vehicle fuel tank temperature sensor shall be located in the fuel tank so as to measure the temperature of the prescribed test fuel at the approximate mid-volume of the fuel. Manufacturers shall arrange that vehicles furnished

for testing at Federal certification facilities be equipped with iron-constantan Type J thermocouples for measurement of fuel tank temperature.

(f) *Purge blower.* One or more portable or fixed blowers shall be used to purge the enclosure. The blowers shall have sufficient flow capacity to reduce the enclosure hydrocarbon and/or methanol concentration from the test level to the ambient level between tests. Actual flow capacity will depend upon the time available between tests.

(g) *Mixing blower.* One or more blowers or fans with a total capacity of 250 to 750 cfm per 1,000 ft^3 of enclosure volume shall be used to mix the contents of the enclosure during evaporative emission testing. The mixing blower(s) shall be arranged such that a uniform concentration is maintained. No portion of the air stream shall be directed towards the vehicle.

[54 FR 14562, Apr. 11, 1989, as amended at 60 FR 34358, June 30, 1995]

§ 86.1207–96 Sampling and analytical systems; evaporative emissions.

(a) *Testing enclosures*—(1) *Diurnal emission test.* The enclosure shall be readily sealable, rectangular in shape, with space for personnel access to all sides of the vehicle. When sealed, the enclosure shall be gas tight in accordance with § 86.1217–96. Interior surfaces must be impermeable and nonreactive to hydrocarbons (and to methanol, if the enclosure is used for methanol-fueled vehicles). The temperature conditioning system shall be capable of controlling the internal enclosure air temperature to follow the prescribed temperature versus time cycle as specified in § 86.1233–96 and appendix II of this part, within an instantaneous tolerance of ±3.0 °F of the nominal temperature versus time profile throughout the test, and an average tolerance of 2.0 °F over the duration of the test (where the average is calculated using the absolute value of each measured deviation). The control system shall be tuned to provide a smooth temperature pattern that has a minimum of overshoot, hunting, and instability about the desired long-term ambient temperature profile. Interior surface temperatures shall not be less than 40 °F at any time during the diurnal emission test. To accommodate the volume changes due to enclosure temperature changes, either a variable-volume or fixed-volume enclosure may be used for diurnal emission testing:

(i) *Variable-volume enclosure.* The variable-volume enclosure expands and contracts in response to the temperature change of the air mass in the enclosure. Two potential means of accommodating the internal volume changes are moveable panel(s), or a bellows design, in which impermeable bag(s) inside the enclosure expand and contract in response to internal pressure changes by exchanging air from outside the enclosure. Any design for volume accommodation must maintain the integrity of the enclosure as specified in § 86.1217–96 over the specified temperature range. Any method of volume accommodation shall limit the differential between the enclosure internal pressure and the barometric pressure to a maximum value of ±2.0 inches of water. The enclosure shall be capable of latching to a fixed volume. A variable-volume enclosure must be capable of accommodating a ±7 percent change from its ''nominal volume'' (see § 86.1217–96(b)), accounting for temperature and barometric pressure variation during testing.

(ii) *Fixed-volume enclosure.* The fixed-volume enclosure shall be constructed with rigid panels that maintain a fixed enclosure volume, and meet the following requirements.

(A) The enclosure shall be equipped with a mechanism to maintain a fixed internal air volume. This may be accomplished either by withdrawing air at a constant rate and providing make-up air as needed, or by reversing the flow of air into and out of the enclosure in response to rising or falling temperatures. If inlet air is added continuously throughout the test, it should be filtered with activated carbon to provide a relatively low and constant hydrocarbon level. Any method of volume accommodation shall maintain the differential between the enclosure internal pressure and the barometric pressure to a maximum value of ±2.0 inches of water.

(B) The equipment shall be capable of measuring the mass of hydrocarbon and methanol (if the enclosure is used

for methanol-fueled vehicles) in the inlet and outlet flow streams with a resolution of 0.01 gram per hour. A bag sampling system may be used to collect a proportional sample of the air withdrawn from and admitted to the enclosure. Alternatively, the inlet and outlet flow streams may be continuously analyzed using an on-line FID analyzer and integrated with the flow measurements to provide a continuous record of the mass hydrocarbon and methanol removal.

(2) *Running loss test.* The enclosure shall be readily sealable, rectangular in shape, with space for personnel access to all sides of the vehicle. When sealed, the enclosure shall be gas tight in accordance with § 86.1217–96. The enclosure may be equipped with a personnel door, provided that the enclosure can still meet the requirements of § 86.1217–96 with the door installed. Interior surfaces must be impermeable and nonreactive to hydrocarbons and to methanol (if the enclosure is used for methanol-fueled vehicles). Interior surface temperatures shall not be less than 40 °F. If a running loss enclosure meets all the requirements of paragraph (a)(1) of this section, it may be used as a diurnal evaporative emission enclosure. The enclosure must contain a dynamometer that meets the requirements of § 86.1208. Provisions shall be made to remove exhaust gases from the enclosure. During the running loss test, ambient temperatures must be maintained at 95±5 °F (95±2 °F on average). An air or oxygen cylinder with an attached self-contained breathing apparatus may be provided for the vehicle operator. The air required for vehicle operation shall be provided by one of the following methods:

(i) The running loss enclosure may be equipped to supply air to the vehicle, at a temperature of 95±5 °F, from sources outside of the running loss enclosure directly into the operating engine's air intake system. Supplemental air requirements (e.g., for an air pump) shall be supplied by drawing air from the engine intake source.

(ii) If it is shown to yield equivalent or superior results, the running loss enclosure may be designed with an air makeup system that brings outside air into the enclosure to accommodate the aspiration needs of the engine and any auxiliary devices. The makeup air shall be monitored to establish the background hydrocarbon levels (or hydrocarbon and methanol, levels, if applicable) of the makeup air. A filter may be used to provide dry air with a stable concentration of background hydrocarbon. The makeup-air vent shall be readily sealable for calibration of the enclosure and other purposes. For calculation of running loss emissions, it may be assumed that the hydrocarbon and methanol concentration in the air consumed by the vehicle is the same as that of the rest of the air in the enclosure.

(3) *Hot soak test.* The hot soak test may be conducted by holding the vehicle in an enclosure that meets the requirements for either diurnal emission or running loss tests. The enclosure shall be configured to provide an internal enclosure ambient temperature of 95±10 °F for the first 5 minutes, and 95±5 °F (95±2 °F on average) for the remainder of the hot soak test.

(i) If the hot soak test is conducted in the same enclosure as the immediately preceding running loss test, interior surface temperatures shall not be below 70 °F for the last 55 minutes of the hot soak test.

(ii) If the hot soak test is not conducted in the same enclosure as the immediately preceding running loss test, interior surface temperatures shall not be below 70 °F for the duration of the hot soak test.

(b) *Evaporative emission hydrocarbon and methanol analyzers.* (1) For gasoline-, liquefied petroleum gas-, natural gas- and methanol-fueled vehicles a hydrocarbon analyzer utilizing the hydrogen flame ionization principle (FID) shall be used to monitor the atmosphere within the enclosure (a heated FID (HFID)(235°±15 °F (113±8 °C)) is recommended for methanol-fueled vehicles). Provided evaporative emission results are not affected, a probe may be used to detect or verify hydrocarbon sources during a running loss test. Instrument bypass flow may be returned to the enclosure. The FID shall have a response time to 90 percent of final reading of less than 1.5 seconds.

(2) For methanol-fueled vehicles, a methanol sampling and analyzing system is required in addition to the FID analyzer. The methanol sampling equipment shall consist of impingers for collecting the methanol sample and appropriate equipment for drawing the sample through the impingers. The analytical equipment shall consist of a gas chromatograph equipped with a flame ionization detector.

(3) The methanol sampling system described in paragraph (b)(2) of this section shall be designed such that, if a test vehicle emitted the maximum allowable level of methanol (based on all applicable standards) during any phase of the test, the measured concentration in the primary impinger would exceed either 25 mg/l or a concentration equal to 25 times the limit of detection for the GC analyzer, and such that the primary impinger collects at least 90 percent of the analyte in the samples. The remaining analyte shall be collected by the secondary impinger. The provisions of this paragraph apply to the design of sampling systems, not to individual tests.

(c) *Evaporative emission hydrocarbon and methanol data recording system.* (1) The electrical output of the FID used for measuring hydrocarbons (or hydrocarbons plus methanol, as appropriate) shall be recorded at least at the initiation and termination of each running loss and hot soak test, and at least at the initiation and termination of the enclosure sampling period(s) for the diurnal emission test, as described in § 86.1233. The recording may be taken by means of a strip chart potentiometric recorder, by use of an on-line computer system or other suitable means. In any case, the recording system must have operational characteristics (signal-to-noise ratio, speed of response, etc.) equivalent to or better than those of the signal source being recorded, and must provide a permanent record of results. The record shall show a positive indication of the initiation and completion of each hot soak, running loss, or diurnal emission test (including initiation and completion of sampling period(s)), along with the time elapsed during each soak.

(2) For the methanol sample, permanent records shall be made of the following: the volumes of deionized water introduced into each impinger, the rate and time of sample collection and the chromatogram of the analyzed sample.

(d) *Fuel temperature control system.* Fuel temperatures of the test vehicle shall be controlled, as specified in § 86.1234(g)(1)(xv), with the following combination of fans. The control system shall be tuned and operated to provide a smooth and continuous fuel temperature profile that is representative of the on-road temperature profile. The running loss test configuration should be designed to avoid heating or cooling the fuel tank's vapor space in a way that would cause vapor temperature behavior to be unrepresentative of the vehicle's on-road profile.

(1) A vehicle cooling fan shall discharge air to the front of the vehicle. The fan shall be a road-speed modulated fan that is controlled to a discharge velocity that follows the dynamometer roll speed, at least up to speeds of 30 mph, throughout the driving cycle. If a warning light or gauge indicates that the vehicle's engine coolant has overheated, subsequent test runs on the that vehicle must include a vehicle cooling fan that follows the dynamometer roll speed at all speeds throughout the test cycle. The fan may direct airflow to both the vehicle radiator air inlet(s) and the vehicle underbody.

(2) An additional fan may be used to discharge airflow from the front of the vehicle directly to the vehicle underbody to control fuel temperatures. Such a fan shall provide a total discharge airflow not to exceed 8,000 cfm.

(3) Additional fans may be used to route heating or cooling air directly at the bottom of the vehicle's fuel tank. The air supplied to the tank shall be between 85° and 160 °F, with a total discharge airflow not to exceed 4,000 cfm. For exceptional circumstances, manufacturers may direct up to 6,000 cfm at the bottom of the fuel tank with the advance approval of the Administrator.

(4) Direct fuel heating may be needed for canister preconditioning, as specified in § 86.1232(j)(2). Also, under exceptional circumstances in which airflow alone is insufficient to control fuel temperatures during the running loss

test, direct fuel tank heating may be used (see § 86.1234–96(g)(1)(xv)). The heating system must not cause hot spots on the tank wetted surface that could cause local overheating of the fuel. Heat must not be applied directly to the tank's vapor space, nor to the liquid-vapor interface.

(e) *Temperature recording system.* A strip chart potentiometric recorder, an on-line computer system, or other suitable means shall be used to record enclosure ambient temperature during all evaporative emission test segments, as well as vehicle fuel tank temperature during the running loss test. The recording system shall record each temperature at least once every minute. The recording system shall be capable of resolving time to ±15 s and capable of resolving temperature to ±0.75 °F (±0.42 °C). The temperature recording system (recorder and sensor) shall have an accuracy of ±3 °F (±1.7 °C). The recorder (data processor) shall have a time accuracy of ±15 s and a precision of ±15 s. Enclosures shall be equipped with two ambient temperature sensors, connected to provide one average output, located 3 feet above the floor at the approximate mid-length of each side wall of the enclosure and within 3 to 12 inches of each side wall. For diurnal emission testing, an additional temperature sensor shall be located underneath the vehicle to provide a temperature measurement representative of the air temperature under the fuel tank. For running loss testing, an ambient temperature sensor shall be located at the inlet to the fan that provides engine cooling. Manufacturers shall arrange that vehicles furnished for testing at federal certification facilities be equipped with temperature sensors for measurement of fuel tank temperatures. Vehicles shall be equipped with two temperature sensors installed to provide an average liquid fuel temperature. The temperature sensors shall be placed to measure the temperature at the mid-volume of the liquid fuel at a fill level of 40 percent of nominal tank capacity. An additional temperature sensor may be placed to measure vapor temperatures approximately at the mid-volume of the vapor space, though measurement of vapor temperatures is optional during the running loss test. In-tank temperature sensors are not required for the supplemental two-diurnal test sequence specified in § 86.1230–96.

(f) *Pressure recording system.* A strip chart potentiometric recorder, an on-line computer system, or other suitable means, shall be used to record the enclosure gage pressure for any testing in an enclosure, as well as the vehicle's fuel tank pressure during the running loss test and the outdoor driving procedure specified in § 86.1229–85(d). Fuel tank pressure measurement and recording equipment are optional during the running loss test. The recording system shall record each pressure at least once every minute. The recording system shall be capable of resolving time to ±15 s and capable of resolving pressure to ±0.1 inches of water. The pressure recording system (recorder and sensor) shall have an accuracy of ±1.0 inch of water. The recorder (data processor) shall have a time accuracy of ±15 s and a precision of ±15 s. The pressure transducer shall be installed to measure the pressure in the vapor space of the fuel tank.

(g) *Purge blower.* One or more portable or fixed blowers shall be used to purge the enclosure. The blowers shall have sufficient flow capacity to reduce the enclosure hydrocarbon and/or methanol concentration from the test level to the ambient level between tests. Actual flow capacity will depend upon the time available between tests.

(h) *Mixing blower.* Blowers or fans shall be used to mix the enclosure contents during evaporative emission testing. The inlets and outlets of the air circulation blower(s) shall be configured to provide a well dispersed air circulation pattern that produces effective internal mixing and avoids significant temperature or hydrocarbon stratification. Maintenance of uniform concentrations throughout the enclosure is important to the accuracy of testing.

(1) *Diurnal emission test.* Blowers or fans shall have a capacity of 0.8±0.2 cfm per cubic foot of the nominal enclosure volume for mixing in the enclosure. Additional fans may be used to maintain a minimum wind speed of 5 mph (8 km/h) under the fuel tank of the test vehicle.

(2) *Running loss test.* Blowers or fans shall have a total capacity of at least 1.0 cfm per cubic foot of the nominal enclosure volume.

(3) *Hot soak test.* Blowers or fans must have a capacity of 0.8±0.2 cfm per cubic foot of the nominal enclosure volume. Circulated air shall not be aimed directly at the vehicle.

(i) *Point-source running loss measurement facility.* Some system requirements pertain specifically to running loss testing by the point-source method, in which emissions from potential sources are collected and routed to a sampling system. Emissions are sampled with the same equipment and techniques as for exhaust emission measurement. The test environment must contain a dynamometer that meets the requirements of § 86.108. During the running loss test, ambient temperatures must be maintained at 95±5 °F (95±2 °F on average). An air or oxygen cylinder with an attached self-contained breathing apparatus may be provided for the vehicle operator.

(1) The running loss vapor vent collection system shall be configured to collect all running loss emissions from each of the discrete point sources that function as vehicle fuel system vapor vents, and transport the collected vapor emissions to a CFV- or PDP-based dilution and measurement system. The collection system shall consist of a collector at each vehicle vapor vent, lengths of heated sample line connecting each collector to the inlet of the heated sample pump, and lengths of heated sample line connecting the outlet of the heated sample pump to the inlet of the running loss fuel vapor sampling system. Up to 3 feet of unheated line connecting each of the vapor collectors to the heated sample lines shall be allowed. Each heated sample pump and its associated sample lines shall be maintained at a temperature between 175 °F and 200 °F to prevent condensation of fuel vapor in the sample lines. The heated sample pump(s) and its associated flow controls shall be configured and operated to draw a flow of ambient air into each collector at a flow rate of at least 0.67 cfm. The flow controls on each heated sampling system shall include an indicating flow meter that provides an alarm output to the data recording system if the flow rate drops below 0.67 cfm by more than 5 percent. The collector inlet for each discrete vapor vent shall be placed in proximity to the vent as necessary to capture any fuel vapor emissions without significantly affecting flow or pressure of the normal action of the vent. The collector inlets shall be designed to interface with the configuration and orientation of each specific vapor vent. For vapor vents that terminate in a tube or hose barb, a short length of tubing of an inside diameter larger throughout its length than the inside diameter of the vent outlet may be used to extend the vent into the mouth of the collector. For those vapor vent designs that are not compatible with such collector configurations, the vehicle manufacturer shall supply a collector that is configured to interface with the vapor vent design and that terminates in a fitting that is capable of capturing all vapor emitted from the vent. The Administrator may test for running losses by the point-source method without heating sample lines or pumps.

(2) The running loss fuel vapor sampling system shall be a CFV- or PDP-based dilution and measurement system that further dilutes the running loss fuel vapors collected by the vapor vent collection system(s) with ambient air, collects continuously proportional samples of the diluted running loss vapors and dilution air in sample bags, and measures the total dilute flow through the sampling system over each test interval. In practice, the system shall be configured and operated in a manner that is directly analogous to an exhaust emissions constant volume sampling system, except that the input flow to the system is the flow from the running loss vapor vent collection system(s) instead of vehicle exhaust flow. The system shall be configured and operated to meet the following requirements:

(i) The running loss fuel vapor sampling system shall be designed to measure the true mass of fuel vapor emissions collected by the running loss vapor vent collection system from the specified fuel vapor vents. The total volume of the mixture of running loss emissions and dilution air shall be

measured and a continuously proportioned sample of volume shall be collected for analysis. Mass emissions shall be determined from the sample concentration and total flow over the test period.

(ii) The PDP–CVS shall consist of a dilution air filter and mixing assembly, heat exchanger, positive-displacement pump, sampling system, and associated valves, pressure and temperature sensors. The PDP–CVS shall conform to the following requirements:

(A) The gas mixture temperature, measured at a point immediately ahead of the positive-displacement pump, shall be within ±10 °F of the designed operating temperature at the start of the test. The gas mixture temperature variation from its value at the start of the test shall be limited to ±10 °F during the entire test. The temperature measuring system shall have an accuracy and precision of ±2 °F.

(B) The pressure gauges shall have an accuracy and precision of ±1.6 inches of water (±0.4 kPa).

(C) The flow capacity of the CVS shall not exceed 350 cfm.

(D) Sample collection bags for dilution air and running loss fuel vapor samples shall be sufficient size so as not to impede sample flow.

(iii) The CFV sample system shall consist of a dilution air filter and mixing assembly, a sampling venturi, a critical flow venturi, a sampling system and assorted valves, and pressure and temperature sensors. The CFV sample system shall conform to the following requirements:

(A) The temperature measuring system shall have an accuracy and precision of ±2 °F and a response time of 0.100 seconds of 62.5 percent of a temperature change (as measured in hot silicone oil).

(B) The pressure measuring system shall have an accuracy and precision of ±1.6 inches of water (0.4 kPa).

(C) The flow capacity of the CVS shall not exceed 350 cfm.

(D) Sample collection bags for dilution air and running loss fuel vapor samples shall be of sufficient size so as not to impede sample flow.

(3) An on-line computer system or strip-chart recorder shall be used to record the following additional parameters during the running loss test sequence:

(i) CFV (if used) inlet temperature and pressure.

(ii) PDP (if used) inlet temperature, pressure, and differential pressure.

[58 FR 16047, Mar. 24, 1993, as amended at 59 FR 48521, Sept. 21, 1994; 60 FR 34358, June 30, 1995; 60 FR 43898, Aug. 23, 1995]

§86.1213–90 Fuel specifications.

(a) Gasoline having the following specifications will be used in emissions testing for gasoline-fueled vehicles.

Item	ASTM	Value
Octane, research, min	D2699	93
Sensitivity, min	.....	7.5
Lead (organic), g/U.S. gal	D3237	0.050[1]
(g/liter)	.....	(0.013)[1]
Distillation range:		
IBP, °F	D86	75–95
(°C)	.....	(23.9–35)
10 pct. point, °F	D86	120–135
(°C)	.....	(48.9–57.2)
50 pct. point, °F	D86	200–230
(°C)	.....	(93.3–110)
90 pct. point, °F	D86	300–325
(°C)	.....	(148.9–162.8)
EP, max. °F	D86	415
(°C)	.....	(212.8)
Sulphur, max. wt. pct	D1266	0.10
Phosphorous, max. g/U.S. gal	D3231	0.005
(g/liter)	.....	(0.0013)
RVP, psi	D323	8.7–9.2
(kPa)	.....	(60.0–63.4)
Hydrocarbon composition:		
Olefins, max. pct	D1319	10
Aromatics, max. pct	D1319	35
Saturates	D1319	[2]

[1] Maximum.
[2] Remainder.

(b)(1) Unleaded gasoline representative of commercial gasoline which will be generally available through retail outlets shall be used in service accumulation.

(2) The octane rating of the gasoline used shall be no higher than 1.0 Research octane number above the minimum recommended by the manufacturer and have a minimum sensitivity of 7.5 octane numbers, where sensitivity is defined as the Research octane number minus the Motor octane number.

(3) The Reid Vapor Pressure of the gasoline used shall be characteristic of the motor fuel used during the season in which the service accumulation takes place.

(c) Methanol fuel used in evaporative emission testing and in service accumulation of methanol-fueled vehicles shall be representative of commercially available methanol fuel and shall consist of at least 50 percent methanol (CH_3OH) by volume.

(1) Manufacturers shall recommend the methanol fuel to be used for testing and service accumulation in accordance with paragraph (c) of this section.

(2) The Administrator shall determine the methanol fuel to be used for testing and service accumulation.

(d) Other methanol fuels may be used for testing and service accumulation provided:

(1) They are commercially available, and

(2) Information, acceptable to the Administrator, is provided to show that only the designated fuel would be used in customer service, and

(3) Use of a fuel listed under paragraph (c)(2) of this section would have a detrimental effect on emissions or durability, and

(4) Written approval from the Administrator of the fuel specifications must be provided prior to the start of testing.

(e) The specification range of the fuels to be used under paragraphs (b), (c), and (d) of this section shall be reported in accordance with § 86.090–21(b)(3).

(f) *Mixtures of petroleum and methanol fuels for flexible fuel vehicles.* (1) Mixtures of petroleum and methanol fuels used for exhaust and evaporative emission testing and service accumulation for flexible fuel vehicles shall be within the range of fuel mixtures for which the vehicle was designed.

(2) Manufacturer testing and service accumulation may be performed using only those mixtures (mixtures may be different for exhaust testing, evaporative testing, and service accumulation) expected to result in the highest emissions, provided:

(i) The fuels which constitute the mixture will be used in customer service, and

(ii) Information, acceptable to the Administrator, is provided by the manufacturer to show that the designated fuel mixtures would result in the highest emissions, and

(iii) Written approval from the Administrator of the fuel specifications must be provided prior to the start of testing.

(3) The specification range of the fuels to be used under paragraph (f)(2) of this section shall be reported in accordance with § 86.090–21(b)(3).

[53 FR 476, Jan. 7, 1988, as amended at 54 FR 14563, Apr. 11, 1989]

§ 86.1213–94 Fuel specifications.

(a) *Gasoline fuel.* (1) Gasoline having the following specifications will be used in emissions testing for gasoline-fueled vehicles.

Item	ASTM	Value
Octane, research, min.	D2699	93
Sensitivity, min.	.....	7.5
Lead (organic) g/U.S. gal	D3237	[1] 0.050
(g/liter)	.....	[1] (0.013)
Distillation range:		
IBP °F	D86	75–95
(°C)	.....	(23.9–35)
10 pct. point °F	D86	120–135
(°C)	.....	(48.9–57.2)
50 pct. point °F	D86	200–230
(°C)	.....	(93.3–110)
90 pct. point °F	D86	300–325
(°C)	.....	(148.9–162.8)
EP, max. °F	D86	415
(°C)	.....	(212.8)
Sulphur, max. wt. pct.	D1266	0.10
Phosphorous, max. g/U.S. gal.	D3231	0.005
(g/liter)	.....	(0.0013)
RVP, psi.	D323	8.7–9.2
(kPa)	.....	(60.0–63.4)
Hydrocarbon composition:		
Olefins, max. pct.	D1319	10
Aromatics, max. pct.	D1319	35
Saturates	D1319	([2])

[1] Maximum.
[2] Remainder.

(2)(i) Unleaded gasoline representative of commercial gasoline which will be generally available through retail outlets shall be used in service accumulation.

(ii) The octane rating of the gasoline used shall be no higher than 1.0 Research octane number above the minimum recommended by the manufacturer and have a minimum sensitivity of 7.5 octane numbers, where sensitivity is defined as the Research octane number minus the Motor octane number.

(iii) The Reid Vapor Pressure of the gasoline used shall be characteristic of the motor fuel used during the season in which the service accumulation takes place.

(3) The specification range of the gasoline to be used under paragraphs (a)(1) and (a)(2) of this section shall be reported in accordance with § 86.094–21(b)(3).

(b) *Methanol fuel.* (1) Methanol fuel used in evaporative emission testing and in service accumulation of methanol-fueled vehicles shall be representative of commercially available methanol fuel and shall consist of at least 50 percent methanol (CH_3OH) by volume.

(i) Manufacturers shall recommend the methanol fuel to be used for testing and service accumulation.

(ii) The Administrator shall determine the methanol fuel to be used for testing and service accumulation.

(2) Other methanol fuels may be used for testing and service accumulation provided:

(i) They are commercially available;

(ii) Information, acceptable to the Administrator, is provided to show that only the designated fuel would be used in customer service; and

(iii) Use of a fuel listed under paragraph (b)(1) of this section would have a detrimental effect on emissions or durability; and

(iv) Written approval from the Administrator of the fuel specifications must be provided prior to the start of testing.

(3) The specification range of the methanol fuels to be used under paragraphs (b)(1) and (b)(2) of this section shall be reported in accordance with § 86.094–21(b)(3).

(c) *Mixtures of petroleum and methanol fuels for flexible fuel vehicles.* (1) Mixtures of petroleum and methanol fuels used for exhaust and evaporative emission testing and service accumulation for flexible fuel vehicles shall consist of the gasoline listed in paragraph (a) of this section and the methanol fuel listed in paragraph (b) of this section, and shall be within the range fuel mixtures for which the vehicle was designed as reported in accordance with § 86.94–21. The Administrator may use any fuel within this range for testing.

(2) The fuel mixtures used by the manufacturers shall be sufficient to demonstrate compliance over the full design range, and shall include:

(i) For emission testing:

(A) The petroleum fuel specified in paragraph (a) of this section;

(B) A methanol fuel representative of the methanol fuel expected to be found in use, as specified in paragraph (d) of this section; and

(C) A combination of the fuels specified in paragraphs (c)(2)(i)(A) and (B) of this section that represents the composition which results in the highest Reid Vapor Pressure for the mixture. The mixture shall contain between nine and thirteen percent methanol.

(ii) For service accumulation, an alternating combination of the fuels specified in paragraphs (a) and (b) of this section that, based on good engineering judgement, demonstrates the durability of the emission control system. The fuels may be used as a single mixture or alternated.

(iii) Or, other combinations for testing or service accumulation which demonstrate compliance with the standards over the entire design range of the vehicle, provided that written approval is obtained from the Administrator prior to the start of testing.

(3) The specification range of the fuels to be used under paragraph (c) of this section shall be reported in accordance with § 86.094–21.

(d) *Natural gas fuel.* (1) Natural gas fuel having the following specifications will be used in evaporative emission testing and in service accumulation of natural gas-fueled vehicles shall be commercially available natural gas fuel.

NATURAL GAS CERTIFICATION FUEL SPECIFICATIONS

Item		ASTM	Value
Methane	min. mole pct	D1945	89.0
Ethane	max. mole pct	D1945	4.5
C_3 and higher	max. mole pct	D1945	2.3
C_6 and higher	max. mole pct	D1945	0.2
Oxygen	max. mole pct	D1945	0.6
Inert gases:			
Sum of CO_2 and N_2	max. mole pct	D1945	4.0
Odorant [1]			

[1] The natural gas at ambient conditions must have a distinctive odor potent enough for its presence to be detected down to a concentration in air of not over ⅕ (one-fifth) of the lower limit of flammability.

(2) Natural gas fuel representative of commercial natural gas which will be generally available through retail outlets shall be used in service accumulation.

(3) Other natural gas fuels may be used for emission testing and service accumulation provided:

(i) They are commercially available;

(ii) Information, acceptable to the Administrator, is provided to show that only the designated fuel would be used in customer service; and

(iii) Written approval from the Administrator of the fuel specifications must be provided prior to the start of testing.

(4) The specification range of the fuels to be used under paragraphs (d)(1), (d)(2) and (d)(3) of this section shall be reported in accordance with § 86.094–21(b)(3).

(e) *Liquefied petroleum gas-fuel.* (1) Liquefied petroleum gas-fuel used in evaporative emission testing and in service accumulation of liquefied petroleum gas-fueled vehicles shall be commercially available liquefied petroleum gas-fuel.

(i) Manufacturers shall recommend the liquefied petroleum gas-fuel to be used for testing and service accumulation.

(ii) The Administrator shall determine the liquefied petroleum gas-fuel to be used for testing and service accumulation.

(2) Other liquefied petroleum gas fuels may be used for testing and service accumulation provided:

(i) They are commercially available;

(ii) Information, acceptable to the Administrator, is provided to show that only the designated fuel would be used in customer service; and

(iii) Written approval from the Administrator of the fuel specifications must be provided prior to the start of testing.

(3) The specification range of the fuels to be used under paragraphs (e)(1) and (e)(2) of this section shall be measured in accordance with ASTM D2163–91 and reported in accordance with § 86.094–21(b)(3).

[59 FR 48521, Sept. 21, 1994, as amended at 34359, June 30, 1995]

§ 86.1214–85 Analytical gases.

(a) *Analyzer gases.* (1) Gases for the hydrocarbon analyzer shall be:

(i) Single blends of propane using air as the diluent; and

(ii) Optionally, for response factor determination, single blends of methanol using air as the diluent.

(2) Fuel for the evaporative emission enclosure FID (or HFID for methanol-fueled vehicles) shall be a blend of 40 ±2 percent hydrogen with the balance being helium. The mixture shall contain less than 1 ppm equivalent carbon response. 98 to 100 percent hydrogen fuel may be used with advance approval by the Administrator.

(3) The allowable zero air impurity concentration shall not exceed 1 ppm equivalent carbon response.

(4) ''Zero grade air'' includes artificial ''air'' consisting of a blend of nitrogen and oxygen with oxygen concentrations between 18 and 21 mole percent.

(5) The use of proportioning and precision blending devices to obtain the required analyzer gas concentrations is allowable provided their use has been approved in advance by the Administrator.

(b) Calibration gases (not including methanol) shall be traceable to within one percent of NIST (formerly NBS) gas standards, or other gas standards which have been approved by the Administrator.

(c) Span gases (not including methanol) shall be accurate to within two percent of true concentration, where true concentration refers to NIST (formerly NBS) gas standards, or other gas standards which have been approved by the Administrator.

(d) Methanol in air gases used for response factor determination shall:

(1) Be traceable to within ±2 percent of NIST (formerly NBS) gas standards, or other gas standards which have been approved by the Administrator; and

(2) Remain within ±2 percent of the labeled concentration. Demonstration of stability shall be based on a quarterly measurement procedure with a precision of ±2 percent (two standard deviations), or other method approved by the Administrator. The measurement procedure may incorporate multiple measurements. If the true concentration of the gas changes by more

than two percent, but less than ten percent, the gas may be relabeled with the new concentration.

[48 FR 1456, Jan. 12, 1983, as amended at 60 FR 34359, June 30, 1995]

§86.1215–85 EPA heavy-duty vehicle (HDV) urban dynamometer driving schedule.

(a) The EPA dynamometer driving schedule for heavy-duty vehicles is a 1060 second transient speed versus time cycle which is designed to simulate gasoline-fueled HDV operation in urban areas. A second by second listing of this schedule is given in appendix I(d) of this part. Thirty-three percent of the cycle is idle operation, and the average vehicle speed is 18.9 mph (30.4 km/hr). The Administrator will use this driving schedule when conducting evaporative emission tests, as described in §86.1230–96.

(b) The driver should attempt to follow the target schedule as closely as possible. The speed tolerance at any given time for these schedules, or for a driver's aid chart approved by the Administrator, are as follows:

(1) The upper limit is 4 mph (6.4 km/h) higher than the highest point on the trace within 1 second of the given time.

(2) The lower limit is 4 mph (6.4 km/h) lower than the lowest point on the trace within 1 second of the given time.

(3)(i) Speed variations greater than the tolerances (such as may occur during gear changes or braking spikes) are acceptable, provided they occur for less than 2 seconds on any occasion and are clearly documented as to the time and speed at that point of the driving schedule.

(ii) When conducted to meet the requirements of §86.1229, up to three additional occurrences of speed variations greater than the tolerance are acceptable, provided they occur for less than 15 seconds on any occasion, and are clearly documented as to the time and speed at that point of the driving schedule.

(4) Speeds lower than those prescribed are acceptable, provided the vehicle is operated at maximum available power during such occurrences.

[48 FR 1456, Jan. 12, 1983, as amended at 58 FR 16050, Mar. 24, 1993]

§86.1216–90 Calibrations; frequency and overview.

(a) Calibrations shall be performed as specified in §86.1217 through §86.1226.

(b) At least yearly or after any maintenance which could alter background emission levels, enclosure background emission measurements shall be performed.

(c) At least monthly or after any maintenance which could alter calibration, the following calibrations and checks shall be performed:

(1) Calibrate the hydrocarbon analyzer (see §86.1221). Certain analyzers may require more frequent calibration depending on particular equipment and uses.

(2) Calibrate the dynamometer. If the dynamometer receives a weekly performance check (and remains within calibration) the monthly calibration need not be performed (see §86.1218).

(3) Perform a hydrocarbon retention check and calibration on the evaporative emission enclosure (see §86.1217).

(d) At least twice annually or after any maintenance perform a methanol retention check and calibration on the evaporative emission enclosure (see §86.1217).

(e) Calibrate the methanol analyzer as often as required by the manufacturer or as necessary according to good practice.

[54 FR 14564, Apr. 11, 1989, as amended at 60 FR 34359, June 30, 1995]

§86.1217–90 Evaporative emission enclosure calibrations.

The calibration of the evaporative emission enclosure consists of three parts: Initial and periodic determination of enclosure background emissions (hydrocarbons and methanol); initial determination of enclosure internal volume; and periodic hydrocarbon and methanol retention check and calibration. Methanol measurements may be omitted when methanol-fueled vehicles will not be tested in the evaporative enclosure.

(a) *Initial and periodic determination of enclosure background emissions.* Prior to its introduction into service, annually thereafter, and after any repair which can affect the enclosure background emissions, the enclosure shall be checked to determine that it does not

contain materials which will themselves emit hydrocarbons or methanol.[1] Proceed as follows:

(1) Zero and span (calibrate if required) the hydrocarbon analyzer.

(2) Purge the enclosure until a stable background hydrocarbon reading is obtained.

(3) Turn on the mixing blower (if not already on).

(4) Seal enclosure and measure background hydrocarbon concentration, background methanol, temperature, and barometric pressure. These are the initial readings C_{HCi}, C_{CH3OHi}, T_i, and P_{Bi}, for the enclosure background determination.

(5) Allow the enclosure to stand undisturbed without sampling for four hours.

(6) Measure the hydrocarbon and methanol concentration on the same FID. These are the final concentrations, C_{HCf} and C_{CH3OHf}. Also measure final temperature and barometric pressure.

(7) Calculate the mass change of methanol, hydrocarbons, and hydrocarbons plus methanol in the enclosure according to the equations in paragraph (d) of this section. The enclosure background emissions (hydrocarbons plus methanol) shall not be greater than 0.4g for the 4 hours.

(b) *Initial determination of enclosure internal volume.* Prior to its introduction into service the enclosure internal volume shall be determined by the following procedure.

(1) Carefully measure the internal length, width and height of the enclosure, accounting for irregularities (such as braces) and calculate the internal volume.

(2) Perform an enclosure calibration check according to paragraphs (c) (1) through (7) of this section.

(3) If the calculated mass does not agree within ±2 percent of the injected propane mass, then corrective action is required.

(c) *Hydrocarbon and methanol retention check and claibration.* The hydrocarbon and methanol retention check provides a check upon the calculated volume and also measures the leak rate. Prior to its introduction into service and at least monthly thereafter the enclosure leak rate shall be determined as follows:

(1) Zero and span (calibrate if required) the hydrocarbon analyzer.

(2) Purge the enclosure until a stable background hydrocarbon reading is obtained.

(3) Turn on the mixing blower (if not already on).

(4) Seal enclosure and measure background hydrocarbon concentration, background methanol, temperature, and barometric pressure. These are the initial readings C_{HCi}, C_{CH3OHi}, T_i and P_{Bi} for the enclosure calibration.

(5) Inject into the enclosure a known quantity of pure propane (4g is a convenient quantity) and a known quantity of pure methanol (4g is a convenient quantity) in gaseous form; i.e., at a temperature of at least 150–155 °F (65–68 °C). The propane and methanol may be measured by volume flow or by mass measurement. The method used to measure the propane and methanol shall have an accuracy of ±0.5 percent of the measured value. (Less accurate methods may be used with the advanced approval of the Administrator.) The methanol and propane tests do not need to be conducted simultaneously.

(6) After a minimum of 5 minutes of mixing, analyze the enclosure atmosphere for hydrocarbon and methanol content, also record temperature and pressure. These measurements are the final readings for the enclosure calibration as well as the initial readings for the retention check.

(7) To verify the enclosure calibration, calculate the mass of propane and the mass of methanol using the measurements taken in steps (4) and (6). See paragraph (d) of this section. This quantity must be within ±2 percent of that measured in step 5 above. (For 1991–1995 calendar years, the difference may exceed ±2 percent for methanol, provided it does not exceed ±6 percent.)

[1] NOTE: When methanol as well as hydrocarbons are present in the evaporative enclosure, the HFID hydrocarbon concentration measurement includes the partial response of the HFID to methanol plus the hydrocarbons. Determination of the HFID response to methanol, § 86.1221, prior to its being placed in service is required for the determination of hydrocarbons.

(8) Allow the enclosure to remain sealed for a minimum of 4 hours, analyze the enclosure atmosphere for hydrocarbon and methanol content; record temperature and barometric pressure. These are the final readings for the hydrocarbon and methanol retention check.

(9) Calculate, using the equation in paragraph (d) of this section and the readings taken in step (8), the hydrocarbon and methanol mass. It may not differ by more than ±4 percent of the value in step (6). (For 1991–1995 calendar year methanol-fueled vehicles, the difference may exceed ±4 percent for methanol, provided it does not exceed ±6 percent.)

(d) *Calculations.* (1) The calculation of net methanol and hydrocarbon mass change is used to determine enclosure background and leak rate. It is also used to check the enclosure volume measurements. The methanol mass change is calculated from the initial and final methanol samples, temperature and pressure according to the following equation:

$$M_{CH3OH} = V \times \frac{T_{Ef}}{V_{Ef} \times T_{SHEDf}} \left[\left(C_{MS1f} AV_{1f} \right) + \left(C_{MS2f} AV_{2f} \right) \right] - \frac{T_{Ei}}{V_{Ei} \times T_{SHEDi}} \left[\left(C_{MS1i} \times AV_{1i} \right) + \left(C_{MS2i} \times AV_{2i} \right) \right]$$

Where:

(i) M_{CH3OH}=Methanol mass change, μg.

(ii) V=Enclosure volume, ft^3, as measured in paragraph (b)(1) of this section.

(iii) T_E=Temperature of sample withdrawn, °R.

(iv) V_E=Volume of sample withdrawn, ft^3.

(v) P_B=Barometric pressure at time of sampling, in. Hg.

(vi) C_{MS}=GC concentration of test sample.

(vii) AV=Volume of absorbing reagent in impinger.

(viii) i=Initial sample.

(ix) f=Final sample.

(x) 1=First impinger.

(xi) 2=Second impinger.

(2) The hydrocarbon mass change is calculated from the initial and final FID readings of hydrocarbon concentration, methanol concentration with FID response to methanol, temperature, and pressure according to the following equation:

$$M_{HC} = kV \times 10^{-4} \frac{\left(C_{HCf} - rC_{CH3OHf} \right)}{T_f} \times P_{Bf} - \frac{\left(C_{HCi} - rC_{CH3OHi} \right)}{T_i} \times P_{Bi}$$

Where:

(i) M_{HC}=Hydrocarbon mass change, g.

(ii) C_{HC}=FID hydrocarbon concentration as ppm carbon including FID response to methanol in the sample.

(iii) C_{CH3OH}=Methanol concentration as ppm carbon.

$$= \frac{1.501 \times 10^{-3} \times T_e}{P_B \times V_E} \times \left[\left(C_{S1} \times AV_1 \right) + \left(C_{S2} \times AV_2 \right) \right]$$

(iv) V = Enclosure volume, ft^3 (m^3), as measured in paragraph (b)(1) of this section.

(v) r = FID response factor to methanol.

(vi) P_B = Barometric pressure, in. Hg (kPa).

(vii) T = Enclosure ambient temperature, °R(°K).

(viii) i = Indicates initial reading.

(ix) f = Indicates final reading.

(x) (A) k = 3.05

(B) *For SI units,* k = 17.60

NOTE: Hydrocarbon concentration is stated in ppm carbon, that is, ppm propane × 3. Expressions in parentheses are for SI units.

[54 FR 14564, Apr. 11, 1989, as amended at 60 FR 34359, June 30, 1995]

§ 86.1217–96 Evaporative emission enclosure calibrations.

The calibration of evaporative emission enclosures consists of three parts: initial and periodic determination of enclosure background emissions (hydrocarbons and methanol); initial determination of enclosure internal volume; and periodic hydrocarbon and methanol retention check and calibration. Methanol measurements may be omitted if methanol-fueled vehicles will not be tested in the evaporative enclosure. Alternate calibration methods may be used if shown to yield equivalent or superior results, and if approved in advance by the Administrator; specifically, more extreme temperatures may be used for determining calibration without affecting the validity of test results.

(a) *Initial and periodic determination of enclosure background emissions.* Prior to its introduction into service, annually thereafter, and after any repair that can affect the enclosure background emissions, the enclosure shall be checked to determine that it does not contain materials that will themselves emit hydrocarbons or methanol. When methanol as well as hydrocarbons are present in the evaporative enclosure, the HFID hydrocarbon concentration measurement includes the partial response of the HFID to methanol plus the hydrocarbons. Determination of the HFID response to methanol, § 86.1221, prior to its being placed in service is required for the determination of hydrocarbons. Proceed as follows:

(1) Prepare the enclosure. (i) Variable-volume enclosures may be operated in either latched or unlatched volume configuration, as described in paragraph (b)(1) of this section. Ambient temperatures shall be maintained at 96±3 °F throughout the 4-hour period.

(ii) Fixed-volume enclosures may be operated with inlet and outlet flow streams either closed or open; if inlet and outlet flow streams are open, the air flowing into and out of the enclosure must be monitored in accordance with § 86.107–96(a)(1)(ii)(B). Ambient temperatures shall be maintained at 96±3 °F throughout the 4-hour period.

(iii) For running loss enclosures ambient temperatures shall be maintained at 95±3 °F throughout the 4-hour period. For running loss enclosures designed with a vent for makeup air, the enclosure shall be operated with the vent closed.

(2) The enclosure may be sealed and the mixing fan operated for a period of up to 12 hours before the 4-hour background sampling period begins.

(3) Zero and span (calibrate if required) the hydrocarbon analyzer.

(4) Prior to the background determination, purge the enclosure until a stable background hydrocarbon reading is obtained.

(5) Turn on the mixing blower (if not already on).

(6) Seal enclosure and measure background hydrocarbon concentration, background methanol, temperature, and barometric pressure. These are the initial readings C_{HCi}, C_{CH_3OHi}, and P_{Bi}, T_i for the enclosure background determination.

(7) Allow the enclosure to stand undisturbed for four hours.

(8) Measure the hydrocarbon concentration on the same FID and the methanol level. These are the final concentrations, C_{HCf} and C_{CH_3OHf}. Also measure final temperature and barometric pressure.

(9) Calculate the mass change of methanol, hydrocarbons, and hydrocarbons plus methanol in the enclosure according to the equations in paragraph (d) of this section.

(i) *Diurnal enclosures.* The enclosure background emissions (hydrocarbons plus methanol) shall not be greater than 0.05g for the 4 hours.

(ii) *Running loss enclosures.* The enclosure background emissions (hydrocarbons plus methanol) shall not be greater than 0.2 grams for the 4 hours.

(b) *Initial determination of enclosure internal volume.* Prior to its introduction into service the enclosure internal volume shall be determined by the following procedure:

(1) Carefully measure the internal length, width and height of the enclosure, accounting for irregularities (such as braces) and calculate the internal volume. For variable-volume enclosures, latch the enclosure to a fixed volume when the enclosure is held at a constant temperature; this nominal volume shall be repeatable within ±0.5 percent of the reported value.

(2)–(3) [Reserved]

(c) *Hydrocarbon and methanol (organic gas) retention check and calibration.* The hydrocarbon and methanol (if the enclosure is used for methanol-fueled vehicles) retention check provides a check upon the calculated volume and also measures the leak rate. The enclosure leak rate shall be determined prior to its introduction into service, following any modifications or repairs to the enclosure that may affect the integrity of the enclosure, and at least monthly thereafter. If six consecutive monthly retention checks are successfully completed without corrective action, the enclosure leak rate may be determined quarterly thereafter as long as no corrective action is required.

(1) An enclosure to be used for the diurnal emission test (see § 86.1233–96) shall be calibrated according to the following procedure. Calibration for hydrocarbon and methanol may be conducted simultaneously or in sequential test runs.

(i) Zero and span (calibrate if required) the hydrocarbon analyzer.

(ii) Purge the enclosure until a stable background hydrocarbon reading is obtained.

(iii) Turn on the mixing blowers (if not already on).

(iv) [Reserved]

(v) Turn on the ambient temperature control system (if not already on) and adjust it for an initial temperature of 96 °F (36 °C). On variable-volume enclosures, latch the enclosure to the appropriate volume position for the set temperature. On fixed-volume enclosures close the outlet and inlet flow streams.

(vi) When the enclosure stabilizes at 96±3 °F (36±2 °C), seal the enclosure and measure background hydrocarbon concentration, background methanol, temperature, and barometric pressure. These are the initial readings C_{HCi}, C_{CH_3OHi}, T_i, and P_{Bi} for the enclosure calibration.

(vii) Inject into the enclosure 2 to 6 grams of pure methanol at a temperature of at least 150 °F (65 °C) and/or 2 to 6 grams of pure propane. The injected quantity may be measured by volume flow or by mass measurement. The method used to measure the quantity of methanol and propane shall have an accuracy of ±0.2 percent of the measured value (less accurate methods may be used with the advance approval of the Administrator).

(viii) After a minimum of 5 minutes of mixing, analyze the enclosure atmosphere for hydrocarbon and methanol content, also record temperature and pressure. These measurements are the final readings for the enclosure calibration as well as the initial readings for the retention check.

(ix) To verify the enclosure calibration, calculate the mass of propane and the mass of methanol using the measurements taken in paragraphs (c)(1)(vi) and (viii) of this section. See paragraph (d) of this section. This quantity must be within ±2 percent of that measured in paragraph (c)(1)(vii) of this section. (For calendar years through 1995, the difference may exceed ±2 percent for methanol, provided it does not exceed ±6 percent.)

(x) For variable-volume enclosures, unlatch the enclosure from the nominal volume configuration. For fixed-volume enclosures, open the outlet and inlet flow streams.

(xi) Start cycling the ambient temperature from 96 °F to 72 °F and back to 96 °F over a 24-hour period, according to the profile specified in § 86.1233–96 and appendix II of this part, within 15 minutes of sealing the enclosure.

(xii) At the completion of the 24-hour cycling period, analyze the enclosure atmosphere for hydrocarbon and methanol content; determine the net withdrawn methanol (in the case of diurnal emission testing with fixed-volume enclosures); record temperature and barometric pressure. These are the final

readings for the hydrocarbon and methanol retention check. The final hydrocarbon and methanol mass, calculated in paragraph (d) of this section, shall be within 3 percent of that determined in paragraph (c)(1)(viii) of this section. (For calendar years through 1995, the difference may exceed ±3 percent for methanol, provided it does not exceed ±6 percent.)

(2) An enclosure to be used for the running loss test (see § 86.1234–96) shall meet the calibration and retention requirements of § 86.1217–90(c).

(3) Enclosures calibrated according to the procedures specified in either paragraph (c)(1) or (c)(2) of this section may be used for hot soak testing (see § 86.1238).

(4) The Administrator, upon request, may waive the requirement to comply with ±2 percent methanol recovery tolerance, and/or the ±3 percent retention tolerance and instead require compliance with higher tolerances (not to exceed ±6 percent for recoveries and ±8 for retention), provided that:

(i) The Administrator determines that compliance with these specified tolerances is not practically feasible; and

(ii) The manufacturer makes information available to the Administrator which indicates that the calibration tests and their results are consistent with good laboratory practice, and that the results are consistent with the results of calibration testing conducted by the Administrator.

(d) *Calculations.* (1) The calculation of net methanol and hydrocarbon mass change is used to determine enclosure background and leak rate. It is also used to check the enclosure volume measurements. The methanol mass change is calculated from the initial and final methanol samples, the net withdrawn methanol (in the case of diurnal emission testing with fixed-volume enclosures), and initial and final temperature and pressure according to the following equation:

$$M_{CH_3OH} = V_n \times \left[\frac{(C_{MS1f} \times AV_{1f}) + (C_{MS2f} \times AV_{2f})}{V_{E_f}}\right] - \left[\frac{(C_{MS1i} \times AV_{1i}) + (C_{MS2i} \times AV_{2i})}{V_{E_i}}\right] + (M_{CH_3OH,out} - M_{CH_3OH,in})$$

Where:

(i) M_{CH3OH}=Methanol mass change, μg.

(ii) V=Enclosure volume, ft^3, as measured in paragraph (b)(1) of this section.

(iii) [Reserved]

(iv) [Reserved]

(v) V_E=Volume of sample withdrawn, ft^3. Sample volumes must be corrected for differences in temperature to be consistent with determination of V_n, prior to being used in the equation.

(vi) P_B=Barometric pressure at time of sampling, in. Hg.

(vii) C_{MS}=GC concentration of test sample.

(viii) AV=Volume of absorbing reagent in impinger.

(ix) i=Initial sample.

(x) f=Final sample.

(xi) 1=First impinger.

(xii) 2=Second impinger.

(xiii) $M_{CH3OH,out}$=mass of methanol exiting the enclosure, in the case of fixed-volume enclosures for diurnal emission testing, μg.

(xiv) $M_{CH3OH,in}$=mass of methanol entering the enclosure, in the case of fixed-volume enclosures for diurnal emission testing, μg.

(2) The hydrocarbon mass change is calculated from the initial and final FID readings of hydrocarbon concentration, methanol concentration with FID response to methanol, temperature, and pressure according to the following equation:

$$M_{HC} = kV \times 10^{-4} \frac{(C_{HCf} - rC_{CH3OHf})}{T_f} \times P_{BF} - \frac{(C_{HCi} - rC_{CH3OHi})}{T_i} \times PBi$$

Where:

(i) M_{HC}=Hydrocarbon mass change, g.

(ii) C_{HC}=FID hydrocarbon concentration as ppm carbon including FID response to methanol in the sample.

(iii) C_{CH3OH}=Methanol concentration as ppm carbon

$$= \frac{1.501 \times 10^{-3} \times T_e}{P_B \times V_E} \times \left[\left(C_{S1} \times AV_1 \right) + \left(C_{S2} \times AV_2 \right) \right]$$

(iv) V=Enclosure volume ft^3 (m^3), as measured in paragraph (b)(1) of this section.

(v) r=FID response factor to methanol.

(vi) P_B=Barometric pressure, in. Hg. (kPa).

(vii) T=Enclosure ambient temperature, R(K).

(viii) i=Indicates initial reading.

(ix) f=Indicates final reading.

(x)(A) k=3.05.

(B) For SI units, k=17.60.

(xi) $M_{HC,out}$=mass of hydrocarbon exiting the enclosure, in the case of fixed-volume enclosures for diurnal emission testing, g.

(xii) $M_{HC,in}$=mass of hydrocarbon entering the enclosure, in the case of fixed-volume enclosures for diurnal emission testing, g.

(3) For variable-volume enclosures, defined in § 86.1207(a)(1)(i), the following simplified form of the hydrocarbon mass change equation may be used:

$$M_{HC} = \left(\frac{k P_B V_n \times 10^{-4}}{T} \right) \times \left[\left(C_{HC_f} - rC_{CH_3OH_f} \right) - \left(C_{HC_i} - rC_{CH_3OH_i} \right) \right]$$

(e) *Calibration of equipment for point-source testing of running losses.* For the point-source method, the running loss fuel vapor sampling system shall be calibrated as a CVS system, as specified in § 86.119, with the additional specification that the vapor sampling system verification be conducted as follows:

(1) The following ''gravimetric'' technique can be used to verify that the vapor sampling system and analytical instruments can accurately measure a mass of gas that has been injected into the system. If the vapor sampling system will be used only in the testing of petroleum-fueled engines, system verification may be performed using propane. If the vapor sampling system will be used with methanol-fueled vehicles as well as petroleum-fueled vehicles, the system verification performance check must include a methanol check in addition to the propane check. (Verification can also be accomplished by constant flow metering using critical flow orifice devices.)

(i) Obtain a small cylinder that has been charged with pure propane gas. Obtain another small cylinder that has been charged with pure methanol if the system will be used for methanol-fueled vehicle testing. Since this cylinder will be heated to 150–155 °F, care must be taken to ensure that the liquid volume of methanol placed in the cylinder does not exceed approximately one-half of the total volume of the cylinder.

(ii) Determine a reference cylinder weight to the nearest 0.01 grams.

(iii) Operate the vapor sampling system in the normal manner and release a known quantity of pure propane into the most frequently used fuel vapor collector during the sampling period (approximately 5 minutes).

(iv) Continue to operate the vapor sampling system in the normal manner and release a known quantity of pure

methanol into the system during the sampling period (approximately 5 minutes).

(v) The calculations of § 86.1244 are performed in the normal way, except in the case of propane. The density of propane (17.30 g/ft^3/carbon atom (0.6109 kg/m^3/carbon atom)) is used in place of the density of exhaust hydrocarbons. In the case of methanol, the density of 37.71 g/ft^3 (1.332 kg/m^3) is used.

(vi) The gravimetric mass is subtracted from the vapor sampling system measured mass and then divided by the gravimetric mass to determine the percent accuracy of the system.

(vii) The cause for any discrepancy greater than ±2 percent must be found and corrected.

(2) This procedure shall be conducted in the point-source running loss test environment with the collector installed in a vehicle in the normal test configuration. The fuel of the test vehicle shall either be diesel, or it shall be kept under 100 °F (38 °C). Two to six grams of pure propane and two to six grams of pure methanol shall be injected into the collector while the vehicle is operated over one Heavy-Duty Vehicle Urban Dynamometer Driving Schedule, as described in § 86.1215 and appendix I of this part. The propane and methanol injections shall be conducted at the ambient temperature of 95±5 °F (35±3 °C).

[58 FR 16050, Mar. 24, 1993, as amended at 60 FR 34360, June 30, 1995; 60 FR 43900, Aug. 23, 1995]

§ 86.1218–85 Dynamometer calibration.

(a) The dynamometer shall be calibrated at least once each month or performance verified at least once each week and then calibrated as required. The calibration shall consist of the manufacturer's recommended calibration procedure plus a determination of the dynamometer frictional power absorption. If the dynamometer is to be used for driving only the reference (transient) schedule, the frictional power absorption needs to be determined only at 50.0 mph (80.5 km/hr). If the dynamometer is to be used for driving the steady-state cycle, the frictional power absorption needs to be determined through the range of 15 to 50 mph. One method for determining dynamometer frictional power absorption at 50.0 mph (80.5 km/hr) is described below. The same general method can be used at other speeds. Other methods may be used if shown to yield equivalent results. The measured absorbed road power includes the dynamometer friction as well as the power absorbed by the power absorption unit. The dynamometer is driven above the test speed range. The device used to drive the dynamometer is then disengaged from the dynamometer and the roll(s) is (are) allowed to coastdown. The kinetic energy of the system is dissipated by the dynamometer. This method neglects the variations in roll bearing friction due to the drive axle weight of the vehicle. In the case of dynamometers with paired rolls, the inertia and power absorption of the free (rear) roll may be neglected if its inertia is less than 3.0 percent of the total equivalent inertia required for vehicle testing.

(1) Devise a method to determine the speed of the roll(s) to be measured for power absorption. A fifth wheel, revolution pickup, or other suitable means may be used.

(2) Place a vehicle on the dynamometer or devise another method of driving the dynamometer.

(3) If the dynamometer is capable of simulating more than a single inertia mass, engage the inertial flywheel or other inertial simulation system for the most common vehicle mass category for which the dynamometer is used. In addition, other vehicle mass categories may be calibrated, if desired.

(4) Drive the dynamometer up to 50 mph (80.5 km/hr).

(5) Record indicated road power.

(6) Drive the dynamometer up to 60 mph (96.9 km/hr).

(7) Disengage the device used to drive the dynamometer.

(8) Record the time for the dynamometer roll(s) to coastdown from 55.0 mph (88.5 km/hr) to 45.0 mph (72.4 km/hr).

(9) Adjust the power absorption unit to a different level.

(10) Repeat steps (4) to (8) above sufficient times to cover the range of road power used.

(11) Calculate absorbed road power (HP_d). (See paragraph (c) of this section.)

(12) Plot indicated road load power at 50 mph (80.5 km/hr) versus road load power at 50 mph (80.5 km/hr).

(b) The performance check consists of conducting a dynamometer coastdown and comparing the coastdown time to that recorded during the last calibration. If the coastdown times differ by more than 1 second or by 5 percent of the time recorded during the last calibration, whichever is greater, a new calibration is required.

(c) Calculations. The road load power actually absorbed by each roll assembly (or roll-inertia weight assembly) of the dynamometer is calculated from the following equation:

$$HP_d = (½)\ (W/32.2)\ (V_1^2—V_2^2)/550t$$

Where:
HP_d = Power, horsepower (kilowatts)
W = Equivalent inertia, lb (kg)
V_1 = Initial velocity, ft/s (m/s) (55 mph = 88.5 km/h = 80.67 ft/s = 24.58 m/s)
V_2 = Final velocity, ft/s (m/s) (45 mph = 72.4 km/h = 66 ft/s = 20.11 m/s)
t = Elapsed time for rolls to coast from 55 mph to 45 mph (88.5 to 72.4 km/hr).

(Expressions in parenthesis are for SI units). When the coastdown is from 55 to 45 mph (88.5 to 72.4 km/hr) the above equation reduces to:

$$HP_d = 0.06073\ (W/t)$$

For SI units:
$$HP_d = 0.09984\ (W/t)$$

The total road load power actually absorbed by the dynamometer is the sum of the absorbed road load power of each roll assembly.

§86.1221–90 Hydrocarbon analyzer calibration.

The FID hydrocarbon analyzer shall receive the following initial and periodic calibrations.

(a) *Initial and periodic optimization of detector response.* Prior to its introduction into service and at least annually thereafter, the FID hydrocarbon analyzer shall be adjusted for optimum hydrocarbon response. (The HFID used with methanol-fueled vehicles shall be operated at 235° ±15 °F (113° ±8 °C)). Analyzers used with gasoline-fuel and liquefied petroleum gas-fuel shall be optimized using propane. Analyzers used with natural gas-fuel may be optimized using methane, or if calibrated using propane the FID response to methane shall be determined and applied to the FID hydrocarbon reading. Alternate methods yielding equivalent results may be used, if approved in advance by the Administrator.

(1) Follow the manufacturer's instructions or good engineering practice for instrument startup and basic operating adjustment using the appropriate FID fuel and zero-grade air.

(2) Optimize on the most common operating range. Introduce into the analyzer a propane (or methane as appropriate) in air mixture with a propane (or methane as appropriate) concentration equal to approximately 90 percent of the most common operating range.

(3) Select an operating FID fuel flow rate that will give near maximum response and least variation in response with minor fuel flow variations.

(4) To determine the optimum air flow, use the FID fuel flow setting determined above and vary air flow.

(5) After the optimum flow rates have been determined, record them for future reference.

(b) *Initial and periodic calibration.* Prior to its introduction into service and monthly thereafter the FID hydrocarbon analyzer shall be calibrated on all normally used instrument ranges, and, if applicable, the methanol response factor shall be determined (paragraph (c) of this section). Use the same flow rate as when analyzing sample.

(1) Adjust analyzer to optimize performance.

(2) Zero the hydrocarbon analyzer with zero-grade air.

(3) Calibrate on each normally used operating range with propane in air (or methane in air as appropriate) calibration gases having nominal concentrations of 15, 30, 45, 60, 75 and 90 percent of that range. For each range calibrated, if the deviation from a least squares best-fit straight line is two percent or less of the value at each data point, concentration values may be calculated by use of a single calibration factor for that range. If the deviation exceeds two percent at any point, the best-fit non-linear equation which

represents the data to within two percent of each test point shall be used to determine concentration.

(c) *FID response factor to methanol.* When the FID analyzer is to be used for the analysis of hydrocarbon samples containing methanol, the methanol response factor of the analyzer shall be established. The methanol response factor shall be determined at several concentrations in the range of concentrations in the exhaust sample, using either bag samples or gas bottles meeting the requirements of § 86.114.

(1) The bag sample of methanol for analysis in the FID, if used, shall be prepared using the apparatus shown in Figure M90–1. A known volume of methanol is injected, using a microliter syringe, into the heated mixing zone (250 °F (121 °C) of the apparatus. The methanol is vaporized and swept into the sample bag with a known volume of zero grade air measured by a gas flow meter with an accuracy of ±2 percent.

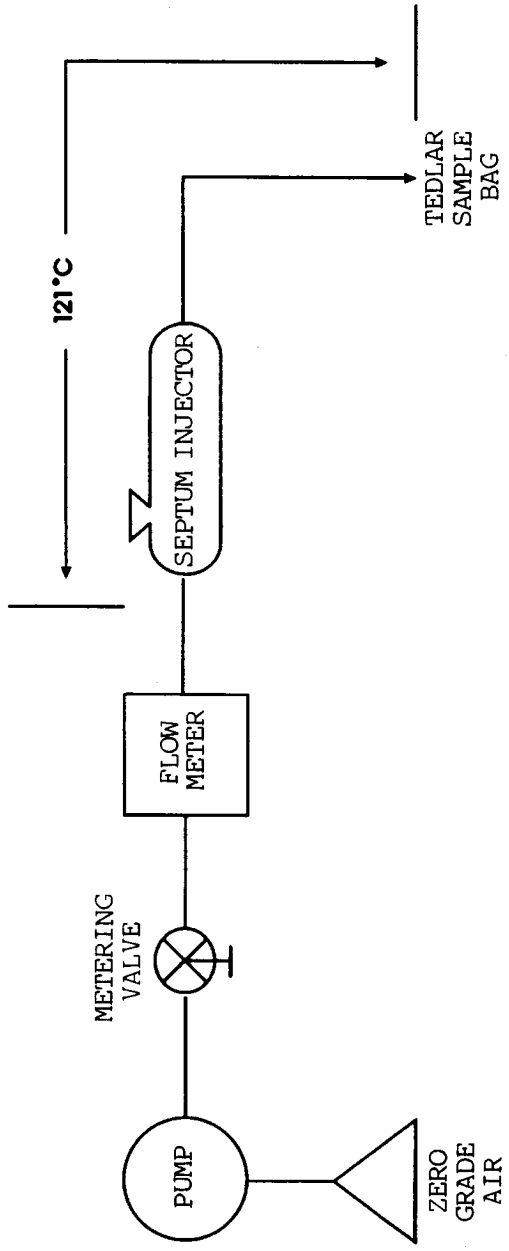

FIGURE M90-1 APPARATUS FOR PREPARATION OF FID METHANOL RESPONSE CALIBRATION MIX

(2) The bag sample is analyzed using the FID.

(3) The FID response factor, r, is calculated as follows:

$$r = FID_{ppm}/SAM_{ppm}$$

Where:

(i) r = FID response factor.

(ii) FID_{ppm} = FID reading in ppmC.

(iii) SAMppm=methanol concentration in the sample bag, or gas bottle, in ppmC. SAMppm for sample bags:

$$= \frac{0.02406 \times \text{Fuel injected} \times \text{Fuel density}}{\text{Air volume} \times \text{Mol. Wt. } CH_3OH}$$

Where:

(iv) 0.02406 = Volume of one mole at 29.92 in Hg and 68 °F, m^3.

(v) Fuel injected = Volume of methanol injected, ml.

(vi) Fuel density = Density of methanol, 0.7914 g/ml.

(vii) Air volume = Volume of zero grade air, m^3.

(viii) Mol. Wt. CH_3OH = 32.04.

(d) The gas chromatograph used in the analysis of methanol samples shall be calibrated at least monthly following manufacturers' recommended procedures (certain equipment may require more frequent calibration based on use and good engineering judgment).

(e) *FID response factor to methane.* When the FID analyzer to be used for the analysis of natural gas-fueled vehicle hydrocarbon samples has been calibrated using propane, the methane response factor of the analyzer shall be established. To determine the total hydrocarbon FID response to methane, known methane in air concentrations traceable to National Institute of Standards and Technology (NIST) shall be analyzed by the FID. Several methane concentrations shall be analyzed by the FID in the range of concentrations in the exhaust sample. The total hydrocarbon FID response to methane is calculated as follows:

r_{CH4} = FIDppm/SAMppm

Where:

(1) r_{CH4} = FID response factor to methane.

(2) FIDppm = FID reading in ppmC.

(3) SAMppm = the known methane concentration in ppmC.

[54 FR 14566, Apr. 11, 1989, as amended at 59 FR 48523, Sept. 21, 1994; 60 FR 34361, June 30, 1995]

§ 86.1226–85 Calibration of other equipment.

Other test equipment used for testing shall be calibrated as often as required by the manufacturer or as necessary according to good practice.

§ 86.1227–90 Test procedures; overview.

(a) The overall test consists of prescribed sequences of fueling, parking, and operating conditions. Vehicles are tested only for evaporative emissions.

(b) The evaporative emission test (gasoline-fueled and methanol-fueled vehicles) is designed to determine hydrocarbon and/or methanol evaporative emissions as a consequence of diurnal temperature fluctuation, urban driving and hot soaks during engine-off periods. It is associated with a series of events representative of heavy-duty vehicle operation, which result in hydrocarbon and/or methanol vapor losses. The test procedure is designed to measure:

(1) Diurnal breathing losses resulting from daily temperature changes, measured by the enclosure technique;

(2) Running losses from suspected sources (if indicated by engineering analysis or vehicle inspection) resulting from a simulated trip on a chassis dynamometer, measured by carbon traps; and

(3) Hot soak losses which result when the vehicle is parked and the hot engine is turned off, measured by the enclosure technique.

(c) Background concentrations are measured for all species for which emissions measurements are made. For evaporative testing, this requires measuring initial concentrations. (When testing methanol-fueled vehicles, manufacturers may choose not to measure background concentrations of methanol, and then assume that the concentrations are zero during calculations.)

[54 FR 14568, Apr. 11, 1989, as amended at 60 FR 34363, June 30, 1995]

§ 86.1227–96 Test procedures; overview.

(a) The overall test consists of prescribed sequences of fueling, parking, and operating conditions. Vehicles are tested only for evaporative emissions.

(b) The evaporative emission test (gasoline-fueled, natural gas-fueled, liquefied petroleum gas-fueled, and methanol-fueled vehicles) is designed

to determine hydrocarbon and/or methanol evaporative emissions as a consequence of diurnal temperature fluctuation urban driving and hot soaks during engine-off periods. It is associated with a series of events representative of heavy-duty vehicle operation, which result in hydrocarbon and/or methanol vapor losses. The test procedure is designed to measure:

(1) Diurnal emissions resulting from daily temperature changes (as well as relatively constant resting losses), measured by the enclosure technique (see §86.1233);

(2) Running losses resulting from a simulated trip on a chassis dynamometer, measured by the enclosure or point-source technique (see §86.1234; this test is not required for gaseous-fueled vehicles); and

(3) Hot soak losses, which result when the vehicle is parked and the hot engine is turned off, measured by the enclosure technique (see §86.1238).

(c) Background concentrations are measured for all species for which emissions measurements are made. For evaporative testing, this requires measuring initial concentrations. (When testing methanol-fueled vehicles, manufacturers may choose not to measure background concentrations of methanol, and then assume that the concentrations are zero during calculations.)

[58 FR 16052, Mar. 24, 1993, as amended at 59 FR 48523, Sept. 21, 1994; 60 FR 34363, June 30, 1995]

§86.1228–85 Transmissions.

(a) All test conditions, except as noted, shall be run in a manner representative of in-use operation, and where appropriate, according to the manufacturer's recommendation to the ultimate purchaser.

(b) Except for the first idle mode, idle modes less than one minute in length shall be run with automatic transmissions in ''Drive'' and the wheels braked; manual transmissions shall be in gear with the clutch disengaged, except first idle. The first idle mode and idle modes longer than one minute in length shall be run with automatic transmissions in ''Neutral,'' and manual transmissions shall be in ''Neutral'' with the clutch engaged (clutch may be disengaged for engine start-up).

(c) The vehicle shall be driven with minimum accelerator pedal movement to maintain the desired operation.

(d) Accelerations shall be driven smoothly according to the manufacturer's recommendation to the ultimate purchaser. For manual transmissions, the operator shall accomplish each shift with minimum time. If the vehicle cannot accelerate at the specified rate, the vehicle shall be operated at maximum available power until the vehicle speed reaches the value prescribed for that time in the driving schedule.

(e) For those deceleration modes which decelerate to zero, manual transmission clutches shall be depressed when the speed drops below 15 mph (24.1 km/hr), when engine roughness is evident, or when engine stalling is imminent.

§86.1229–85 Dynamometer load determination and fuel temperature profile.

(a) Flywheels, electrical or other means of simulating inertia shall be used. The value of equivalent inertia weight shall be within 250 pounds of the loaded vehicle weight (LVW). Loaded vehicle weight is defined as follows:

(1) For test vehicles which have an actual weight less than $0.5 \times$(GVWR),

$$LVW = 0.5 \times (\text{Gross Vehicle Weight Rating})$$

(2) For test vehicles which have an actual weight (As tested) greater than $0.5 \times$(GVWR),

$$LVW = \text{Actual Weight of Test Vehicle},$$

(b) *Power absorption unit adjustment.* (1) The power absorption unit shall be adjusted to reproduce road load power at 50 mph true speed. The indicated road load power setting shall take into account the dynamometer friction. The relationship between road load (absorbed) power and indicated road load power for a particular dynamometer shall be determined by the procedure outlined in §86.1218–85 or other suitable means.

(2) The road load power used shall be determined from the following equation:

$$RLP = 0.67(H - 0.75)W + 0.00125[LVW - (N \times DW)]$$

Where:

RLP = Road Load Power at 50 mph (horsepower).

H = Vehicle overall maximum height (feet).

W = Vehicle overall maximum width (feet).

LVW = Loaded vehicle weight (pounds).

DW = Vehicle weight supported by the dynamometer (pounds).

N = Number of dynamometer rolls supporting a tire.

or the manufacturer may determine the road load power by an alternate procedure (including coastdown). Such alternate procedures shall exhibit good engineering judgement and shall be subject to review upon request by the Administrator. For vehicles which the manufacturer chooses to certify by the optional light-duty truck certification provision (§ 86.082–1(b)), the evaporative emission test procedure (and standard) will be that specified by the light-duty truck regulations.

(c) [Reserved]

(d) *Fuel temperature profile*—(1) *General requirements.* (i) To be tested for running losses, as specified in § 86.1234, a vehicle must have a fuel temperature profile. The following procedure is used to generate the fuel temperature profile, which serves as a target for controlling fuel temperatures during the running loss test. This profile represents the fuel temperature change that occurs during on-road driving. If a vehicle has more than one fuel tank, a profile shall be established for each tank. Manufacturers may also simultaneously generate a profile for vapor temperatures.

(ii) If a manufacturer uses a vehicle model to develop a profile to represent multiple models, the vehicle model selected must have the greatest expected fuel temperature increase during driving of all those models it represents. Also, manufacturers must select test vehicles with any available vehicle options that increase fuel temperatures during driving (for example, any feature that limits underbody airflow).

(iii) Manufacturers may conduct testing to develop fuel temperature profiles in a laboratory setting, subject to approval by the Administrator. The laboratory facility should simulate outdoor testing to reproduce fuel and vapor temperature behavior over the specified driving schedule. The design of the laboratory facility should include consideration of any parameters that may affect fuel temperatures, such as solar loading, pavement heat, and relative wind velocities around and underneath the test vehicle. Indoor testing to develop the fuel temperature profiles must be conducted with little or no vehicle-specific adjustment of laboratory parameters. Manufacturers would need to maintain an ongoing demonstration of correlation between laboratory and outdoor measurement of fuel temperatures. Specifically, fuel temperatures and pressures from indoor driving should be at least as high as measured when driving outdoors according to the procedures described in this section.

(iv) Small-volume manufacturers, as defined in § 86.094–14(b)(1), may use an alternate method for generating fuel temperature profiles, subject to the approval of the Administrator.

(v) The Administrator may conduct testing to establish any vehicle's temperature profiles or to verify compliance with fuel tank pressure requirements.

(2) *Vehicle instrumentation.* (i) The vehicle must be equipped with temperature sensors and pressure transducers, as described in § 86.1207–96(e) and (f), and a driver's aid, which shall be configured to provide the test driver with the desired vehicle speed vs. time trace and the actual vehicle speed.

(ii) A computer, data logger, or strip chart data recorder shall record the following parameters at a minimum during the test run:

(A) Desired speed;

(B) Actual speed;

(C) Instantaneous average liquid fuel temperature (T_{liq}); and

(D) Vapor space pressure (the Administrator may omit measurement of fuel tank pressure).

(iii) The data recording system described in paragraph (d)(2)(ii) of this section shall be capable of resolving time to ±1 s, capable of resolving temperature to ±2 °F, capable of resolving pressure to ±1.0 inch of water, and capable of resolving speed to ±1 mph. The temperature and pressure signals shall be recorded at intervals of up to 1

minute; speed signals shall be recorded at intervals of up to 1 second.

(3) *Ambient conditions.* The procedure shall be run under the following ambient conditions. Conditions should be representative of sunny summer days.

(i) Starting ambient temperature ($T_{amb,o}$) shall be at least 95 °F, steady or increasing (no more than 2 °F drop) during the procedure. Ambient temperature shall be measured and recorded in regular intervals of at least once every 5 minutes. Measure ambient temperature with the following requirements (based on Federal Standard for Siting Meteorological Sensors at Airports, FCM–S4–1987). The sensors shall be mounted 5±1 feet (1.5±0.3 meters) above ground level. The sensors shall be protected from radiation from the sun, sky, earth, and any other surrounding objects, but at the same time be adequately ventilated. The sensors shall be installed in such a position as to ensure that measurements are representative of the free air circulation in the locality and not influenced by artificial conditions such as large buildings, cooling towers, and expanses of concrete and tarmac. Keep any grass and vegetation within 100 feet (30 meters) of the sensor clipped to a height of about 10 inches (25 centimeters) or less.

(ii) Wind conditions shall be calm to light with maximum wind speed of 15 mph. In the case of temporary gusting, wind speeds between 15 and 25 mph may occur for up to 5 percent of the total driving time without invalidating the data collection. Wind speed shall be measured and recorded in regular intervals of at least once per minute. Measure wind speed with the following requirements (based on *Federal Standard for Siting Meteorological Sensors at Airports*, FCM–S4–1987). The site should be relatively level, but small gradual slopes are acceptable. The sensor shall be mounted 30 to 33 feet (9 to 10 meters) above the average ground height within a radius of 500 feet (150 meters). The sensor height shall not exceed 33 feet, except as necessary to be at least 15 feet (5 meters) above the height of any obstruction (e.g. vegetation, buildings, etc.) within a 500 foot (150 meter) radius. An object is considered to be an obstruction if the included lateral angle from the sensor to the ends of the object is 10 degrees or more.

(iii) Road surface temperature shall be at least 125 °F throughout the driving period. Pavement temperature shall be measured and recorded in regular intervals of at least once per minute. The track temperature may be measured with an embedded sensor, a portable temperature probe, or an infrared pyrometer that can provide an accuracy of ±2 °F. Temperatures must be measured on a surface representative of the surface where the vehicle is driven.

(iv) Conditions shall be sunny or mostly sunny with a maximum cloud cover of 25 percent.

(v) Reported cloud cover, wind speed, and ambient temperature should be consistent with that reported by the nearest weather station; the Administrator may request justification of any discrepancy.

(4) *Profile determination procedure.* (i) Drain the fuel tank(s) and fill with test fuel to the ''tank fuel volume'' defined in § 86.082–2. The test fuel should meet the specifications of § 86.1213, except that fuel with a lower volatility may be used, subject to Administrator approval. Manufacturers using a lower volatility fuel must generate a vapor temperature profile for demonstrating compliance with the limit on fuel tank pressure during the running loss test (see § 86.1234–96).

(ii) The vehicle shall be moved to the location where the data is to be collected. It may be driven a maximum distance of 5 miles and may also be transported by other means. The vehicle shall be stabilized by one of the following methods:

(A) The vehicle shall be parked for a minimum of 12 hours in an open area on a surface that is representative of the test road, without any artificial heating or cooling of the fuel. The orientation of the front of the vehicle during parking (e.g., N, SW, etc.) shall be documented.

(B) The vehicle may be soaked in a temperature-controlled environment to stabilize fuel temperatures. Before starting the drive, the vehicle shall be stabilized with fuel temperatures 95±3 °F for at least one hour. The fuel temperature may not exceed 98 °F at any

time before the beginning of the driving schedule, during which only whole-vehicle heating and cooling may be used to control fuel temperatures. If a manufacturer uses the provisions of paragraph (d)(7)(v) of this section to establish a lower initial fuel temperature for the running loss test, the fuel in the test vehicle may not be stabilized at a temperature higher than the newly established initial fuel temperature.

(iii) Once the ambient conditions specified in paragraph (d)(3) of this section are met and the vehicle has been stabilized according to paragraph (d)(4)(ii) of this section, the vehicle's engine may be started. The vehicle's air conditioning system (if so equipped) shall be set to the ''normal'' air conditioning mode and adjusted to the minimum discharge air temperature and high fan speed. Vehicles equipped with automatic temperature controlled air conditioning systems shall be set to operate in ''automatic'' temperature and fan modes with the system set at 72 °F.

(iv) The vehicle may be operated at minimum throttle for a period up to 60 seconds prior to the start of the driving schedule, as necessary to move from the parking location onto the road surface. The driver's aid shall be started and the vehicle operated over the driving cycle specified in § 86.1234–96(b) with the transmission operated in the same manner as specified in § 86.128–79. The data recording system shall provide a record of the required parameters over the entire period of driving.

(5) *Records required.* In addition to the vehicle data recording, the following parameters shall be documented for the determination of the fuel temperature profile:

(i) Date and time of vehicle fueling;

(ii) Odometer reading at vehicle fueling;

(iii) Date and time vehicle was parked, parking location and orientation;

(iv) Odometer reading at parking;

(v) Date and time engine was started;

(vi) Time of initiation of first Heavy-Duty Vehicle UDDS;

(vii) Time of completion of the driving cycle;

(viii) Ambient temperatures throughout the period of driving (T_{amb});

(ix) Wind speed throughout the period of driving;

(x) Track surface temperatures throughout the period of driving cycle (T_{sur});

(xi) Percent cloud cover during the period of driving; and

(xii) Ambient temperature, wind speed, and percent cloud cover reported by the nearest weather station for the time corresponding most closely to the period of driving.

(6) *Fuel tank pressure.* Tank pressure shall not exceed 10 inches of water at any time during the temperature profile determination unless a pressurized system is used and the manufacturer demonstrates that vapor would not be vented to the atmosphere upon fuel cap removal.

(7) *Calculation of temperature profiles.* (i) The traces from the driving schedule shall be verified to meet the speed tolerance requirements of § 86.1215. The following conditions shall be verified:

(A) $T_{amb,i} \geq T_{amb,o} - 2$ °F.

Where,

(*1*) i=instantaneous measurement throughout the drive; and

(*2*) o=initial measurement at the start of the specified driving schedule.

(B) $T_{amb,o} \geq 95$ °F.

(C) $T_{sur,i} - T_{amb,i} \geq 30$ °F.

(D) $W_{max} \leq 15$ mph.

(ii) Failure to comply with any of these requirements shall result in invalidation of the data and require that the procedure be repeated, beginning with the fuel drain at paragraph (d)(4)(i) of this section.

(iii) If all these requirements are met, the following calculations shall be performed to determine a profile for liquid fuel temperatures and, if applicable, for vapor temperatures: $T_{i,profile} = T_i - T_o$.

Where:

(A) $T_{i,profile}$=the series of temperatures that comprise the relative temperature profile.

(B) T_i=the series of observed liquid fuel or vapor temperatures during the drive.

(C) T_o=the liquid fuel or vapor temperature observed at the start of the specified driving schedule.

(iv) The relative temperature profile consists of the set of temperatures at

each 1-minute interval. If temperatures are sampled more frequently than once per minute, the temperature data points may represent a rolling average of temperatures sampled for up to one-minute intervals. If multiple valid test runs are conducted for any model, then all the collected data shall be used to calculate a composite profile, based on the average temperatures at each point. The absolute temperature profile is determined by adding 95 °F (35 °C) to each point of the relative profile. Other methodologies for developing corrected liquid fuel and vapor space temperature profiles may be used if demonstrated to yield equivalent results and approved in advance by the Administrator.

(v) Manufacturers may use a lower initial fuel temperature for the running loss test, if approved in advance by the Administrator. To demonstrate the need for such an adjustment, manufacturers would be expected to determine the maximum fuel temperature experienced by a vehicle during an extended park or after driving one UDDS cycle when exposed to the ambient conditions described in paragraph (d)(3) of this section. To use this provision, manufacturers would have to show maximum fuel temperatures no greater than 92 °F.

[48 FR 1456, Jan. 12, 1983, as amended at 48 FR 52210, Nov. 16, 1983; 58 FR 16053, Mar. 24, 1993; 60 FR 43901, Aug. 23, 1995]

§86.1230–85 Test sequence; general requirements.

The test sequence shown in Figure M85–1 show the steps encountered as the test vehicle undergoes the test procedure. Ambient temperature levels encountered by the test vehicle throughout the test sequence shall not be less than 68° F (20° C) nor more than 86° F (30° C). The vehicle shall be approximately level during all phases of the test sequence to prevent abnormal fuel distribution.

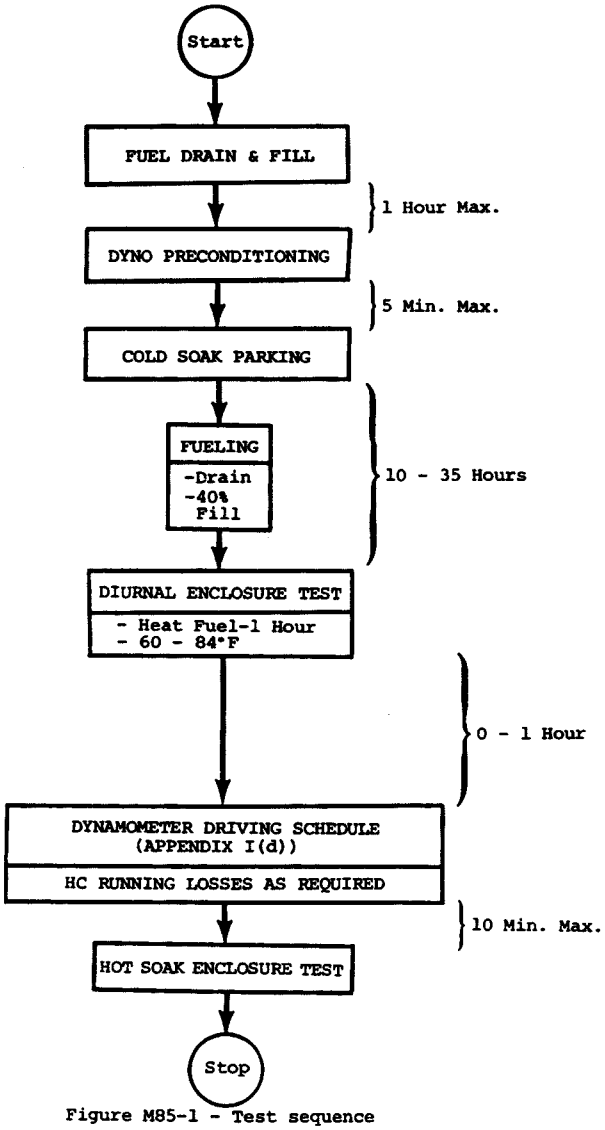

Figure M85-1 - Test sequence

[48 FR 1456, Jan. 12, 1983, as amended at 48 FR 52210, Nov. 16, 1983]

§ 86.1230–96 Test sequence; general requirements.

(a)(1) *Gasoline- and methanol-fueled vehicles.* The test sequence shown in figure M96–1 of this section shows the steps encountered as the test vehicle undergoes the procedures subsequently described to determine conformity with the standards set forth. The full three-diurnal sequence depicted in figure M96–1 tests vehicles for all sources

of evaporative emissions. The supplemental two-diurnal test sequence is designed to verify that vehicles sufficiently purge their evaporative canisters during the dynamometer run. Sections 86.1232–96, 86.1233–96 and 86.1238–96 describe the separate specifications of the supplemental two-diurnal test sequence.

(2) *Gaseous-fueled vehicles.* The test sequence shown in figure M96–1 of this section shows the steps encountered as the test vehicle undergoes the procedures subsequently described to determine conformity with the standards set forth, with the exception that the fuel drain and fill and precondition canister steps are not required for gaseous-fueled vehicles. In addition, the supplemental two-diurnal test and the running loss test are not required.

(b) The vehicle test for fuel spitback during fuel dispensing is conducted as a stand-alone test (see § 86.1246). This test is not required for gaseous-fueled vehicles.

(c) Ambient temperature levels encountered by the test vehicle shall be not less than 68 °F nor more than 86 °F, unless otherwise specified. If a different ambient temperature is specified for soaking the vehicle, the soak period may be interrupted once for up to 10 minutes to transport the vehicle from one soak area to another, provided the ambient temperature experienced by the vehicle is never below 68 °F. The temperatures monitored during testing must be representative of those experienced by the test vehicle.

(d) The vehicle shall be approximately level during all phases of the test sequence to prevent abnormal fuel distribution.

(e) If tests are invalidated after collection of emission data from previous test segments, the test may be repeated to collect only those data points needed to complete emission measurements. Compliance with emission standards may be determined by combining emission measurements from different test runs. If any emission measurements are repeated, the new measurements supersede previous values.

Federal Test Procedure

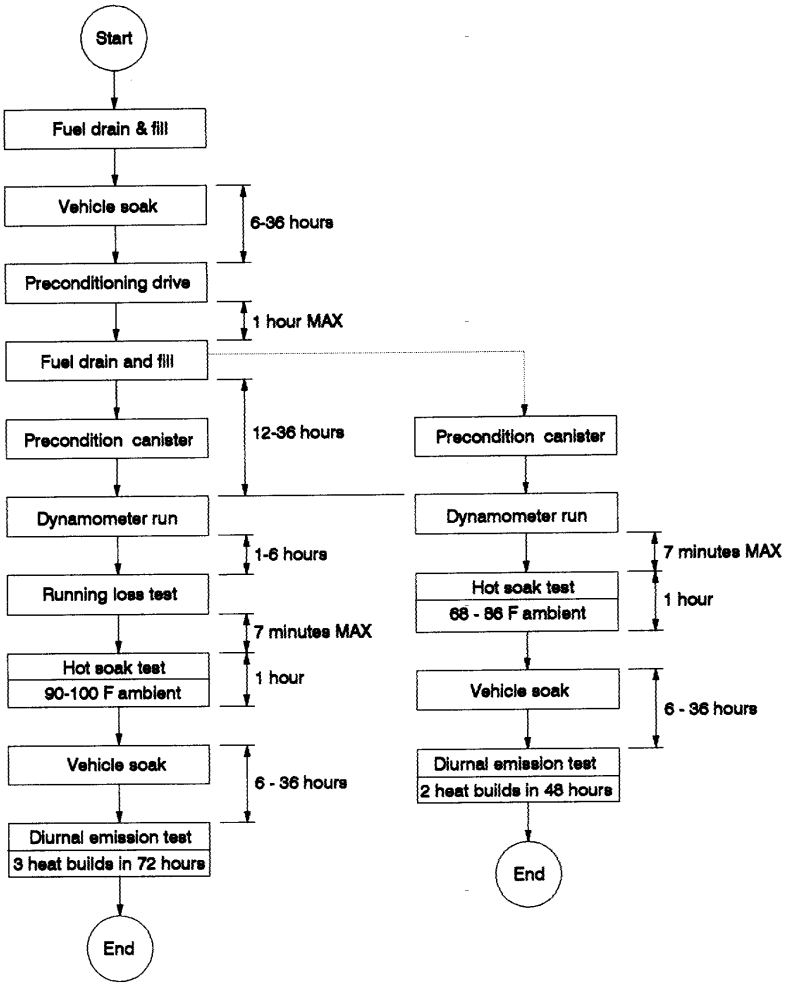

Figure M96-1 Test sequence

[58 FR 16054, Mar. 24, 1993, as amended at 59 FR 48524, Sept. 21, 1994; 60 FR 43902, Aug. 23, 1995]

§86.1231–90 Vehicle preparation.

(a) Prepare the fuel tank(s) for recording the temperature of the prescribed test fuel at the approximate mid-volume of the fuel when the tank is 40 percent full.

(b) Provide additional fittings and adapters, as required, to accommodate a fuel drain at the lowest point possible in the tank(s) as installed on the vehicle.

(c)(1) Any vapor storage device which absorbs HC vapors and/or CH_3OH vapors and subsequently releases them to the engine induction system during vehicle operation shall be subjected to a minimum of 30 load-purge cycles or the equivalent thereof (4,000 miles or more of actual in-use vehicle service accumulation shall be considered equivalent). One load-purge cycle shall be accomplished by conducting one of the following procedures:

(i) *Vehicle Procedure.* Park a fully-warm vehicle (a vehicle that has been driven for at least 15 minutes) for a time period of at least 3 hours. Fill the fuel tank(s) to the prescribed ''tank fuel volume'' with specified test fuel (§86.1213) at room temperature. Then drive the vehicle through at least one cycle of the HDV reference (transient) urban dynamometer driving schedule.

(ii) *Laboratory Procedure.* Flow vapors (gasoline or methanol, as appropriate) into a pre-purged vapor storage device until at least 10 percent of the input HC or CH_3OH mass flow rate is passing through the device. Purge the device with a volume of air which is at least as great as, and which has a temperature no higher than that which would be drawn through the device if it were installed on the test vehicle and the vehicle was operated according to the HDV reference (transient) urban dynamometer driving schedule. The vapor flow rate, the method used to generate the vapors, the air flow rate, and the air temperature shall be recorded. If pre-blended gas is used, then the composition and characteristics of the gas shall be recorded.

(2) Ten load-purge cycles accumulated immediately prior to testing shall be conducted according to the method in paragraph (c)(1)(i) of this section. The preceding 20 cycles (minimum) shall be conducted according to either of the methods in paragraph (c)(1) (i) or (ii) of this section.

[54 FR 14568, Apr. 11, 1989]

§86.1231–96 Vehicle preparation.

(a) For gasoline- and methanol-fueled vehicles prepare the fuel tank(s) for recording the temperature of the prescribed test fuel, as described in §86.1207–96(e).

(b) Provide additional fittings and adapters, as required, to accommodate a fuel drain at the lowest point possible in the tank(s) as installed on the vehicle.

(c) For preconditioning that involves loading the evaporative emission canister(s) with butane, provide valving or other means as necessary to allow purging and loading of the canister(s).

(d) For vehicles to be tested for running loss emissions, prepare the fuel tank(s) for measuring and recording the temperature and pressure of the fuel tank as specified in §86.1207–96 (e) and (f). Measurement of vapor temperature is optional during the running loss test. If vapor temperature is not measured, fuel tank pressure need not be measured.

(e) For vehicles to be tested for running loss emissions, prepare the exhaust system by sealing or plugging all detectable sources of exhaust gas leaks. The exhaust system shall be tested or inspected to ensure that detectable exhaust hydrocarbons are not emitted into the running loss enclosure during the running loss test.

[58 FR 16056, Mar. 24, 1993, as amended at 60 FR 43904, Aug. 23, 1995]

§86.1232–90 Vehicle preconditioning.

(a) The vehicle shall be moved to the test area and the following operations performed:

(1) The fuel tank(s) shall be drained through the provided fuel tank(s) drain(s) and filled to the prescribed ''tank fuel volume'' with the specified test fuel, §86.1213. For the above operations the evaporative emission control system shall neither be abnormally purged nor abnormally loaded.

(2) Within one hour of being fueled the vehicle shall be placed, either by being driven or pushed, on a dynamometer and operated through one HDV

urban dynamometer driving schedule (see § 86.1215). A test vehicle may not be used to set dynamometer horsepower.

(3) The Administrator may choose to conduct additional preconditioning to insure that the evaporative emissions control system is stabilized. The additional preconditioning shall consist of an initial one hour minimum soak and one, two or three driving cycles of the dynamometer driving schedule, as described in paragraph (a)(2) of this section, each followed by a soak of at least one hour with engine off, engine compartment cover closed and cooling fan off. The vehicle may be driven off the dynamometer for the soak period which follows each driving cycle.

(b) After completion of preconditioning the vehicle shall be driven off the dynamometer and parked. The engine shall be turned off within five minutes of completion of preconditioning. The vehicle may be pushed to its parking location after its engine has been turned off.

[54 FR 14568, Apr. 11, 1989]

§ 86.1232–96 Vehicle preconditioning.

(a) Fuel tank cap(s) of gasoline- and methanol-fueled vehicles shall be removed during any period that the vehicle is parked outdoors awaiting testing, to prevent unusual loading of the canisters. During this time care must be taken to prevent entry of water or other contaminants into the fuel tank. During storage in the test area while awaiting testing, the fuel tank cap(s) may be in place. The vehicle shall be moved into the test area and the following operations performed.

(b)(1) *Gasoline- and methanol-fueled vehicles.* Drain the fuel tank(s) and fill with test fuel, as specified in § 86.1213, to the ''tank fuel volume'' defined in § 86.082–2. The fuel cap(s) shall be installed within one minute after refueling.

(2) *Gaseous-fueled vehicles.* Vehicle fuel tanks are to be filled with fuel that meets the specifications in § 86.113. Fuel tanks shall be filled to a minimum of 75% of service pressure for natural gas-fueled vehicles or a minimum of 75% of available fill volume for liquefied petroleum gas-fueled vehicles. Prior draining of the fuel tanks is not called for if the fuel in the tanks already meets the specifications in § 86.113.

(c) Gasoline- and methanol-fueled vehicles shall be soaked for at least 6 hours after being refueled. Gaseous-fueled vehicles shall be soaked for at least 1 hour after being refueled. Following this soak period, the test vehicle shall be placed, either by being driven or pushed, on a dynamometer and operated through one Heavy-Duty Vehicle Urban Dynamometer Driving schedule, specified in § 86.1215 and appendix I of this part. Once a test vehicle has completed the refueling and vehicle soak steps specified in paragraphs (b) and (c) of this section, these steps may be omitted in subsequent testing with the same vehicle and the same fuel specifications, provided the vehicle remains under laboratory ambient temperature conditions for at least 6 hours before starting the next test. In such cases, each subsequent test shall begin with the preconditioning drive specified in this paragraph. The test vehicle may not be used to set dynamometer horsepower.

(d) [Reserved]

(e) The Administrator may choose to conduct additional preconditioning to ensure that the evaporative emissions control system is stabilized. The additional preconditioning shall consist of an initial one hour minimum soak and one, two or three driving cycles of the dynamometer driving schedule, as described in paragraph (c) of this section, each followed by a soak of at least one hour with engine off, engine compartment cover closed and cooling fan off. The vehicle may be driven off the dynamometer for the soak period that follows each driving cycle.

(f)(1) *Gasoline- and methanol-fueled vehicles.* After completion of the preconditioning drive, the vehicle shall be driven off the dynamometer. The vehicle's fuel tank(s) shall be drained and then filled with test fuel, as specified in § 86.1213, to the ''tank fuel volume'' defined in § 86.082–2. The vehicle shall be refueled within 1 hour after completion of the preconditioning drive. The fuel cap(s) shall be installed within 1 minute after refueling. The vehicle shall be parked within five minutes after refueling.

(2) *Gaseous-fueled vehicles.* After completion of the preconditioning drive, the vehicle shall be driven off the dynamometer. Vehicle fuel tanks shall be refilled with fuel that meets the specifications in § 86.1213. Fuel tanks shall be filled to a minimum of 75% of service pressure for natural gas-fueled vehicles or a minimum of 75% of available fill volume for liquefied petroleum gas-fueled vehicles. Prior draining of the fuel tanks is not called for if the fuel in the tanks already meets the specifications in § 86.1213. The vehicle shall be parked within five minutes after refueling, or, in the absence of refueling, within five minutes after completion of the preconditioning drive.

(g) The vehicle shall be soaked for not less than 12 hours nor more than 36 hours between the end of the refueling event and the beginning of the cold start exhaust emission test.

(h) During the soak period for the three-diurnal test sequence described in § 86.1230–96, evaporative canisters, if the vehicle is so equipped, shall be preconditioned according to the following procedure. For vehicles with multiple canisters in a series configuration, the set of canisters must be preconditioned as a unit. For vehicles with multiple canisters in a parallel configuration, each canister must be preconditioned separately. If production evaporative canisters are equipped with a functional service port designed for vapor load or purge steps, the service port shall be used during testing to precondition the canister. In addition, for model year 1998 and later vehicles equipped with refueling canisters, these canisters shall be preconditioned for the three-diurnal test sequence according to the procedure in paragraph (j)(1) of this section. If a vehicle is designed to actively control evaporative or refueling emissions without a canister, the manufacturer shall devise an appropriate preconditioning procedure, subject to the approval of the Administrator.

(1)(i) Prepare the evaporative emission canister for the canister purging and loading operation. The canister shall not be removed from the vehicle, unless access to the canister in its normal location is so restricted that purging and loading can only reasonably be accomplished by removing the canister from the vehicle. Special care shall be taken during this step to avoid damage to the components and the integrity of the fuel system. A replacement canister may be temporarily installed during the soak period while the canister from the test vehicle is preconditioned.

(ii) The canister purge shall be performed with ambient air of humidity controlled to 50±25 grains per pound of dry air. This may be accomplished by purging the canister in a room that is conditioned to this level of absolute humidity. The flow rate of the purge air shall be maintained at a nominal flow rate of 0.8 cfm and the duration shall be determined to provide a total purge volume flow through the canister equivalent to 300 canister bed volume exchanges. The bed volume is based on the volume of adsorbing material in the canister.

(iii) The evaporative emission canister shall then be loaded by sending to the canister an amount of commercial grade butane vapors equivalent to 1.5 times its nominal working capacity. The canister shall be loaded with a mixture composed of 50 percent butane and 50 percent nitrogen by volume at a rate of 15±2 grams butane per hour. If the canister loading at that rate takes longer than 12 hours, a manufacturer may determine a new rate, based on completing the canister loading in no less than 12 hours. The new rate may be used for all subsequent canister loading according to paragraph (h) of this section. The time of initiation and completion of the canister loading shall be recorded.

(iv) The determination of a canister's nominal working capacity shall be based on the average capacity of no less than five canisters that are in a stabilized condition.

(A) For stabilization, each canister must be loaded no less than 10 times and no more than 100 times to 2-gram breakthrough with a 50/50 mixture by volume of butane and nitrogen, at a rate of 15 grams butane per hour. Each canister loading step must be preceded by canister purging with 300 canister bed volume exchanges at 0.8 cfm.

(B) For determining working capacity, each canister must first be purged with 300 canister bed volume exchanges

at 0.8 cfm. The working capacity of each canister shall be established by determining the mass of butane required to load the canister from the purged state so that it emits 2 grams of hydrocarbon vapor; the canister must be loaded with a 50/50 mixture by volume of butane and nitrogen, at a rate of 15 grams butane per hour.

(2) For methanol-fueled and flexible-fueled vehicles, canister preconditioning shall be performed with a fuel vapor composition representative of that which the vehicle would generate with the fuel mixture used for the current test. Manufacturers shall develop a procedure to precondition the evaporative canister, if the vehicle is so equipped, for the different fuel. The procedure shall represent a canister loading equivalent to that specified in paragraph (h)(1) of this section and shall be approved in advance by the Administrator.

(i) [Reserved]

(j) For the supplemental two-diurnal test sequence described in § 86.1230–96, one of the following methods shall be used to precondition evaporative canisters during the soak period specified in paragraph (g) of this section. For vehicles with multiple canisters in a series configuration, the set of canisters must be preconditioned as a unit. For vehicles with multiple canisters in a parallel configuration, each canister must be preconditioned separately. In addition, for model year 1998 and later vehicles equipped with refueling canisters, these canisters shall be preconditioned for the supplemental two-diurnal test sequence according to the procedure in paragraph (j)(1) of this section. Canister emissions are measured to determine breakthrough. Breakthrough is here defined as the point at which the cumulative quantity of hydrocarbons emitted is equal to 2 grams.

(1) *Butane loading to breakthrough.* The following procedure provides for emission measurement in an enclosure. Breakthrough may also be determined by measuring the weight gain of an auxiliary evaporative canister connected downstream of the vehicle's canister, in which case, the following references to the enclosure can be ignored. The auxiliary canister shall be well purged prior to loading. If production evaporative canisters are equipped with a functional service port designed for vapor load or purge steps, the service port shall be used during testing to precondition the canister.

(i) Prepare the evaporative/refueling emission canister for the canister loading operation. The canister shall not be removed from the vehicle, unless access to the canister in its normal location is so restricted that purging and loading can only reasonably be accomplished by removing the canister from the vehicle. Special care shall be taken during this step to avoid damage to the components and the integrity of the fuel system. A replacement canister may be temporarily installed during the soak period while the canister from the test vehicle is preconditioned.

(ii) The evaporative emission enclosure shall be purged for several minutes. WARNING: If at any time the concentration of hydrocarbons, of methanol, or of methanol and hydrocarbons exceeds 15,000 ppm C the enclosure should be immediately purged. This concentration provides at least a 4:1 safety factor against the lean flammability limit.

(iii) The FID hydrocarbon analyzer shall be zeroed and spanned immediately prior to the canister loading procedure.

(iv) If not already on, the evaporative enclosure mixing fan shall be turned on at this time.

(v) Place the vehicle in a sealed enclosure and measure emissions with a FID.

(vi)(A) For gasoline-fueled vehicles, load the canister with a mixture composed of 50 percent butane and 50 percent nitrogen by volume at a rate of 40 grams butane per hour.

(B) For methanol-fueled and flexible-fueled vehicles, canister preconditioning shall be performed with a fuel vapor composition representative of that which the vehicle would generate with the fuel mixture used for the current test. Manufacturers shall develop a procedure to precondition the evaporative canister, if the vehicle is so equipped, for the different fuel.

(vii) As soon as the canister reaches breakthrough, the vapor source shall be shut off.

(viii) Reconnect the evaporative emission canister and restore the vehicle to its normal operating condition.

(2) *Load with repeated diurnal heat builds to breakthrough.* The following procedure provides for emission measurement in an enclosure. Breakthrough may also be determined by measuring the weight gain of an auxiliary evaporative canister connected downstream of the vehicle's canister, in which case, the following references to the enclosure can be ignored. The auxiliary canister shall be well purged with dry air prior to loading.

(i) The evaporative emission enclosure shall be purged for several minutes. WARNING: If at any time the concentration of hydrocarbons, of methanol, or of methanol and hydrocarbons exceeds 15,000 ppm C the enclosure should be immediately purged. This concentration provides at least a 4:1 safety factor against the lean flammability limit.

(ii) The FID hydrocarbon analyzer shall be zeroed and spanned immediately prior to the diurnal heat builds.

(iii) If not already on, the evaporative enclosure mixing fan shall be turned on at this time.

(iv) The fuel tank(s) of the prepared vehicle shall be drained and filled with test fuel, as specified in § 86.1213, to the ''tank fuel volume'' defined in § 86.082–2. The average temperature of the dispensed fuel shall be 60±12 °F (16±7 °C). The fuel tank cap(s) shall be installed within 1 minute after refueling.

(v) Within one hour of being refueled, the vehicle shall be placed, with the engine shut off, in the evaporative emission enclosure. The fuel tank temperature sensor shall be connected to the temperature recording system. A heat source, specified in § 86.1207–90(d), shall be properly positioned with respect to the fuel tank(s) and connected to the temperature controller.

(vi) The temperature recording system shall be started.

(vii) The fuel may be artificially heated to the starting diurnal temperature.

(viii) When the fuel temperature reaches at least 69 °F (21 °C), immediately turn off purge blower (if not already off); close and seal enclosure doors; and initiate measurement of the hydrocarbon level in the enclosure.

(ix) When the fuel temperature reaches 72±2 °F (22±1 °C), start the diurnal heat build.

(x) The fuel shall be heated in such a way that its temperature change conforms to the following function to within ±4 °F (±3 °C):

$F = T_o + 0.4t$; or

for SI units,

$C = T_o + (2/9)t$.

Where,
F=fuel temperature, °F;
C=fuel temperature, °C;
t=time since beginning of test, minutes; and
T_o=initial temperature in °F (°C for SI units).

(xi) As soon as breakthrough occurs or when the fuel temperature reaches 96 °F (36 °C), whichever occurs first, the heat source shall be turned off, the enclosure doors shall be unsealed and opened, and the vehicle fuel tank cap(s) shall be removed. If breakthrough has not occurred by the time the fuel temperature reaches 96 °F (36 °C), the heat source shall be removed from the vehicle, the vehicle shall be removed (with engine still off) from the evaporative emission enclosure and the entire procedure outlined in paragraph (j)(2) of this section shall be repeated until breakthrough occurs.

(xii) After breakthrough occurs, the fuel tank(s) of the prepared vehicle shall be drained and filled with test fuel, as specified in § 86.1213, to the ''tank fuel volume'' defined in § 86.082–2. The fuel shall be stabilized to a temperature within 3 °F of the lab ambient before beginning the driving cycle for the dynamometer run.

(k) The Administrator may conduct the vehicle preparation and preconditioning for measurement of fuel economy or exhaust emissions according to the procedures specified in §§ 86.1232–90 and 86.1233–90, in lieu of the procedures specified in this section.

(l) Vehicles to be tested for exhaust emissions only shall be processed according to §§ 86.1235 through 86.1237. Vehicles to be tested for evaporative emissions shall be processed in accordance with the procedures in §§ 86.1233 through 86.1238, starting with § 86.1235.

(m) Vehicles to be tested for evaporative emissions with the supplemental

two-diurnal test sequence described in § 86.1230–96, shall proceed according to §§ 86.1235 through 86.1237, followed by the supplemental hot soak test (see § 86.1238–96(k)) and the supplemental diurnal emission test (see § 86.1233–96(p)).

[58 FR 16056, Mar. 24, 1993, as amended at 59 FR 48524, Sept. 21, 1994; 60 FR 43904, Aug. 23, 1995]

§ 86.1233–90 Diurnal breathing loss test.

(a) Following vehicle preparation and vehicle preconditioning procedures described in §§ 86.1231 and 86.1232, the diurnal test shall start not less than 10 or more than 35 hours after the end of the preconditioning procedure. The start of vehicle operation shall follow the end of the diurnal test within one hour.

(b) The evaporative emissions enclosure shall be purged for several minutes immediately prior to the test.

NOTE: If at any time the concentration of hydrocarbons, or of methanol, or of hydrocarbons and methanol exceeds 15,000 ppm C the enclosure should be immediately purged. This concentration provides a 4:1 safety factor against the lean flammability limit.

(c) The FID hydrocarbon analyzer shall be zeroed and spanned immediately prior to the test.

(d) Impingers charged with known volumes of pure deionized water shall be placed in the methanol sampling system (methanol-fueled vehicles only).

(e) If not already on, the evaporative enclosure mixing fan(s) shall be turned on at this time.

(f) For vehicles with multiple tanks, the largest tank shall be designated as the primary tank and shall be heated in accordance with the procedures described in paragraph (m) of this section. All other tanks shall be designated as auxiliary tanks and shall undergo a similar heat build such that the fuel temperature shall be within 3 °F (1.6 °C) of the primary tank.

(g) Immediately prior to the diurnal breathing loss test, the fuel tank(s) of the prepared vehicle shall be drained and recharged with the specified test fuel as defined in § 86.1213 to the prescribed ''tank fuel volume'', as defined in § 86.078–2. The temperature of the fuel prior to its delivery to the fuel tank shall be between 45 °F and 60 °F (7.2 °C and 16 °C). The fuel tank cap(s) is not installed until the diurnal heat build begins.

(h) The test vehicle, with the engine shut off, shall be moved into the evaporative emission enclosure, the test vehicle windows and any storage compartments shall be opened, the fuel tank temperature sensor shall be connected to the temperature recording system, and, if required, the heat source shall be properly positioned with respect to the fuel tank(s) and/or connected to the temperature controller.

(i) The temperature recording system shall be started.

(j) The fuel may be artificially heated to the starting diurnal temperature, 60 °F±2 °F (16 °C±1.1 °C).

(k) When the fuel temperature recording system reaches at least 58 °F (14 °C), immediately:

(1) Install fuel tank cap(s).

(2) Turn off purge blowers, if not already off at this time.

(3) Close and seal enclosure doors.

(l) When the fuel temperature recording system reaches 60 °F±2 °F (16 °C °C±1.1 °C) immediately:

(1) Analyze enclosure atmosphere for hydrocarbons and record. This is the initial (time = 0 minutes) hydrocarbon concentration, C_{HCi} (*see* § 86.1243).

(2) Simultaneously with initiation of the hydrocarbon analysis, initiate collection of the methanol sample by drawing a sample from the enclosure through the sampling system for four minutes. This is the initial methanol measurement from which methanol concentration C_{CH3OHi} and mass are calculated. Remove impingers and replace with freshly charged clean impingers which will be used to collect the final methanol sample.

(3) Record barometric pressure reading. This is the initial (time = 0 minutes) barometric pressure, P_{bi} (*see* § 86.1243).

(4) Record enclosure ambient temperature. This is the initial (time = 0 minutes) enclosure ambient temperature, T_i (*see* § 86.1243).

(5) Start diurnal heat build and record time. This commences the 60±2 minute test period.

(m) The fuel shall be heated in such a way that its temperature change conforms to the following function to within ±3 °F (±1.6 °C):

(1) $F = T_o + 0.4t$

(2) *For SI units,* $C = T_o + (2/9)t$

Where:
F = fuel temperature, °F.
C = fuel temperature, °C.
t = heating time, minutes.
T_o = initial temperature in °F (or in °C for SI units).

After 60±2 minutes of heating, the fuel temperature rise shall be 240±1 °F (13.30±0.5 °C).

(n) The FID hydrocarbon analyzer shall be zeroed and spanned immediately prior to the end of the diurnal test.

(o)(1) The end of the diurnal breathing loss test occurs 60±2 minutes after the heat build begins (paragraph (k)(4) of this section). Analyze the enclosure atmosphere for hydrocarbon and record. This is the final (time = 60 minutes) hydrocarbon concentration, C_{HCf} (*see* § 86.1234). The time (or elapsed time) of this analysis shall be recorded.

(2) Simultaneously with the start of the hydrocarbon analysis, initiate collection of the methanol sample. Sample for four minutes. This is the final methanol sample.

(3) *Alternate method for methanol sampling.* Since sample times of longer than four minutes may be necessary in order to collect an adequate and representative sample of methanol at the end of a test (when SHED concentrations are usually increasing rapidly), it may be necessary to rapidly collect the methanol sample in a bag and then bubble the bag sample through the impingers at the specified flow rate. The time elapsed between collection of the bag sample and flowing through the impingers should be minimized in order to prevent any losses. This alternative must be adopted if the four minute sample period is inadequate to collect a sample of sufficient concentration to allow accurate GC analysis.

(4) Record barometric pressure reading. This is the final (time = 60 minutes) barometric pressure, P_{bf} (*see* § 86.1243).

(5) Record enclosure ambient temperature. This is the final (time = 60 minutes) enclosure ambient temperature, T_f (*see* § 86.1243).

(p) The heat source shall be turned off and the enclosure doors unsealed.

(q) The heat source shall be moved away from the vehicle, if required, and/or disconnected from the temperature controller, the fuel tank temperature sensor shall be disconnected from the temperature recording system, and the test vehicle windows and any storage compartments may be closed. The vehicle shall be either driven or pushed out of the evaporative emission enclosure.

[54 FR 14568, Apr. 11, 1989]

§ 86.1233–96 Diurnal emission test.

(a)(1) The diurnal emission test for gasoline-, methanol- and gaseous-fueled vehicles consists of three 24-hour test cycles following the hot soak test. Emissions are measured for each 24-hour cycle, with the highest emission level used to determine compliance with the standards specified in subpart A of this part. The Administrator may truncate a test after any 24-hour cycle without affecting the validity of the collected data. Sampling of emissions from the running loss and hot soak tests is not required as preparation for the diurnal emission test. The diurnal emission test may be conducted as part of either the three-diurnal test sequence or the supplemental two-diurnal test sequence, as described in § 86.1230–96.

(2) For the full three-diurnal test sequence, the diurnal emission test outlined in paragraphs (b) through (o) of this section follows the high-temperature hot soak test concluded in § 86.1238–96(j).

(3) For the supplemental two-diurnal test sequence, the diurnal emission test outlined in paragraph (p) of this section follows the alternate hot soak test specified in § 86.1238–96(k). This test is not required for gaseous-fueled vehicles.

(b) The test vehicle shall be soaked for not less than 6 hours nor more than 36 hours between the end of the hot soak test and the start of the diurnal emission test. For at least the last 6 hours of this period, the vehicle shall be soaked at 72±3 °F. The temperature tolerance may be waived for up to 10

minutes to allow purging of the enclosure or transporting the vehicle into the enclosure at the beginning of the diurnal emission test.

(c) The test vehicle shall be exposed to ambient temperatures cycled according to the profile specified in § 86.1233 and appendix II of this part.

(1) Temperatures measured with the underbody temperature sensor shall follow the profile with a maximum deviation of 3 °F at any time and an average temperature deviation not to exceed 2 °F, where the average deviation is calculated using the absolute value of each measured deviation. In addition, the temperature from the sidewall temperature sensors shall follow the profile with a maximum deviation of 5 °F at any time.

(2) Ambient temperatures shall be measured at least every minute. Temperature cycling shall begin when time=0 minutes, as specified in paragraph (i)(5) of this section.

(d) The diurnal enclosure shall be purged for several minutes prior to the test. WARNING: If at any time the concentration of hydrocarbons, of methanol or of methanol and hydrocarbons exceeds 15,000 ppm C the enclosure should be immediately purged. This concentration provides at least a 4:1 safety factor against the lean flammability limit.

(e) The test vehicle, with the engine shut off and the test vehicle windows and luggage compartment(s) opened, shall be moved into the diurnal enclosure.

(f)–(g) [Reserved]

(h) Prior to sampling for emissions and throughout the period of cycled ambient temperatures, the mixing fan(s) shall circulate the air at a rate of 0.8±0.2 cfm per cubic foot of ambient volume. The mixing fan(s), plus any additional fans if needed, shall also maintain a minimum wind speed of 5 mph (8 km/hr) under the fuel tank of the test vehicle. The Administrator may adjust fan speed and location to ensure sufficient air circulation around the fuel tank. The wind speed requirement may be satisfied by consistently using a fan configuration that has been demonstrated to maintain a broad 5-mph air flow in the vicinity of the vehicle's fuel tank, subject to verification by the Administrator.

(i) Emission sampling may begin as follows:

(1) The FID (or HFID) hydrocarbon analyzer shall be zeroed and spanned immediately prior to the sampling.

(2) Impingers charged with known volumes of pure deionized water shall be placed in the methanol sampling system (methanol-fueled vehicles only).

(3) Turn off purge blowers (if not already off).

(4) Close and seal enclosure doors (if not already closed and sealed).

(5) Within 10 minutes of closing and sealing the doors, analyze enclosure atmosphere for hydrocarbons and record. This is the initial (time=0 minutes) hydrocarbon concentration, C_{HCi}, required in § 86.1243. Hydrocarbon emissions may be sampled continuously during the test period.

(6) Analyze the enclosure atmosphere for methanol, if applicable, and record. The methanol sampling must start simultaneously with the initiation of the hydrocarbon analysis and continue for 4.0±0.5 minutes. This is the initial methanol concentration, C_{CH_3OHi}, required in § 86.1243. Record the time elapsed during this analysis. If the 4-minute sample period is inadequate to collect a sample of sufficient concentration to allow accurate GC analysis, rapidly collect the methanol sample in a bag and then bubble the bag sample through the impingers at the specified flow rate. The time elapsed between collection of the bag sample and flow through the impingers should be minimized to prevent any losses. If the test is conducted in a fixed-volume enclosure that allows airflow into and out of the enclosure, the effect of makeup air dilution must be factored into the analysis.

(j) If testing indicates that a vehicle design may result in fuel temperature responses during enclosure testing that are not representative of in-use summertime conditions, the Administrator may adjust air circulation and temperature during the test as needed to ensure that the test sufficiently duplicates the vehicle's in-use experience.

(k) The FID (or HFID) hydrocarbon analyzer shall be zeroed and spanned

immediately prior to the end of each emission sampling period.

(l) Fresh impingers shall be installed in the methanol collection system immediately prior to the end of each emission measurement, if applicable.

(m) The end of the first, second, and third emission sampling period shall occur 1440±6, 2880±6, 4320±6 minutes, respectively, after the beginning of the initial sampling, as specified in paragraph (i)(5) of this section.

(1) At the end of each emission sampling period, analyze the enclosure atmosphere for hydrocarbons and record. This is the final hydrocarbon concentration, C_{HCf}, required in §86.1243. The emission measurement at the end of each period becomes the initial hydrocarbon concentration, C_{HCi}, of the next emission sampling period.

(2) Analyze the enclosure atmosphere for methanol, if applicable, and record. The methanol sampling must start simultaneously with the initiation of the hydrocarbon analysis and continue for 4.0±0.5 minutes. This is the final (time=1440 minutes) methanol concentration, C_{CH_3OHf}, required in §86.1243. Record the time elapsed during this analysis. If the 4-minute sample period is inadequate to collect a sample of sufficient concentration to allow accurate GC analysis, rapidly collect the methanol sample in a bag and then bubble the bag sample through the impingers at the specified flow rate. The time elapsed between collection of the bag sample and flow through the impingers should be minimized to prevent any losses. If the test is conducted in a fixed-volume enclosure that allows airflow into and out of the enclosure, the effect of makeup air dilution must be factored into the analysis.

(n) At the end of the temperature cycling period the enclosure doors shall be unsealed and opened, the test vehicle windows and luggage compartments may be closed and the test vehicle, with the engine shut off, shall be removed from the enclosure.

(o) This completes the full three-diurnal evaporative emission test sequence described in §86.1230–96.

(p) For the supplemental two-diurnal test sequence described in §86.1230–96, the following steps shall be performed in lieu of the steps described in paragraphs (b) through (n) of this section.

(1) For the supplemental two-diurnal test sequence, the test vehicle shall be soaked for not less than 6 hours nor more than 36 hours between the end of the hot soak test described in §86.1238–96(k), and the start of the two-diurnal emission test. For at least the last 6 hours of this period, the vehicle shall be soaked at 72±3 °F.

(2) The vehicle shall be tested for diurnal emissions according to the procedures specified in paragraphs (c) through (n) of this section, except that the test includes only two 24-hour periods. Therefore the end of the first and second emission sampling periods shall occur 1440±6 and 2880±6 minutes, respectively, after the initial sampling.

(3) This completes the supplemental two-diurnal test sequence for evaporative emission measurement.

[58 FR 16057, Mar. 24, 1993; 59 FR 48524, Sept. 21, 1994, as amended at 60 FR 43905, Aug. 23, 1995]

§86.1234–96 Running loss test.

(a) *Overview*. Gasoline- and methanol-fueled vehicles are to be tested for running loss emissions during simulated high-temperature urban driving; this test is not required for gaseous-fueled vehicles. During operation, tank temperatures are controlled according to a prescribed profile to simulate in-use conditions. If the vehicle is determined to have exceeded the standard before the end of the running loss test, the test may be terminated without invalidating the data. The test can be run either in a sealed enclosure or with the point-source method, as specified in paragraph (g) of this section. Measurement of vapor temperature is optional during the running loss test; however, if testing by the Administrator shows that a vehicle has exceeded an emission standard without measurement of vapor temperatures, the manufacturer may, utilizing its own resources, conduct subsequent testing on that vehicle to determine if the exceedance is attributable to inadequate control of vapor temperatures.

(b) *Driving schedule.* Conduct the running loss test by operating the test vehicle through three Heavy-Duty Vehicle Urban Dynamometer Driving

Schedules (see § 86.1215 and appendix I of this part). Fifteen seconds after the engine starts, place the transmission in gear. Twenty seconds after the engine starts, begin the initial vehicle acceleration of the driving schedule. The transmission shall be operated according to the specifications of § 86.1228 during the driving cycles.

(c) *Dynamometer operation.* (1) The exhaust from the vehicle must be routed outside the test cell or enclosure. Exhaust gases may, but need not, be collected and sampled.

(2) Provisions of § 86.1235–85(c) shall apply.

(3) Practice runs over the prescribed driving schedule may not be performed at test point.

(4) Provisions of § 86.1235–85 (e) and (f) shall apply.

(5) If the dynamometer horsepower must be adjusted manually, it shall be set within 1 hour prior to the running loss test phase. The test vehicle shall not be used to make this adjustment. Dynamometers using automatic control of preselectable power settings may be set any time prior to the beginning of the emissions test.

(6) Dynamometer roll or shaft revolutions shall be used to determine the actual driving distance for the running loss test, D_{RL}, required in § 86.1243. The revolutions shall be measured on the same roll or shaft used for measuring the vehicle's speed.

(7) Provisions of § 86.1235–85(i) shall apply.

(8) The test run may be stopped if a warning light or gauge indicates that the vehicle's engine coolant has overheated.

(d) *Engine starting and restarting.* (1) Provisions of § 86.1236–85(a) shall apply.

(2) If the vehicle does not start after the manufacturer's recommended cranking time (or 10 continuous seconds in the absence of a manufacturer's recommendation), cranking shall cease for the period recommended by the manufacturer (or 10 seconds in the absence of a manufacturer's recommendation). This may be repeated for up to three start attempts. If the vehicle does not start after three attempts, the reason for failure to start shall be determined. If failure to start is an operational error, the vehicle shall be rescheduled for testing, starting with the soak period immediately preceding the running loss test.

(3) If failure to start is caused by a vehicle malfunction, corrective action of less than 30 minutes duration may be taken (according to § 86.090–25), and the test continued, provided that the ambient conditions to which the vehicle is exposed are maintained at 95±5 °F (35±3 °C). When the engine starts, the timing sequence of the driving schedule shall begin. If failure to start is caused by vehicle malfunction and the vehicle cannot be started, the test shall be voided, the vehicle removed from the dynamometer, and corrective action may be taken according to § 86.090–25. The reason for the malfunction (if determined) and the corrective action taken shall be reported to the Administrator.

(4) Provisions of § 86.1236–85(b) shall apply.

(e) *Pressure checks.* No pressure checks of the evaporative system shall be allowed. Under no circumstances will any changes/repairs to the evaporative emissions control system be allowed.

(f) *Temperature stabilization.* Immediately after the hot transient exhaust emission test, the vehicle shall be soaked in a temperature controlled area for a maximum of 6 hours until the fuel temperature is stabilized. The fuel may be heated or cooled to stabilize fuel temperatures, but the fuel heating rate must not exceed 5 °F in any 1-hour interval during the soak period. A manufacturer may use a faster heating rate or a longer period for stabilizing fuel temperatures if the needed heating cannot be easily accomplished in the 6-hour period, subject to Administrator approval.

(1) Fuel temperatures must be held at 95±3 °F for at least one hour before the start of the running loss test.

(2) If a vehicle's fuel temperature profile has an initial temperature lower than 95 °F, as described in § 86.1229–85(d)(7)(v), the fuel in the test vehicle must be stabilized to within 3 °F of that temperature for at least one hour before the start of the running loss test.

(g) *Running loss test.* The running loss test may be conducted either by the

enclosure method, or by the point-source method.

(1) *Enclosure method.* (i) The running loss enclosure shall be purged for several minutes immediately prior to the test. WARNING: If at any time the concentration of hydrocarbons, of methanol, or of methanol and hydrocarbons exceeds 15,000 ppm C the enclosure should be immediately purged. This concentration provides at least a 4:1 safety factor against the lean flammability limit.

(ii) The FID hydrocarbon analyzer shall be zeroed and spanned immediately prior to the test.

(iii) If not already on, the running loss enclosure mixing fan(s) shall be turned on at this time. Throughout the test, the mixing fan(s) shall circulate the air at a rate of at least 1.0 cfm per cubic foot of ambient volume.

(iv) The test vehicle, with the engine off, shall be moved onto the dynamometer in the running loss enclosure. The vehicle engine compartment cover shall be unlatched, but closed as much as possible, allowing for the air intake equipment specified in paragraph (g)(1)(vii) of this section. The vehicle engine compartment cover may be closed if alternate routing is found for the air intake equipment. Any windows, doors, and luggage compartments shall be closed. A window may be opened to direct cooling air into the passenger compartment of the vehicle, if the vehicle is not equipped with its own air conditioning.

(v) Fans shall be positioned as described in §§ 86.1207–96 (d) and (h).

(vi) The vehicle air conditioning system (if so equipped) shall be set to the ''normal'' air conditioning mode and adjusted to the minimum discharge air temperature and high fan speed. Vehicles equipped with automatic temperature controlled air conditioning systems shall be set to operate in ''automatic'' temperature and fan modes with the system set at 72 °F.

(vii) Connect the air intake equipment to the vehicle, if applicable. This connection shall be made to minimize leakage.

(viii) The temperature and pressure recording systems shall be started. Measurement of vapor temperature is optional during the running loss test. If vapor temperature is not measured, fuel tank pressure need not be measured.

(ix) Turn off purge blowers (if not already off).

(x) The temperature of the liquid fuel shall be monitored and recorded at least every 15 seconds with the temperature recording system specified in § 86.1207–96(e).

(xi) Close and seal the enclosure doors.

(xii) When the ambient temperature is 95±5 °F (35±3 °C) and the fuel has been stabilized according to paragraph (f) of this section, the running loss test may begin. Measure the initial ambient temperature and pressure.

(A) Analyze enclosure atmosphere for hydrocarbons and record. This is the initial (time=0 minutes) hydrocarbon concentration, C_{HCi}, required in § 86.1243. Hydrocarbon emissions may be sampled continuously during the test period.

(B) Analyze the enclosure atmosphere for methanol, if applicable, and record. The methanol sampling must start simultaneously with the initiation of the hydrocarbon analysis and continue for 4.0±0.5 minutes. This is the initial (time=0 minutes) methanol concentration, C_{CH_3OHi}, required in § 86.1243. Record the time elapsed during this analysis. If the 4-minute sample period is inadequate to collect a sample of sufficient concentration to allow accurate GC analysis, rapidly collect the methanol sample in a bag and then bubble the bag sample through the impingers at the specified flow rate. The time elapsed between collection of the bag sample and flow through the impingers should be minimized to prevent any losses.

(xiii) Start the engine and begin operation of the vehicle over the drive cycle specified in paragraph (b) of this section.

(xiv) The ambient temperature shall be maintained at 95±5 °F (95±2 °F on average) during the running loss test, measured at the inlet to the cooling fan in front of the vehicle; it shall be recorded at least every 60 seconds.

(xv) The fuel temperature during the dynamometer drive shall be controlled to match the fuel tank temperature

profile determined in § 86.1229. Measured fuel temperatures must be within ±3 °F of the target profile throughout the test run. Vapor temperatures, if measured, must be within ±5 °F of the target profile during the first 4186 seconds of the running loss test, and within ±3 °F for the remaining 120 seconds of the test run. For any vehicle complying with the test standards, vapor temperatures may be higher than the specified tolerances without invalidating test results. For testing by the Administrator, vapor temperatures may be lower than the specified tolerances without invalidating test results. If the test vehicle has more than one fuel tank, the temperatures for both fuel tanks shall follow the target profiles determined in § 86.1229. The control system shall be tuned and operated to provide smooth and continuous tank temperature profiles that are representative of the on-road profiles.

(xvi) Tank pressure shall not exceed 10 inches of water at any time during the running loss test unless a pressurized system is used and the manufacturer demonstrates that vapor would not be vented to the atmosphere upon fuel cap removal. A vehicle may exceed the pressure limit for temporary periods during the running loss test, up to 10 percent of the total driving time, provided that the vehicle has demonstrated conformance with the pressure limit during the entire outdoor driving period specified in § 86.1229. Measurement of fuel tank pressures will be considered valid only if vapor temperatures are measured and controlled to the tolerances specified in paragraph (g)(1)(xv) of this section.

(xvii) The FID (or HFID) hydrocarbon analyzer shall be zeroed and spanned immediately prior the end of the test.

(xviii) Fresh impingers shall be installed in the methanol collection system immediately prior to the end of the test, if applicable.

(xix) The running loss test ends with the completion of the third 2-minute idle period.

(xx) At the end of the running loss test:

(A) Analyze the enclosure atmosphere for hydrocarbons and record. This is the final hydrocarbon concentration, C_{HCf}, required in § 86.1243.

(B) Analyze the enclosure atmosphere for methanol, if applicable, and record. The methanol sampling must start prior to the end of the test and continue for 4.0±0.5 minutes. The methanol sampling must be completed within 2 minutes after the end of the running loss test. This is the final methanol concentration, C_{CH_3OHf}, required in § 86.1243. Record the time elapsed during this analysis. If the 4-minute sample period is inadequate to collect a sample of sufficient concentration to allow accurate GC analysis, rapidly collect the methanol sample in a bag and then bubble the bag sample through the impingers at the specified flow rate. The time elapsed between collection of the bag sample and flow through the impingers should be minimized to prevent any losses.

(C) Turn off all the fans specified in § 86.1207–96(d). Also, the time that the vehicle's engine compartment cover is open for removal of air intake equipment, if applicable, shall be minimized to avoid loss of heat from the engine compartment.

(xxi) Turn off any CVS apparatus (if not already turned off).

(2) *Point-source method.* (i) The test vehicle, with the engine off, shall be moved onto the dynamometer. The vehicle engine compartment cover and any windows, doors, and luggage compartments shall be closed.

(ii) Fans shall be positioned as described in §§ 86.1235–85(b) and 86.1207–96(d).

(iii) The running loss vapor vent collection system shall be properly positioned at the potential fuel vapor vents or leaks of the vehicle's fuel system. Typical vapor vents for current fuel systems are the ports of the evaporative emission canister and the pressure relief vent of the fuel tank (typically integrated into the fuel tank cap).

(iv) The running loss vapor vent collection system may be connected to a PDP–CVS or CFV–CVS bag collection system. Otherwise, running loss vapors shall be sampled continuously with analyzers meeting the requirements of § 86.1207–96(b).

(v) Fans shall be positioned as described in § 86.1207–96(d).

(vi) The vehicle air conditioning system (if so equipped) shall be set to the ''normal'' air conditioning mode and adjusted to the minimum discharge air temperature and high fan speed. Vehicles equipped with automatic temperature controlled air conditioning systems shall be set to operate in ''automatic'' temperature and fan modes with the system set at 72 °F.

(vii) The temperature and pressure recording systems shall be started. Measurement of vapor temperature is optional during the running loss test. If vapor temperature is not measured, fuel tank pressure need not be measured.

(viii) The temperature of the liquid fuel shall be monitored and recorded at least every 15 seconds with the temperature recording system specified in §86.1207–96(e).

(ix) When the ambient temperature is 95±5 °F (35±3 °C) and the fuel tank temperature is 95±3 °F the running loss test may begin.

(x) The ambient temperature shall be maintained at 95±5 °F (95±2 °F on average) during the running loss test, measured at the inlet to the cooling fan in front of the vehicle; it shall be recorded at least every 60 seconds.

(xi) Fuel temperatures shall be controlled according to the specifications of paragraph (g)(1)(xv) of this section.

(xii) The tank pressure requirements described in paragraph (g)(1)(xvi) of this section apply also to running loss testing by the point source method.

(xiii) The running loss test ends with completion of the third 2-minute idle period.

(xiv) If emissions are collected in bags, the sample bags must be analyzed within 20 minutes of their respective sample collection phases, as described in §86.137–94(b)(15). The results of the analysis are used in §86.1243 to calculate the mass of hydrocarbons emitted.

(xv) At the end of the running loss test, turn off all the fans specified in §86.1207–96(d).

(h) Following the completion of the running loss drive, the vehicle may be tested for hot soak emissions as specified in §86.1238–96.

[58 FR 16059, Mar. 24, 1993, as amended at 59 FR 48524, Sept. 21, 1994; 60 FR 43905, Aug. 23, 1995]

§86.1235–85 Dynamometer procedure.

(a) The dynamometer run consists of one HDV urban dynamometer driving schedule cycle starting within one hour after completion of the diurnal loss test. This run includes engine startup (with all accessories turned off) and operation over the driving schedule.

(b) During dynamometer operation, one or more cooling fans shall be positioned so as to direct cooling air to the vehicle in an appropriate manner. The engine compartment cover shall be closed. If, however, the manufacturer can show that the engine compartment cover must be open to provide a test representative of field operation, the Administrator will allow the engine cover to be open. In the case of vehicles with front engine compartments, the fan(s) shall be squarely positioned within 12 inches of the vehicle. In the case of vehicles with rear engine compartments (or if special designs make the above impractical), the cooling fan(s) shall be placed in a position to provide sufficient air to maintain vehicle cooling. The fan capacity shall normally not exceed 10,600 (cfm (5.0 $m^{3/}$ s)). If, however, the manufacturer can show that during field operation the vehicle receives additional cooling, and that such additional cooling is needed to provide a representative test, the fan capacity may be increased or additional fans used.

(c) The vehicle speed as measured from the dynamometer rolls shall be used.

(d) Practice runs over the prescribed driving schedule may be performed at test points, provided emissions are not measured, for the purpose of finding the minimum throttle action to maintain the proper speed-time relationship, or to permit test procedure adjustments.

NOTE: When using two-roll dynamometers a truer speed-time trace may be obtained by minimizing the rocking of the vehicle in the rolls. The rocking of the vehicle changes the tire rolling radius on each roll. This rocking

may be minimized by restraining the vehicle horizontally (or nearly so) by using a cable and winch, or chain.

(e) Drive wheel tires shall be inflated to the maximum gauge pressure recommended to the ultimate purchaser. If drive wheel tires have a maximum recommended inflation gauge pressure of less than 45 psi (310 kPa), they may be inflated up to a gauge pressure of 45 psi (310 kPa) in order to prevent tire damage. The drive wheel tire pressure shall be recorded with the test results.

(f) If the dynamometer has not been operated during the 2-hour period immediately preceding the test it shall be warmed up for 15 minutes by operating at 30 mph (48 km/h) using a non-test vehicle or as recommended by the dynamometer manufacturer.

(g) If the dynamometer horsepower must be adjusted manually, the power shall be set within 1 hour prior to dynamometer operation preceding the hot soak test. The test vehicle shall not be used to make the adjustment.

(h) If the dynamometer horsepower is selected by automatic control, the power may be set anytime prior to the beginning of the driving cycle.

(i) Multiple drive axle vehicles will be tested in one axle drive mode of operation. Full time multiple drive axle vehicles will have all but one axle temporarily disengaged by the vehicle manufacturer. Multiple drive axle vehicles which can be manually shifted to a one axle drive mode will be tested in the one axle drive mode of operation, unless this would pose a safety hazard, in which case all but one axle will be temporarily disengaged by the vehicle manufacturer.

§ 86.1235–96 Dynamometer procedure.

Section 86.1235–96 includes text that specifies requirements that differ from § 86.1235–85. Where a paragraph in § 86.1235–85 is identical and applicable to § 86.1235–96, this may be indicated by specifying the corresponding paragraph and the statement ''[Reserved]. For guidance see § 86.1235–85.''

(a) The dynamometer run consists of one HDV urban dynamometer driving schedule cycle starting not less than 12 nor more than 36 hours after completion of the drive specified in § 86.1232–96. This run includes engine startup (with all accessories turned off) and operation over the driving schedule.

(b) through (i) [Reserved]. For guidance see § 86.1235–85.

[58 FR 16060, Mar. 24, 1993]

§ 86.1236–85 Engine starting and restarting.

(a) *Starting.* (1) The engine shall be started (including choke operation) according to the manufacturers recommended starting procedures in the owner's manual. The initial idle period shall begin when the engine starts.

(2) The operator may use the choke, accelerator pedal, etc., where necessary to keep the engine running.

(3) If the manufacturer's operating instructions in the owner's manual do not specify a warm engine starting procedure, the engine shall be started by depressing the accelerator pedal about half way and cranking the engine until it starts.

(4) If the vehicle does not start after the manufacturer's recommended cranking time (or 10 continuous seconds in the absence of a manufacturer's recommendation), cranking shall cease for the period recommended by the manufacturer (or 10 seconds in the absence of a manufacturer's recommendation). This may be repeated for up to three start attempts. If the vehicle does not start after three attempts, the reason for failure to start shall be determined. If failure to start is an operational error, the vehicle shall be rescheduled for the dynamometer run. If failure to start is caused by a vehicle malfunction, corrective action of less than 30 minutes duration may be taken, and the test continued. When the engine starts, the driving schedule timing sequence shall begin. If failure to start is caused by vehicle malfunction and the vehicle cannot be started, the test shall be voided, the vehicle removed from the dynamometer, and corrective action may be taken. The reasons for the malfunction (if determined) and the corrective action taken shall be recorded.

(b) *Stalling.* (1) If the engine stalls during an idle period, the engine shall be restarted immediately and the driving schedule continued. If the engine cannot be started soon enough to allow

the vehicle to follow the next acceleration as prescribed, the driving schedule indicator shall be stopped. When the vehicle restarts, the driving schedule indicator shall be reactivated.

(2) If the engine stalls during some operating mode other than idle, the driving schedule indicator shall be stopped, the vehicle shall then be restarted and accelerated to the speed required at that point in the driving schedule and the driving schedule continued. During acceleration to this point, shifting shall be performed in accordance with §86.1228–85.

(3) If the vehicle will not restart within one minute, the test shall be voided, the vehicle removed from the dynamometer, corrective action taken, and the vehicle rescheduled for testing. The reason for the malfunction (if determined) and the corrective action taken shall be recorded.

[48 FR 1456, Jan. 12, 1983, as amended at 58 FR 16060, Mar. 24, 1993]

§86.1237–85 Dynamometer runs.

(a) The vehicle shall be either driven or pushed onto the dynamometer; however, if driven, the period of engine operation between the end of the diurnal loss test and beginning of the hot soak preparation run shall not exceed 3 minutes, and the vehicle shall be driven at minimum throttle. The dynamometer run shall follow the diurnal heat build by not more than one hour. The vehicle shall be stored prior to dynamometer operation in such a manner that it is not exposed to precipitation (e.g., rain or dew).

(b) The following steps shall be taken for the dynamometer run:

(1) Place drive wheels of vehicle on the dynamometer.

(2) Position the cooling fan(s).

(3) Attach an exhaust tube to the vehicle tailpipe(s).

(4) Start the engine.

(5) Turn on the cooling fan(s).

(6) Operate the vehicle according to the dynamometer driving schedule (§86.1215–85).

(7) At the end of the last deceleration, disconnect the exhaust tube from the vehicle tailpipe(s) and drive vehicle from the dynamometer.

§86.1237–96 Dynamometer runs.

Section 86.1237–96 includes text that specifies requirements that differ from §86.1237–85. Where a paragraph in §86.1237–85 is identical and applicable to §86.1237–96, this may be indicated by specifying the corresponding paragraph and the statement ''[Reserved]. For guidance see §86.1237–85.''

(a) The vehicle shall be either driven or pushed onto the dynamometer; however, if driven, the total time of engine operation during the 12 to 36 hour soak period shall not exceed 3 minutes, and the vehicle shall be driven at minimum throttle. The vehicle shall be stored prior to dynamometer operation in such a manner that it is not exposed to precipitation (e.g., rain or dew).

(b) [Reserved]. For guidance see §86.1235–85.

[58 FR 16061, Mar. 24, 1993]

§86.1238–90 Hot soak test.

The one-hour hot-soak evaporative emission test shall be conducted immediately following one cycle of the dynamometer driving schedule.

(a) Prior to the completion of the dynamometer cycle, the evaporative emission enclosure shall be purged for several minutes.

(b) The FID hydrocarbon analyzer shall be zeroed and spanned immediately prior to the test.

(c) Fresh impingers shall be installed in the methanol sample collection system immediately prior to the start of the test, if applicable.

(d) If not already on, the evaporative enclosure mixing fan(s) shall be turned on at this time.

(e) Upon completion of the dynamometer run the exhaust tube shall be disconnected from the vehicle tailpipe(s), the cooling fan(s) shall be moved, and the vehicle shall be disconnected from the dynamometer and driven at minimum throttle to the vehicle entrance of the enclosure.

(f) The vehicle's engine must be stopped before any part of the vehicle enters the enclosure. The vehicle may be pushed or coasted into the enclosure.

(g) The test vehicle windows and any storage compartments shall be opened, if not already open.

(h) The temperature recording system shall be started and the time of engine shut off shall be noted on the evaporative emissions hydrocarbon data recording system.

(i) The enclosure doors shall be closed and sealed within two minutes of engine shutdown and within seven minutes after the end of the exhaust emission test. The steps after the end of the driving cycle should be done as quickly as possible to minimize the time needed to start the hot soak test.

(j) The 60±0.5 minute hot soak begins when the enclosure doors are sealed. The enclosure atmosphere shall be analyzed and recorded. This is the initial (time = 0 minutes) hydrocarbon concentration, C_{HCi}, for use in calculating evaporative losses (*see* § 86.1243). The ''zero'' time methanol sample shall be collected starting at the same time as the hydrocarbon analysis is started. Sampling shall continue for four minutes.

(k) The test vehicle shall be permitted to soak for a period of one hour in the enclosure.

(l) The FID hydrocarbon analyzer shall be zeroed and spanned immediately prior to the end of the test.

(m) Fresh impingers shall be installed in the methanol collection system immediately prior to the end of the test, if applicable.

(n) At the end of the 60±0.5 minute test period, the enclosure atmosphere shall again be analyzed (as described in § 86.1238–90(j) and the time recorded. This is the final (time = 60 minutes) hydrocarbon concentration, C_{HCf} and the final methanol level for use in calculating evaporative losses (*see* § 86.1243). This operation completes the evaporative emission measurement procedure.

(o) *Alternate method for methanol sampling.* Since sample times of longer than four minutes may be necessary in order to collect an adequate and representative sample of methanol at the end of a test (when SHED concentrations are usually increasing rapidly), it may be necessary to rapidly collect the methanol sample in a bag and then bubble the bag sample through the impingers at the specified flow rate. The time elapsed between collection of the bag sample and flowing through the impingers should be minimized in order to prevent any losses. This alternative must be adopted if the four minute sample period is inadequate to collect a sample of sufficient concentration to allow accurate GC analysis.

[54 FR 14569, Apr. 11, 1989, as amended at 58 FR 16061, Mar. 24, 1993; 60 FR 43906, Aug. 23, 1995]

§ 86.1238–96 Hot soak test.

(a)(1) *Gasoline- and methanol-fueled vehicles.* For gasoline- and methanol-fueled vehicles, the hot soak test shall be conducted immediately following the running loss test. However, sampling of emissions from the running loss test is not required as preparation for the hot soak test.

(2) *Gaseous-fueled vehicles.* Since gaseous-fueled vehicles are not required to perform a running loss test, the hot soak test shall be conducted within seven minutes after completion of the hot start exhaust test.

(b) The hot soak test may be conducted in the running loss enclosure as a continuation of that test or in a separate enclosure.

(1) If the hot soak test is conducted in the running loss enclosure, the driver may exit the enclosure after the running loss test. If exiting, the driver should use the personnel door described in § 86.1207–96(a)(2), exiting as quickly as possible with a minimum disturbance to the system. The final hydrocarbon and methanol concentration for the running loss test, measured in § 86.1234–96(g)(1)(xx), shall be the initial hydrocarbon and methanol concentration (time=0 minutes) C_{HCi} and C_{CH_3OHi}, for the hot soak test.

(2) If the vehicle must be moved to a different enclosure, the following steps must be taken:

(i) The enclosure for the hot soak test shall be purged for several minutes prior to completion of the running loss test. WARNING: If at any time the concentration of hydrocarbons, of methanol, or of methanol and hydrocarbons exceeds 15,000 ppm C the enclosure should be immediately purged. This concentration provides at least a 4:1 safety factor against the lean flammability limit.

(ii) The FID hydrocarbon analyzer shall be zeroed and spanned immediately prior to the test.

(iii) Fresh impingers shall be installed in the methanol sample collection system immediately prior to the start of the test, if applicable.

(iv) If not already on, the mixing fan(s) shall be turned on at this time. Throughout the hot soak test, the mixing fan(s) shall circulate the air at a rate of 0.8±0.2 cfm per cubic foot of the nominal enclosure volume.

(v) Begin sampling as follows:

(A) Analyze the enclosure atmosphere for hydrocarbons and record. This is the initial (time = 0 minutes) hydrocarbon concentration, $C_{HCi,}$ required in § 86.1243. Hydrocarbon emissions may be sampled continuously during the test period.

(B) Analyze the enclosure atmosphere for methanol, if applicable, and record. The methanol sampling must start simultaneously with the initiation of the hydrocarbon analysis and continue for 4.0±0.5 minutes. This is the initial (time=0 minutes) methanol concentration, C_{CH_3OHi}, required in § 86.1243. Record the time elapsed during this analysis. If the 4-minute sample period is inadequate to collect a sample of sufficient concentration to allow accurate GC analysis, rapidly collect the methanol sample in a bag and then bubble the bag sample through the impingers at the specified flow rate. The time elapsed between collection of the bag sample and flow through the impingers should be minimized to prevent any losses.

(vi) The vehicle engine compartment cover shall be closed (if not already closed), the cooling fan shall be moved, the vehicle shall be disconnected from the dynamometer and any sampling system, and then driven at minimum throttle to the enclosure for the hot soak test. These steps should be done as quickly as possible to minimize the time needed to start the hot soak test.

(vii) The vehicle's engine must be stopped before any part of the vehicle enters the enclosure.

(viii) The vehicle shall enter the enclosure; the enclosure doors shall be closed and sealed within 2 minutes of engine shutdown and within seven minutes after the end of the running loss test.

(ix) The test vehicle windows and any luggage compartments shall be opened (if not already open). The vehicle engine compartment cover shall be closed (if not already closed).

(c) [Reserved]

(d) The temperature recording system shall be started and the time of engine shutoff shall be noted on the evaporative emission hydrocarbon data recording system.

(e) For the first 5 minutes of the hot soak test, the ambient temperature shall be maintained at 95±10 °F. For the remainder of the hot soak test, the ambient temperature shall be maintained at 95±5 °F (95±2 °F on average).

(f) The 60±0.5 minute hot soak begins when the enclosure doors are sealed (or when the running loss test ends, if the hot soak test is conducted in the running loss enclosure).

(g) The FID (or HFID) hydrocarbon analyzer shall be zeroed and spanned immediately prior to the end of the test.

(h) Fresh impingers shall be installed in the methanol collection system immediately prior to the end of the test, if applicable.

(i) [Reserved]

(j) At the end of the 60±0.5 minute test period:

(1) Analyze the enclosure atmosphere for hydrocarbons and record. This is the final (time=60 minutes) hydrocarbon concentration, C_{HCf}, required in § 86.1243.

(2) Analyze the enclosure atmosphere for methanol and record, if applicable. The methanol sampling must start simultaneously with the initiation of the hydrocarbon analysis and continue for 4.0±0.5 minutes. This is the final (time=60 minutes) methanol concentration, C_{CH_3OHf}, required in § 86.1243. Record the time elapsed during this analysis. If the 4-minute sample period is inadequate to collect a sample of sufficient concentration to allow accurate GC analysis, rapidly collect the methanol sample in a bag and then bubble the bag sample through the impingers at the specified flow rate. The time elapsed between collection of the bag sample and flow through the

impingers should be minimized to prevent any losses.

(k) For the supplemental two-diurnal test sequence (see § 86.1230–96), the hot soak test described in § 86.1238–90 shall be conducted immediately following the dynamometer run. This test requires ambient temperatures between 68° and 86 °F at all times. The equipment and calibration specifications of §§ 86.1207–90 and 86.1207–90 may apply for this testing. Enclosures meeting the requirements of §§ 86.1207–96 and 86.1217–96 may also be used. This hot soak test is followed by two consecutive diurnal heat builds, described in § 86.1233–96(p).

(l) If the vehicle is to be tested for diurnal emissions, follow the procedure outlined in § 86.1233–96.

[58 FR 16061, Mar. 24, 1993, as amended at 59 FR 48524, Sept. 21, 1994; 60 FR 43906, Aug. 23, 1995]

§ 86.1242–90 Records required.

The following information shall be recorded with respect to each test:

(a) Test number.

(b) System or device tested (brief description).

(c) Date and time of day for each part of the test schedule.

(d) Instrument operator.

(e) Driver or operator.

(f) Vehicle: ID number; Manufacturer; Model Year; Engine family; Evaporative emissions family; Basic engine description (including displacement, number of cylinders, and catalyst usage); Engine maximum power rating and rated speed; Fuel system (including number of carburetors, number of carburetor barrels, fuel injection type, fuel tank(s) capacity and location, and number and size (volume and working capacity)) of evaporative control canisters, Engine code; Gross vehicle weight rating; Actual curb weight at zero miles; Actual road load at 50 mph; Transmission configuration; Axle ratio; Vehicle line; Odometer reading; Idle rpm; and Drive wheel tire pressure, as applicable.

(g) Indicated road load power absorption at 50 mph (80 km/hr) and dynamometer serial number. As an alternative to recording the dynamometer serial number, a reference to a vehicle test cell number may be used, provided the test cell records show the pertinent information.

(h) All pertinent instrument information such as tuning, gain, serial number, detector number and range. As an alternative, a reference to a vehicle test cell number may be used, with the advance approval of the Administrator, provided test cell calibration records show the pertinent instrument information.

(i) Recorder charts: Identify zero, span and enclosure gas sample traces.

(j) Test cell barometric pressure and ambient temperature.

NOTE: A central laboratory barometer may be used: *Provided,* That individual test cell barometric pressures are shown to be within ±0.1 percent of the barometric pressure at the central barometer location.

(k) Fuel temperatures as prescribed.

(l) *For methanol-fueled vehicles:* (1) Volume of sample passed through the methanol sampling system and the volume of deionized water in each impinger.

(2) The concentration of the GC analyses of the test samples (methanol).

(m) *For natural gas-fueled vehicles.* Composition, including all carbon containing compounds; e.g. CO_2, of the natural gas-fuel used during the test. C_1 and C_2 compounds shall be individually reported. C_3 and heavier hydrocarbons, and C_6 and heavier hydrocarbons may be reported as a group.

(n) *For liquefied petroleum gas-fueled vehicles.* Composition of the liquefied petroleum gas-fuel used during the test. Each hydrocarbon compound present, through C_4 compounds, shall be individually reported. C_5 and heavier hydrocarbons may be reported as a group.

[54 FR 14570, Apr. 11, 1989, as amended at 59 FR 48524, Sept. 21, 1994; 60 FR 34363, June 30, 1995]

§ 86.1243–90 Calculations; evaporative emissions.

(a) The calculation of the net hydrocarbon, methanol and hydrocarbon plus methanol mass change in the enclosure is used to determine the diurnal and hot soak mass emissions. The mass changes are calculated from initial and final hydrocarbon and methanol concentrations in ppm carbon, initial and final enclosure ambient temperatures,

initial and final barometric pressures, and net enclosure volume using the following equations:

(1) For methanol:

$$M_{CH3OH} = V_n \times \frac{T_{Ef}}{\left(V_E \times T_{SHEDf}\right)} \times \left[\left(C_{MS1f} \times AV_{1f}\right) + \left(C_{MS2f} \times AV_{2f}\right)\right] - \frac{T_{Ei}}{\left(V_E \times T_{SHEDi}\right)} \times \left[\left(C_{MS1i} \times AV_{1i}\right) + \left(C_{MS2i} \times AV_{2i}\right)\right]$$

Where:

(i) M_{CH3OH}=Methanol mass change, μg.

(ii) V_n=Net enclosure volume, ft³, as determined by subtracting 50 ft³ (1.42 m³) (volume of vehicle with trunk and windows open) from the enclosure volume. A manufacturer may use the measured volume of the vehicle (instead of the nominal 50 ft³) with advance approval by the Administrator: *Provided*, the measured volume is determined and used for all vehicles tested by that manufacturer.

(iii) T_E=Temperature of sample withdrawn, °R.

(iv) V_E=Volume of sample withdrawn, ft³.

(v) T_{SHED}=Temperature of SHED, °R

(vi) P_B=Barometric pressure at time of sampling, in. Hg.

(vii) C_{MS}=GC concentration of sample.

(viii) AV=Volume of absorbing reagent in impinger.

(ix) i=Initial sample.

(x) f=Final sample.

(xi) 1=First impinger.

(xii) 2=Second impinger.

(2) For hydrocarbons:

$$M_{HC} = \left(kV_n \times 10^{-4}\right) \frac{\left(C_{HCf} - rC_{CH3OHf}\right)P_{Bf}}{T_f} - \frac{\left(C_{HCi} - rC_{CH3OHi}\right)P_{Bi}}{T_i}$$

Where:

(i) M_{HC}=Hydrocarbon mass change, g.

(ii) C_{HC}=FID hydrocarbon concentration as ppm carbon including FID response to methanol in the sample.

(iii) C_{CH23OH}=Methanol concentration as ppm carbon.

$$= \frac{1.501 \times 10^{-3} \times T}{P_B \times V_E} \times \left[\left(C_{S1} \times AV_1\right) + \left(C_{S2} \times AV_2\right)\right]$$

(iv) V_n = Net enclosure volume ft³ (m³), as determined by subtracting 50 ft³ (1.42 m³) (volume of vehicle with trunk and windows open) from the enclosure volume. A manufacturer may use the measured volume of the vehicle (instead of the nominal 50 ft³) with advance approval by the Administrator: *Provided*, the measured volume is determined and used for all vehicles tested by that manufacturer.

(v) r = FID response factor to methanol.

(vi) P_B = Barometric pressure, in Hg (kPa).

(vii) T = Enclosure temperature, °R(°K).

(viii) i = initial reading.

(ix) f = final reading.

(x) 1 = First impinger.

(xi) 2 = Second impinger.

(xii)(A) k = 0.208 (12 + H/C).

(B) *For SI units,* k = 1.2 (12 + H/C).

Where:

(xiii) H/C = hydrogen carbon ratio.

(A) H/C = 2.33 for diurnal emissions.

(B) H/C = 2.2 for hot soak emissions.

(3) For total evaporative emissions:

Total Evaporative Emissions =

$$\left(M_{HC} + \frac{14.3594 \times 10^6}{32.042} M_{CH_3OH}\right) + \left(M_{HC} + \frac{14.2284 \times 10^6}{33.042} M_{CH_3OH}\right) g.$$

(b) The final reported results shall be computed by summing the individual evaporative emission results determined for the diurnal breathing-loss test, running-loss test and the hot-soak test.

[54 FR 14570, Apr. 11, 1989, as amended at 60 FR 34363, June 30, 1995]

§ 86.1243–96 Calculations; evaporative emissions.

(a) The following equations are used to calculate the evaporative emissions from gasoline- and methanol-fueled vehicles, and for gaseous-fueled vehicles.

(b) Use the measurements of initial and final concentrations to determine the mass of hydrocarbons and methanol emitted. For testing with pure gasoline, methanol emissions are assumed to be zero.

(1) For enclosure testing of diurnal, hot soak, and running loss emissions:

(i) Methanol emissions:

$$M_{CH_3OH} = V_n \times \left[\frac{(C_{MS1f} \times AV_{1f}) + (C_{MS2f} \times AV_{2f})}{V_{E_f}}\right] - \left[\frac{(C_{MS1i} \times AV_{1i}) + (C_{MS2i} \times AV_{2i})}{V_{E_i}}\right] + (M_{CH_3OH,out} - M_{CH_3OH,in})$$

Where:

(A) M_{CH23OH}=Methanol mass change, μ g.

(B) VF_n=Net enclosure volume, ft³, as determined by subtracting 50 ft³ (1.42 m³) (volume of vehicle with trunk and windows open) from the enclosure volume. A manufacturer may use the measured volume of the vehicle (instead of the nominal 50 ft³) with advance approval by the Administrator: Provided, the measured volume is determined and used for all vehicles tested by that manufacturer.

(C) [Reserved]

(D) V_E=Volume of sample withdrawn, ft³. Sample volumes must be corrected for differences in temperature to be consistent with determination of V_n, prior to being used in the equation.

(E) [Reserved]

(F) AC_{MS}=GC concentration of sample.

(G) AV=Volume of absorbing reagent in impinger.

(H) P_B=Barometric pressure at time of sampling, in. Hg.

(I) i=Initial sample.

(J) f=Final sample.

(K) 1=First impinger.

(L) 2=Second impinger.

(M) $M_{CH3OH,out}$=mass of methanol exiting the enclosure, in the case of fixed volume enclosures for diurnal emission testing, μ g,

(N) $M_{CH3OH,in}$=mass of methanol entering the enclosure, in the case of fixed volume enclosures for diurnal emission testing, μ g,

(ii) Hydrocarbon emissions:

$$M_{HC} = \left(kV_n \times 10^{-4}\right) \times \left(\frac{\left(C_{HC_f} - rC_{CH_3OH_f}\right)P_{B_f}}{T_f} - \frac{\left(C_{HC_i} - rC_{CH_3OH_i}\right)P_{B_i}}{T_i} \right) + M_{HC,out} - M_{HC,in}$$

Where,

(A) M_{HC}=Hydrocarbon mass change, g.

(B) C_{HC}=FID hydrocarbon concentration as ppm carbon including FID response to methanol (or methane, as applicable) in the sample.

(C) C_{CH3OH}=Methanol concentration as ppm carbon.

$$= \frac{1.501 \times 10^{-3} \times T}{P_B \times V_E} \times \left[\left(C_{S1} \times AV_1\right) + \left(C_{S2} \times AV_2\right)\right]$$

(D) V_n=Net enclosure volume ft³ (m³) as determined by subtracting 50 ft³ (1.42 m³) (volume of vehicle with trunk and windows open) from the enclosure volume. A manufacturer may use the measured volume of the vehicle (instead of the nominal 50 ft³) with advance approval by the Administrator, provided the measured volume is determined and used for all vehicles tested by that manufacturer.

(E) r=FID response factor to methanol.

(F) P_B=Barometric pressure, in Hg (Kpa).

(G) T=Enclosure temperature, °R(°K).

(H) i=initial reading.

(I) f=final reading.

(J) 1=First impinger.

(K) 2=Second impinger.

(L) Assuming a hydrogen to carbon ratio of 2.3:

(*1*) k=2.97; and

(*2*) For SI units, k=17.16.

(M) $M_{HC,out}$=mass of hydrocarbons exiting the enclosure, in the case of fixed-volume enclosures for diurnal emission testing, g.

(N) $M_{HC,in}$=mass of hydrocarbons entering the enclosure, in the case of fixed-volume enclosures for diurnal emission testing, g.

(iii) For variable-volume enclosures, defined in § 86.1207(a)(1)(i), the following simplified form of the hydrocarbon mass change equation may be used:

$$M_{HC} = \left(\frac{kP_B V_n \times 10^{-4}}{T} \right) \times \left[\left(C_{HC_f} - rC_{CH_3OH_f}\right) - \left(C_{HC_i} - rC_{CH_3OH_i}\right)\right]$$

(2) For running loss testing by the point-source method, the mass emissions of each test phase are calculated below, then summed for a total mass emission for the running loss test. If emissions are continuously sampled, the following equations can be used in integral form.

(i) Methanol emissions:

$$M_{CH_3OH} = \rho_{CH_3OH}\, V_{mix} \times \left(C_{CH_3OH,rl} - C_{CH_3OH,d}\right)$$

Where,

(A) M_{CH_3OH}=methanol mass change, μg.

(B) ρ_{CH_3OH}= 37.71 g/ft³, density of pure vapor at 68 °F.

(C) V_{mix}=total dilute sample volume, in ft³, calculated as appropriate for the collection technique used.

(D) $C_{CH_3OH,rl}$=methanol concentration of diluted running loss sample, in ppm carbon equivalent.

(E) $C_{CH_3OH,d}$=methanol concentration of dilution air, in ppm carbon equivalent.

(ii) Hydrocarbon emissions:

$$M_{HC} = \rho_{HC} V_{mix} \times 10^{-6} \left(C_{CH,rl} - C_{HC,d} \right)$$

Where,

(A) M_{HC}=hydrocarbon mass change, g.

(B) ρ_{HC}= 16.88 g/ft³, density of pure vapor at 68 °F (for hydrogen to carbon ratio of 2.3).

(C) V_{mix}=total dilute sample volume, in ft³, calculated as appropriate for the collection technique used.

(D) $C_{HC,rl}$=hydrocarbon concentration of diluted running loss sample, in ppm carbon equivalent.

(E) $C_{HC,d}$=hydrocarbon concentration of dilution air, in ppm carbon equivalent.

(c) Calculate the adjusted total mass emissions for each test segment.

(1)
$$M_{DI} = \left(M_{HC} + \frac{14.3594}{32.042} \times 10^{-6} M_{CH_3OH} \right)_{DI}$$

where M_{DI}=mass emissions from the diurnal emission test (see § 86.1233), g.

(2)
$$M_{HS} = \left(M_{HC} + \frac{14.2284}{32.042} \times 10^{-6} M_{CH_3OH} \right)_{HS}$$

where M_{HS}=mass emissions from the hot soak test (see § 86.1238), g.

(3)
$$M_{RL} = \left(M_{HC} + \frac{14.2284}{32.042} \times 10^{-6} M_{CH_3OH} \right)_{RL}$$

where M_{RL}=mass emissions from the running loss test (see § 86.1234), g.

(d)(1) For the full three-diurnal test sequence, there are two final results to report:

(i) The sum of the adjusted total mass emissions for the diurnal and hot soak tests (M_{DI}+M_{HS}); and

(ii) The adjusted total mass emissions for the running loss test, on a grams per mile basis=M_{RL}/D_{RL}, where D_{RL}=miles driven for the running loss test (see § 86.1234–96(c)(6)).

(2) For the supplemental two-diurnal test sequence, there is one final result to report: the sum of the adjusted total

mass emissions for the diurnal and hot soak tests ($M_{DI}+M_{HS}$), described in §§86.1233–96(p) and 86.1238–96(k), respectively.

[58 FR 16062, Mar. 24, 1993, as amended at 59 FR 48525, Sept. 21, 1994; 60 FR 34364, June 30, 1995; 60 FR 43906, Aug. 23, 1995]

§86.1246–96 Fuel dispensing spitback procedure.

(a) The vehicle is fueled at a rate of 10 gal/min to test for fuel spitback emissions. All liquid fuel spitback emissions that occur during the test are collected in a bag made of a material impermeable to hydrocarbons or methanol. The bag shall be designed and used so that liquid fuel does not spit back onto the vehicle body, adjacent floor, etc., and it must not impede the free flow of displaced gasoline vapor from the orifice of the filler pipe. The bag must be designed to permit passage of the dispensing nozzle through the bag. If the bag has been used for previous testing, sufficient time shall be allowed for the bag to dry out. The dispensing nozzle shall be a commercial model, not equipped with vapor recovery hardware.

(b) Ambient temperature levels encountered by the test vehicle shall be not less than 68 °F nor more than 86 °F. The temperatures monitored during testing must be representative of those experienced by the test vehicle. The vehicle shall be approximately level during all phases of the test sequence to prevent abnormal fuel distribution.

(c) Measure and record the mass of the bag to be used for collecting spitback emissions to the nearest 0.01 gram.

(d) Drain the fuel tank(s) and fill with test fuel, as specified in §86.1213, to 10 percent of the reported nominal fuel tank capacity. The fuel cap(s) shall be installed immediately after refueling.

(e) The vehicle shall be soaked at 80±6 °F (27±3 °C) for a minimum of six hours, then placed, either by being driven or pushed, on a dynamometer and operated through one Heavy-Duty Vehicle Urban Dynamometer Driving Schedule (specified in §86.1215 and appendix I of this part). The test vehicle may not be used to set dynamometer horsepower.

(f) Following the preconditioning drive, the vehicle shall be moved or driven at minimum throttle to the refueling area.

(g) All areas in proximity to the vehicle fuel fill orifice and the dispenser nozzle itself shall be completely dry of liquid fuel.

(h) The fuel filler neck shall be snugly fitted with the vented bag to capture any fuel emissions. The fuel nozzle shall be inserted through the bag into the filler neck of the test vehicle to its maximum penetration. The plane of the nozzle's handle shall be perpendicular to the floor of the laboratory.

(i) The fueling procedure consists of dispensing fuel through a nozzle, interrupted by a series of automatic shutoffs. A minimum of 3 seconds shall elapse between any automatic shutoff and subsequent resumption of dispensing. Dispensing may not be manually terminated, unless the test vehicle has already clearly failed the test. The vehicle shall be fueled according to the following procedure:

(1) The fueling operation shall be started within 4 minutes after the vehicle is turned off and within 8 minutes after completion of the preconditioning drive. The average temperature of the dispensed fuel shall be 65±5 °F (18±3 °C).

(2) The fuel shall be dispensed at a rate of 9.8±0.3 gallons/minute (37.1±1.1 *l*/min) until the automatic shutoff is activated.

(3) If the automatic shutoff is activated before the nozzle has dispensed an amount of fuel equal to 70 percent of the tank's nominal capacity, the dispensing may be resumed at a reduced rate. Repeat as necessary until the nozzle has dispensed an amount of fuel equal to at least 70 percent of the tank's nominal capacity.

(4) Once the automatic shutoff is activated after the nozzle has dispensed an amount of fuel equal to 70 percent of the tank's nominal capacity, the fuel shall be dispensed at a rate of 5±1 gallons/minute (19±4 ℓ/min) for all subsequent dispensing. Dispensing shall be restarted two additional times.

(5) If the nozzle has dispensed an amount of fuel less than 85 percent of the tank's nominal capacity after the two additional dispensing restarts, dispensing shall be resumed, and shall

continue through as many automatic shutoffs as necessary to achieve this level. This completes the fueling procedure.

(j) Withdraw the nozzle from the vehicle and the bag, holding the tip of the nozzle upward to avoid any dripping into the bag.

(k) Within 1 minute after completion of the fueling event, the bag shall be folded to minimize the vapor volume inside the bag. The bag shall be folded as quickly as possible to prevent evaporation of collected emissions.

(l) Within 5 minutes after completion of the fueling event, the mass of the bag and its contents shall be measured and recorded (consistent with paragraph (c) of this section). The bag shall be weighed as quickly as possible to prevent evaporation of collected emissions.

[58 FR 16063, Mar. 24, 1993, as amended at 60 FR 43906, Aug. 23, 1995]

Subpart N—Emission Regulations for New Otto-Cycle and Diesel Heavy-Duty Engines; Gaseous and Particulate Exhaust Test Procedures

AUTHORITY: Secs. 202, 206, 207, 208, 301(a), Clean Air Act as amended 42 U.S.C. 7521, 7524, 7541, 7542, and 7601.

SOURCE: 48 FR 52210, Nov. 16, 1983, unless otherwise noted.

§ 86.1301–90 Scope; applicability.

This subpart contains gaseous emission test procedures for Otto-cycle and diesel heavy-duty engines, and particulate emission test procedures for diesel heavy-duty engines. It applies to 1990 and later model years.

[54 FR 14571, Apr. 11, 1989]

§ 86.1302–84 Definitions.

The definitions in § 86.084–2 apply to this subpart.

§ 86.1303–84 Abbreviations.

The abbreviations in § 86.084–3 apply to this subpart.

§ 86.1304–90 Section numbering; construction.

(a) The model year of initial applicability is indicated by the section number. The two digits following the hyphen designate the first model year for which a section is effective. A section remains effective until superseded.

Example: Section 86.1311–84 applies to the 1984 and subsequent model years until superceded. If a § 86.1311–88 is promulgated it would take effect beginning with the 1988 model year; § 86.1311–84 would apply to model years 1984 through 1987.

(b) A section reference without a model year suffix refers to the section applicable for the appropriate model year.

(c) Unless indicated, all provisions in this subpart apply to both Otto-cycle and diesel heavy-duty engines.

[54 FR 14571, Apr. 11, 1989]

§ 86.1305–90 Introduction; structure of subpart.

(a) This subpart describes the equipment required and the procedures to follow in order to perform exhaust emission tests on Otto-cycle and diesel heavy-duty engines. Subpart A sets forth the testing requirements and test intervals necessary to comply with EPA certification procedures.

(b) Four topics are addressed in this subpart. Sections 86.1306 through 86.1315 set forth specifications and equipment requirements; §§ 86.1316 through 86.1326 discuss calibration methods and frequency; test procedures are listed in §§ 86.1327 through 86.1341; calculation formula are found in § 86.1342; and data requirements are found in § 86.1344.

[54 FR 14571, Apr. 11, 1989]

§ 86.1306–90 Equipment required and specifications; overview.

(a) *Exhaust emission tests.* All engines subject to this subpart are tested for exhaust emissions. Petroleum-fueled, natural gas-fueled, liquefied petroleum gas-fueled and methanol-fueled, Otto-cycle and diesel engines are tested identically with the exception of the systems used to measure hydrocarbon, nitrogen oxide, methanol, formaldehyde and particulate; petroleum-fueled diesel engines require a heated, continuous hydrocarbon detector and a continuous nitrogen oxide detector (§ 86.1310); methanol-fueled engines require a heated hydrocarbon detector, a

methanol detector and a formaldehyde detector; either a heated or a non-heated continuous hydrocarbon detector may be used with natural gas-fueled and liquefied petroleum gas-fueled diesel engines; gasoline-fueled, natural gas-fueled, liquefied petroleum gas-fueled and methanol-fueled Otto-cycle engines are not tested for particulate emissions (§86.1309). Necessary equipment and specifications appear in §§86.1308, 86.1309, 86.1310 and 86.1311.

(b) *Fuel, analytical gas, and engine cycle specifications.* Fuel specifications for exhaust emission testing are specified in §86.1313. Analytical gases are specified in §86.1314. The EPA heavy-duty transient engines cycles for use in exhaust testing are described in §86.1333 and specified in appendix I to this part.

[54 FR 14572, Apr. 11, 1989, as amended at 59 FR 48525, Sept. 21, 1994]

§86.1306–96 Equipment required and specifications; overview.

(a) *Exhaust emission tests.* All engines subject to this subpart are tested for exhaust emissions. Petroleum-, natural gas-, liquefied petroleum gas-, and methanol-fueled Otto-cycle and diesel engines are tested identically with two exceptions. First, the systems used to measure hydrocarbon, nitrogen oxide, methanol, formaldehyde and particulate depend on the type of engine being tested; petroleum-fueled diesel engines require a heated, continuous hydrocarbon detector and a heated, continuous nitrogen oxide detector (see §86.1310); methanol-fueled engines require a heated hydrocarbon detector, a methanol detector and a formaldehyde detector; either a heated or non-heated continuous hydrocarbon detector may be used with natural gas-fueled and liquefied petroleum gas-fueled diesel engines; gasoline-fueled, natural gas-fueled, liquefied petroleum gas-fueled and methanol-fueled Otto-cycle engines are not tested for particulate emissions (see §86.1309). Second, if a gasoline-fueled and methanol-fueled engine is to be used in a vehicle equipped with an evaporative canister, the test engine must have a loaded evaporative canister attached for the exhaust emission test. Necessary equipment and specifications appear in §§86.1308, 86.1309, 86.1310 and 86.1311.

(b) *Fuel, analytical gas, and engine cycle specifications.* Fuel specifications for exhaust emission testing are specified in §86.1313. Analytical gases are specified in §86.1314. The EPA heavy-duty transient engine cycles for use in exhaust testing are described in §86.1333 and specified in appendix I to this part.

[58 FR 16064, Mar. 24, 1993, as amended at 59 FR 48525, Sept. 21, 1994]

§86.1308–84 Dynamometer and engine equipment specifications.

(a) *Engine dynamometer.* The engine dynamometer system must be capable of controlling engine torque and rpm simultaneously over transient cycles. The transient torque and rpm schedules described in §86.1333–84 and specified in appendix I ((f)(i), (2), and (3)) must be followed within the accuracy requirements specified in §86.1341–84. In addition to these general requirements, the engine or dynamometer readout signals for speed and torque shall meet the following accuracy specifications:

(1) Engine speed readout shall be accurate to within ±2 percent of the absolute standard value, as defined in paragraph (d) of this section.

(2) Engine flywheel torque readout shall be accurate to either within ±3 percent of the NBS ''true'' value torque (as defined in paragraph (e) of this section), or the following accuracies:

(i) ±2.5 ft-lbs. of the NBS ''true'' value if the full scale value is 550 ft-lbs. or less.

(ii) ±5 ft-lbs. of the NBS ''true'' value if the full scale value is 1050 ft-lbs. or less.

(iii) ±10 ft.-lbs., of the NBS ''true'' value if the full scale value is greater than 1050 ft.-lbs.

(3) *Option:* Internal dynamometer signals (i.e., armature current, etc.) may be used for torque measurement provided that it can be shown that the engine flywheel torque during the test cycle conforms to the accuracy specifications in paragraph (a) of this section. Such a measurement system must include compensation for increased or decreased flywheel torque due to the armature inertia during accelerations and decelerations in the test cycle.

(b) *Cycle verification equipment.* In order to verify that the test engine has followed the test cycle correctly, the dynamometer or engine readout signals for speed and torque must be collected in a manner that allows a statistical correlation between the actual engine performance and the test cycle (See § 86.1341–84). Normally this collection process would involve conversion of analog dynamometer or engine signals into digital values for storage in a computer. The conversion of dynamometer or engine values (computer or other) that are used to evaluate the validity of engine performance in relation to the test cycle shall be performed in a manner such that:

(1) Speed values used for cycle evaluation are accurate to within 2 percent of the dynamometer or engine flywheel torque readout value.

(2) Engine flywheel torque values used for cycle evaluation are accurate to within 2 percent of the dynamometer or engine flywheel torque readout value.

(c) *Option:* For some systems it may be more convenient to combine the tolerances in paragraphs (a) and (b) of this section. This is permitted if the root mean square method (RMS) is used. The RMS values would then refer to accuracy in relationship to absolute standard or to NBS ''true'' values.

(1) Speed values used for cycle evaluation shall be accurate to within ±2.8 percent of the absolute standard values, as defined in paragraph (d) of this section.

(2) Engine flywheel torque values used for cycle evaluation shall be accurate to within ±3.6 percent of NBS ''true'' values, as determined in paragraph (e) of this section.

(d) *Speed calibration equipment.* A 60-tooth (or greater) wheel in combination with a common mode rejection frequency counter is considered an absolute standard for engine or dynamometer speed.

(e) *Torque calibration equipment.* Two techniques are allowed for torque calibration. Alternate techniques may be used if shown to yield equivalent accuracies. The NBS ''true'' value torque is defined as the torque calculated by taking the product of an NBS traceable weight or force and a sufficiently accurate horizontal lever arm distance, corrected for the hanging torque of the lever arm.

(1) The lever-arm dead-weight technique involves the placement of known weights at a known horizontal distance from the center of rotation of the torque measuring device. The equipment required is:

(i) *Calibration weights.* A minimum of six calibration weights for each range of torque measuring device used are required. The weights must be approximately equally spaced and each must be traceable to NBS weights. Laboratories located in foreign countries may certify calibration weights to local government bureau standards. Certification of weight by state government Bureau of Weights and Measures is acceptable. Effects of changes in gravitational constant at the test site may be accounted for if desired.

(ii) *Lever arm.* A lever arm with a minimum length of 24 inches is required. The horizontal distance from the centerline of the engine torque measurement device to the point of weight application shall be accurate to within ±0.10 inches. The arm must be balanced, or the hanging torque of the arm must be known to within ±0.1 ft-lbs.

(2) The transfer technique involves the calibration of a master load cell (i.e., dynamometer case load cell). This calibration can be done with known calibration weights at known horizontal distances, or by using a hydraulically actuated precalibrated master load cell. This calibration is then transferred to the flywheel torque measuring device. The technique involves the following steps:

(i) A master load cell shall be either precalibrated or be calibrated per paragraph (e)(1)(i) of this section with known weights traceable to NBS, and used with the lever arm(s) specified in paragraph (e)(2)(ii) of this section. The dynamometer should be either running or vibrated during this calibration to minimize static hysteresis.

(ii) A lever arm(s) with a minimum length of 24 inches is (are) required. The horizontal distances from the centerline of the master load cell, to the centerline of the dynamometer, and to the point of weight or force application

shall be accurate to within ±0.10 inches. The arm(s) must be balanced or the net hanging torque of the arm(s) must be known to within ±0.1 ft.-lbs.

(iii) Transfer of calibration from the case or master load cell to the flywheel torque measuring device shall be performed with the dynamometer operating at a constant speed. The flywheel torque measurement device readout shall be calibrated to the master load cell torque readout at a minimum of six loads approximately equally spaced across the full useful ranges of both measurement devices. (Note that good engineering practice requires that both devices have approximately equal useful ranges of torque measurement.) The transfer calibration shall be performed in a manner such that the accuracy requirements of paragraph (a)(2) of this section for the flywheel torque measurement device readout be met or exceeded.

(3) Other techniques may be used if shown to yield equivalent accuracy.

(f) *Diesel engines only.* If direct measurement of mass fuel consumption is chosen as an option in lieu of dilute exhaust CO_2 measurement, the fuel measurement device shall be accurate to within ±2 percent of actual mass fuel flow.

[48 FR 52210, Nov. 16, 1983, as amended at 49 FR 48142, Dec. 10, 1984; 52 FR 47870, Dec. 16, 1987]

§86.1309–90 Exhaust gas sampling system; Otto-cycle engines.

(a)(1) *General.* The exhaust gas sampling system described in this paragraph is designed to measure the true mass of gaseous emissions in the exhaust of either gasoline-fueled, natural gas-fueled, liquefied petroleum gas-fueled or methanol-fueled Otto-cycle engines. In the CVS concept of measuring mass emissions, two conditions must be satisfied; the total volume of the mixture of exhaust and dilution air must be measured, and a continuously proportioned volume of sample must be collected for analysis. Mass emissions are determined from the sample concentration and total flow over the test period.

(2) *Engine exhaust to CVS duct.* For methanol-fueled engines, reactions of the exhaust gases in the exhaust duct connected to the dilution tunnel (for the purposes of this paragraph, the exhaust duct excludes the length of pipe representative of the vehicle exhaust pipe) shall be minimized. This may be accomplished by:

(i) Using a duct of unrestricted length maintained at a temperature below 599 °F (315 °C). (Cooling capabilities as required); or

(ii) Using a smooth wall duct less than five feet long with no required heating (a maximum of two short flexible connectors are allowed under this option); or

(iii) Omitting the duct and performing the exhaust gas dilution function at the engine exhaust manifold, immediately after exhaust aftertreatment systems, or after a length of pipe representative of the vehicle exhaust pipe; or

(iv) Partial dilution of the exhaust gas prior to entering the dilution tunnel, which lowers the duct temperature below 599 °F (315 °C).

(3) *Positive displacement pump.* The Positive Displacement Pump Constant Volume Sampler (PDP–CVS), Figure N90–1 satisfies the first condition by metering at a constant temperature and pressure through the pump. The total volume is measured by counting the revolutions made by the calibrated positive displacement pump. The proportional samples for the bag sample, the methanol sample (Figure N90–2), and the formaldehyde sample (Figure N90–3), as applicable are achieved by sampling at a constant flow rate. For methanol-fueled engines, the sample lines for the methanol and formaldehyde samples are heated to prevent condensation. (Note: For 1990 through 1994 model year methanol-fueled engines, methanol and formaldehyde sampling may be omitted provided the bag sample (hydrocarbons and methanol) is analyzed using a HFID calibrated with methanol.)

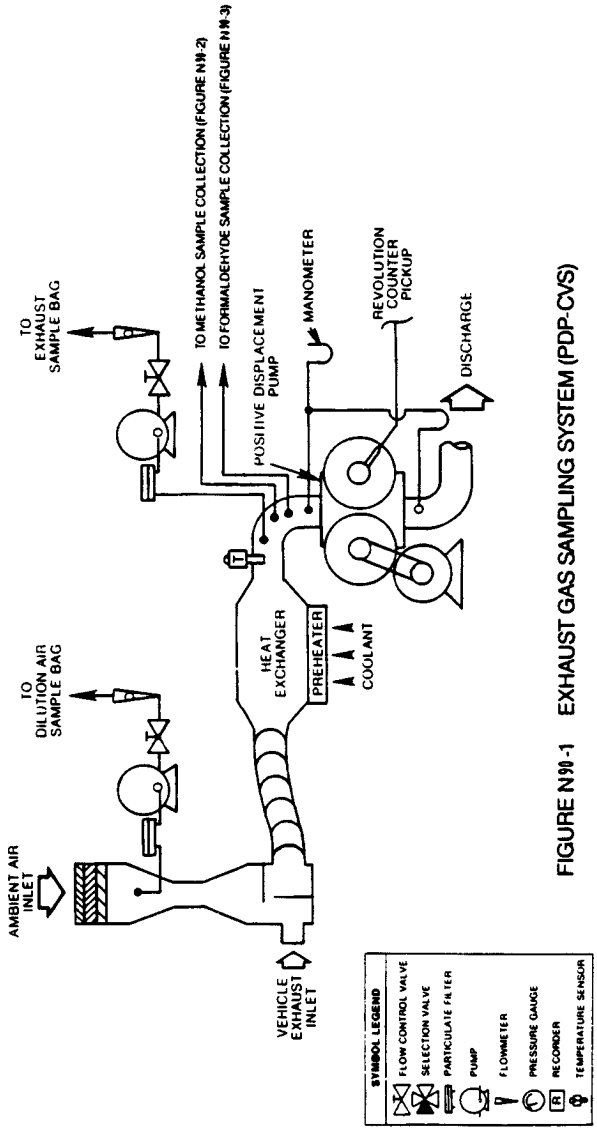

FIGURE N90-1 EXHAUST GAS SAMPLING SYSTEM (PDP-CVS)

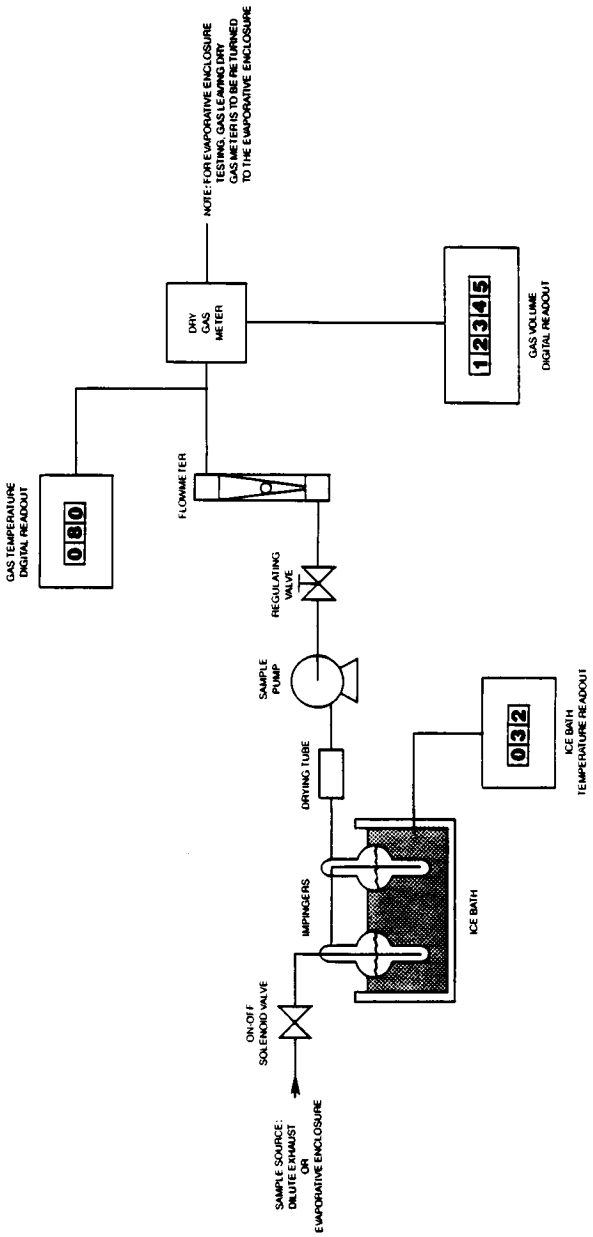

FIGURE N90-2 METHANOL SAMPLE COLLECTION FLOW SYSTEM

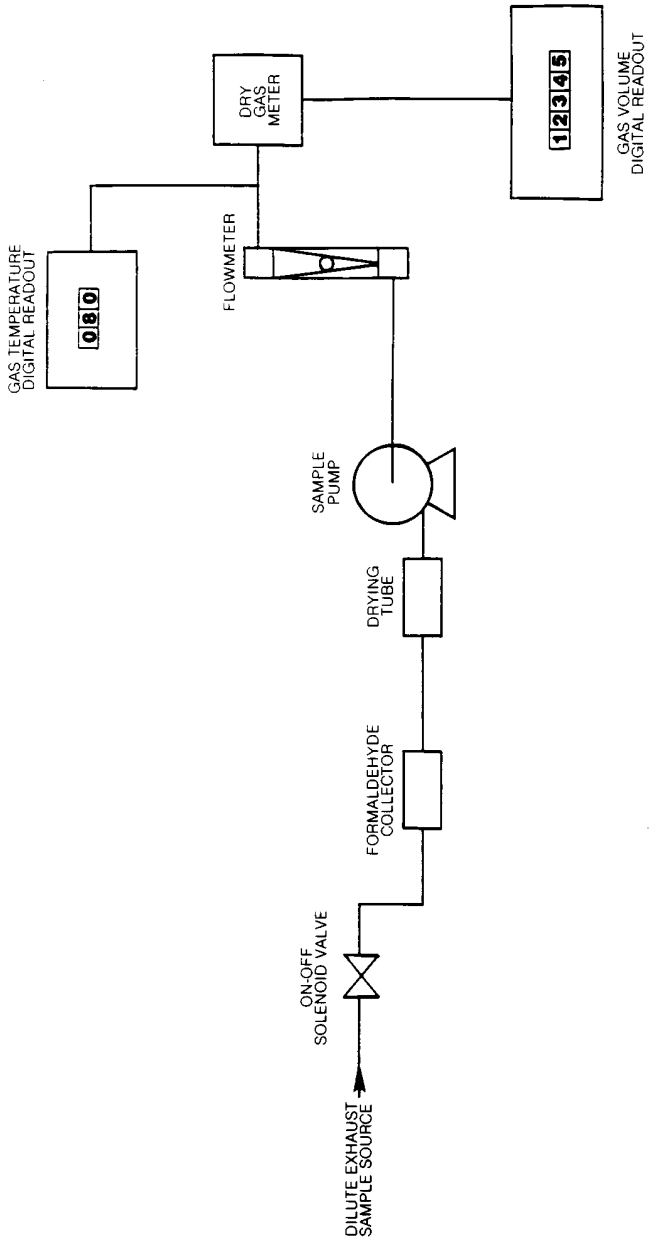

FIGURE N90-3 FORMALDEHYDE SAMPLE COLLECTION FLOW SCHEMATIC

(4) *Critical flow venturi.* The operation of the Critical Flow Venturi Constant Volume Sampler (CFV–CVS), Figure N90–4 is based upon the principles of fluid dynamics associated with critical flow. The CFV system is commonly called a constant volume system (CVS) even though the flow varies. It would

be more proper to call the critical flow venturi (CFV) system a constant proportion sampling system since proportional sampling throughout temperature excursions is maintained by use of a small CFVs in the sample lines. For engines requiring measurement of methanol and/or formaldehyde, one line supplies sample for the bag sample, another line supplies sample for the methanol sample, and a third line supplies sample for the formaldehyde sample. The lines for the methanol and formaldehyde samples are heated to prevent condensation with care being taken to ensure that the CFVs of the sample probes are not heated. (Note: For 1990 through 1994 model year methanol-fueled engines, methanol and formaldehyde sampling may be omitted provided the bag sample (hydrocarbons and methanol) is analyzed using a HFID calibrated with methanol. The variable mixture flow rate is maintained at choked flow, which is inversely proportional to the square root of the gas temperature, and is computed continuously. Since the pressure and temperature are the same at all venturi inlets, the sample volume is proportional to the total volume.)

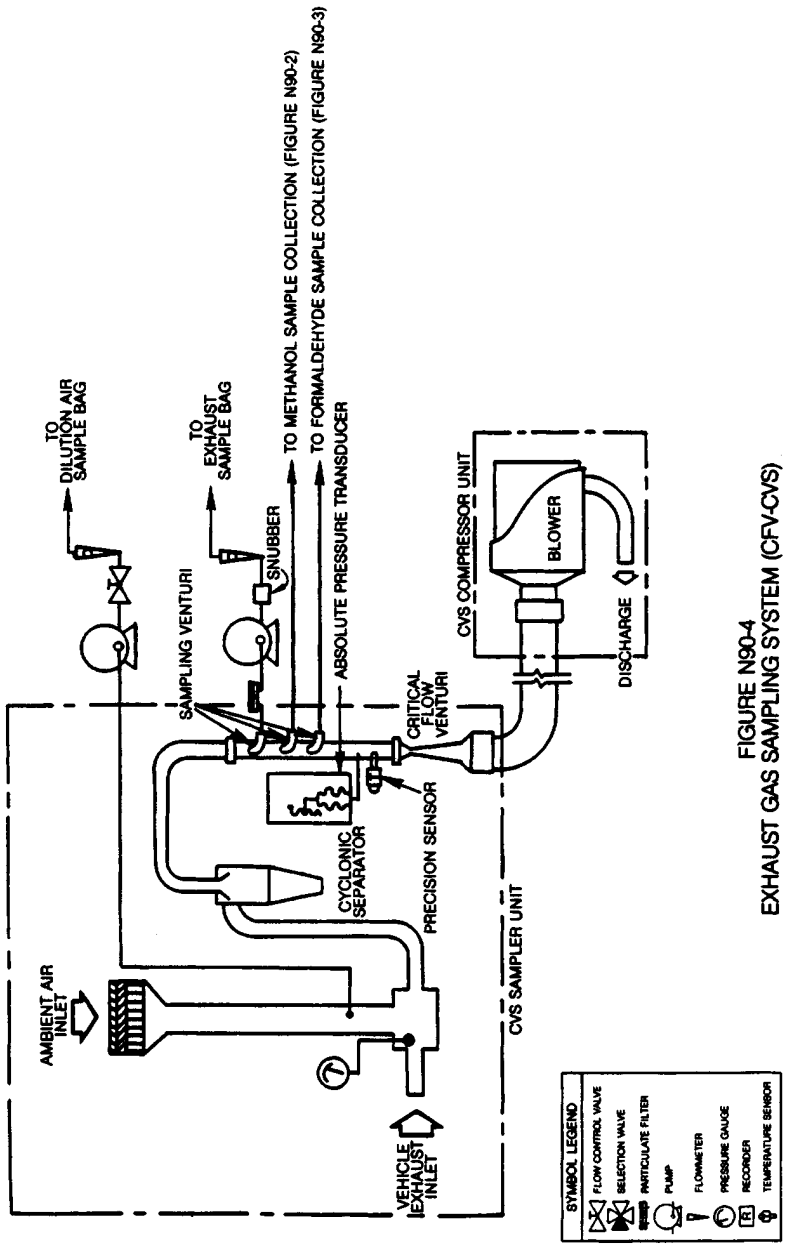

FIGURE N90-4
EXHAUST GAS SAMPLING SYSTEM (CFV-CVS)

(5) *Electronic Flow Control.* The Electronic Flow Control Critical Flow Venturi Constant Volume Sampler (EFC–CFV–CVS) is identical to the CFV–CVS system, except that it uses electronic mass flow meters to maintain proportional sampling for methanol and

formaldehyde. The flow rate of the exhaust plus dilution air and the sample flow rate are measured electronically. Proportionality is maintained by electronically controlled metering valves in the methanol and formaldehyde sample lines. Control of the valves is based on the electronic response of the flow meters. It is recommended that total flow sample volumes be measured by separate flow meters. For methanol-fueled engines, one line supplies sample for the bag sample, another line supplies sample for the methanol sample, and a third line supplies sample for the formaldehyde sample. The sample lines for methanol and for formaldehyde may both draw samples from a single static probe. The lines for the methanol and formaldehyde samples are heated to prevent condensation.

(6) *Other systems.* Other sampling and/or analytical systems including the systems described in § 86.1310 for petroleum-fueled diesel engines may be used if shown to yield equivalent results, and if approved in advance by the Administrator.

(7) Since various configurations can produce equivalent results, exact conformance with these drawings is not required. Additional components such as instruments, valves, solenoids, pumps and switches may be used to provide additional information and coordinate the functions of the component systems. Other components such as snubbers, which are not needed to maintain accuracy on some systems, may be excluded if their exclusion is based upon good engineering judgment.

(b) *Component description,* PDP–CVS. The PDP–CVS, Figure N90–1, consists of a dilution air filter and mixing assembly, heat exchanger, positive displacement pump, sampling systems (see Figure N90–2 for methanol sampling system and Figure N90–3 for formaldehyde sampling system) including sampling lines which are heated to prevent condensation in the case of the methanol-fueled engine, and associated valves, pressure and temperature sensors. The temperature of the sample lines shall be more than 5 °F (3 °C) above the maximum dew point of the mixture and less than 250 °F (121 °C). (It is recommended the they be maintained at 235± 15 °F (113 ±8 °C)). Heating of the sample lines may be omitted, provided the methanol and formaldehyde sample collection systems are close coupled to the probes thereby preventing loss of sample due to cooling and resulting condensation in the sample lines. The PDP–CVS shall conform to the following requirements:

(1) Exhaust system backpressure must not be artificially lowered by the CVS or dilution air inlet system. Measurements to verify this should be made in the raw exhaust immediately upstream of the inlet to the CVS. (For diesel engines, this measurement should be made immediately upstream of the backpressure set device.) This verification requires the continuous measurement and comparison of raw exhaust static pressure observed during a transient cycle, both with and without the operating CVS. Static pressure measured with the operating CVS system shall remain within ±5 inches of water (1.2 kPa) of the static pressure measured without connection to the CVS, at identical moments in the test cycle. (Sampling systems capable of maintaining the static pressure to within ±1 inch of water (0.25 kPa) will be used by the Administrator if a written request substantiates the need for this closer tolerance.) This requirement is essentially a design specification for the CVS/dilution air inlet system, and should be performed as often as good engineering practice dictates (*e.g.,* after installation of an uncharacterized CVS, addition of an unknown inlet restriction on the dilution air, etc.).

(2) The gas mixture temperature, measured at a point immediately ahead of the positive displacement pump and after the heat exchanger, shall be maintained within ±10 °F (±5.6 °C) of the average operating temperature observed during the test. (The average operating temperature may be estimated from the average operating temperature from similar tests.) The temperature measuring system (sensors and readout) shall have an accuracy and precision of ±3.4 °F (1.9 °C).

(3) The pressure gauges shall have an accuracy and precision of ±3 mm Hg (0.4 kPa).

(4) The flow capacity of the CVS shall be large enough to eliminate water

condensation in the system. This is especially critical for methanol-fueled engines and may also be of concern with natural gas- and liquefied petroleum gas-fueled engines; see ''Calculation of Emissions and Fuel Economy When Using Alternative Fuels,'' EPA 460/3–83–009. Dehumidifying the dilution air before entering the CVS is allowed. Heating is also allowed, provided:

(i) The air (or air plus exhaust gas) temperature does not exceed 250 °F, or 125 °F if particulate emissions are measured;

(ii) Calculation of the CVS flow rate necessary to prevent water condensation is based on the lowest temperature encountered in the CVS prior to sampling. (It is recommended that the CVS system be insulated when heated dilution air is used.);

(iii) The dilution ratio is sufficiently high to prevent condensation in bag samples as they cool to room temperature.

(5) Sample collection bags for dilution air and exhaust samples shall be of sufficient size so as not to impede sample flow. A single dilution air sample, covering the total test period, may be collected for the determination of methanol and formaldehyde background (where applicable).

(6) The methanol sample collection system and the formaldehyde sample collection system shall each be of sufficient capacity so as to collect samples of adequate size for analysis without significant impact on the volume of dilute exhaust passing through the PDP. The systems shall also comply with the following requirements that apply to the design of the systems, not to individual tests:

(i) The methanol system shall be designed such that, if a test engine emitted the maximum allowable level of methanol (based on all applicable standards) during the first phase of the test, the measured concentration in the primary impinger would exceed either 25 mg/l or a concentration equal to 25 times the limit of detection for the GC analyzer.

(ii) The formaldehyde system shall be designed such that, if a test engine emitted formaldehyde at a rate equal to twenty percent of the maximum allowable level of THCE (i.e., 0.2 g/Bhp-hr for a 1.1 g/Bhp-hr THCE standard), or the maximum formaldehyde level allowed by a specific formaldehyde standard, whichever is less, during the first phase of the test, the concentration of formaldehyde in the DNPH solution of the primary impinger, or solution resulting from the extraction of the DNPH cartridge, shall exceed either 2.5 mg/l or a concentration equal to 25 times the limit of detection for the HPLC analyzer.

(iii) The methanol and formaldehyde systems shall be designed such that the primary impinger collects at least 90 percent of the analyte in the samples. The remaining analyte shall be collected by the secondary impinger. Sampling systems shall be identical for all phases.

(c) *Component description, CFV.* The CFV sample system, Figure N90–4, consists of a dilution air filter (optional) and mixing assembly, cyclone particulate separator (optional), unheated sampling venturies for the bag, methanol and formaldehyde samples, as applicable, heated sample lines to prevent condensation in the case of the methanol-fueled engine, critical flow venturi, and associated valves, pressure and temperature sensors. The temperature of the sample lines shall be more than 5 °F (3 °C) above the maximum dew point of the mixture and less than 250 °F (121 °C). (It is recommended the they be maintained at 235 ±15 °F (113 ± 8 °C)). Heating of the sample lines may be omitted, provided the methanol and formaldehyde sample collection systems are close coupled to the probes thereby preventing loss of sample due to cooling and resulting condensation in the sample lines. The CFV sample system shall conform to the following requirements:

(1) Static pressure variations in the raw exhaust shall conform to the specifications detailed in paragraph (b)(1) of this section.

(2) The temperature measuring system (sensors and readout) shall have an accuracy and precision of ±3.4 °F (±1.9 °C). The temperature measuring system used in a CVS without a heat exchanger shall have a response time of 1.50 seconds to 62.5 percent of a temperature change (as measured in hot silicone oil). There is no response time

requirement for a CVS equipped with a heat exchanger.

(3) The pressure measuring system (sensors and readout) shall have an accuracy and precision of ±3 mm Hg (0.4 kPa).

(4) The flow capacity of the CVS shall be large enough to eliminate water condensation in the system. This is especially critical for methanol-fueled engines and may also be of concern with natural gas- and liquefied petroleum gas-fueled engines; see ''Calculation of Emissions and Fuel Economy When Using Alternative Fuels,'' EPA 460/3–83–009. Dehumidifying the dilution air before entering the CVS is allowed. Heating is also allowed, provided:

(i) The air (or air plus exhaust gas) temperature does not exceed 250 °F, or 125 °F if particulate emissions are measured.

(ii) Calculation of the CVS flow rate necessary to prevent water condensation is based on the lowest temperature encountered in the CVS prior to sampling. (It is recommended that the CVS system be insulated when heated dilution air is used.)

(iii) The dilution ratio is sufficiently high to prevent condensation in bag samples as they cool to room temperature.

(5) Sample collection bags for dilution air and exhaust samples shall be of sufficient size so as not to impede sample flow. A single dilution air sample, covering the total test period, may be collected for the determination of methanol and formaldehyde background (where applicable).

(6) The methanol sample collection system and the formaldehyde sample collection system shall each be of sufficient capacity so as to collect samples of adequate size for analysis without significant impact on the volume of dilute exhaust passing through the CFV. The systems shall also comply with the following requirements that apply to the design of the systems, not to individual tests:

(i) The methanol system shall be designed such that, if a test engine emitted the maximum allowable level of methanol (based on all applicable standards) during the first phase of the test, the measured concentration in the primary impinger would exceed either 25 mg/l or a concentration equal to 25 times the limit of detection for the GC analyzer.

(ii) The formaldehyde system shall be designed such that, if a test engine emitted formaldehyde at a rate equal to twenty percent of the maximum allowable level of THCE (i.e., 0.2 g/Bhp-hr for a 1.1 g/Bhp-hr THCE standard), or the maximum formaldehyde level allowed by a specific formaldehyde standard, whichever is less, during the first phase of the test, the concentration of formaldehyde in the DNPH solution of the primary impinger, or solution resulting from the extraction of the DNPH cartridge, shall exceed either 2.5 mg/l or a concentration equal to 25 times the limit of detection for the HPLC analyzer.

(iii) The methanol and formaldehyde systems shall be designed such that the primary impinger collects at least 90 percent of the analyte in the samples. The remaining analyte shall be collected by the secondary impinger. Sampling systems shall be identical for all phases of the test.

(d) *Component description, EFC–CFV.* The EFC–CFV sample system, is identical to the CFV system described in paragraph (c) of this section, with the addition of electronic flow controllers, metering valves, separate flow meters to totalize sample flow volumes (optional), for methanol and formaldehyde samples. Both samples may be drawn from a single static probe. The EFC sample system shall conform to the following requirements:

(1) All of the requirements of paragraph (c) of this section.

(2) The ratio of sample flow to CVS flow must not vary by more ±5 percent from the setpoint of the test.

(3) The sample flow totalizers shall meet the accuracy specifications of § 86.1320. Total sample flow volumes may be obtained from the flow controllers, with advance approval of the Administrator, provided that they can be shown to meet the accuracy specifications of § 86.1320.

[54 FR 14572, Apr. 11, 1989, as amended at 59 FR 48525, Sept. 21, 1994; 60 FR 34364, June 30, 1995]

§ 86.1310–90 Exhaust gas sampling and analytical system; diesel engines.

(a) *General.* The exhaust gas sampling system described in this paragraph is designed to measure the true mass of both gaseous and particulate emissions in the exhaust of petroleum-fueled, natural gas-fueled, liquefied petroleum gas-fueled and methanol-fueled heavy-duty diesel engines. This system utilizes the CVS concept (described in § 86.1309) of measuring the combined mass emissions of HC, CH_3OH and HCHO from methanol-fueled engines and CO, CO_2 and particulate from all fuel types. A continuously integrated system is required for THC (petroleum-fueled, natural gas-fueled, and liquefied petroleum gas-fueled engines) and NO_X (all engines) measurement, and is allowed for all CO and CO_2 measurements plus the combined emissions of CH_3OH, HCHO, and HC from methanol-fueled engines. Where applicable, separate sampling systems are required for methanol and for formaldehyde. The mass of gaseous emissions is determined from the sample concentration and total flow over the test period. The mass of particulate emissions is determined from a proportional mass sample collected on a filter and from the sample flow and total flow over the test period. As an option, the measurement of total fuel mass consumed over a cycle may be substituted for the exhaust measurement of CO_2. General requirements are as follows:

(1) This sampling system requires the use of a PDP–CVS and a heat exchanger, a CFV–CVS (or an EFC–CFV–CVS) with either a heat exchanger or electronic flow compensation. Figure N90–5 is a schematic drawing of the PDP system. Figure N90–6 is a schematic drawing of the CFV–CVS system.

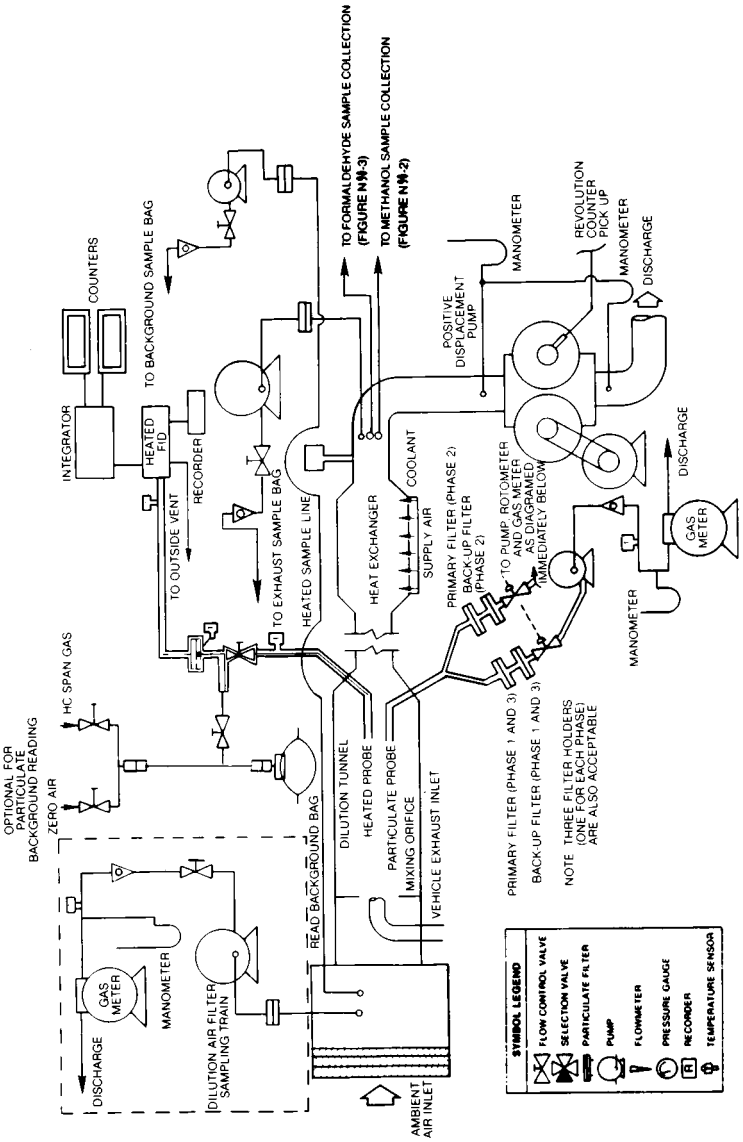

FIGURE N 9-5
GASEOUS AND PARTICULATE EMISSIONS SAMPLING SYSTEM (PDP-CVS)

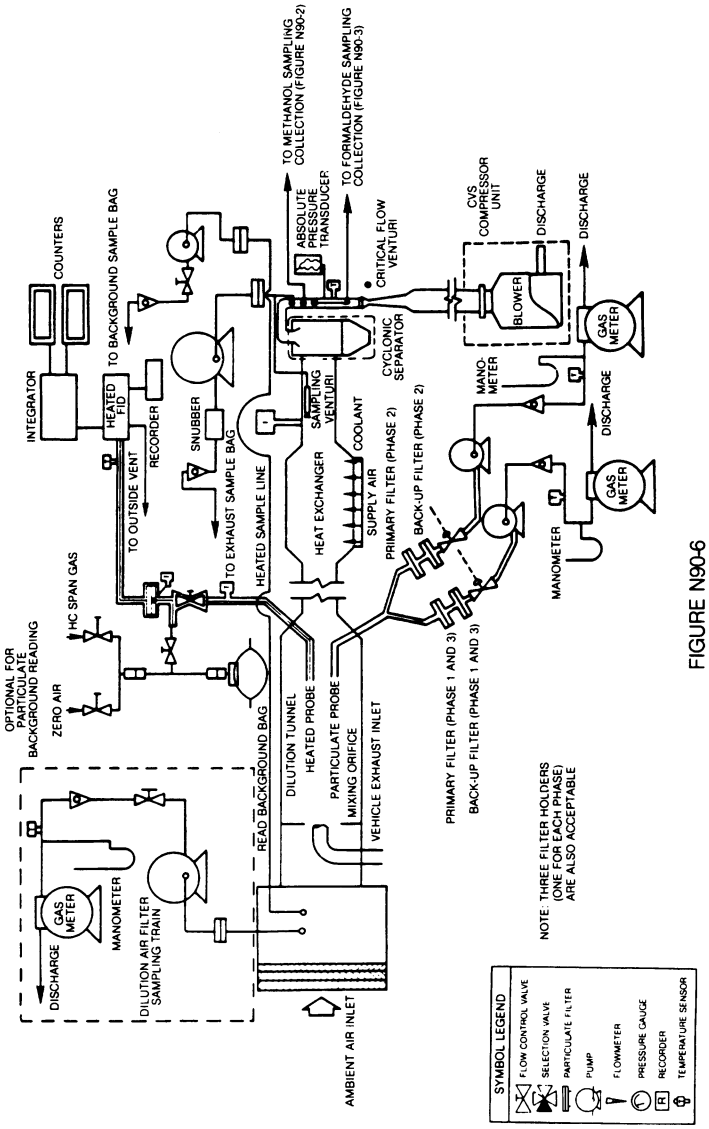

FIGURE N90-6
GASEOUS AND PARTICULATE EMISSIONS SAMPLING SYSTEM (CFV-CVS)

(2) The HC analytical system for petroleum-fueled diesel engines requires a heated flame ionization detector (HFID) and heated sample system (375 ±20 °F (191 ±11 °C)). For natural gas-fueled and liquefied petroleum gas-fueled diesel engines either a heated flame ionization detector and heated sample system as required for petroleum fuel or a non-heated flame ionization detector may be used.

(3) Methanol-fueled engines require the use of a heated flame ionization detector (HFID) (235°±15 °F (113°±8 °C)) for hydrocarbon analysis. With a heated FID, the hydrocarbon analysis can be made on the bag sample and the methanol and formaldehyde analyses are

performed on the samples collected for these purposes (Figures N90–2 and N90–3).

NOTE: For 1990 through 1994 model year methanol-fueled engines, methanol and formaldehyde sampling may be omitted provided the hydrocarbon plus methanol analyses are performed using a FID calibrated on methanol.

(4) For methanol-fueled engines, cooling or reaction of the exhaust gases in the exhaust duct connected to the dilution tunnel (for the purposes of this paragraph, the exhaust duct excludes the length of pipe representative of the vehicle exhaust pipe) shall be minimized. This may be accomplished by:

(i) Using a duct of unrestricted length maintained at a temperature below 599 °F (315 °C). (Heating and possibly cooling capabilities as required); or

(ii) Using a smooth wall duct less than five feet long with no required heating (a maximum of two short flexible connectors are allowed under this option); or

(iii) Omitting the duct and performing the exhaust gas dilution function at the engine exhaust manifold or immediately after exhaust aftertreatment systems, or after a length of pipe representative of the vehicle exhaust pipe; or

(iv) Partial dilution of the exhaust gas prior to entering the dilution tunnel, which lowers the duct temperature below 599 °F (315 °C).

(5) Heated sample lines are required for the methanol and formaldehyde samples (care must be taken to prevent heating of the sample probes unless compensation for varying flow rate is made). The sample collection lines shall be heated to a temperature more than 5 °F (3 °C) above the maximum dew point of the mixture, but below 250 °F (121 °C).

(6) The CO and CO_2 analytical system requires:

(i) Bag sampling (§ 86.1309) and analytical (§ 86.1311) capabilities, as shown in Figure N90–5 (or Figure N90–6), or

(ii) Continuously integrated measurement of diluted CO and CO_2 meeting the minimum requirements and technical specifications contained in paragraph (b)(5) of this section. Unless compensation for varying flow is made, a constant flow system must be used to ensure a representative sample.

(7) The NO_X analytical system requires a continuously integrated measurement of diluted NO_X meeting the minimum requirements and technical specifications contained in paragraph (b)(5) of this section. Unless compensation for varying flow is made, a constant flow system must be used to ensure a representative sample.

(8) The mass of particulate in the exhaust is determined via filtration. The particulate sampling system requires dilution of the exhaust in either one or two steps to a temperature never greater than 125 °F (51.7 °C) at the primary sample filter. A backup filter provides a confirmation of sufficient filtering efficiency.

(9) Since various configurations can produce equivalent results, exact conformance with these drawings is not required. Additional components such as instruments, valves, solenoids, pumps, and switches may be used to provide additional information and coordinate the functions of the component systems. Other components, such as snubbers, which are not needed to maintain accuracy on some systems, may be excluded if their exclusion is based upon good engineering judgment.

(10) Other sampling and/or analytical systems may be used if shown to yield equivalent results and if approved in advance by the Administrator.

(b) *Component description.* The components necessary for exhaust sampling shall meet the following requirements:

(1) *Exhaust dilution system.* The PDP–CVS shall conform to all of the requirements listed for the exhaust gas PDP–CVS in § 86.1309(b). The CFV–CVS shall conform to all of the requirements listed for the exhaust gas CFV–CVS in § 86.1309(c). The EFC–CFV–CVS shall conform to all of the requirements listed for the exhaust gas EFC–CVS in § 86.1309(d). In addition, the CFV–CVS and EFC–CFV–CVS must conform to the following requirements:

(i) The flow capacity of the CVS must be sufficient to maintain the diluted exhaust stream at or below the temperatures required for the measurement of particulate and hydrocarbon emission noted below and at, or above,

the temperatures where condensation of water in the exhaust gases could occur. This may be achieved by either of the following two methods:

(A) *Single-dilution method.* The flow capacity of the CVS must be sufficient to maintain the diluted exhaust stream at a temperature of 125 °F (51.7 °C) or less, at the sampling zone in the primary dilution tunnel and as required to prevent condensation at any point in the dilution tunnel. Direct sampling of the particulate material may then take place (Figure N90–5).

(B) *Double-dilution method.* The flow capacity of the CVS must be sufficient to maintain the diluted exhaust stream in the primary dilution tunnel at a temperature of 375 °F (191 °C) (250 °F (121 °C) for methanol fueled engines) or less at the sampling zone and as required to prevent condensation at any point in the dilution tunnel. Gaseous emission samples may be taken directly from this sampling point. An exhaust sample must then be taken at this point to be diluted a second time for use in determining particulate emissions. The secondary dilution system must provide sufficient secondary dilution air to maintain the double-diluted exhaust stream at a temperature of 125 °F (51.7 °C) or less immediately before the primary particulate filter in the secondary dilution tunnel.

(ii) For the CFV–CVS or EFC–CFV–CVS, either a heat exchanger or electronic flow compensation (which also includes the particulate sample flows) is required (see Figure N90–6).

(iii) For the CFV–CVS or EFC–CFV–CVS when a heat exchanger is used, the gas mixture temperature, measured at a point immediately ahead of the critical flow venturi, shall be within ±20 °F (±11 °C) of the average operating temperature observed during the test with the simultaneous requirement that condensation does not occur. The temperature measuring system(sensors and readout) shall have an accuracy and precision of ±3.4 °F (1.9 °C). For systems utilizing a flow compensator to maintain proportional sampling, the requirement for maintaining constant temperature is not necessary.

(iv) The primary dilution air and secondary dilution air (if applicable):

(A) Shall have a temperature of 77°±9 °F (25°±5 °C). For the first l0 seconds this specification is 77°±20 °F (25°±11 °C).

(B) May be filtered at the dilution air inlet.

(C) Primary dilution air may be sampled to determine background particulate levels, which can then be subtracted from the values measured in the diluted exhaust stream. The primary dilution air shall be sampled at the inlet to the primary dilution tunnel, if unfiltered, or downstream of any primary dilution air conditioning devices, if used.

(2) [Reserved]

(3) *Continuous HC measurement system.* (i) The continuous HC sample system (as shown in Figure N90–7 or N90–8) uses an ''overflow'' zero and span system. In this type of system, excess zero or span gas spills out of the probe when zero and span checks of the analyzer are made. The ''overflow'' system may also be used to calibrate the HC analyzer per § 86.1321(b), although this is not required.

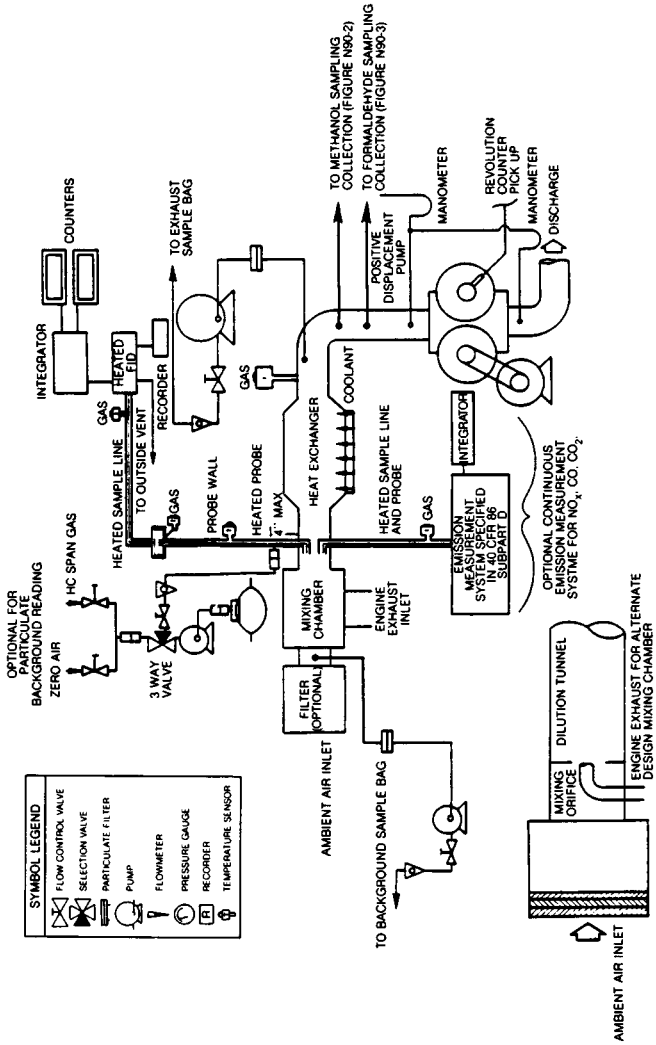

FIGURE N90-7 GASEOUS EMISSIONS SAMPLING SYSTEM (PDP-CVS)

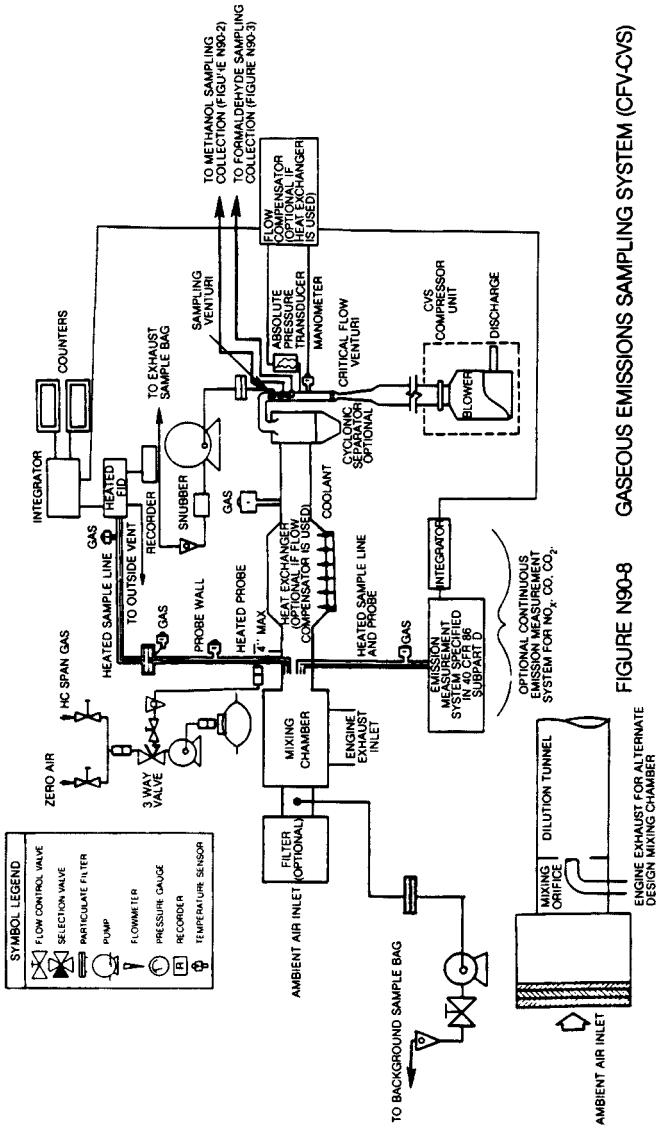

FIGURE N90-8 GASEOUS EMISSIONS SAMPLING SYSTEM (CFV-CVS)

(ii) No other analyzers may draw a sample from the continuous HC sample probe, line or system, unless a common sample pump is used for all analyzers and the sample line system design reflects good engineering practice.

(iii) The overflow gas flow rates into the sample line shall be at least 105 percent of the sample system flow rate.

(iv) The overflow gases shall enter the heated sample line as close as practicable to the outside surface of the CVS duct or dilution tunnel.

(v) The continuous HC sampling system shall consist of a probe (which must raise the sample to the specified temperature) and, where used, a sample transfer system (which must maintain

the specified temperature). The continuous hydrocarbon sampling system (exclusive of the probe) shall:

(A) Maintain a wall temperature of 464K ± 11K (191°C ± 11°C) as measured at every separately controlled heated component (i.e., filters, heated line sections), using permanent thermocouples located at each of the separate components.

(B) Have a wall temperature of 464K ± 11K (191°C ± 11°C) over its entire length. The temperature of the system shall be demonstrated by profiling the thermal characteristics of the system at initial installation and after any major maintenance performed on the system. The temperature profile of the HC sampling system shall be demonstrated by inserting thermocouple wires (typically Teflon® coated for ease of insertion) into the sampling system assembled in-situ where possible, using good engineering judgement. The wire should be inserted up to the HFID inlet. Stabilize the sampling system heaters at normal operating temperatures. Withdraw the wires in increments of 5 cm to 10 cm (2 inches to 4 inches) including all fittings. Record the stabilized temperature at each position. The system temperature will be monitored during testing at the locations and temperature described in §86.1310–90(b)(v)(A). Comment: It is understood that profiling of the sample line can be done under flowing conditions also as required with the probe.

(C) Maintain a gas temperature of 464K ±11K (191°C ±11°C) immediately before the heated filter and HFID. These gas temperatures will be determined by a temperature sensor located immediately upstream of each component.

(vi) The continuous hydrocarbon sampling probe shall:

(A) Be defined as the first 25.4 cm (10 in) to 76.2 cm (30 in) of the continuous hydrocarbon sampling system.

(B) Have a 0.483 cm (0.19 in) minimum inside diameter.

(C) Be installed in the primary dilution tunnel at a point where the dilution air and exhaust are well mixed (i.e., approximately 10 tunnel diameters downstream of the point where the exhaust enters the dilution tunnel).

(D) Be sufficiently distant (radially) from other probes and the tunnel wall so as to be free from the influence of any wakes or eddies.

(E) Increase the gas stream temperature to 464K ±11K (191°C ±11°C) by the exit of the probe. The ability of the probe to accomplish this shall be demonstrated at typical sample flow rates using the insertion thermocouple technique at initial installation and after any major maintenance. Compliance with the temperature specification shall be demonstrated by monitoring during each test the temperature of either the gas stream or the wall of the sample probe at its terminus.

(vii) The response time of the continuous measurement system shall be no greater than:

(A) 1.5 seconds from an instantaneous step change at the port entrance to the analyzer to within 90 percent of the step change.

(B) 20 seconds from an instantaneous step change at the entrance to the sample probe or overflow span gas port to within 90 percent of the step change. Analysis system response time shall be coordinated with CVS flow fluctuations and sampling time/test cycle offsets if necessary.

(C) For the purpose of verification of response times, the step change shall be at least 60 percent of full-scale chart deflection.

(4) *Primary-dilution tunnel.* (i) The primary dilution tunnel shall be:

(A) Small enough in diameter to cause turbulent flow (Reynolds Number greater than 4000) and of sufficient length to cause complete mixing of the exhaust and dilution air;

(B) At least 18 inches (46 cm) in diameter with a single-dilution system or at least 8 inches (20 cm) in diameter with a double-dilution system;

(C) Constructed of electrically conductive material which does not react with the exhaust components; and

(D) Electrically grounded.

(ii) The temperature of the diluted exhaust stream inside of the primary dilution tunnel shall be sufficient to prevent water condensation.

(iii) The engine exhaust shall be directed downstream at the point where it is introduced into the primary dilution tunnel.

(5) *Continuously integrated NO_X, CO, and CO_2 measurement systems.* (i) The sample probe shall:

(A) Be in the same plane as the continuous HC probe, but shall be sufficiently distant (radially) from other probes and the tunnel wall so as to be free from the influences of any wakes or eddies.

(B) Heated and insulated over the entire length, to prevent water condensation, to a minimum temperature of 131 °F (55 °C). Sample gas temperature immediately before the first filter in the system shall be at least 131 °F (55 °C).

(ii) The continuous NO_X, CO, or CO_2 sampling and analysis system shall conform to the specifications of 40 CFR part 86, subpart D, with the following exceptions and revisions:

(A) The system components required to be heated by subpart D need only be heated to prevent water condensation, the minimum component temperature shall be 131 °F (55 °C).

(B) The system response defined in § 86.329–79 shall be no greater than 20 seconds. Analysis system response time shall be coordinated with CVS flow fluctuations and sampling time/test cycle offsets, if necessary.

(C) Alternative NO_X measurement techniques outlined in § 86.346–79 are not permitted for NO_X measurement in this subpart.

(D) All analytical gases shall conform to the specifications of § 86.1314.

(E) Any range on a linear analyzer below 155 ppm shall have and use a calibration curve conforming to § 86.330–79.

(F) The measurement accuracy requirements specified in § 86.338–79 are superseded by those specified in § 86.1338.

(iii) The chart deflections or voltage output of analyzers with non-linear calibration curves shall be converted to concentration values by the calibration curve(s) specified in subpart D (§ 86.330–79) before flow correction (if used) and subsequent integration takes place.

(6) *Particulate sampling system.* The particulate collection system must be configured in either of two ways. The single-dilution method collects a proportional sample from the primary tunnel, and then passes this sample through the collection filter. The double-dilution method collects a proportional sample from the primary tunnel, and then transfers this sample to a secondary dilution tunnel where the sample is further diluted; the double-diluted sample is then passed through the collection filter. Proportionality (i.e., mass flow ratio) between the primary tunnel flow rate and the sample flow rate must be maintained within ±5 percent. The requirements for these two systems are:

(i) *Single dilution method.* (A) The particulate sample probe shall be:

(*1*) Installed facing upstream at a point where the dilution air and exhaust air are well mixed (*i.e.*, on the primary tunnel centerline, approximately 10 tunnel diameters downstream of the point where the exhaust enters the primary dilution tunnel).

(*2*) Sufficiently distant (radially) from other sampling probes so as to be free from the influence of any wakes or eddies produced by the other probes.

(*3*) 0.5 in. (1.3 cm) minimum inside diameter.

(*4*) The distance from the sampling tip to the filter holder shall be at least 5 probe diameters for filters located inside the primary dilution tunnel, and not more than 40 inches (102 cm) for filters located outside the primary dilution tunnel.

(*5*) Designed to minimize the deposition of particulate in the probe (*i.e.*, bends should be as gradual as possible, protrusions (due to sensors, etc.) should be smooth and not sudden, etc.).

(B) The particulate sample pump(s) shall be located sufficiently distant from the dilution tunnel so that the inlet gas temperature is maintained at a constant temperature (±5 °F (±2.8 °C)) if flow compensation is not used.

(C) The gas meters or flow instrumentation shall be located sufficiently distant from the tunnel so that the inlet gas temperature remains constant (±5 °F (±2.8 °C)) if flow compensation is not used.

(D) Other sample flow handling and/or measurement systems may be used if shown to yield equivalent results and if approved in advance by the Administrator.

(ii) *Double-dilution method.* (A) The particulate sample transfer tube shall be configured and installed so that:

(*1*) The inlet faces upstream in the primary dilution tunnel at a point where the primary dilution air and exhaust are well mixed (*i.e.*, on the primary tunnel centerline, approximately 10 tunnel diameters downstream of the point where the exhaust enters the primary dilution tunnel).

(*2*) The particulate sample exits on the centerline of the secondary tunnel and points downstream.

(B) The particulate sample transfer tube shall be:

(*1*) Sufficiently distant (radially) from other sampling probes (in the primary dilution tunnel) so as to be free from the influence of any wakes or eddies produced by the other probes.

(*2*) 0.5 in (1.3 cm) minimum inside diameter.

(*3*) No longer than 36 in (91 cm) from inlet plane to exit plane.

(*4*) Designed to minimize the deposition of particulate during transfer (*i.e.*, bends should be as gradual as possible, protrusions (due to sensors, etc.) should be smooth and not sudden, etc.).

(*5*) Constructed of electrically conductive material which does not react with the exhaust components, and electrically grounded.

(C) The secondary dilution air shall be at a temperature of 77°±9 °F (25°±5 °C). For the first 10 seconds this specification is 77°±20 °F (25°±11 °C).

(D) The secondary-dilution tunnel shall be:

(*1*) 3.0 inches (7.6 cm) minimum inside diameter.

(*2*) Of sufficient length so as to provide a residence time of at least 0.25 seconds for the double-diluted sample.

(*3*) Constructed of electrically conductive material which does not react with the exhaust components, and electrically grounded.

(E) Additional dilution air must be provided so as to maintain a sample temperature of 125 °F (51.7 °C) or less immediately before the primary sample filter.

(F) The primary filter holder shall be located within 12.0 in (30.5 cm) of the exit of the secondary dilution tunnel.

(G) Other sample flow handling and/or measurement systems may be used if shown to yield equivalent results and if approved in advance by the Administrator.

(7) *Particulate sampling filters.* (i) Fluorocarbon-coated glass fiber filters or fluorocarbon-based (membrane) filters are required.

(ii) Particulate filters must have a minimum diameter of 70 mm (60 mm stain diameter). Larger diameter filters are acceptable.

(iii) The dilute exhaust will be simultaneously sampled by a pair of filters (one primary and one back-up filter) during the cold-start test and by a second pair of filters during the hot-start test. The back-up filter holder shall be located no more than 4 inches (10 cm) downstream of the primary filter holder. The primary and back-up filters shall not be in contact with each other.

(iv) It is recommended that the filter loading should be maximized consistent with other temperature requirements and the requirement to avoid moisture condensation. A filter pair loading of 1 mg is typically proportional to a 0.1 g/bhp-hr emission level. All particulate filters, reference filters, and background filters shall be handled in pairs during all weighing operations for emissions testing.

(8) *Methanol sampling system.* The methanol sampling system, shown in Figure N90–2, consists of impingers (or sample collection capsules) containing known volumes of deionized water and sampling pump to draw the proportional sample through the impingers.

(9) *Formaldehyde sampling system.* The formaldehyde sampling system, Figure N90–3, consists of sample collection impingers and sampling pump to draw the proportional sample through the impingers.

[54 FR 14578, Apr. 11, 1989, as amended at 59 FR 48525, Sept. 21, 1994; 60 FR 34370, June 30, 1995; 62 FR 47124, Sept. 5, 1997]

§86.1311–90 Exhaust gas analytical system; CVS bag sample.

(a) *Schematic drawings.* Figure N90–9 is a schematic drawing of the exhaust gas analytical system used for analyzing CVS bag samples from either Otto-cycle or diesel engines. Since various configurations can produce accurate results, exact conformance with the drawing is not required. Additional components such as instruments, valves, solenoids, pumps and switches

may be used to provide additional information and coordinate the functions of the component systems. Other components such as snubbers, which are not needed to maintain accuracy in some systems, may be excluded if their exclusion is based upon good engineering judgment.

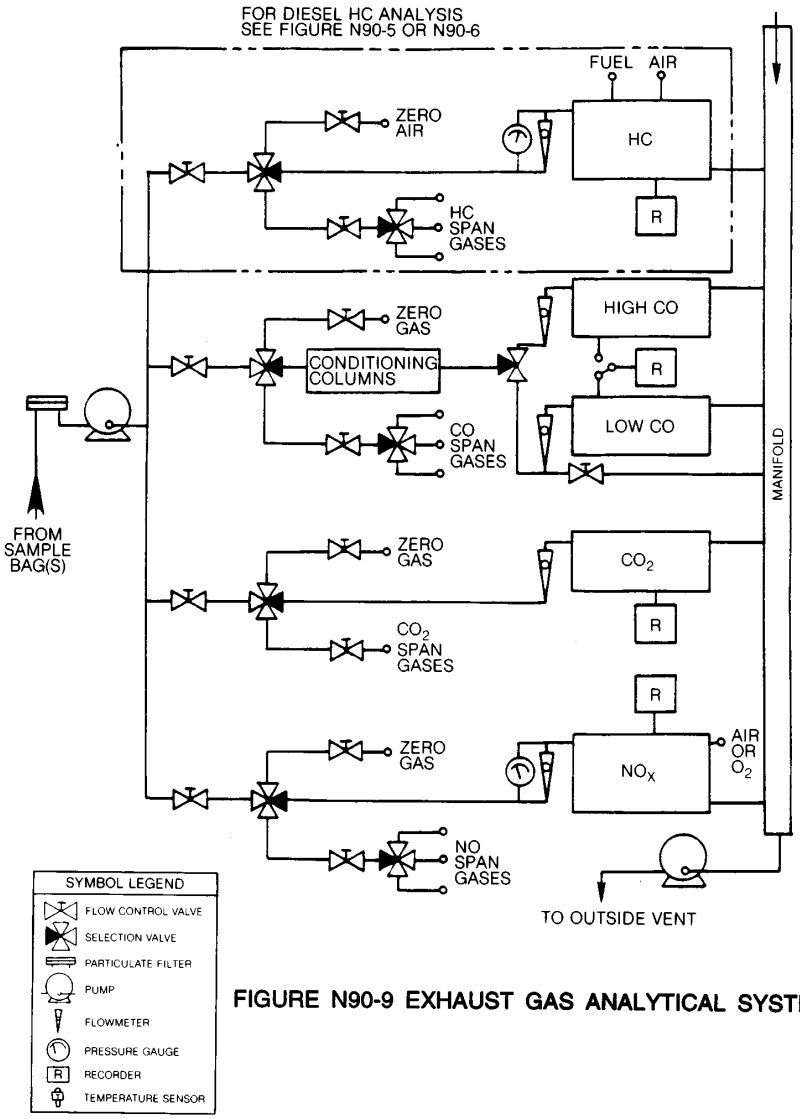

FIGURE N90-9 EXHAUST GAS ANALYTICAL SYSTEM

(b) *Major component description.* The analytical system, Figure N90–9, consists of a flame ionization detector (FID) (heated for methanol-fueled (235±15 °F (113±8 °C)) and for petroleum-

fueled diesel (375 °±10 °F (191 °±6 °C) engines) for the measurement of hydrocarbons, nondispersive infrared analyzers (NDIR) for the measurement of carbon monoxide and carbon dioxide, and a chemiluminescence analyzer (CL) for the measurement of oxides of nitrogen. The analytical system for methanol consists of a gas chromatograph (GC), equipped with a flame ionization detector. The analysis for formaldehyde is performed using high pressure liquid chromatography (HPLC) of 2,4-dinitrophenylhydrazine (DNPH) derivatives using ultraviolet (UV) detection. The exhaust gas analytical system shall conform to the following requirements:

(1) The CL requires that the nitrogen dioxide present in the sample be converted to nitric oxide before analysis. Other types of analyzers may be used if shown to yield equivalent results and if approved in advance by the Administrator.

(2) The carbon monoxide (NDIR) analyzer may require a sample conditioning column containing $CaSO_4$, or dessicating silica gel to remove water vapor, and containing ascarite to remove carbon dioxide from the CO analysis stream.

(i) If CO instruments are used which are essentially free of CO_2 and water vapor interference, the use of the conditioning column may be deleted. (*See* §§86.1322 and 86.1342.)

(ii) A CO instrument will be considered to be essentially free of CO_2 and water vapor interference if its response to a mixture of 3 percent CO_2 in N_2, which has been bubbled through water at room temperature, produces an equivalent CO response, as measured on the most sensitive CO range, which is less than 1 percent of full scale CO concentration on ranges above 300 ppm full scale or less than 3 ppm on ranges below 300 ppm full scale. (*See* §86.1322.)

(c) *Alternate analytical systems.* Analysis systems meeting the specifications of 40 CFR part 86 subpart D may be used for testing required under this subpart, with the exception of §§86.346 and 86.347, provided that the subpart D systems meet the specifications of this subpart. Heated analyzers may be used in their heated configuration.

(d) *Other analyzers and equipment.* Other types of analyzers and equipment may be used if shown to yield equivalent results and if approved in advance by the Administrator.

[54 FR 14578, Apr. 11, 1989]

§86.1311–94 Exhaust gas analytical system; CVS bag sample.

(a) *Schematic drawings.* Figure N94–1 is a schematic drawing of the exhaust gas analytical system used for analyzing CVS bag samples from either Otto-cycle or diesel engines. Since various configurations can produce accurate results, exact conformance with the drawing is not required. Additional components such as instruments, valves, solenoids, pumps and switches may be used to provide additional information and coordinate the functions of the component systems. Other components such as snubbers, which are not needed to maintain accuracy in some systems, may be excluded if their exclusion is based upon good engineering judgment.

(b) *Major component description.* The analytical system, Figure N94–1, consists of a flame ionization detector (FID) (heated for methanol-fueled (235 ±15 °F (113 ±8 °C)) and for petroleum-fueled diesel (375 ±10 °F (191 ±6 °C) engines) for the measurement of hydrocarbons, a methane analyzer (consisting of a gas chromatograph combined with a FID) for the determination of CH_4 (for engines subject to NMHC standards, where applicable), nondispersive infrared analyzers (NDIR) for the measurement of carbon monoxide and carbon dioxide, and a chemiluminescence analyzer (CL) for the measurement of oxides of nitrogen. The analytical system for methanol consists of a gas chromatograph (GC), equipped with a flame ionization detector. The analysis for formaldehyde is performed using high pressure liquid chromatography (HPLC) of 2,4-dinitrophenylhydrazine (DNPH) derivatives using ultraviolet (UV) detection. The exhaust gas analytical system shall conform to the following requirements:

(1) The CL requires that the nitrogen dioxide present in the sample be converted to nitric oxide before analysis. Other types of analyzers may be used if shown to yield equivalent results and if approved in advance by the Administrator.

(2) The carbon monoxide (NDIR) analyzer may require a sample conditioning column containing $CaSO_4$, or desiccating silica gel to remove water vapor, and containing ascarite to remove carbon dioxide from the CO analysis stream.

(i) If CO instruments are used which are essentially free of CO_2 and water vapor interference, the use of the conditioning column may be deleted (see §§ 86.1322 and 86.1342).

(ii) A CO instrument will be considered to be essentially free of CO_2 and water vapor interference if its response to a mixture of three percent CO_2 in N_2, which has been bubbled through water at room temperature, produces an equivalent CO response, as measured on the most sensitive CO range, which is less than one percent of full scale CO concentration on ranges above 300 ppm full scale or less than 3 ppm on ranges below 300 ppm full scale (see § 86.1322).

(3)(i) Using a methane analyzer consisting of a gas chromatograph combined with a FID, the measurement of methane shall be done in accordance with SAE Recommended Practice J1151, ''Methane Measurement Using Gas Chromatography.'' (Incorporated by reference pursuant to § 86.1(b)(2).)

(ii) For natural gas vehicles, the manufacturer has the option of using gas chromatography to measure NMHC through direct quantitation of individual hydrocarbon species. The manufacturer shall conform to standard industry practices and use good engineering judgement.

(c) *Alternate analytical systems.* Analysis systems meeting the specifications of subpart D of this part may be used for testing required under this subpart, with the exception of §§ 86.346 and 86.347, provided that the systems in subpart D of this part meet the specifications of this subpart. Heated analyzers may be used in their heated configuration.

(d) *Other analyzers and equipment.* Other types of analyzers and equipment may be used if shown to yield equivalent results and if approved in advance by the Administrator.

[59 FR 48525, Sept. 21, 1994, as amended at 59 FR 50073, Sept. 30, 1994; 61 FR 127, Jan. 3, 1996; 62 FR 54730, Oct. 21, 1997]

§ 86.1312–88 Weighing chamber and microgram balance specifications.

(a) *Ambient conditions.* (1) *Temperature.* The ambient temperature of the chamber (or room) in which the particulate filters are conditioned and weighed shall be maintained at 295 K ± 3 K (22 °C ± 3 °C) during all filter conditioning and weighing.

(2) *Humidity.* The humidity of the chamber (or room) in which the particulate filters are conditioned and weighed shall be maintained at a dew point temperature of 282.5 K ± 3 K (9.4 °C ± 3 °C) and a relative humidity of 45% ±8%. Either the dew point temperature or the relative humidity or both may be averaged over the preceding 10 minute period on a moving average basis.

(3) The chamber (or room) environment shall be free of any ambient contaminates (such as dust) that would settle on the particulate filters during their stabilization. It is required that at least two unused reference filter pairs remain in the weighing room at all times in covered (to reduce dust contamination) but unsealed (to permit humidity exchange) petri dishes. These reference filter pairs shall be placed in the same general area as the sample filters. These reference filter pairs shall be weighed within 4 hours of, but preferably at the same time as, the sample filter pair weighings.

(4) If the average weight of the reference filter pairs changes between sample filter weighings by more than 40 micrograms, then all sample filters and background filters in the process of stabilization shall be discarded and the emissions tests repeated.

(5) If the room (or chamber) environmental conditions are not met, then the filters shall remain in the conditioning room for at least one hour after correct conditions are met prior to weighing.

(6) The reference filter pairs shall be changed at least once a month, but never between clean and used weighings of a given sample filter pairs. More than one set of reference filter pair may be used. The reference filters shall be the same size and material as the sample filters.

(b) *Weighing balance specifications.* The microgram balance used to determine the weights of all filters shall have a precision (standard deviation) of 20 micrograms and readability of 10 micrograms.

(Secs. 202, 203, 206, 207, 208, 301a, Clean Air Act, as amended; 42 U.S.C. 7521, 7522, 7525, 7541, 7542, 7601a)

[50 FR 10702, Mar. 15, 1985, as amended at 52 FR 47871, Dec. 16, 1987; 62 FR 47124, Sept. 5, 1997]

§86.1313–91 Fuel specifications.

(a) *Otto-cycle test fuel.* (1) Gasoline having the specifications listed in table N91–1 will be used by the Administrator in exhaust emission testing petroleum-fueled substantially equivalent specifications approved by the Administrator, shall be used by the manufacturer in exhaust emission testing, except that the octane specification does not apply.

TABLE N91–1

Item		ASTM	Value
Octane, research, min.	.....	D2699 ..	93
Sensitivity, min	.....	.....	7.5
Lead (organic)	g/U.S. gal. (g/liter).	D3237 ..	[1] (0.050) [1] (0.013)
Distillation range:			
IBP	°F	D86	75–95
	(°C)	.....	(23.9–35)
10 pct. point	°F	D86	120–135
	(°C)	.....	(48.9–57.2)
50 pct. point	°F	D86	200–230
	(°C)	.....	(93.3–110)
90 pct. point	°F	D86	300–325
	(°C)	.....	(148.9–162.8)
EP	max. °F, ...	D86	415
	(°C)	.....	(212.8)
Sulphur	max. wt. pct ...	D1266 ..	0.10
Phosphorus, max..	g/U.S. gal. (g/liter).	D3231 ..	0.005 (0.0013)
RVP	psi, (kPa)	D323	8.0–9.2 (60.0–63.4)
Hydrocarbon composition:			
Olefins	max. pct.	D1319 ..	10
Aromatics	max. pct.	D1319 ..	35
Saturates	.....	D1319 ..	([2])

[1] Maximum.
[2] Remainder.

(2) Unleaded gasoline representative of commercial gasoline which will be generally available through retail outlets shall be used in service accumulation.

(i) The octane rating of the gasoline used shall be not higher than one Research octane number above the minimum recommended by the manufacturer and have a minimum sensitivity of 7.5 octane numbers, where sensitivity is defined as the Research octane number minus the Motor octane number.

(ii) The Reid Vapor Pressure of the gasoline used shall be characteristic of the motor fuel used during the season in which the service accumulation takes place.

(3) Methanol fuel used for exhaust and evaporative emission testing and in service accumulation of methanol-fueled Otto-cycle engines shall be representative of commercially available methanol fuel and shall consist of at least 50 percent methanol by volume.

(i) Manufacturers shall recommend the methanol fuel to be used for testing and service accumulation in accordance with paragraph (a)(3) of this section.

(ii) The Administrator shall determine the methanol fuel to be used for testing and service accumulation.

(4) Other methanol fuels may be used for testing and service accumulation provided:

(i) They are commercially available, and

(ii) Information, acceptable to the Administrator, is provided to show that only the designated fuel would be used in customer service, and

(iii) Use of a fuel listed under paragraph (a)(3) of this section would have a detrimental effect on emissions or durability, and

(iv) Written approval from the Administrator of the fuel specifications must be provided prior to the start of testing.

(5) The specification range of the fuels to be used under paragraphs (a)(2), (a)(3), and (a)(4) of this section shall be reported in accordance with §86.090–21(b)(3).

(b) *Diesel Test fuel.* (1) The petroleum fuels for testing diesel engines employed for testing shall be clean and bright, with pour and cloud points adequate for operability. The petroleum fuel may contain nonmetallic additives as follows: Cetane improver, metal deactivator, antioxidant, dehazer, antirust, pour depressant, dye, dispersant,

and biocide. Except for the sulfur content of ''Type 2–D'' fuel, fuels specified for emissions testing are intended to be representative of commercially available in-use fuels.

(2) Petroleum fuel for diesel engines meeting the specifications in Table N91–2, or substantially equivalent specifications approved by the Administrator, shall be used in exhaust emissions testing. The grade of petroleum fuel used shall be commercially designated as ''Type 2–D'' grade diesel fuel except that fuel commercially designated as ''Type 1–D'' grade diesel fuel may be substituted provided that the manufacturer has submitted evidence to the Administrator demonstrating to the Administrator's satisfaction that this fuel will be the predominant in-use fuel. Such evidence could include such things as copies of signed contracts from customers indicating the intent to purchase and use ''Type 1–D'' grade diesel fuel as the primary fuel for use in the engines or other evidence acceptable to the Administrator.

TABLE N91–2

Item	ASTM	Type 1–D	Type 2–D
Cetane Number	D613	48–54	42–50
Cetane Index	D86	40–54	40–48
Distillation range:			
IBP °F	D86	330–390	340–400
(°C)		(165.6–198.9)	(171.1–204.4)
10 percent point, °F	D86	370–430	400–460
(°C)		(187.8–221.1)	(204.4–237.8)
50 percent point, °F	D86	410–480	470–540
(°C)		(210–248.9)	(243.3–282.2)
90 percent point, °F	D86	460–520	560–630
(°C)		(237.8–271.1)	(293.3–332.2)
EP, °F	D86	500–560	610–690
(°C)		(260.0–293.3)	(321.1–365.6)
Gravity, °API	D287	40–44	32–37
Total Sulfur, percent	D2622	0.08–0.12	0.08–0.12
Hydrocarbon composition:			
Aromatics, pct	D1319 or D5186	[1] 8	[1] 27
Paraffins, Naphthenes, Olefins	D1319	([2])	([2])
Flashpoint, °F	D93	120	130
(°C)		(48.9)	(54.4)
(minimum)		.....	.....
Viscosity, Centistokes	D445	1.6–2.0	2.0–3.2

[1] Minimum.
[2] Remainder.

(3) Petroleum fuel for diesel engines meeting the specifications in table N91–3, or substantially equivalent specifications approved by the Administrator, shall be used in service accumulation. The grade of petroleum fuel used shall be commercially designated as ''Type 2–D'' grade diesel fuel except that fuel commercially designated as ''Type 1–D'' grade diesel fuel may be substituted provided that the manufacturer has submitted evidence to the Administrator demonstrating to the Administrator's satisfaction that this fuel will be the predominant in-use fuel. Such evidence could include such things as copies of signed contracts from customers indicating the intent to purchase and use ''Type 1–D'' grade diesel fuel as the primary fuel for use in the engines or other evidence acceptable to the Administrator.

TABLE N91–3

Item	ASTM	Type 1–D	Type 2–D
Cetane Number	D613	42–56	30–58
Distillation range:			
90 pct. point, °F	D86	440–530	540–630
(°C)	.....	(226.7–276.7)	(282.2–332.2)
Gravity, °API	D287	39–45	30–42
Total sulfur, pct.	D2622	0.08–0.12	0.08–0.12
Flashpoint, min., °F	D93	120	130

TABLE N91–3—Continued

Item	ASTM	Type 1–D	Type 2–D
(°C)	.....	(48.9)	(54.4)
Viscosity, centistokes	D455	1.2–2.2	1.5–4.5

(4) Methanol fuel used for exhaust and evaporative emission testing and in service accumulation of methanol-fueled diesel engines shall be representative of commercially available methanol fuel and shall consist of at least 50 percent methanol by volume.

(i) Manufacturers shall recommend the methanol fuel to be used for testing and service accumulation in accordance with paragraph (b)(4) of this section.

(ii) The Administrator shall determine the methanol fuel to be used for testing and service accumulation.

(5) Other fuels may be used for testing and service accumulation provided:

(i) They are commercially available, and

(ii) Information, acceptable to the Administrator, is provided to show that only the designated fuel would be used in customer service, and

(iii) Use of a fuel listed under paragraphs (b)(2) and (b)(3) or (b)(4) of this section would have a detrimental effect on emissions or durability, and

(iv) Written approval from the Administrator of the fuel specifications must be provided prior to the start of testing.

(6) The specification range of the fuels to be used under paragraphs (b)(2), (b)(3), (b)(4), and (b)(5) of this section shall be reported in accordance with §86.090–21(b)(3).

(c) Fuels not meeting the specifications set forth in this section may be used only with the advance approval of the Administrator.

(d) *Mixtures of petroleum and methanol fuels for flexible fuel vehicles.* (1) Mixtures of petroleum and methanol fuels used for exhaust and evaporative emission testing and service accumulation for flexible fuel vehicles shall be within the range of fuel mixtures for which the vehicle was designed.

(2) Manufacturer testing and service accumulation may be performed using only those mixtures (mixtures may be different for exhaust testing, evaporative testing, and service accumulation) expected to result in the highest emissions, provided:

(i) The fuels which constitute the mixture will be used in customer service, and

(ii) Information, acceptable to the Administrator, is provided by the manufacturer to show that the designated fuel mixtures would result in the highest emissions, and

(iii) Written approval from the Administrator of the fuel specifications must be provided prior to the start of testing.

(3) The specification range of the fuels to be used under paragraph (d)(2) of this section shall be reported in accordance with §86.090–21(b)(3).

[55 FR 34147, Aug. 21, 1990, as amended at 58 FR 21401, Apr. 21, 1993; 62 FR 47125, Sept. 5, 1997]

§86.1313–94 Fuel specifications.

(a) *Gasoline fuel.* (1) Gasoline having the specifications listed in table N94–1 will be used by the Administrator in exhaust emission testing. Gasoline having these specifications or substantially equivalent specifications approved by the Administrator, shall be used by the manufacturer in exhaust emission testing, except that the octane specification does not apply.

TABLE N94–1

Item	ASTM	Value
Octane, research, min	D2699	93
Sensitivity, min	.....	7.5
Lead (organic), g/U.S. gal. (g/liter)	D3237	[1] (0.050) [1] (0.013)
Distillation range:		
IBP, °F (°C)	D86	75–95 (23.9–35)
10 pct. point, °F (°C)	D86	120–135 (48.9–57.2)
50 pct. point, °F (°C)	D86	200–230 (93.3–110)
90 pct. point, °F (°C)	D86	300–325 (148.9–162.8)
EP, max. °F (°C)	D86	415 (212.8)
Sulphur, Max., wt. pct	D1266	0.10

TABLE N94–1—Continued

Item	ASTM	Value
Phosphorus, max., g/U.S. gal. (g/liter)	D3231	0.005 (0.0013)
RVP, psi (kPa)	D323	8.0–9.2 (60.0–63.4)
Hydrocarbon composition:		
Olefins, max. pct	D1319	10
Aromatics, max. pct	D1319	35
Saturates	D1319	(2)

[1] Maximum.
[2] Remainder.

(2)(i) Unleaded gasoline representative of commercial gasoline which will be generally available through retail outlets shall be used in service accumulation.

(ii) The octane rating of the gasoline used shall not be higher than one Research octane number above the minimum recommended by the manufacturer and have a minimum sensitivity of 7.5 octane numbers, where sensitivity is defined as the Research octane number minus the Motor octane number.

(iii) The Reid Vapor Pressure of the gasoline used shall be characteristic of the motor fuel used during the season in which the service accumulation takes place.

(3) The specification range of the gasoline to be used under paragraph (a) of this section shall be reported in accordance with § 86.094–21(b)(3).

(b) *Petroleum diesel test fuel.* (1) The petroleum fuels for testing diesel engines employed for testing shall be clean and bright, with pour and cloud points adequate for operability. The petroleum diesel fuel may contain nonmetallic additives as follows: Cetane improver, metal deactivator, antioxidant, dehazer, antirust, pour depressant, dye, dispersant and biocide. Fuels specified for emissions testing are intended to be representative of commercially available in-use fuels.

(2) Petroleum fuel for diesel engines meeting the specifications in Table N94–2, or substantially equivalent specifications approved by the Administrator, shall be used in exhaust emissions testing. The grade of petroleum fuel used shall be commercially designated as ''Type 2–D'' grade diesel fuel except that fuel commercially designated at ''Type 1–D'' grade diesel fuel may be substituted provided that the manufacturer has submitted evidence to the Administrator demonstrating to the Administrator's satisfaction that this fuel will be the predominant in-use fuel. Such evidence could include such things as copies of signed contracts from customers indicating the intent to purchase and use ''Type 1–D'' grade diesel fuel as the primary fuel for use in the engines or other evidence acceptable to the Administrator.

TABLE N94–2

Item	ASTM	Type 1–D	Type 2–D
Cetane Number	D613	40–54	40–48
Cetane Index	D976	40–54	40–48
Distillation range:			
IBP °F	D86	330–390	340–400
(°C)		(165.6–198.9)	(171.1–204.4)
10 percent point, °F	D86	370–430	400–460
(°C)	(187.8–221.1)	(204.4–237.8)	
50 percent point, °F	D86	410–480	470–540
(°C)		(210–248.9)	(243.3–282.2)
90 percent point, °F	D86	460–520	560–630
(°C)		(237.8–271.1)	(293.3–332.2)
EP, °F	D86	500–560	610–690
(°C)		(260.0–293.3)	(321.1–365.6)
Gravity, °API	D287	40–44	32–37
Total Sulfur, percent	D2622	0.03–0.05	0.03–0.05
Hydrocarbon composition:			
Aromatics, pct	D1319 or D5186	[1] 8	[1] 27
Paraffins, Naphthenes, Olefins	D1319	(2)	(2)
Flashpoint, °F	D93	120	130
(°C)		(48.9)	(54.4)
(minimum)		.....	.....
Viscosity, Centistokes	D445	1.6–2.0	2.0–3.2

[1] Minimum.
[2] Remainder.

(3) Petroleum diesel fuel for diesel engines meeting the specifications in table N94–3, or substantially equivalent specifications approved by the Administrator, shall be used in service accumulation. The grade of petroleum diesel fuel used shall be commercially designated as ''Type 2–D'' grade diesel fuel except that fuel commercially designated as ''Type 1–D'' grade diesel fuel may be substituted provided that the manufacturer has submitted evidence to the Administrator demonstrating to the Administrator's satisfaction that this fuel will be the predominant in-use fuel. Such evidence could include such things as copies of signed contracts from customers indicating the intent to purchase and use ''Type 1–D'' grade diesel fuel as the primary fuel for use in the engines or other evidence acceptable to the Administrator.

TABLE N94–3

Item	ASTM	Type 1–D	Type 2–D
Cetane Number	D613	40–56	30–58
Cetane Index	D976	Min. 40	Min. 40
Distillation range:			
90 pct. point °F (°C)	D86	440–530 (226.7–276.7)	540–630 (282.2–332.2)
Gravity °API	D287	39–45	30–42
Total sulfur, min. pct	D2622	0.03–0.05	0.03–0.05
Flashpoint, min. °F (°C)	D93	120 (48.9)	130 54.4
Viscosity, centistokes	D445	1.2–2.2	1.5–4.5

(4) Other petroleum distillate fuels may be used for testing and service accumulation provided:

(i) They are commercially available; and

(ii) Information, acceptable to the Administrator, is provided to show that only the designated fuel would be used in customer service; and

(iii) Use of a fuel listed under paragraphs (b)(2) and (b)(3) of this section would have a detrimental effect on emissions or durability; and

(iv) Written approval from the Administrator of the fuel specifications must be provided prior to the start of testing.

(5) The specification range of the fuels to be used under paragraph (b) of this section shall be reported in accordance with § 86.094–21(b)(3).

(c) *Methanol-fuel.* (1) Methanol fuel used for exhaust and evaporative emission testing and in service accumulation of methanol-fueled engines shall be representative of commercially available methanol fuel and shall consist of at least 50 percent methanol by volume.

(i) Manufacturers shall recommend the methanol fuel to be used for testing and service accumulation.

(ii) The Administrator shall determine the methanol fuel to be used for testing and service accumulation.

(2) Other methanol fuels may be used for testing and service accumulation provided:

(i) They are commercially available; and

(ii) Information, acceptable to the Administrator, is provided to show that only the designated fuel would be used in customer service; and

(iii) Use of a fuel listed under paragraph (b)(4)(c)(1) of this section would have a detrimental effect on emissions or durability; and

(iv) Written approval from the Administrator of the fuel specifications must be provided prior to the start of testing.

(3) The specification range of the fuels to be used under paragraphs (c)(1) and (c)(2) of this section shall be reported in accordance with § 86.094–21(b)(3).

(d) *Mixtures of petroleum and methanol fuels for flexible fuel vehicles.* (1) Mixtures of petroleum and methanol fuels used for exhaust emission testing and service accumulation for flexible fuel vehicles shall consist of the methanol and petroleum fuels listed in paragraph (a) or (b) of this section, and shall be within the range of fuel mixtures for

which the vehicle was designed, as reported in accordance with § 86.94–21. The Administrator may use any fuel mixture within this range for testing.

(2) The fuel mixtures used by the manufacturers shall be sufficient to demonstrate compliance over the full design range, and shall include:

(i) For emission testing:

(A) A petroleum fuel specified in paragraph (a) or paragraph (b) of this section;

(B) A methanol fuel representative of the methanol fuel expected to the found in use.

(ii) For service accumulation, an alternating combination of the fuels specified in paragraphs (a) or (b), and (c) of this section that, based on good engineering judgement, demonstrates the durability of the emissions control system. The combination shall be selected such that the cumulative volumes of both the methanol fuel and the petroleum fuel used shall be at least 25 percent of the total fuel volume. The fuels shall be or alternated at intervals not to exceed 500 hours.

(iii) Or, other combinations for testing and/or service accumulation which demonstrate compliance with the standards over the entire design range of the vehicle, provided that written approval is obtained from the Administrator prior to the start of testing.

(3) The specification range of the fuels to be used under this paragraph (d) shall be reported in accordance with § 86.094–21.

(e) *Natural gas-fuel.* (1) Natural gas-fuel having the following specifications will be used by the Administrator for exhaust and evaporative emission testing of natural gas-fueled engines:

NATURAL GAS CERTIFICATION FUEL SPECIFICATIONS

Item		ASTM test method No.	Value
Methane	min. mole pct.	D1945	89.0
Ethane	max. mole pct.	D1945	4.5
C_3 and higher	max. mole pct.	D1945	2.3
C_6 and higher	max. mole pct.	D1945	0.2
Oxygen	max. mole pct.	D1945	0.6
Inert gases:			
Sum of CO_2 and N_2	max. mole pct.	D1945	4.0

NATURAL GAS CERTIFICATION FUEL SPECIFICATIONS—Continued

Item		ASTM test method No.	Value
Odorant [1]			

[1] The natural gas at ambient conditions must have a distinctive odor potent enough for its presence to be detected down to a concentration in air of not over ⅕ (one-fifth) of the lower limit of flammability.

(2) Natural gas-fuel representative of commercial natural gas-fuel and which will be generally available through retail outlets shall be used in service accumulation.

(3) Other natural gas-fuels may be used for testing and service accumulation provided:

(i) They are commercially available;

(ii) Information, acceptable to the Administrator, is provided to show that only the designated fuel would be used in customer service; and

(iii) Written approval from the Administrator of the fuel specifications must be provided prior to the start of testing.

(4) The specification range of the fuels to be used under paragraphs (e)(1) and (e)(2) of this section shall be reported in accordance with § 86.094–21(b)(3).

(f) *Liquified petroleum gas-fuel.* (1) Liquified petroleum gas-fuel used for exhaust and evaporative emission testing and in service accumulation shall be commercially available liquefied petroleum gas-fuel.

(i) Manufacturers shall recommend the liquefied petroleum gas-fuel to be used for testing and service accumulation.

(ii) The Administrator shall determine the liquefied petroleum gas-fuel to be used for testing and service accumulation.

(2) Other liquefied petroleum gas-fuels may be used for testing and service accumulation provided:

(i) They are commercially available;

(ii) Information, acceptable to the Administrator, is provided to show that only the designated fuel would be used in customer service; and

(iii) Written approval from the Administrator of the fuel specifications must be provided prior to the start of testing.

(3) The specification range of the fuels to be used under paragraphs (f)(1) and (f)(2) of this section shall be measured in accordance with ASTM D2163–91 and reported in accordance with §86.094–21(b)(3).

(g) Fuels not meeting the specifications set forth in this section may be used only with the advance approval of the Administrator.

[59 FR 48528, Sept. 21, 1994, as amended at 60 FR 34371, June 30, 1995; 62 FR 47125, Sept. 5, 1997]

§86.1313–98 Fuel specifications.

Section 86.1313–98 includes text that specifies requirements that differ from §86.1313–94. Where a paragraph in §86.1313–94 is identical and applicable to §86.1313–98, this may be indicated by specifying the corresponding paragraph and the statement ''[Reserved]. For guidance see §86.1313–94''.

(a) through (b)(1) [Reserved]. For guidance see §86.1313–94.

(b)(2) Petroleum fuel for diesel engines meeting the specifications in Table N98–2, or substantially equivalent specifications approved by the Administrator, shall be used in exhaust emissions testing. The grade of petroleum fuel used shall be commercially designated as ''Type 2–D'' grade diesel fuel except that fuel commercially designated at ''Type 1–D'' grade diesel fuel may be substituted provided that the manufacturer has submitted evidence to the Administrator demonstrating to the Administrator's satisfaction that this fuel will be the predominant in-use fuel. Such evidence could include such things as copies of signed contracts from customers indicating the intent to purchase and use ''Type 1–D'' grade diesel fuel as the primary fuel for use in the engines or other evidence acceptable to the Administrator.

TABLE N98–2

Item	ASTM	Type 1–D	Type 2–D
Cetane Number	D613	40–54	40–48
Cetane Index	D976	40–54	40–48
Distillation range:			
IBP °F	D86	330–390	340–400
(°C)		(165.6–198.9)	(171.1–204.4)
10 percent point, °F	D86	370–430	400–460
(°C)		(187.8–221.1)	(204.4–237.8)
50 percent point, °F	D86	410–480	470–540
(°C)		(210–248.9)	(243.3–282.2)
90 percent point, °F	D86	460–520	560–630
(°C)		(237.8–271.1)	(293.3–332.2)
EP, °F	D86	500–560	610–690
(°C)		(260.0–293.3)	(321.1–365.6)
Gravity, °API	D287	40–44	32–37
Total Sulfur, percent	D2622	0.03–0.05	0.03–0.05
Hydrocarbon composition:			
Aromatics, pct	D5186	[1] 8	[1] 27
Paraffins, Naphthenes, Olefins	D1319	([2])	([2])
Flashpoint, °F	D93	120	130
(°C)		(48.9)	(54.4)
(minimum)		.....	.....
Viscosity, Centistokes	D445	1.6–2.0	2.0–3.2

[1] Minimum.
[2] Remainder.

(b)(3) through (e) [Reserved]. For guidance see §86.1313–94.

[62 FR 47126, Sept. 5, 1997]

§86.1314–84 Analytical gases.

(a) Gases for the CO and CO_2 analyzers shall be single blends of CO and CO_2, respectively, using nitrogen as the diluent.

(b) Gases for the hydrocarbon analyzer shall be single blends of propane using air as the diluent.

(c) Gases for the NO_X analyzer shall be single blends of NO named as NO_X with a maximum NO_2 concentration of 5 percent of the nominal value using nitrogen as the diluent.

(d) Fuel for the FID shall be a blend of 40±2 percent hydrogen with the balance being helium. The mixture shall contain less than 1 ppm equivalent carbon response; 98 to 100 percent hydrogen fuel may be used with advance approval of the Administrator.

(e) The allowable zero gas (air or nitrogen) impurity concentrations shall not exceed 1 ppm equivalent carbon response, 1 ppm carbon monoxide, 0.04 percent (400 ppm) carbon dioxide and 0.1 ppm nitric oxide.

(f)(1) ''Zero-grade air'' includes artificial ''air'' consisting of a blend of nitrogen and oxygen with oxygen concentrations between 18 and 21 mole percent.

(2) Calibration gases shall be accurate to within ±1 percent of NBS gas standards, or other gas standards which have been approved by the Administrator.

(3) Span gases shall be accurate to within ±2 percent of NBS gas standards, or other gas standards which have been approved by the Administrator.

(g) The use of precision blending devices (gas dividers) to obtain the required calibration gas concentrations is acceptable, provided that the blended gases are accurate to within ±1.5 percent of NBS gas standards, or other gas standards which have been approved by the Administrator. This accuracy implies that primary gases used for blending must be ''named'' to an accuracy of at least ±1 percent, traceable to NBS or other approved gas standards.

[48 FR 52210, Nov. 16, 1983, as amended at 49 FR 48144, Dec. 10, 1984]

§ 86.1314–94 Analytical gases.

(a) Gases for the CO and CO_2 analyzers shall be single blends of CO and CO_2, respectively, using nitrogen as the diluent.

(b) Gases for the hydrocarbon analyzer shall be:

(1) Single blends of propane using air as the diluent; and

(2) Optionally, for response factor determination, single blends of methanol using air as the diluent.

(c) Gases for the methane analyzer shall be single blends of methane using air as the diluent.

(d) Gases for the NO_X analyzer shall be single blends of NO named as NO_X with a maximum NO_2 concentration of five percent of the nominal value using nitrogen as the diluent.

(e) Fuel for FIDs and HFIDs and methane analyzers shall be a blend of 40 ±2 percent hydrogen with the balance being helium. The mixture shall contain less than 1 ppm equivalent carbon response. 98 to 100 percent hydrogen fuel may be used with advance approval by the Administrator.

(f) The allowable zero gas (air or nitrogen) impurity concentrations shall not exceed 1 ppm equivalent carbon response, 1 ppm carbon monoxide, 0.04 percent (400 ppm) carbon dioxide and 0.1 ppm nitric oxide.

(g)(1) ''Zero-grade air'' includes artificial ''air'' consisting of a blend of nitrogen and oxygen with oxygen concentrations between 18 and 21 mole percent.

(2) Calibration gases (not including methanol) shall be traceable to within one percent of NIST (formerly NBS) gas standards, or other gas standards which have been approved by the Administrator.

(3) Span gases (not including methanol) shall be accurate to within two percent of true concentration, where true concentration refers to NIST (formerly NBS) gas standards, or other gas standards which have been approved by the Administrator.

(4) Methanol in air gases used for response factor determination shall:

(i) Be traceable to within ±2 percent of NIST (formerly NBS) gas standards, or other standards which have been approved by the Administrator; and

(ii) Remain within ±2 percent of the labeled concentration. Demonstration of stability shall be based on a quarterly measurement procedure with a precision of ±2 percent (two standard deviations), or other method approved by the Administrator. The measurement procedure may incorporate multiple measurements. If the true concentration of the gas changes by more than two percent, but less than ten percent, the gas may be relabeled with the new concentration.

(h) The use of precision blending devices (gas dividers) to obtain the required calibration gas concentrations

is acceptable, provided that the blended gases are accurate to within ±1.5 percent of NBS gas standards, or other gas standards which have been approved by the Administrator. This accuracy implies that primary gases used for blending must be ''named'' to an accuracy of at least ±1 percent, traceable to NBS or other approved gas standards.

[59 FR 48530, Sept. 21, 1994, as amended at 60 FR 34371, June 30, 1995]

§86.1316–90 Calibrations; frequency and overview.

(a) Calibrations shall be performed as specified in §§86.1318 through 86.1326.

(b) At least monthly or after any maintenance which could alter calibration, the following calibrations and checks shall be performed:

(1) Calibrate the hydrocarbon analyzer, carbon dioxide analyzer, carbon monoxide analyzer, oxides of nitrogen analyzer, methanol analyzer and formaldehyde analyzer (certain analyzers may require more frequent calibration depending on the equipment and use). New calibration curves need not be generated each month if the existing curve meets the requirements of §§86.1321 through 86.1324.

(2) Calibrate the engine dynamometer flywheel torque and speed measurement transducers, and calculate the feedback signals to the cycle verification equipment.

(3) Check the oxides of nitrogen converter efficiency.

(c) At least weekly or after any maintenance which could alter calibration, the following checks shall be performed:

(1) [Reserved]

(2) Perform a CVS system verification.

(3) Check the shaft torque feedback signal at steady-state conditions by comparing:

(i) Shaft torque feedback to dynamometer beam load, or

(ii) By comparing in-line torque to armature current, or

(iii) By checking the in-line torque meter with a dead weight per §86.1308(e).

(d) The CVS positive displacement pump or critical flow venturi shall be calibrated following initial installation, major maintenance or as necessary when indicated by the CVS system verification (described in §86.1319).

(e) Sample conditioning columns, if used in the CO analyzer train, should be checked at a frequency consistent with observed column life or when the indicator of the column packing begins to show deterioration.

(f) *For diesel fuel testing only*. The carbon monoxide analyzer shall be calibrated at least every two months or after any maintenance which could alter calibration.

[54 FR 14591, Apr. 11, 1989, as amended at 58 FR 58426, Nov. 1, 1993; 62 FR 47126, Sept. 5, 1997]

§86.1316–94 Calibrations; frequency and overview.

(a) Calibrations shall be performed as specified in §§86.1318 through 86.1326.

(b) At least monthly or after any maintenance which could alter calibration, the following calibrations and checks shall be performed:

(1) Calibrate the hydrocarbon analyzer, carbon dioxide analyzer, carbon monoxide analyzer, and oxides of nitrogen analyzer (certain analyzers may require more frequent calibration depending on the equipment and use). New calibration curves need not be generated each month if the existing curve meets the requirements of §§86.1321 through 86.1324.

(2) Calibrate the engine dynamometer flywheel torque and speed measurement transducers, and calculate the feedback signals to the cycle verification equipment.

(3) Check the oxides of nitrogen converter efficiency.

(c) At least weekly or after any maintenance which could alter calibration, the following checks shall be performed:

(1) Perform a CVS system verification.

(2) Check the shaft torque feedback signal at steady-state conditions by comparing:

(i) Shaft torque feedback to dynamometer beam load; or

(ii) By comparing in-line torque to armature current; or

(iii) By checking the in-line torque meter with a dead weight per §86.1308(e).

(d) The CVS positive displacement pump or critical flow venturi shall be calibrated following initial installation, major maintenance or as necessary when indicated by the CVS system verification (described in § 86.1319).

(e) Sample conditioning columns, if used in the CO analyzer train, should be checked at a frequency consistent with observed column life or when the indicator of the column packing begins to show deterioration.

(f) For diesel fuel testing only. The carbon monoxide analyzer shall be calibrated at least every two months or after any maintenance which could alter calibration.

[59 FR 48530, Sept. 21, 1994, as amended at 60 FR 34371, June 30, 1995; 62 FR 47126, Sept. 5, 1997]

§ 86.1318–84 Engine dynamometer system calibrations.

(a) The engine flywheel torque and engine speed measurement transducers shall be calibrated at least once each month with the calibration equipment described in § 86.1308–84.

(b) The engine flywheel torque feedback signals to the cycle verification equipment shall be electronically checked before each test, and adjusted as necessary.

(c) Other engine dynamometer system calibrations shall be performed as dictated by good engineering practice.

(d) When calibrating the engine flywheel torque transducer, any lever arm used to convert a weight or a force through a distance into a torque shall be used in a horizontal position (±5 degrees).

(e) Calibrated resistors may not be used for engine flywheel torque transducer calibration, but may be used to span the transducer prior to engine testing.

§ 86.1319–84 CVS calibration.

(a) The CVS is calibrated using an accurate flowmeter and restrictor valve. The flowmeter calibration shall be traceable to the NBS, and will serve as the reference value (NBS ''true'' value) for the CVS calibration. (Note: In no case should an upstream screen or other restriction which can affect the flow be used ahead of the flowmeter unless calibrated throughout the flow range with such a device.) The CVS calibration procedures are designed for use of a ''metering venturi'' type flowmeter. Large radius or ASME flow nozzles are considered equivalent if traceable to NBS measurements. Other measurement systems may be used if shown to be equivalent under the test conditions in this action and traceable to NBS measurements. Measurements of the various flowmeter parameters are recorded and related to flow through the CVS. Procedures used by EPA for both PDP– and CFV–CVS's are outlined below. Other procedures yielding equivalent results may be used if approved in advance by the Administrator.

(b) After the calibration curve has been obtained, verification of the entire system may be performed by injecting a known mass of gas into the system and comparing the mass indicated by the system to the true mass injected. An indicated error does not necessarily mean that the calibration is wrong, since other factors can influence the accuracy of the system (e.g., analyzer calibration, leaks, or HC hangup). A verification procedure is found in paragraph (e) of this section.

(c) *PDP calibration.* (1) The following calibration procedure outlines the equipment, the test configuration, and the various parameters which must be measured to establish the flow rate of the CVS pump.

(i) All the parameters related to the pump are simultaneously measured with the parameters related to a flowmeter which is connected in series with the pump.

(ii) The calculated flow rate, ft^3/min. (at a pump inlet absolute pressure and temperature), can then be plotted versus a correlation function which is the value of a specific combination of pump parameters.

(iii) The linear equation which relates the pump flow and the correlation function is then determined.

(iv) In the event that a CVS has a multiple speed drive, a calibration for each range used must be performed.

(2) This calibration procedure is based on the measurement of the absolute values of the pump and flowmeter parameters that relate the flow rate at each point. Two conditions must be

maintained to assure the accuracy and integrity of the calibration curve:

(i) The temperature stability must be maintained during calibration. (Flowmeters are sensitive to inlet temperature oscillations; this can cause the data points to be scattered. Gradual changes in temperature are acceptable as long as they occur over a period of several minutes.)

(ii) All connections and ducting between the flowmeter and the CVS pump must be absolutely void of leakage.

(3) During an exhaust emission test the measurement of these same pump parameters enables the user to calculate the flow rate from the calibration equation.

(4) Connect a system as shown in Figure N84–6. Although particular types of equipment are shown, other configurations that yield equivalent results may be used if approved in advance by the Administrator. For the system indicated, the following measurements and accuracies are required:

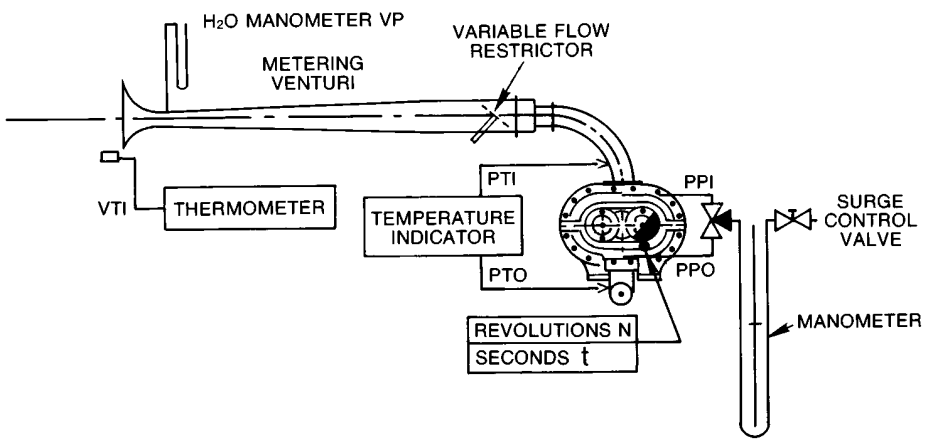

FIGURE N84-6 — PDP-CVS CALIBRATION CONFIGURATION

CALIBRATION DATA MEASUREMENTS

Parameter	Symbol	Units	Sensor-readout tolerances
Barometric pressure (corrected)	P_B	In. Hg (kPa)	±.10 in. Hg (±.340 kPa).
Ambient temperature	T_A	°F (°C)	±.5 °F (±.28 °C).
Air temperature into metering venturi	ETI	°F (°C)	±2.0 °F (±1.11 °C).
Pressure drop between the inlet and throat of metering venturi.	EDP	In. H2O (kPa)	±.05 in. H_2O (±.012 kPa).
Air flow	Q_S	Ft^3/min. (m^3/min.)	±.5% of NBS "true" value.
Air temperature at CVS pump inlet	PTI	°F (°C)	±2.0 °F (±1.11 °C).
Pressure depression at CVS pump inlet	PPI	In. Fluid (kPa)	±.13 in. Fluid (±.055 kPa).
Specific gravity of manometer fluid (1.75 oil)	Sp. G		
Pressure head at CVS pump outlet	PPO	In. Fluid (kPa)	±.13 in. Fluid (±.055 kPa).
Air temperature at CVS pump outlet (optional)	PTO	°F (°C)	±2.0 °F (±1.11 °C).
Pump revolutions during test period	N	Revs	±1 Rev.
Elapsed time for test period	t	s	±.5 s.

(5) After the system has been connected as shown in Figure N84–6, set the variable restrictor in the wide open position and run the CVS pump for 20 minutes. Record the calibration data.

(6) Reset the restrictor valve to a more restricted condition in an increment of pump inlet depression that will yield a minimum of six data points for the total calibration. Allow the system to stabilize for 3 minutes and repeat the data acquisition.

(7) *Data analysis:* (i) The air flow rate, Q_s, at each test point is calculated in standard cubic feet per minute (68 °F, 29.92″ Hg) from the flowmeter data using the manufacturer's prescribed method.

(ii) The air flow rate is then converted to pump flow, V_o, in cubic feet per revolution at absolute pump inlet temperature and pressure:

$$V_o = \frac{Q_s}{n} \times \frac{T_p}{528} \times \frac{29.92}{P_p}$$

Where:

V_o=Pump flow, ft³/revolution (m³/revolution) at T_p, P_p

Q_s=Meter air flow rate in standard cubic feet per minute, standard conditions are 68 °F, 29.92 inches Hg (20 °C, 101.3 kPa)

n=Pump speed in revolutions per minute

T_p=Pump inlet temperature °R(°K)

=PTI + 460 (°R), or

=PTI + 273 (°K)

P_p=Absolute pump inlet pressure, inches Hg (kPa)

=P_B − PPI (Sp. Gr./13.5955) and

=P_B − PPI for SI units

Where:

P_B=barometric pressure, inches Hg (kPa)

PPI=Pump inlet depression, inches fluid (kPa)

Sp. Gr.=Specific gravity of manometer fluid

(iii) The correlation function at each test point is then calculated from the calibration data.

$$x_o = \frac{1}{n}\sqrt{\frac{\Delta P}{P_e}}$$

Where:

X_o = correlation function.

ΔP = The pressure differential from pump inlet to pump outlet, inches Hg (kPa).

= $P_e - P_p$

P_e = Absolute pump outlet pressure, inches Hg (kPa)

= P_B + PPO(Sp. Gr./13.5955) and

= P_B for SI units

Where:

PPO = Pressure head at pump outlet, inches fluid (kPa).

(iv) A linear least squares fit is performed to generate the calibration equation which has the form:

$V_o = D_o - M(X_o)$

D_o and M are the intercept and slope constants, respectively, describing the regression lines.

(8) A CVS system that has multiple speeds should be calibrated on each speed used. The calibration curves generated for the ranges will be approximately parallel and the intercept values, D_o, will increase as the pump flow range decreases.

(9) If the calibration has been performed carefully, the calculated values from the equation will be within ±0.50 percent of the measured value of V_o. Values of M will vary from one pump to another, but values of D_o for pumps of the same make, model and range should agree within ±3 percent of each other. Particulate influx over time will cause the pump slip to decrease, as reflected by lower values for M. Calibrations should be performed at pump start-up and after major maintenance to assure the stability of the pump slip rate. Analysis of mass injection data will also reflect pump slip stability.

(d) *CFV calibration.* (1) Calibration of the CFV is based upon the flow equation for a critical venturi. Gas flow is a function of inlet pressure and temperature:

$$Q_s = \frac{K_v P}{\sqrt{T}}$$

The calibration procedure described in paragraph (d)(3) of this section establishes the value of the calibration coefficient at measured values of pressure, temperature and air flow.

(2) The manufacturer's recommended procedure shall be followed for calibrating electronic portions of the CFV.

(3) Measurements necessary for flow calibration are as follows:

CALIBRATION DATA MEASUREMENTS

Parameter	Symbol	Units	Tolerances
Barometric pressure (corrected)	P_b	Inches Hg (kPa)	±.01 in Hg (±.034 kPa).
Air temperature, flowmeter	ETI	°F (°C)	±.25°F (±.14°C).
Pressure depression upstream of LFE	EPI	Inches H2O (kPa)	±.05 in H_2O (±.012 kPa).
Pressure drop across LFE matrix	EDP	Inches H2O (kPa)	±.005 in H_2O (±.001 kPa).
Air flow	Q_s	Ft^3/min. (m^3/min,)	±.5 pct.
CFV inlet depression	PPI	Inches fluid (kPa)	±.13 in fluid (±.055 kPa).
Temperature at venturi inlet	T_v	°F (°C)	±0.5°F (±0.28°C).
Specific gravity of manometer fluid (1.75 oil)	Sp. Gr		

(4) Set up equipment as shown in Figure N84–7 and eliminate leaks. (Leaks between the flow measuring devices and the critical flow venturi will seriously affect the accuracy of the calibration.)

(5) Set the variable flow restrictor to the open position, start the blower, and allow the system to stabilize. Record data from all instruments.

(6) Vary the flow restrictor and make at least eight readings across the critical flow range of the venturi.

(7) *Data analysis.* The data recorded during the calibration are to be used in the following calculations:

(i) The air flow rate, Qs, at each test point is calculated in standard cubic feet per minute from the flow meter data using the manufacturer's prescribed method.

(ii) Calculate values of the calibration coefficient for each test point:

$$K_v = \frac{Q_s \sqrt{T_v}}{P_v}$$

(iii) Plot K_v as a function of venturi inlet pressure. For choked flow, K_v will have a relatively constant value. As pressure decreases (vacuum increases), the venturi becomes unchoked and K_v decreases. (See Figure N84–8.)

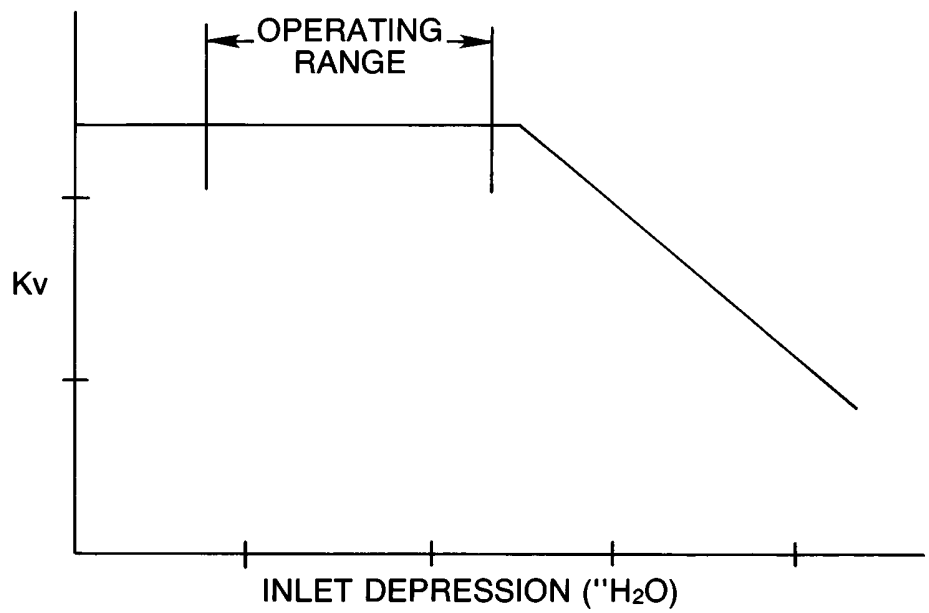

FIGURE N84-8 — SONIC FLOW CHOKING

(iv) For a minimum of 8 points in the critical region calculate an average K_v and the standard deviation.

(v) If the standard deviation exceeds 0.3 percent of the average K_v, take corrective action.

(e) *CVS system verification.* The following ''gravimetric'' technique can be used to verify that the CVS and analytical instruments can accurately measure a mass of gas that has been injected into the system. (Verification can also be accomplished by constant flow metering using critical flow orifice devices.)

(1) Obtain a small cylinder that has been charged with pure propane.

(2) Determine the weight of the reference propane cylinder to an accuracy of ±0.2 percent or less of the actual amount of propane discharged into the system.

(3) Operate the CVS in the normal manner and release a quantity of pure propane into the system during the sampling period (approximately 5 minutes).

(4) The calculations of §86.1342 are performed in the normal way except in the case of propane. The density of propane (17.30 g/ft^3/carbon atom (0.6109 kg/m^3/carbon atom)) is used in place of the density of exhaust hydrocarbons.

(5) The gravimetric mass is subtracted from the CVS measured mass and then divided by the gravimetric mass to determine the percent accuracy of the system.

(6) Good engineering practice requires that the cause for any discrepancy greater than ± 2 percent must be found and corrected.

[48 FR 52210, Nov. 16, 1983, as amended at 49 FR 48144, Dec. 10, 1984; 52 FR 47871, Dec. 16, 1987; 63 FR 24449, May 4, 1998]

§86.1319–90 CVS calibration.

(a) The CVS is calibrated using an accurate flowmeter and restrictor valve. The flowmeter calibration shall be traceable to the NBS, and will serve as the reference value (NBS ''true'' value) for the CVS calibration. (*Note:* In no case should an upstream screen or other restriction which can affect the flow be used ahead of the flowmeter unless calibrated throughout the flow range with such a device.) The CVS calibration procedures are designed for use of a ''metering venturi'' type flowmeter. Large radius or ASME flow nozzles are considered equivalent if traceable to NBS measurements. Other measurement systems may be used if shown to be equivalent under the test conditions in this section and traceable to NBS measurements. Measurements of the various flowmeter parameters are recorded and related to flow through the CVS. Procedures used by EPA for both PDP–CVS and CFV–CVS are outlined below. Other procedures yielding equivalent results may be used if approved in advance by the Administrator.

(b) After the calibration curve has been obtained, verification of the entire system may be performed by injecting a known mass of gas into the system and comparing the mass indicated by the system to the true mass injected. An indicated error does not necessarily mean that the calibration is wrong, since other factors can influence the accuracy of the system (*e.g.*, analyzer calibration, leaks, or HC hangup). A verification procedure is found in paragraph (e) of this section.

(c) *PDP calibration.* (1) The following calibration procedure outlines the equipment, the test configuration, and the various parameters which must be measured to establish the flow rate of the CVS pump.

(i) All the parameters related to the pump are simultaneously measured with the parameters related to a flowmeter which is connected in series with the pump.

(ii) The calculated flow rate, ft^3/min, (at pump inlet absolute pressure and temperature) can then be plotted versus a correlation function which is the value of a specific combination of pump parameters.

(iii) The linear equation which relates the pump flow and the correlation function is then determined.

(iv) In the event that a CVS has a multiple speed drive, a calibration for each range used must be performed.

(2) This calibration procedure is based on the measurement of the absolute values of the pump and flowmeter parameters that relate the flow rate at each point. Two conditions must be maintained to assure the accuracy and integrity of the calibration curve:

(i) The temperature stability must be maintained during calibration. (Flowmeters are sensitive to inlet temperature oscillations; this can cause the data points to be scattered. Gradual changes in temperature are acceptable as long as they occur over a period of several minutes.)

(ii) All connections and ducting between the flowmeter and the CVS pump must be absolutely void of leakage.

(3) During an exhaust emission test the measurement of these same pump

parameters enables the user to calculate the flow rate from the calibration equation.

(4) Connect a system as shown in Figure N84–6. Although particular types of equipment are shown, other configurations that yield equivalent results may be used if approved in advance by the Administrator. For the system indicated, the following measurements and accuracies are required:

CALIBRATION DATA MEASUREMENTS

Parameter	Symbol	Units	Sensor-readout tolerances
Barometric pressure (corrected)	P_B	in. Hg (kPa)	±0.10 in. Hg (±0.340 kPa).
Ambient temperature	T_A	°F (°C)	±0.5 °F (±0.28 °C).
Air temperature into metering venturi	ETI	°F (°C)	±2.0 °F (±1.1 °C).
Pressure drop between the inlet and throat of metering venturi.	EDP	in. H_20 (kPa)	±0.05 in H_2O (±0.012 kPa).
Air flow	Q_S	ft³/min (m³/min)	±0.5% of NBS ''true'' value.
Air temperature at CVS pump inlet	PTI	°F (°C)	±2.0 °F (±1.1 °C).
Pressure depression at CVS pump inlet	PPI	in. Fluid (kPa)	±0.13 in. Fluid (±0.055 kPa).
Specific gravity of manometer fluid (1.75 oil)	Sp.Gr.		.
Pressure head at CVS pump outlet	PPO	in. Fluid (kPa)	±0.13 in. Fluid (±0.055 kPa).
Air temperature at CVS pump outlet (optional)	PTO	°F (°C)	±2.0 °F (±1.1 °C).
Pump revolutions during test period	N	Revs	± 1 Rev..
Elapsed time for test period	t	sec.	±0.5 sec.

(5) After the system has been connected as shown in Figure N84–6, set the variable restrictor in the wide open position and run the CVS pump for 20 minutes. Record the calibration data.

(6) Reset the restrictor valve to a more restricted condition in an increment of pump inlet depression that will yield a minimum of six data points for the total calibration. Allow the system to stabilize for 3 minutes and repeat the data acquisition.

(7) *Data analysis:*

(i) The air flow rate, Q_s, at each test point is calculated in standard cubic feet per minute (68°, 29.92 in. Hg.) from the flowmeter data using the manufacturer's prescribed method.

(ii) The air flow rate is then converted to pump flow, V_o, in cubic feet per revolution at absolute pump inlet temperature and pressure:

$V_o = (Q_{s/n}) \times (T_p/528) \times (29.92/P_p)$

Where:

(A) V_o = Pump flow, ft³/rev (m³/rev) at T_p, P_p.

(B) Q_s = Meter air flow rate in standard cubic feet per minute, standard conditions are 68 °F, 29.92 in. Hg (20 °C, 101.3 kPa).

(C) n = Pump speed in revolutions per minute.

(D) T_p = Pump inlet temperature °R(°K) = PTI + 460 (°R), or = PTI + 273 (°K).

(E) P_p = Absolute pump inlet pressure, in. Hg. (kPa)

= P_B − PPI(Sp.Gr./13.5955) and

= PB − PPI for SI units.

Where:

(F) P_B = barometric pressure, in. Hg. (kPa).

(G) PPI = Pump inlet depression, in. fluid (kPa).

(H) Sp.Gr. = Specific gravity of manometer fluid.

(iii) The correlation function at each test point is then calculated from the calibration data:

$$X_o = \frac{1}{n}\sqrt{\frac{\Delta P}{P_e}}$$

Where:

(A) X_o = correlation function.

(B) D_p = The pressure differential from pump inlet to pump outlet, in. Hg. (kPa).

= P_{e-Pp}.

(C) P_e = Absolute pump outlet pressure, in. Hg. (kPa)

= P_B + PPO (Sp.Gr./13.5955) and

= P_B + PPO *for SI units.*

Where:

(D) PPO = Pressure head at pump outlet, in. fluid (kPa).

(iv) A linear least squares fit is performed to generate the calibration equation which has the form:

$V_o = D_o - M(X_o)$

D_o and M are the intercept and slope constants, respectively, describing the regression line.

(8) A CVS system that has multiple speeds should be calibrated on each speed used. The calibration curves generated for the ranges will be approximately parallel and the intercept values, D_o, will increase as the pump flow range decreases.

(9) If the calibration has been performed carefully, the calculated values from the equation will be within ±0.50 percent of the measured value of V_o. Values of M will vary from one pump to another, but values of D_o for pumps of the same make, model and range should agree within ±3 percent of each other. Particulate influx over time will cause the pump slip to decrease, as reflected by lower values for M. Calibrations should be performed at pump start-up and after major maintenance to assure the stability of the pump slip rate. Analysis of mass injection data will also reflect pump slip stability.

(d) *CFV calibration.* (1) Calibration of the CFV is based upon the flow equation for a critical venturi. Gas flow is a function of inlet pressure and temperature:

$$Q_s = \frac{K_v P}{\sqrt{T}}$$

Where:

(i) Q_s = flow.

(ii) K_v = calibration coefficient.

(iii) P = absolute pressure.

(iv) T = absolute temperature.

The calibration procedure described in paragraph (d)(3) of this section establishes the value of the calibration coefficient at measured values of pressure, temperature and air flow.

(2) The manufacturer's recommended procedure shall be followed for calibrating electronic portions of the CFV.

(3) Measurements necessary for flow calibration are as follows:

CALIBRATION DATA MEASUREMENTS

Parameter	Symbol	Units	Sensor-readout tolerances
Barometric pressure (corrected)	P_b	in Hg (kPa)	±.01 in Hg (±.034 kPa).
Air temperature, into flowmeter	ETI	°F (°C)	±0.5 °F (±0.28 °C).
Pressure drop between the inlet and throat of metering venturi	EDP	Inches H2O (kPa)	±0.05 in H_2O (±0.012 kPa).
Air flow	Q_s	Ft^3/min. (m^3/min,)	±.5% of NBS ''true'' value.
CFV inlet depression	PPI	Inches fluid (kPa)	±.13 in fluid (±.055 kPa).
Temperature at venturi inlet	T_v	°F (°C)	±4.0 °F (±2.22 °C).
Specific gravity of manometer fluid (1.75 oil)	Sp. Gr		

(4) Set up equipment as shown in Figure N84–7 and eliminate leaks. (Leaks between the flow measuring devices and the critical flow venturi will seriously affect the accuracy of the calibration.)

(5) Set the variable flow restrictor to the open position, start the blower, and allow the system to stabilize. Record data from all instruments.

(6) Vary the flow restrictor and make at least eight readings across the critical flow range of the venturi.

(7) *Data analysis.* The data recorded during the calibration are to be used in the following calculations:

(i) The air flow rate, Q_s, at each test point is calculated in standard cubic feet per minute from the flow meter data using the manufacturer's prescribed method.

(ii) Calculate values of the calibration coefficient for each test point:

$$K_v = \frac{Q_s \sqrt{T_v}}{P_v}$$

Where:

(A) Q_s = Flow rate in standard cubic feet per minute, at the standard conditions of 68 °F, 29.92 in Hg (20 °C, 101.3 kPa).

(B) T_v = Temperature at venturi inlet, °R(°K).

(C) P_v = Pressure at venturi inlet, in. Hg. (kPA)

= P_B − PPI (Sp.GR./13.5955), and

= P_B − PPI *for SI units.*

Where:

(D) PPI = Venturi inlet pressure depression, in. fluid (kPa).

(E) Sp.Gr. = Specific gravity of manometer fluid.

(iii) Plot K_v as a function of venturi inlet pressure. For choked flow, K_v will have a relatively constant value. As pressure decreases (vacuum increases), the venturi becomes unchoked and K_v decreases. (See Figure N84–8.)

(iv) For a minimum of 8 points in the critical region calculate an average K_v and the standard deviation.

(v) If the standard deviation exceeds 0.3 percent of the average K_v, take corrective action.

(e) *CVS system verification.* The following ''gravimetric'' technique can be used to verify that the CVS and analytical instruments can accurately measure a mass of gas that has been injected into the system. (Verification can also be accomplished by constant flow metering using critical flow orifice devices.)

(1) Obtain a small cylinder that has been charged with pure propane or carbon monoxide gas (CAUTION—carbon monoxide is poisonous).

(2) Determine a reference cylinder weight to the nearest 0.01 grams.

(3) Operate the CVS in the normal manner and release a quantity of pure propane into the system during the sampling period (approximately 5 minutes).

(4) Following completion of step (3) above (if methanol injection is required), continue to operate the CVS in the normal manner and release a known quantity of pure methanol (in gaseous form) into the system during the sampling period (approximately five minutes). This step does not need to be performed with each verification, provided that it is performed at least twice annually.

(5) The calculations of § 86.1342 are performed in the normal way except in the case of propane. The density of propane (17.30 g/ft^3/carbon atom (0.6109 kg/m^3/carbon atom)) is used in place of the density of exhaust hydrocarbons. In the case of methanol, the density of 37.71 g/ft^3 (1.332 kg/m^3) is used.

(6) The gravimetric mass is subtracted from the CVS measured mass and then divided by the gravimetric mass to determine the percent accuracy of the system.

(7) The cause for any discrepancy greater than ±2 percent must be found and corrected. (For 1991–1995 calendar years, discrepancies greater than ±2 percent are allowed for the methanol test, provided that they do not exceed ±6 percent.)

(8) The Administrator, upon request, may waive the requirement to comply with ±2 percent methanol recovery tolerance, and instead require compliance with a higher tolerance (not to exceed ±6 percent), provided that:

(i) The Administrator determines that compliance with these specified tolerances is not practically feasible; and

(ii) The manufacturer makes information available to the Administrator which indicates that the calibration tests and their results are consistent with good laboratory practice, and that the results are consistent with the results of calibration testing conducted by the Administrator.

[54 FR 14591, Apr. 11, 1989, as amended at 60 FR 34371, June 30, 1995; 63 FR 24449, May 4, 1998]

§ 86.1320–90 Gas meter or flow instrumentation calibration; particulate, methanol, and formaldehyde measurement.

(a) Sampling for particulate, methanol and formaldehyde emissions requires the use of gas meters or flow instrumentation to determine flow through the particulate filters, methanol impingers and formaldehyde impingers. These instruments shall receive initial and periodic calibrations as follows:

(1)(i) Install a calibration device in series with the instrument. A critical flow orifice, a bellmouth nozzle, or a laminar flow element or an NBS traceable flow calibration device is required as the standard device.

(ii) The flow system should be checked for leaks between the calibration and sampling meters, including any pumps that may be part of the system, using good engineering practice.

(2) Flow air through the calibration system at the sample flow rate used for particulate, methanol, and formaldehyde testing and at the backpressure which occurs during the sample test.

(3) When the temperature and pressure in the system have stabilized, measure the indicated gas volume over a time period of at least five minutes or until a gas volume of at least ±1 percent accuracy can be determined by the standard device. Record the stabilized air temperature and pressure upstream of the instrument and as required for the standard device.

(4) Calculate air flow at standard conditions as measured by both the standard device and the instrument(s). (Standard conditions are defined as 6 68 °F (20 °C) and 29.92 in Hg (101.3 kPa).)

(5) Repeat the procedures of paragraphs (a) (2) through (4) of this section using at least two flow rates which bracket the typical operating range.

(6) If the air flow at standard conditions measured by the instrument differs by ±1.0 percent of the maximum operating range or ±2.0 percent of the point (whichever is smaller), then a correction shall be made by either of the following two methods:

(i) Mechanically adjust the instrument so that it agrees with the calibration measurement at the specified flow rates using the criteria of paragraph (a)(6) of this section, or

(ii) Develop a continuous best fit calibration curve for the instrument (as a function of the calibration device flow measurement) from the calibration points to determine corrected flow. The points on the calibration curve relative to the calibration device measurements must be within ±1.0 percent of the maximum operating range of ±2.0 percent of the point (whichever is smaller).

(7) For double dilution systems, the accuracy of the secondary dilution flow measurement device should be within ±1.0 percent of the total flow through the filter.

(b) *Other systems.* A bell prover may be used to calibrate the instrument if the procedure outlined in ANSI B109.1–1973 is used. Prior approval by the Administrator is not required to use the bell prover.

[54 FR 14593, Apr. 11, 1989]

§ 86.1321–90 Hydrocarbon analyzer calibration.

The FID hydrocarbon analyzer shall receive the following initial and periodic calibration. The HFID used with petroleum-fueled diesel engines shall be operated to a set point ±10 °F (±5.5 °C) between 365 and 385 °F (185 and 197 °C). The HFID used with methanol-fueled engines shall be operated at 235±15 °F (113±8 °C).

(a) *Initial and periodic optimization of detector response.* Prior to introduction into service and at least annually thereafter, the FID hydrocarbon analyzer shall be adjusted for optimum hydrocarbon response.

(1) Follow good engineering practices for initial instrument start-up and basic operating adjustment using the

appropriate fuel (see § 86.1314) and zero-grade air.

(2) Optimize the FID's response on the most common operating range. The response is to be optimized with respect to fuel pressure or flow while meeting the analyzer response time given in § 86.1310(b)(3)(vii)(A) for continuous HC measurement. Efforts shall be made to minimize response variations to different hydrocarbon species that are expected to be in the exhaust. Good engineering judgement is to be used to trade off optimal FID response to propane-in-air against reductions in relative responses to other hydrocarbons. A good example of trading off response on propane for relative responses to other hydrocarbon species is given in Society of Automotive Engineers (SAE) Paper No. 770141, ''Optimization of Flame Ionization Detector for Determination of Hydrocarbon in Diluted Automotive Exhausts''; author Glenn D. Reschke. It is also required that the response be set to optimum condition with respect to air flow and sample flow. Heated Flame Ionization Detectors (HFIDs) must be at their specified operating temperature.

(3) One of the following procedures is to be used for FID or HFID optimization:

(i) Use the procedures outlined in Society of Automotive Engineers (SAE) paper No. 770141, ''Optimization of Flame Ionization Detector for Determination of Hydrocarbons in Diluted Automobile Exhaust''; author, Glenn D. Reschke, as an example.

(ii) The HFID optimization procedures outlined in 40 CFR part 86, subpart D, § 86.331–79(c).

(iii) Alternative procedures may be used if approved in advance by the Administrator.

(iv) The procedures specified by the manufacturer of the FID or HFID.

(4) After the optimum fuel, air, and sample pressures or flow rates have been determined, they shall be recorded for future reference.

(b) *Initial and periodic calibration.* Prior to introduction into service and monthly thereafter, the FID or HFID hydrocarbon analyzer shall be calibrated on all normally used instrument ranges. Use the same flow rate and pressures as when analyzing samples. Calibration gases shall be introduced directly at the analyzer, unless the ''overflow'' calibration option of § 86.1310(b)(3)(i) for the HFID is taken.

(1) Adjust analyzer to optimize performance.

(2) Zero the hydrocarbon analyzer with zero-grade air.

(3) Calibrate on each used operating range with a minimum of 6, approximately equally spaced, propane-in-air calibration gases (e.g., 15, 30, 45, 60, 75, and 90 percent of that range). For each range calibrated, if the deviation from a least-squares best-fit straight line is within ±2 percent of the value at each non-zero data point and within ±0.3 percent of full scale on the zero data point, then concentration values may be calculated by using the linear calibration equation for that range. If the deviation exceeds these limits, then the best-fit non-linear equation which represents the data within these limits shall be used to determine concentration values.

(c) *FID response factor to methanol.* When the FID analyzer is to be used for the analysis of hydrocarbon samples containing methanol, the methanol response factor of the analyzer shall be established. The methanol response factor shall be determined at several concentrations in the range of concentrations in the exhaust sample.

(1) The bag sample of methanol for analysis in the FID shall be prepared using the apparatus shown in Figure N90–10. A known volume of methanol is injected, using a microliter syringe, into the heated mixing zone (250 °F (121 °C)) of the apparatus. The methanol is vaporized and swept into the sample bag with a known volume of zero-grade air measured by a dry gas meter.

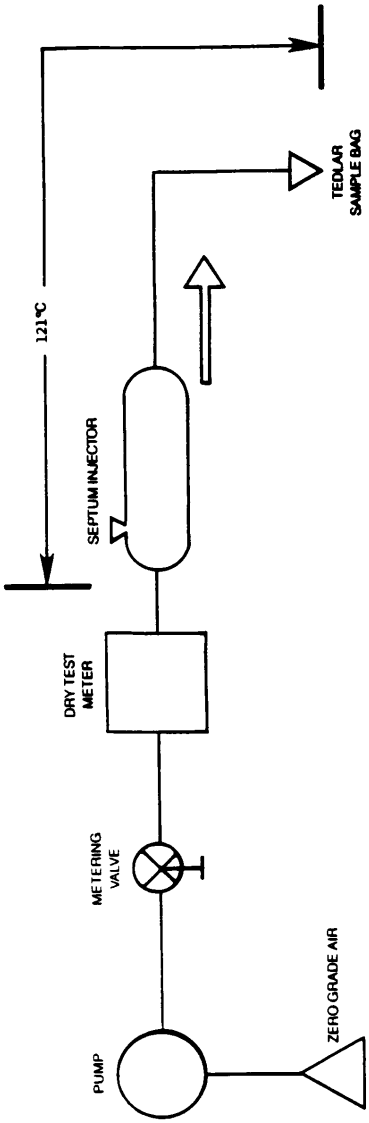

FIGURE N90-10 APPARATUS FOR PREPARATION OF FID METHANOL RESPONSE CALIBRATION MIX

(2) The bag sample is analyzed using the FID.

(3) The FID response factor, r, is calculated as follows:

r = FIDppm/SAMppm

Where:

(i) r = FID response factor.

(ii) FIDppm = FID reading in ppmC.

(iii) SAMppm = methanol concentration in the sample bag in ppmC

$$= \frac{0.02406 \times \text{fuel injected} \times \text{fuel density}}{\text{Air volume} \times \text{mol. wt. } CH_3OH}$$

Where:

(iv) 0.02406 = volume of one mole at 29.92 in Hg and 68 °F, m^3.

(v) Fuel injected = volume of methanol injected, ml.

(vi) Fuel density = density of methanol, 0.7914 g/ml.

(vii) Air volume = volume of zero-grade air, m^3.

(viii) Mol. Wt. CH_3OH = 32.04.

[54 FR 14594, Apr. 11, 1989, as amended at 62 FR 47128, Sept. 5, 1997]

§86.1321–94 Hydrocarbon analyzer calibration.

The FID hydrocarbon analyzer shall receive the following initial and periodic calibration. The HFID used with petroleum-fueled, natural gas-fueled and liquefied petroleum gas-fueled diesel engines shall be operated to a set point ±10 °F (±5.5 °C) between 365 and 385 °F (185 and 197 °C). The HFID used with methanol-fueled engines shall be operated at 235 ±15 °F (113 ±8 °C).

(a) Initial and periodic optimization of detector response. Prior to introduction into service and at least annually thereafter, the FID hydrocarbon analyzer shall be adjusted for optimum hydrocarbon response.

(1) Follow good engineering practices for initial instrument start-up and basic operating adjustment using the appropriate fuel (see §86.1314) and zero-grade air.

(2) Optimize the FID's response on the most common operating range. The response is to be optimized with respect to fuel pressure or flow while meeting the analyzer response time given in §86.1310(b)(3)(vii)(A) for continuous HC measurement. Efforts shall be made to minimize response variations to different hydrocarbon species that are expected to be in the exhaust. Good engineering judgement is to be used to trade off optimal FID response to propane-in-air against reductions in relative responses to other hydrocarbons. A good example of trading off response on propane for relative responses to other hydrocarbon species is given in Society of Automotive Engineers (SAE) Paper No. 770141, ''Optimization of Flame Ionization Detector for Determination of Hydrocarbon in Diluted Automotive Exhausts''; author Glenn D. Reschke. It is also required that the response be set to optimum condition with respect to air flow and sample flow. Heated Flame Ionization Detectors (HFIDs) must be at their specified operating temperature.

(3) One of the following procedures is to be used for FID or HFID optimization:

(i) Use the procedures outlined in Society of Automotive Engineers (SAE) paper number 770141, ''Optimization of Flame Ionization Detector for Determination of Hydrocarbons in Diluted Automobile Exhaust''; author, Glenn D. Reschke, as an example. Available from Society of Automotive Engineers International, 400 Commonwealth Dr., Warrendale, PA 15096–0001.

(ii) The procedure listed in subpart D, §86.331–79(c) of this part.

(iii) The procedures specified by the manufacturer of the FID or HFID.

(iv) Alternative procedures may be used if approved in advance by the Administrator.

(4) After the optimum fuel, air and sample pressures or flow rates have been determined, they shall be recorded for future reference.

(b) *Initial and periodic calibration*. Prior to introduction into service and monthly thereafter, the FID or HFID hydrocarbon analyzer shall be calibrated on all normally used instrument ranges. Use the same flow rate and pressures as when analyzing samples. Calibration gases shall be introduced directly at the analyzer, unless the ''overflow'' calibration option of §86.1310(b)(3)(i) for the HFID is taken.

(1) Adjust analyzer to optimize performance.

(2) Zero the hydrocarbon analyzer with zero-grade air.

(3) Calibrate on each used operating range with a minimum of 6, approximately equally spaced, propane-in-air calibration gases (e.g., 15, 30, 45, 60, 75, and 90 percent of that range). For each range calibrated, if the deviation from a least-squares best-fit straight line is within ±2 percent of the value at each non-zero data point and within ±0.3 percent of full scale on the zero data point, then concentration values may be calculated by using the linear calibration equation for that range. If the deviation exceeds these limits, then the best-fit non-linear equation which represents the data within these limits shall be used to determine concentration values.

(c) *FID response factor to methanol.* When the FID analyzer is to be used for the analysis of hydrocarbon samples containing methanol, the methanol response factor of the analyzer shall be established. The methanol response factor shall be determined at several concentrations in the range of concentrations in the exhaust sample, using either bag samples or gas bottles meeting the requirements of § 86.1314.

(1) The bag sample of methanol for analysis in the FID, if used, shall be prepared using the apparatus shown in Figure N94–10. A known volume of methanol is injected, using a microliter syringe, into the heated mixing zone (250 °F (121 °C)) of the apparatus. The methanol is vaporized and swept into the sample bag with a known volume of zero grade air measured by a gas flow meter meeting the specifications of § 86.1320.

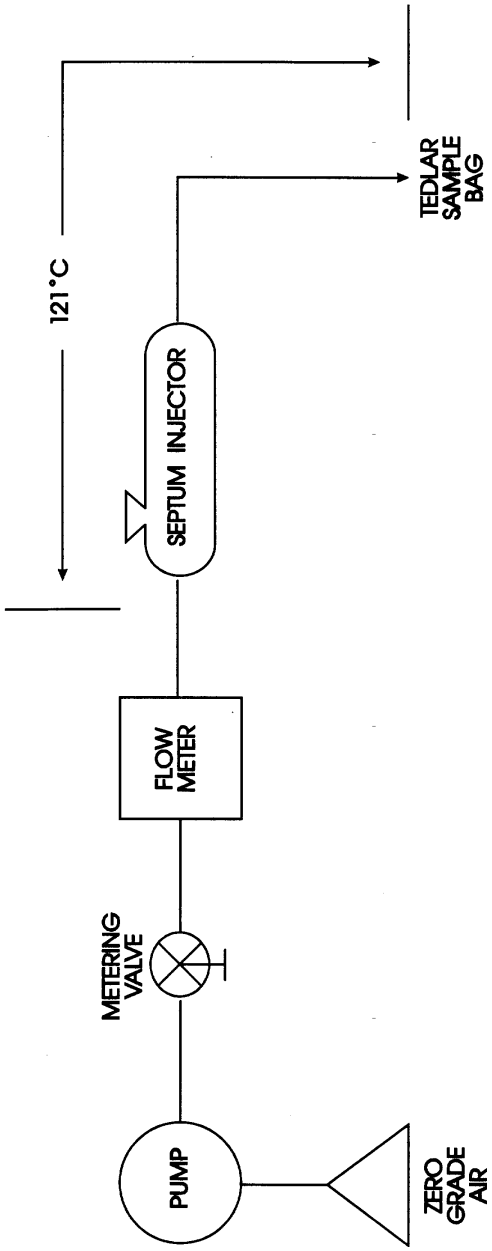

FIGURE N94-10 APPARATUS FOR PREPARATION OF FID METHANOL RESPONSE CALIBRATION MIX

(2) The bag sample is analyzed using the FID.

(3) The FID response factor, r, is calculated as follows:

r=FIDppm/SAMppm

Where:

(i) r=FID response factor.

(ii) FIDppm=FID reading in ppmC.

(iii) SAMppm=methanol concentration in the sample bag, or gas bottle, in ppmC. SAMppm for sample bags:

$$= \frac{0.02406 \times \text{Fuel injected} \times \text{Fuel density}}{\text{Air volume} \times \text{Mol. Wt. } CH_3OH}$$

Where:

(iv) 0.02406=volume of one mole at 29.92 in Hg and 68 °F, m^3.

(v) Fuel injected = volume of methanol injected, ml.

(vi) Fuel density=density of methanol, 0.7914 g/ml.

(vii) Air volume=volume of zero-grade air, m^3.

(viii) Mol. Wt. CH3OH=32.04.

(d) *FID response factor to methane.* When the FID analyzer is to be used for the analysis of natural gas-fueled vehicle hydrocarbon samples, the methane response factor of the analyzer shall be established. To determine the total hydrocarbon FID response to methane, known methane in air concentrations traceable to National Institute of Standards and Technology (NIST) shall be analyzed by the FID. Several methane concentrations shall be analyzed by the FID in the range of concentrations in the exhaust sample. The total hydrocarbon FID response to methane is calculated as follows:

r_{CH4}=FIDppm/SAMppm

Where:

(1) r_{CH4}=FID response factor to methane.

(2) FIDppm=FID reading in ppmC.

(3) SAMppm=the known methane concentration in ppmC.

[59 FR 48531, Sept. 21, 1994, as amended at 60 FR 34371, June 30, 1995; 62 FR 47128, Sept. 5, 1997]

§ 86.1322–84 Carbon monoxide analyzer calibration.

The NDIR carbon monoxide analyzer shall receive the following initial and periodic calibration.

(a) *Initial and periodic interference check.* Prior to its introduction into service and annually thereafter, the NDIR carbon monoxide analyzer shall be checked for response to water vapor and CO_2:

(1) Follow good engineering practices for instrument start-up and operation. Adjust the analyzer to optimize performance on the most sensitive range to be used.

(2) Zero the carbon monoxide analyzer with either zero-grade air or zero-grade nitrogen.

(3) Bubble a mixture of 3 percent CO_2 in N_2 through water at room temperature and record analyzer response.

(4) An analyzer response of more than 1 percent of full scale for ranges above 300 ppm full scale or more than 3 ppm on ranges below 300 ppm full scale requires corrective action. (Use of conditioning columns is one form of corrective action which may be taken.)

(b) *Initial and periodic calibration.* Prior to its introduction into service and monthly thereafter, the NDIR carbon monoxide analyzer shall be calibrated.

(1) Adjust the analyzer to optimize performance.

(2) Zero the carbon monoxide analyzer with either zero-grade air or zero-grade nitrogen.

(3) Calibrate on each used operating range with a minimum of 6, approximately equally spaced, carbon monoxide-in-N_2 calibration gases (e.g., 15, 30, 45, 60, 75, and 90 percent of that range). For each range calibrated, if the deviation from a least-squares best-fit straight line is within ±2 percent of the value at each non-zero data point and within ±0.3 percent of full scale on the zero data point, then concentration values may be calculated by using the linear calibration equation for that range. If the deviation exceeds these limits, then the best-fit not-linear equation which represents the data within these limits shall be used to determine concentration values.

(c) The initial and periodic interference, system check, and calibration test procedures specified in 40 CFR part 86, subpart D may be used in lieu of the procedures specified in this section.

[48 FR 52210, Nov. 16, 1983, as amended at 62 FR 47128, Sept. 5, 1997]

§ 86.1323–84 Oxides of nitrogen analyzer calibration.

The chemiluminescent oxides of nitrogen analyzer shall receive the following initial and periodic calibration.

(a) Prior to introduction into service and at least monthly thereafter, the chemiluminescent oxides of nitrogen

analyzer must be checked for NO2 to NO converter efficiency. Figure N84–9 is a reference for paragraphs (a) (1) through (11) of this section.

(1) Follow good engineering practices for instrument start-up and operation. Adjust the analyzer to optimize performance.

(2) Zero the oxides of nitrogen analyzer with zero-grade air or zero-grade nitrogen.

(3) Connect the outlet of the NO_X generator to the sample inlet of the oxides of nitrogen analyzer which has been set to the most common operating range.

(4) Introduce into the NO_X generator analyzer-system an NO-in-nitrogen (N_2) mixture with an NO concentration equal to approximately 80 percent of the most common operating range. The NO_2 content of the gas mixture shall be less than 5 percent of the NO concentration.

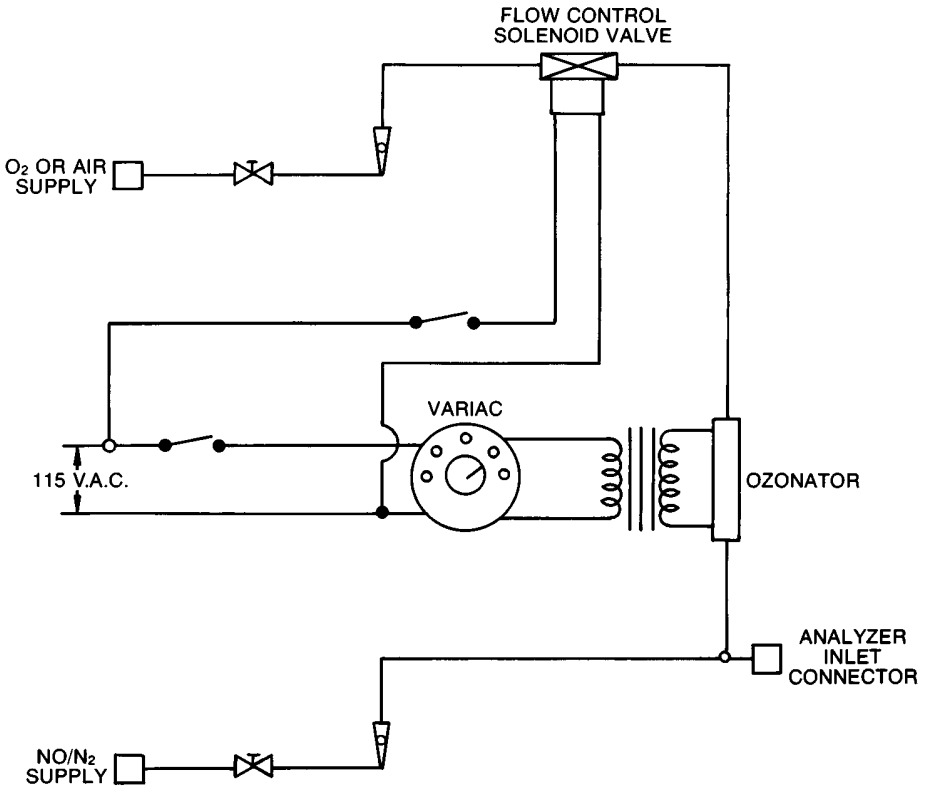

(SEE FIG. N84-5 FOR SYMBOL LEGEND)

FIGURE N84-9 — NO_x CONVERTER EFFICIENCY DETECTOR

(5) With the oxides of nitrogen analyzer in the NO mode, record the concentration of NO indicated by the analyzer.

(6) Turn on the NO_X generator O_2 (or air) supply and adjust the O_2 (or air) flow rate so that the NO indicated by the analyzer is about 10 percent less than indicated in paragraph (a)(5) of this section. Record the concentration of NO in this NO + O_2 mixture.

(7) Switch the NO_X generator to the generation mode and adjust the generation rate so that the NO measured on the analyzer is 20 percent of that measured in paragraph (a)(5) of this section. There must be at least 10 percent unreacted NO at this point. Record the concentration of residual NO.

(8) Switch the oxides of nitrogen analyzer to the NO_X mode and measure total NO_X. Record this value.

(9) Switch off the NO_X generator but maintain gas flow through the system. The oxides of nitrogen analyzer will indicate the NO_X in the NO + O_2 mixture. Record this value.

(10) Turn off the NO_X generator O_2 (or air) supply. The analyzer will now indicate the NO_X in the original NO-in-N_2 mixture. This value should be no more than 5 percent above the value indicated in paragraph (a)(4) of this section.

(11) Calculate the efficiency of the NO_X converter by substituting the concentrations obtained into the following equation:

$$\text{Percent efficiency} = \left(1 + \frac{a-b}{c-d}\right) \times 100$$

Where:

a = concentration obtained in paragraph (a)(8),
b = concentration obtained in paragraph (a)(9),
c = concentration obtained in paragraph (a)(6),
d = concentration obtained in paragraph (a)(7).

If converter efficiency is not greater than 90 percent corrective action will be required.

(b) *Initial and periodic calibration.* Prior to its introduction into service and monthly thereafter, the chemiluminescent oxides of nitrogen analyzer shall be calibrated on all normally used instrument ranges. Use the same flow rate as when analyzing samples. Proceed as follows:

(1) Adjust analyzer to optimize performance.

(2) Zero the oxides of nitrogen analyzer with zero-grade air or zero-grade nitrogen.

(3) Calibrate on each used operating range with a minimum of 6, approximately equally spaced, NO-in-N_2 calibration gases (e.g., 15, 30, 45, 60, 75, and 90 percent of that range). For each range calibrated, if the deviation from a least-squares best-fit straight line is within ±2 percent of the value at each non-zero data point and within ±0.3 percent of full scale on the zero data point, then concentration values may be calculated using the linear calibration equation for that range. If the deviation exceeds these limits, then the best-fit non-linear equation which represents the data within these limits shall be used to determine concentration values.

(c) The initial and periodic interference, system check, and calibration test procedures specified in 40 CFR part 86, subpart D, may be used in lieu of the procedures specified in this section.

(d) When testing methanol-fueled engines it may be necessary to clean the analyzer frequently to prevent interference with NO_X measurements (see EPA/60/S3–88/040).

[48 FR 52210, Nov. 16, 1983, as amended at 49 FR 48144, Dec. 10, 1984; 58 FR 58426, Nov. 1, 1993; 60 FR 34374, June 30, 1995; 62 FR 47129, Sept. 5, 1997]

§ 86.1324–84 Carbon dioxide analyzer calibration.

Prior to its introduction into service and monthly thereafter, the NDIR carbon dioxide analyzer shall be calibrated as follows:

(a) Follow good engineering practices for instrument start-up and operation. Adjust the analyzer to optimize performance.

(b) Zero the carbon dioxide analyzer with either zero-grade air or zero-grade nitrogen.

(c) Calibrate on each used operating range with a minimum of 6, approximately equally spaced, carbon dioxide-in-N_2 calibration or span gases (e.g., 15, 30, 45, 60, 75, and 90 percent of that range). For each range calibrated, if the deviation from a least-squares best-fit straight line is within ±2 percent or

less of the value at each non-zero data point and within ±0.3 percent of full scale on the zero data point, then concentration values may be calculated by using the linear calibration equation for that range. If the deviation exceeds these limits, then the best-fit non-linear equation which represents the data within these limits shall be used to determine concentration values.

(d) The initial and periodic interference, system check, and calibration test procedures specified in 40 CFR part 86, subpart D, may be used in lieu of the procedures in this section.

[48 FR 52210, Nov. 16, 1983, as amended at 62 FR 47129, Sept. 5, 1997]

§86.1325–94 Methane analyzer calibration.

Prior to introduction into service and monthly thereafter, the methane analyzer shall be calibrated:

(a) Follow the manufacturer's instructions for instrument startup and operation. Adjust the analyzer to optimize performance.

(b) Zero the methane analyzer with zero-grade air.

(c) Calibrate on each used operating range with a minimum of 6, approximately equally spaced, CH4 in air calibration gases (e.g., 15, 40, 45, 60, 75, and 90 percent of that range). For each range calibrated, if the deviation from a least-squares best-fit straight line is within ±2 percent of the value at each non-zero data point and within ±0.3 percent of full scale on the zero data point, then concentration values may be calculated by using the linear calibration equation for that range. If the deviation exceeds these limits, then the best-fit non-linear equation which represents the data within these limits shall be used to determine concentration values.

[59 FR 48531, Sept. 21, 1994, as amended at 62 FR 47129, Sept. 5, 1997]

§86.1326–90 Calibration of other equipment.

Other test equipment used for testing shall be calibrated as often as required by the manufacturer or as necessary according to good practice. Specific equipment requiring calibration is the gas chromatograph and flame ionization detector used in measuring methanol and the high pressure liquid chromatograph (HPLC) and ultraviolet detector for measuring formaldehyde.

[54 FR 14596, Apr. 11, 1989]

§86.1327–90 Engine dynamometer test procedures; overview.

(a) The engine dynamometer test procedure is designed to determine the brake specific emissions of hydrocarbons, nonmethane hydrocarbons carbon monoxide, oxides of nitrogen, particulate, methanol and formaldehyde, as applicable. The test procedure consists of a ''cold'' start test following either natural or forced cool-down periods described in §§86.1334 and 86.1335, respectively. A ''hot'' start test follows the ''cold'' start test after a hot soak of 20 minutes. The idle test of subpart P of this part may be run after the ''hot'' start test. The exhaust emissions are diluted with ambient air and a continuous proportional sample is collected for analysis during both the cold- and hot-start tests. The composite samples collected are analyzed either in bags or continuously for hydrocarbons (HC), methane (CH_4—as applicable), carbon monoxide (CO), carbon dioxide (CO_2), and oxides of nitrogen (NO_X), or in sample collection impingers for methanol (CH_3OH) and sample collection impingers (or cartridges) for formaldehyde (HCHO). Measurement of CH_3OH and HCHO may be omitted for 1990 through 1994 model year methanol-fueled engines when a FID calibrated on methanol is used. A bag or continuous sample of the dilution air is similarly analyzed for background levels of hydrocarbon, carbon monoxide, carbon dioxide, and oxides of nitrogen and, if appropriate, methane and/or methanol and/or formaldehyde. In addition, for diesel-cycle engines, particulates are collected on fluorocarbon-coated glass fiber filters or fluorocarbon-based (membrane) filters, and the dilution air may be prefiltered.

(b) Engine torque and rpm command set points shall be issued at 5 (10 Hz recommended) Hz or greater during both the cold and hot start tests. Feedback engine torque and rpm shall be recorded at least once every second during the test.

(c) Using the torque and rpm feedback signals the brake horsepower is

integrated with respect to time for the cold and hot cycles. This produces a brake horsepower-hour value that enables the brake-specific emissions to be determined (*see* § 86.1342, Calculations; gaseous exhaust emissions., and § 86.1343, Calculations; particulate exhaust emissions.).

(d)(1) When an engine is tested for exhaust emissions or is operated for service accumulation on an engine dynamometer, the complete engine shall be tested, with all emission control devices installed and functioning.

(2) Evaporative emission controls need not be connected if data are provided to show that normal operating conditions are maintained in the engine induction system.

(3) On air-cooled engines, the fan shall be installed.

(4) Additional accessories (*e.g.,* oil cooler, alternators, air compressors, etc.) may be installed or their loading simulated if typical of the in-use application.

(5) The engine may be equipped with a production type starter.

(e) Means of engine cooling which will maintain the engine operating temperatures (*e.g.,* temperatures of intake air, oil, water, etc.) at approximately the same temperature as specified by the manufacturer shall be used. Auxiliary fan(s) may be used to maintain engine cooling during operation on the dynamometer. Rust inhibitors and lubrication additives may be used, up to the levels recommended by the additive manufacturer. Antifreeze mixtures and other coolants typical of those approved for use by the manufacturer may be used.

(f) *Exhaust system.* The exhaust system shall meet the following requirements:

(1) *Gasoline-fueled and methanol-fueled Otto-cycle engines.* A chassis-type exhaust system shall be used. For all catalyst systems, the distance from the exhaust manifold flange(s) to the catalyst shall be the same as in the vehicle configuration unless the manufacturer provides data showing equivalent performance at another location. The catalyst container may be removed during all test sequences prior to the practice cycle, and replaced with an equivalent container having an inactive catalyst support.

(2) *Petroleum-fueled and methanol-fueled diesel engines.* Either a chassis-type or a facility-type exhaust system or both systems simultaneously may be used. If the engine is equipped with an exhaust aftertreatment device, the exhaust pipe must be the same diameter as found in-use for at least 4 pipe diameters upstream to the inlet of the beginning of the expansion section containing the aftertreatment device. The exhaust backpressure or restriction shall follow the same criteria as in § 86.1330–90(f) and may be set with a valve (muffler omitted). The catalyst container may be removed during all test sequences prior to the practice cycle, and replaced with an equivalent container having an inactive catalyst support.

(i) The engine exhaust system shall meet the following requirements:

(A) The total length of the tubing from the exit of the engine exhaust manifold, turbocharger outlet or aftertreatment device to the primary dilution tunnel shall not exceed 32 feet (9.8 m).

(B) The initial portion of the exhaust system may consist of a typical in-use (i.e., length, diameter, material, etc.) chassis-type exhaust system.

(C) The distance from the exhaust manifold flange(s) or turbocharger outlet to any exhaust aftertreatment device shall be the same as in the vehicle configuration or within the distance specifications provided by the manufacturer.

(D) For engines which are not equipped with exhaust aftertreatment devices, all tubing in excess of 12 feet (3.7 m) from the exit of the turbocharger or exhaust manifold shall be insulated. For engines equipped with exhaust aftertreatment devices, all tubing after the aftertreatment device which is in excess of 12 feet (3.7 m) shall be insulated.

(E) If the tubing is required to be insulated, the radial thickness of the insulation must be at least 1.0 inch (25 mm). The thermal conductivity of the insulating material must have a value no greater than 0.75 BTU-in/hr/ft^2/°F (0.065 W/m-K) measured at 700 °F (371 °C).

(F) A smoke meter or other instrumentation may be inserted into the exhaust system tubing. If this option is exercised in the insulated portion of the tubing, then a minimal amount of tubing not to exceed 18 inches may be left uninsulated. However, no more than 12 feet (3.66 m) of tubing can be left uninsulated in total, including the length at the smoke meter.

(ii) The facility-type exhaust system shall meet the following requirements:

(A) It must be composed of smooth tubing made of typical in-use steel or stainless steel. This tubing shall have a maximum inside diameter of 6.0 in (15 cm).

(B) Short sections (altogether not to exceed 20 percent of the entire tube length) of flexible tubing at connection points are allowed.

[54 FR 14596, Apr. 11, 1989, as amended at 60 FR 34374, June 30, 1995; 62 FR 47129, Sept. 5, 1997]

§86.1327–94 Engine dynamometer test procedures; overview.

(a) The engine dynamometer test procedure is designed to determine the brake specific emissions of hydrocarbons, nonmethane hydrocarbons (for natural gas-fueled engines only), carbon monoxide, oxides of nitrogen, particulate (petroleum-fueled, natural gas-fueled, liquefied petroleum gas-fueled and methanol-fueled diesel engines), and methanol and formaldehyde (for methanol-fueled diesel engines). The test procedure consists of a ''cold'' start test following either natural or forced cool-down periods described in §§86.1334 and 86.1335, respectively. A ''hot'' start test follows the ''cold'' start test after a hot soak of 20 minutes. The idle test of subpart P may be run after the ''hot'' start test. The exhaust emissions are diluted with ambient air and a continuous proportional sample is collected for analysis during both the cold- and hot-start tests. The composite samples collected are analyzed either in bags or continuously for hydrocarbons (HC), methane (CH_4—for natural gas-fueled engines only), carbon monoxide (CO), carbon dioxide (CO_2), and oxides of nitrogen (NO_X), or in sample collection impingers for methanol (CH_3OH) and sample collection impingers (or capsules) for formaldehyde (HCHO). Measurement of CH_3OH and HCHO may be omitted for 1990 through 1994 model year methanol-fueled engines when a FID calibrated on methanol is used. A bag or continuous sample of the dilution air is similarly analyzed for background levels of hydrocarbon, methane, carbon monoxide, carbon dioxide and oxides of nitrogen and, if appropriate, methanol and formaldehyde. In addition, for petroleum-fueled, natural gas-fueled, liquefied petroleum gas-fueled and methanol-fueled diesel engines, particulates are collected on fluorocarbon-coated glass fiber filters or fluorocarbon-based (membrane) filters, and the dilution air may be prefiltered.

(b) Engine torque and rpm command set points shall be issued at 5 (10 Hz recommended) Hz or greater during both the cold and hot start tests. Feedback engine torque and rpm shall be recorded at least once every second during the test.

(c) Using the torque and rpm feedback signals the brake horsepower is integrated with respect to time for the cold and hot cycles. This produces a brake horsepower-hour value that enables the brake-specific emissions to be determined (see §86.1342, Calculations, gaseous exhaust emissions; and §86.1343, Calculations, particulate exhaust emissions).

(d)(1) When an engine is tested for exhaust emissions or is operated for service accumulation on an engine dynamometer, the complete engine shall be tested, with all emission control devices installed and functioning.

(2) Evaporative emission controls need not be connected if data are provided to show that normal operating conditions are maintained in the engine induction system.

(3) On air-cooled engines, the fan shall be installed.

(4) Additional accessories (*e.g.*, oil cooler, alternators, air compressors, etc.) may be installed or their loading simulated if typical of the in-use application.

(5) The engine may be equipped with a production type starter.

(e) Means of engine cooling which will maintain the engine operating

temperatures (*e.g.*, temperatures of intake air, oil, water, etc.) at approximately the same temperature as specified by the manufacturer shall be used. Auxiliary fan(s) may be used to maintain engine cooling during operation on the dynamometer. Rust inhibitors and lubrication additives may be used, up to the levels recommended by the additive manufacturer. Antifreeze mixtures and other coolants typical of those approved for use by the manufacturer may be used.

(f) *Exhaust system.* The exhaust system shall meet the following requirements:

(1) *Otto-cycle engines.* A chassis-type exhaust system shall be used. For all catalyst systems, the distance from the exhaust manifold flange(s) to the catalyst shall be the same as in the vehicle configuration unless the manufacturer provides data showing equivalent performance at another location. The catalyst container may be removed during all test sequences prior to the practice cycle, and replaced with an equivalent container having an inactive catalyst support.

(2) *Diesel engines.* Either a chassis-type or a facility-type exhaust system or both systems simultaneously may be used. If the engine is equipped with an exhaust aftertreatment device, the exhaust pipe must be the same diameter as found in-use for at least 4 pipe diameters upstream to the inlet of the beginning of the expansion section containing the aftertreatment device. The exhaust backpressure or restriction shall follow the same criteria as in § 86.1330–90 (f) and may be set with a valve (muffler omitted). The catalyst container may be removed during all test sequences prior to the practice cycle, and replaced with an equivalent container having an inactive catalyst support.

(i) The engine exhaust system shall meet the following requirements:

(A) The total length of the tubing from the exit of the engine exhaust manifold, turbocharger outlet or aftertreatment device to the primary dilution tunnel shall not exceed 32 feet (9.8 m).

(B) The initial portion of the exhaust system may consist of a typical in-use (i.e., length, diameter, material, etc.) chassis-type exhaust system.

(C) The distance from the exhaust manifold flange(s) or turbocharger outlet to any exhaust aftertreatment device shall be the same as in the vehicle configuration or within the distance specifications provided by the manufacturer.

(D) For engines which are not equipped with exhaust aftertreatment devices, all tubing in excess of 12 feet (3.7 m) from the exit of the turbocharger or exhaust manifold shall be insulated. For engines equipped with exhaust aftertreatment devices, all tubing after the aftertreatment device which is in excess of 12 feet (3.7 m) shall be insulated.

(E) If the tubing is required to be insulated, the radial thickness of the insulation must be at least 1.0 inch (25 mm). The thermal conductivity of the insulating material must have a value no greater than 0.75 BTU-in/hr/ft^2/°F (0.065 W/m–K) measured at 700 °F (371 °C).

(F) A smoke meter or other instrumentation may be inserted into the exhaust system tubing. If this option is exercised in the insulated portion of the tubing, then a minimal amount of tubing not to exceed 18 inches may be left uninsulated. However, no more than 12 feet (3.66 m) of tubing can be left uninsulated in total, including the length at the smoke meter.

(ii) The facility-type exhaust system shall meet the following requirements:

(A) It must be composed of smooth tubing made of typical in-use steel or stainless steel. This tubing shall have a maximum inside diameter of 6.0 in (15 cm).

(B) Short sections (altogether not to exceed 20 percent of the entire tube length) of flexible tubing at connection points are allowed.

[59 FR 48532, Sept. 21, 1994, as amended at 62 FR 47129, Sept. 5, 1997]

§ 86.1327–96 Engine dynamometer test procedures; overview.

(a) The engine dynamometer test procedure is designed to determine the brake specific emissions of hydrocarbons, nonmethane hydrocarbons, carbon monoxide, oxides of nitrogen,

particulate, methanol and formaldehyde, as applicable. The test procedure consists of a ''cold'' start test following either natural or forced cool-down periods described in §§ 86.1334 and 86.1335, respectively. A ''hot'' start test follows the ''cold'' start test after a hot soak of 20 minutes. The idle test of subpart P of this part may be run after the ''hot'' start test. The exhaust emissions are diluted with ambient air and a continuous proportional sample is collected for analysis during both the cold- and hot-start tests. The composite samples collected are analyzed either in bags or continuously for hydrocarbons (HC), methane (CH_4) carbon monoxide (CO), carbon dioxide (CO_2), and oxides of nitrogen (NO_X), or in sample collection impingers for methanol (CH_3OH) and sample collection impingers (or cartridges) for formaldehyde (HCHO), as applicable. Measurement of CH_3OH and HCHO may be omitted for 1990 through 1994 model year methanol-fueled engines when a FID calibrated on methanol is used. A bag or continuous sample of the dilution air is similarly analyzed for background levels of hydrocarbon, carbon monoxide, carbon dioxide, and oxides of nitrogen and, if appropriate, methane and/or methanol and/or formaldehyde. In addition, for diesel-cycle engines, particulates are collected on fluorocarbon-coated glass fiber filters or fluorocarbon-based (membrane) filters, and the dilution air may be prefiltered.

(b) Engine torque and rpm command set points shall be issued at 5 (10 Hz recommended) Hz or greater during both the cold and hot start tests. Feedback engine torque and rpm shall be recorded at least once every second during the test.

(c) Using the torque and rpm feedback signals, integrate the brake horsepower with respect to time for the cold and hot cycles. This produces a brake horsepower-hour value that enables the brake-specific emissions to be determined (see §§ 86.1342 and 86.1343).

(d)(1) When an engine is tested for exhaust emissions or is operated for service accumulation on an engine dynamometer, the complete engine shall be tested, with all emission control devices installed and functioning.

(2) For gasoline- and methanol-fueled engines, evaporative emission canisters must be loaded with fuel vapors and connected to the engine. The canisters used for testing must be of the same design as those used in engine applications.

(3) On air-cooled engines, the fan shall be installed.

(4) Additional accessories (e.g., oil cooler, alternators, air compressors, etc.) may be installed or their loading simulated if typical of the in-use application.

(5) The engine may be equipped with a production-type starter.

(e) Means of engine cooling that will maintain the engine operating temperatures (e.g., temperatures of intake air, oil, water, etc.) at approximately the same temperature as specified by the manufacturer shall be used. An auxiliary fan(s) may be used to maintain engine cooling during operation on the dynamometer. Rust inhibitors and lubrication additives may be used, up to the levels recommended by the additive manufacturer. Antifreeze mixtures and other coolants typical of those approved for use by the manufacturer may be used.

(f) *Exhaust system.* The exhaust system term shall meet the following requirements:

(1) *Gasoline-fueled and methanol-fueled Otto-cycle engines.* A chassis-type exhaust system shall be used. For all catalyst systems, the distance from the exhaust manifold flange(s) to the catalyst shall be the same as in the vehicle configuration unless the manufacturer provides data showing equivalent performance at another location. The catalyst container may be removed during all test sequences prior to the practice cycle, and replaced with an equivalent container having an inactive catalyst support.

(2) Petroleum-fueled and methanol-fueled diesel engines. Either a chassis-type or a facility-type exhaust system or both systems simultaneously may be used. If the engine is equipped with an exhaust aftertreatment device, the exhaust pipe must be the same diameter as found in-use for at least 4 pipe diameters upstream to the inlet of the beginning of the expansion section containing the aftertreatment device. The

exhaust backpressure or restriction shall follow the same criteria as in § 86.1330–90(f) and may be set with a valve (muffler omitted). The catalyst container may be removed during all test sequences prior to the practice cycle, and replaced with an equivalent container having an inactive catalyst support.

(i) The engine exhaust systems shall meet the following requirements:

(A) The total length of the tubing from the exit of the engine exhaust manifold, turbocharger outlet or aftertreatment device to the primary dilution tunnel shall not exceed 32 feet (9.8 m).

(B) The initial portion of the exhaust system may consist of a typical in-use (i.e., length, diameter, material, etc.) chassis-type exhaust system.

(C) The distance from the exhaust manifold flange(s) or turbocharger outlet to any exhaust aftertreatment device shall be the same as in the vehicle configuration or within the distance specifications provided by the manufacturer.

(D) For engines which are not equipped with exhaust aftertreatment devices, all tubing in excess of 12 feet (3.7 m) from the exit of the turbocharger or exhaust manifold shall be insulated. For engines equipped with exhaust aftertreatment devices, all tubing after the aftertreatment device which is in excess of 12 feet (3.7 m) shall be insulated.

(E) If the tubing is required to be insulated, the radial thickness of the insulation must be at least 1.0 inch (25 mm). The thermal conductivity of the insulating material must have a value no greater than 0.75 BTU-in/hr/ft^2/°F (0.065 W/m–K) measured at 700 °F (371 °C).

(F) A smoke meter or other instrumentation may be inserted into the exhaust system tubing. If this option is exercised in the insulated portion of the tubing, then a minimal amount of tubing not to exceed 18 inches may be left uninsulated. However, no more than 12 feet (3.66 m) of tubing can be left uninsulated in total, including the length at the smoke meter.

(ii) The facility-type exhaust system shall meet the following requirements:

(A) It must be composed of smooth tubing made of typical in-use steel or stainless steel. This tubing shall have a maximum inside diameter of 6.0 in (15 cm).

(B) Short sections (altogether not to exceed 20 percent of the entire tube length) of flexible tubing at connection points are allowed.

[58 FR 16064, Mar. 24, 1993, as amended at 59 FR 48533, Sept. 21, 1994; 60 FR 34374, June 30, 1995; 62 FR 47130, Sept. 5, 1997]

§ 86.1327–98 Engine dynamometer test procedures; overview.

Section 86.1327–98 includes text that specifies requirements that differ from § 86.1327–96. Where a paragraph in § 86.1327–96 is identical and applicable to § 86.1327–98, this may be indicated by specifying the corresponding paragraph and the statement ''[Reserved]. For guidance see § 86.1327–96''.

(a) through (d)(3) [Reserved]. For guidance see § 86.1327–96.

(d)(4) Additional accessories (e.g., oil cooler, alternators, air compressors, etc.) may be installed or their loading simulated if typical of the in-use application. This loading shall be parasitic in nature and, if used, shall be applied during all engine testing operations, including mapping. The accessory work performed shall not be included in the integrated work used in emissions calculations.

(d)(5) through (f) [Reserved]. For guidance see § 86.1327–96.

[62 FR 47130, Sept. 5, 1997]

§ 86.1330–84 Test sequence; general requirements.

(a) The test sequence shown in Figure N84–10 shows the major steps of the test procedure.

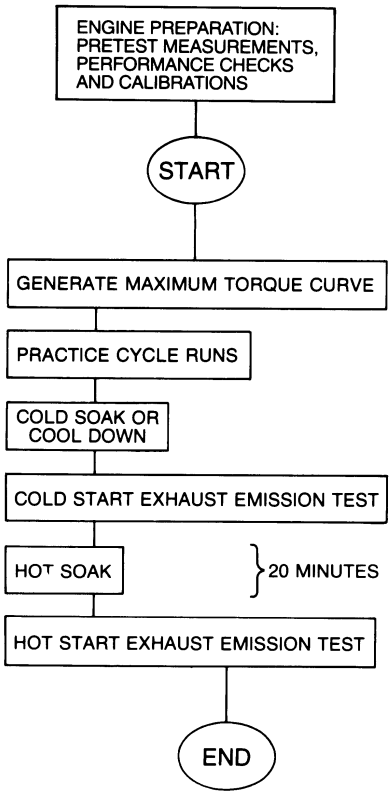

FIGURE N84-10—TEST SEQUENCE

(b) *Control of Air Temperature.* (1) The temperature of the CVS dilution air shall be maintained above 68 °F (20 °C) for Otto cycle engines and between 68 °F and 86 °F (20 °C and 30 °C) for diesel cycle engines throughout the test sequence, except as permitted by §86.1335–84.

(2) For engines with auxiliary emission control devices which sense or detect ambient air temperature and operate at 68 °F or higher, the test cell ambient air temperature and the temperature of the engine intake air shall be maintained at 77 °F ±9 °F (25 °C ±5 °C) throughout the test sequence. For engines with auxiliary emission control devices which are temperature dependent and operate at 68 °F or higher, the temperature of the engine intake air shall be maintained at 77 °F ±9 °F (25 °C ±5 °C) throughout the test sequence.

(3) For engines which are not equipped with temperature dependent auxiliary emission control devices, the test cell ambient air temperature and the temperature of the engine intake air shall be greater than 20° C (68° F). No corrections will be made in test results or measured engine power if 30° C (86° F) is exceeded.

(4) The only exceptions to these temperatures are as noted in §86.1335–84.

(5) For engines equipped with an air-to-air intercooler (or any other low temperature charge air cooling device) between the turbocharger compressor and the intake manifold, the procedure for simulating the device in the transient dynamometer test facilities shall follow the SAE Recommended Practice J1937, ''Engine Testing with Low Temperature Charge Air Cooling System in a Dynamometer Test Cell.''

(c) No control of ambient air, engine intake air or CVS dilution air humidity is required.

(d) The idle test of subpart P may be run after completion of the hot start exhaust emission test, if applicable.

(e) The barometric pressure observed during the generation of the maximum torque curve shall not deviate more than 1 inch Hg from the value measured at the beginning of the map. The average barometric pressure observed during the exhaust emission test must be within 1 inch Hg of the average observed during the maximum torque curve generation.

(f) *Diesel-Fueled Engines only.* (1)(i) Air inlet restriction shall be set to a value midway between a clean filter and the maximum restriction specified by the manufacturer. The exhaust restriction normally shall be set at 80 percent of the manufacturer's recommended maximum specified exhaust restriction. The manufacturer shall be liable for emission compliance from the minimum in-use restrictions to the maximum restrictions specified by the manufacturer for that particular engine.

(ii) Inlet depression and exhaust backpressure shall be set with the engine operating at rated speed and wide open throttle, except for the case of inlet depression for naturally aspirated

engines, which shall be set at maximum engine speed and nominal zero load (high idle).

(iii) The location at which the inlet depression and exhaust backpressure is measured shall be specified by the manufacturer.

(iv) The settings shall take place during the final mode of the preconditioning prior to determining the maximum torque curve.

(2)(i) The temperature of the inlet fuel to the engine shall not exceed 110 °F (or 130 °F during the first 10 seconds of the hot start test).

(ii) The pressure of the inlet fuel and the point at which it is measured shall be specified by the manufacturer.

(g) Pre-test engine measurements (e.g., governed diesel-fueled engine high idle speed, diesel-fueled engine fuel flows, etc.), pre-test engine performance checks (e.g., verification of actual rated rpm, etc.) and pre-test system calibrations (e.g., inlet and exhaust restrictions, etc.) shall be made prior to generation of the maximum torque curve. This can be done during engine preconditioning, or at the manufacturer's convenience subject to the requirements of good engineering practice.

[48 FR 52210, Nov. 16, 1983, as amended at 52 FR 47872, Dec. 16, 1987; 62 FR 47130, Sept. 5, 1997]

§ 86.1330–90 Test sequence; general requirements.

(a) The test sequence shown in Figure N84–10 shows the major steps of the test procedure.

(b) *Control of air temperature.* (1) The temperature of the CVS dilution air shall be maintained at greater than 68 °F (20 °C) for Otto cycle engines and between 68 °F and 86 °F (20 °C and 30 °C) for diesel cycle engines throughout the test sequence, except as permitted by § 86.1335–84.

(2) For engines with auxiliary emission control devices which sense or detect ambient air temperature and operate at 68 °F or higher, the test cell ambient air temperature and the temperature of the engine intake air shall be maintained at 77 °F ±9 °F (25 °C ±5 °C) throughout the test sequence. For engines with auxiliary emission control devices which are temperature dependent and operate at 68 °F or higher, the temperature of the engine intake air shall be maintained at 77 °F ±9 °F (25 °C ±5 °C) throughout the test sequence.

(3) For engines which are not equipped with temperature dependent auxiliary emission control devices, the test cell ambient air temperature and the temperature of the engine intake air shall be greater than 68 °F (20 °C). No corrections will be made in test results or measured engine power if 86 °F (30 °C) is exceeded.

(4) The only exceptions to these temperatures are as noted in § 86.1335.

(5) For engines equipped with an air-to-air intercooler (or any other low temperature charge air cooling device) between the turbocharger compressor and the intake manifold, the procedure for simulating the device in the transient dynamometer test facilities shall follow the SAE Recommended Practice J1937, ''Engine Testing with Low Temperature Charge Air Cooling System in a Dynamometer Test Cell.''

(c) No control of ambient air, engine intake or CVS dilution air humidity is required (dehumidification of the dilution air prior to entering the CVS is allowed).

(d) The idle test of subpart P may be run after completion of the hot start exhaust emission test, if applicable.

(e) The barometric pressure observed during the generation of the maximum torque curve shall not deviate more than 1 in. Hg. from the value measured at the beginning of the map. The average barometric pressure observed during the exhaust emission test must be within 1 in. Hg. of the average observed during the maximum torque curve generation.

(f) *Petroleum-fueled and methanol-fueled diesel engines.* (1)(i) Air inlet restriction shall be set to a value midway between a clean filter and the maximum restriction specified by the manufacturer. The exhaust restriction normally shall be set at 80 percent of the manufacturer's recommended maximum specified exhaust restriction. The manufacturer shall be liable for emission compliance from the minimum in-use restrictions to the maximum restrictions specified by the manufacturer for that particular engine.

(ii) Inlet depression and exhaust backpressure shall be set with the engine operating at rated speed and wide open throttle, except for the case of inlet depression for naturally aspirated engines, which shall be set at maximum engine speed and nominal zero load (high idle).

(iii) The location at which the inlet depression and exhaust backpressure is measured shall be specified by the manufacturer.

(iv) The settings shall take place during the final mode of the preconditioning prior to determining the maximum torque curve.

(2)(i) The temperature of the inlet fuel to the engine shall not exceed 110 °F (or 130 °F during the first 10 seconds of the hot start test).

(ii) The pressure of the inlet fuel and the point at which it is measured shall be specified by the manufacturer.

(g) Pre-test engine measurements (e.g., governed petroleum-fueled or methanol-fueled diesel engine high idle speed, petroleum-fueled or methanol-fueled diesel engine fuel flows, etc.), pre-test engine performance checks (e.g., verification of actual rated rpm, etc.) and pre-test system calibrations (e.g., inlet and exhaust restrictions, etc.) shall be made prior to generation of the maximum torque curve. This can be done during engine preconditioning, or at the manufacturer s convenience subject to the requirements of good engineering practice.

[54 FR 14597, Apr. 11, 1989, as amended at 60 FR 34374, June 30, 1995; 62 FR 47131, Sept. 5, 1997]

§86.1332–90 Engine mapping procedures.

(a) Mount test engine on the engine dynamometer.

(b) Determine minimum mapping speed. The minimum speed is defined as the warm engine curb idle rpm.

(c) Determine maximum mapping speed per the following methodologies. (Note paragraph (d)(1) below.)

(1) *Otto-cycle engines.* (i) For ungoverned engines using the transient operating cycle set forth in paragraph (f)(1) of appendix I to this part, the maximum mapping speed shall be no less than that calculated from the following equation:

$$\text{Maximum speed} = \text{curb idle rpm} + \frac{105\,(\text{measured rated rpm} - \text{curb idle rpm})}{100}$$

or when a 3.0 percent drop in maximum horsepower occurs, whichever of the two is greater

(ii) For ungoverned engines using the transient operating cycle set forth in paragraph (f)(3) of appendix I to this part, the maximum mapping shall be no less than that calculated from the following equation:

$$\text{Maximum speed} = \text{curb idle rpm} + \frac{115\,(\text{measured rated rpm} - \text{curb idle rpm})}{100}$$

or when a 3.0 percent drop in maximum horsepower occurs, whichever of the two is greater

(iii) For governed engines the maximum mapped speed shall be no less than either that speed at which the wide-open throttle torque drops off to zero, or the maximum speed as calculated for ungoverned engines (paragraph (c)(1)(i) of this section)

(2) *Diesel engines.* (i) For ungoverned engines, the maximum mapping speed shall be no less than that calculated from the following equation:

$$\text{Maximum speed} = \text{curb idle rpm} + \frac{113\,(\text{measured rated rpm} - \text{curb idle rpm})}{100}$$

or when a 3.0 drop in horsepower occurs, whichever of the two is greater

(ii) For governed engines, the maximum mapping speed shall be no less than either that speed at which wide-open throttle torque drops off to zero, or the maximum speed as calculated for ungoverned engines (paragraph (c)(2)(i) of this section).

(d) Perform an engine power map.

(1) During engine preparation or warm-up, the engine may be operated such that a preliminary estimate of measured rated rpm can be made.

(2) *Otto-cycle engines.* (i) For a cold engine, start the engine and operate at zero load in accordance with the manufacturer's start-up and warm-up procedures for 1 minute ±30 seconds.

(ii) Operate the engine at a torque equivalent to 10±3 percent of the most recent determination of maximum torque for 4 minutes ±30 seconds at 2000 rpm.

(iii) Operate the engine at a torque equivalent to 55±5 percent of the most recent determination of maximum torque for 35 minutes ±1 minute at 2000 rpm.

(iv) Operate the engine at idle (minimum speed).

(v) Open the throttle fully.

(vi) While maintaining wide-open throttle and full-load, maintain minimum engine speed for at least 15 seconds. Record the average torque during the last 5 seconds.

(vii) In no greater than 100±20 rpm increments, determine the maximum torque curve from minimum speed to maximum speed. Hold each test point for 15 seconds, and record the average torque over the last 5 seconds.

(viii) *Alternate mappinq technique.* In place of paragraphs (d)(2) (vi) and (vii) of this section, a continual sweep of rpm is allowed. While operating at wide-open throttle, the engine speed is increased at an average rate of 8 rpm/sec (±1 rpm/sec) from minimum speed to maximum speed. Speed and torque points shall be recorded at a sample rate of at least one point per second.

(ix) Recalculate the maximum speed per paragraph (c)(1) (i) or (ii) of this section using the measured rated speed derived from the new maximum torque curve. If the new maximum speed lies outside the range of speeds encompassed by the actual map, then the map shall be considered void, and another map will need to be run using the newly derived measured rated speed in all calculations.

(x) For warm engines, the entire warm-up procedure specified in paragraphs (d)(2) (i) through (iii) of this section need not be repeated. It is sufficient for an engine already at normal operating temperatures to be operated at the conditions specified in paragraph (d)(2)(iii) of this section until oil and water temperatures are stabilized, after which the procedures of paragraph (d)(2) (iv) through (vii) of this section may be performed. The oil and water temperatures are defined as stabilized if they are maintained within 2 percent of point for 2 minutes.

(3) *Diesel engines.* (i) If the engine is cold, start and operate at free idle for 2 to 3 minutes.

(ii) Operate the engine at approximately 50 percent power at the peak torque speed for 5 to 7 minutes.

(iii) Operate the engine at rated speed and wide-open throttle for 25 to 30 minutes.

(iv) *Option.* The engine may be preconditioned by operating at rated speed and maximum horsepower until the oil and water temperatures are stabilized. The temperatures are defined as stabilized if they are maintained within 2 percent of point for 2 minutes. This optional procedure may be substituted for paragraph (d)(3)(iii) of this section.

(v) Unload the engine and operate at the curb idle speed.

(vi) Operate the engine at wide open throttle and minimum engine speed. Increase the engine speed at an average rate of 8 rpm/sec (±1 rpm/sec) from minimum to maximum speed. Engine speed and torque points shall be recorded at a sample rate of at least one point per second.

(vii) Recalculate the maximum speed per paragraph (c)(2) (i) or (ii) of this section using the measured rated speed derived from the new maximum torque curve. If the new maximum speed lies outside the range of speeds encompassed by the actual map, then the map shall be considered void. The entire mapping procedure shall be repeated, using the newly derived measured rated speed in all calculations.

(viii) For warm engines, the entire warm-up procedure specified in paragraphs (d)(3) (i) through (iv) of this section need not be repeated. It is sufficient for an engine already at normal operating temperatures to be operated per the requirements of paragraph (d)(3)(iv) of this section, after which the procedures of paragraph (d)(3) (v) through (vi) of this section may be performed.

(e) Mapping curve generation.

(1) *Otto-cycle engines.* (i) Fit all data points recorded under paragraphs (d)(2) (vi) and (vii) of this section (100 rpm increments) with a cubic spline, Akima, or other technique approved in advance by the Administrator. The resultant curve shall be accurate to within ±1.0 ft-lbs of all recorded engine torques.

(ii) All points generated under the continuous rpm sweep by paragraphs (d)(2) (vi) and (viii) of this section shall be connected by linear interpolation between points.

(iii) For governed engines, all points above the maximum speed (see paragraph (c)(1)(ii) of this section) shall be assigned maximum torque values of zero for purposes of cycle generation.

(iv) For all engines, all speed points below the minimum speed shall be assigned a maximum torque value equal to that observed at minimum speed for purposes of cycle generation.

(v) The torque curve resulting from paragraphs (e)(1) (i) through (iv) of this section is the mapping curve and will be used to convert the normalized torque values in the engine cycle (*see* paragraph (f)(1) of appendix I to this part) to actual torque values for the test cycle.

(2) *Diesel engines.* (i) Connect all data points recorded under paragraph (d)(3)(vi) of this section using linear interpolation between points.

(ii) For governed engines, all points above the maximum speed (*see* paragraph (c)(2)(ii) of this section) shall be assigned maximum torque values of zero for purposes of cycle generation.

(iii) For all engines, all speed points below the minimum speed shall be assigned a maximum torque value equal to that observed at the minimum speed for purposes of cycle generation.

(iv) The torque curve resulting from paragraphs (e)(2) (i) through (iii) of this section is the mapping curve and will be used to convert the normalized torque values in the engine cycle (*see* paragraph (f)(2) of appendix I to this part) into actual torque values for the test cycle.

(f) *Alternate mapping.* If a manufacturer believes that the above mapping techniques are unsafe or unrepresentative for any given engine or engine family, alternate mapping techniques may be used. These alternate techniques must satisfy the intent of the specified mapping procedures to determine the maximum available torque at all engine speeds achieved during the test cycles. Deviations from the mapping techniques specified in this section for reasons of safety or representativeness shall be reported per § 86.1344(e)(6), along with the justification for their use. In no case, however, shall descending continual sweeps of rpm be used for governed or turbocharged engines.

(g) *Replicate Tests.* An engine need not be mapped before each and every cold cycle test. An engine shall be remapped prior to a cold cycle test if:

(1) An unreasonable amount of time has transpired since the last map, as determined by engineering judgment, or

(2) The barometric pressure prior to the start of the cold cycle test has changed more than 1 in hg. from the average barometric pressure observed durinq the map, or

(3) Physical changes or recalibrations have been made to the engine which may potentially affect engine performance.

[54 FR 14597, Apr. 11, 1989, as amended at 59 FR 48533, Sept. 21, 1994]

§ 86.1333–90 Transient test cycle generation.

(a) The heavy-duty transient engine cycles for Otto-cycle and diesel engines are listed in appendix I ((f) (1), (2) and (3)) to this part. These second-by-second listings represent torque and rpm maneuvers characteristic of heavy-duty engines. Both rpm and torque are normalized (expressed as a percentage of maximum) in these listings.

(1) To unnormalize rpm, use the following equation:

$$\text{Actual rpm} = \frac{\text{\% rpm (Measured rated rpm} - \text{Curb idle rpm)}}{100} + \text{Curb idle rpm}$$

The method of calculating measured rated rpm is detailed in paragraph (g) of this section.

(2) Torque is normalized to the maximum torque at the rpm listed with it. Therefore, to unnormalize the torque values in the cycle, the maximum torque curve for the engine in question must be used. The generation of the maximum torque curve is described in § 86.1332.

(3) The EPA Engine Dynamometer Schedule for Heavy Duty Diesel Engines listed in appendix I (f)(2) contains torque points referred to as ''closed rack motoring.'' For reference cycle calculation torque points shall take on unnormalized values determined in either of the following three ways:

(i) Negative 40 percent of the positive torque available at the associated speed point. The generation of this positive maximum torque curve is described in § 86.1332.

(ii) Map the amount of negative torque required to motor the engine between idle and maximum mapping speed and use this map to determine the amount of negative torque required at the associated speed point.

(iii) Determine the amount of negative torque required to motor the engine at idle and rated speeds and linearly interpolate using these two points.

(b) *Example of the unnormalization procedure.* The following test point shall be unnormalized:

Percent RPM	Percent Torque
43	82

Given the following values:

Measured Rated rpm = 3800.

Curb Idle rpm = 600.

(1) *Calculate actual rpm:*

$$\text{Actual rpm} = \frac{\text{\% rpm (measured rated rpm} - \text{curb idle rpm)}}{100} + \text{curb idle rpm}$$

$$= \frac{43\,(3800 - 600)}{100} + 600$$

$$= \frac{43\,(3800 - 600)}{1976} + 600$$

(2) *Determine actual torque:* Determine the maximum observed torque at 1976 rpm from the maximum torque curve. Then multiply this value (*e.g.*, 358 ft-lbs) by 0.82. This results in an actual torque of 294 ft-lbs.

(c) Engine speed and torque shall be recorded at least once every second during the cold start test and hot start test. The torque and rpm feedback signals may be filtered.

(d) *Cold start enhancement devices.* The zero percent speed specified in the engine dynamometer schedules (appendix I (f)(1), (f)(2) or (f)(3) to this part) shall be superseded by proper operation of

the engine's automatic cold start enhancement device.

(1) During automatic cold start enhancement device operation, a manual transmission engine shall be allowed to idle at whatever speed is required to produce a feedback torque of 0 ft-lbs. ±10 ft-lbs. (using, for example, clutch disengagement, speed to torque control switching, software overrides, etc.) at those points in appendix I (f)(1), (f)(2), or (f)(3) to this part where both reference speed and reference torque are zero percent values.

(2) During automatic cold start enhancement device operation, an automatic transmission engine shall be allowed to idle at whatever speed is required to produce a feedback torque of CITT ft-lbs. ±10 ft-lbs. (see paragraph (e)(2) of this section for definition of CITT) at those points in appendix I (f)(1), (f)(2), or (f)(3) to this part where both reference speed and reference torque are zero percent values.

(e) *Automatic transmissions.* The reference cycles in paragraphs (f) (1) and (2) of appendix I to this part shall be altered for test engines intended primarily for use with automatic transmissions.

(1) Zero percent speed for automatic transmission engines is defined as curb idle rpm (*i.e.,* in-vehicle, coupled with automatic transmission in gear).

(2) All zero-percent speed, zero-percent torque points (idle points) shall be modified to zero percent speed, Curb Idle Transmission Torque (CITT), except as permitted in §86.1337–90(a)(9). Also, all points with speed equal to or less than zero percent and torque less than CITT shall be modified to CITT. Motoring torque shall remain unchanged. In order to provide a smooth torque transition, all consecutive torque points that are between 0 and CITT shall be changed to CITT if the first of these is preceded or the last of these is succeeded by idle points. The manufacturer's specified CITT shall be based upon that value observed in typical applications at the mean of the manufacturers' specified idle speed range at stabilized temperature conditions.

(f) *Clutch operation.* Manual transmission engines may be tested with a clutch. If used, the clutch shall be disengaged at all zero percent speeds, zero percent torque points, but may be engaged up to two points preceeding a non-zero point, and may be engaged for time segments with zero percent speed and torque points of durations less than four seconds. (*See* §86.1341 for allowances in the cycle validation criteria.)

(g) *Measured rated rpm.* The measured rated rpm corresponds to the 100 percent rpm values specified in the reference cycles (paragraphs (f) (1) and (2) of appendix I to this part). It is generally intended to represent the rpm at which maximum brake horsepower occurs. For the purposes of this test sequence, it shall either be defined as the manufacturer's specified rated speed, or calculated in the following way, whichever yields the higher speed:

(1) From the maximum torque curve generated per §86.1332, find the maximum observed brake horsepower of the engine.

(2) Calculate 98 percent of the observed maximum brake horsepower, and determine from the maximum torque curve the highest and lowest engine rpms at which this brake horsepower is observed.

(3) The highest and lowest of the 98 percent power rpms represent the endpoints of an rpm range. The midpoint of this range shall be considered the measured rated rpm for cycle generation purposes.

[54 FR 14599, Apr. 11, 1989, as amended at 62 FR 47131, Sept. 5, 1997; 63 FR 24449, May 4. 1998]

§86.1334–84 Pre-test engine and dynamometer preparation.

(a) *Control system calibration.* (1) Before the cold soak or cool down, final calibration of the dynamometer and throttle control systems may be performed. These calibrations may consist of steady-state operations and/or actual practice cycle runs.

(2) Following any practice runs or calibration procedures, the engine shall be cooled per §86.1335–90.

(b) [Reserved]

[48 FR 52210, Nov. 16, 1983, as amended at 49 FR 48145, Dec. 10, 1984; 52 FR 47874, Dec. 16, 1987; 62 FR 47131, Sept. 5, 1997]

§ 86.1335–90 Cool-down procedure.

(a) This cool-down procedure applies to Otto-cycle and diesel engines.

(b) Engines may be soaked at ambient conditions. No substances or fluids may be applied to the engine's internal or external surfaces except for water and air as prescribed in paragraphs (c) and (d) of this section.

(c) For water-cooled engines, two types of cooling are permitted:

(1) Water may be circulated through the engine's water coolant system.

(i) The coolant may be flowed in either direction and at any desired flow rate. The thermostat may be removed or blocked open during the cool-down but must be restored before the exhaust emissions test begins.

(ii) The temperature of the circulated or injected water shall be at least 10 °C (50 °F). In addition, the temperature of the cooling water shall not exceed 30 °C (86 °F) during the last 30 minutes of the cool-down.

(iii) Only water, including the use of a building's standard water supply, or the coolant type that is already in the engine (per § 86.1327–90(e)) is permitted for cool-down purposes.

(2) Flows of air may be directed at the exterior of the engine.

(i) The air shall be directed essentially uniformly over the exterior surface of the engine at any desired flow rate.

(ii) The temperature of the cooling air shall not exceed 86 °F (30 °C) during the last 30 minutes of the cool-down, but may be less than 68 °F (20 °C) at any time.

(d) For air-cooled engines, only cooling as prescribed in paragraph (c)(2) of this section is permitted.

(e)(1) The cold cycle exhaust emission test may begin after a cool-down only when the engine oil and water temperatures are stabilized between 68 °F and 86 °F (20 °C and 30 °C) for a minimum of fifteen minutes.

(i) These temperature measurements are to be made by temperature measurement devices immersed in the sump oil and in the thermostat housing or cylinder head cooling circuit, the sensor parts of which are not in contact with any engine surface.

(ii) The flow of oil and water shall be shut off during this measurement. Air flow, except as necessary to keep the cell temperature between 68 °F and 86 °F (20 °C and 30 °C), shall be shut off. No engine oil change is permitted during the test sequence.

(2) Direct cooling of engine oil through the use of oil coolers or heat exchangers is permitted. The cold cycle emission test may begin only when the requirements in paragraph (e)(1)(ii) are met.

(3) Any other means for the direct cooling of the engine oil must be approved in advance by the Administrator.

(f)(1) The cold cycle exhaust emission test for engines equipped with exhaust aftertreatment devices may begin after a cool-down only when the aftertreatment device is 77 °F ±9 °F (25 °C ±5 °C), in addition to the temperature restrictions in paragraph (e) of this section. For catalysts, this temperature must be measured at the outlet of the catalyst bed.

(2) Exhaust aftertreatment device cool-down may be accomplished in whatever manner and using whatever coolant deemed appropriate by proper engineering judgment. The aftertreatment device, engine, and exhaust piping configurations shall not be separated, altered, or moved in any way during the cool-down.

(g) For engines with auxiliary emission control devices which are temperature dependent, the cold start shall not begin until the temperature readings of the auxiliary emission control devices are stable at 77 °F ±9 °F (25 °C ±5 °C).

(h) At the completion of the cool-down all of the general requirements specified in § 86.1330, the oil temperature specification set forth in paragraph (e) of this section, and the catalyst temperature specifications in paragraph (f) of this section must be met before the cold cycle exhaust emission test may begin.

[62 FR 47131, Sept. 5, 1997]

§ 86.1336–84 Engine starting, restarting, and shutdown.

(a) The engine shall be started according to the manufacturer's recommended starting procedure in the

owner's manual, using either a production starter motor or the dynamometer. The speed at which the engine is cranked (motored) with the dynamometer shall be equal to the cranking speed (nominal speed ±10 percent) in the vehicle with a fully charged battery. The time taken to accelerate the engine to cranking speed by the dynamometer shall be equal (nominal ±0.5 seconds) to the time required with a starter motor. Motoring by the dynamometer shall be terminated not more than one second after the engine starts. The 24 ±1-second free idle period, and declutching if applicable, shall begin when the engine is determined to have started.

(1) Engines equipped with automatic chokes shall be operated according to the manufacturer's operating instructions in the owner's manual, including choke setting and ''kick-down'' from cold fast idle.

(2) Engines equipped with manual chokes shall be operated according to the manufacturer's operating instructions in the owner's manual.

(3) The operator may use the choke, throttle, etc. where necessary to keep the engine running.

(4) If the manufacturer's operating instructions in the owner's manual do not specify a warm engine starting procedure, the engine (automatic and manual choke engines) shall be started by depressing the throttle half way and cranking the engine until it starts.

(b)(1) If the engine does not start after 15 seconds of cranking, cranking shall cease and the reason for failure to start shall be determined. The gas flow measuring device (or revolution counter) on the constant volume sampler (and the hydrocarbon integrator when testing diesel-fueled engines) shall be turned off during this diagnostic period. In addition, either the CVS should be turned off or the exhaust tube disconnected from the tailpipe during the diagnostic period. If failure to start is an operational error, the engine shall be rescheduled for testing from a cold start.

(2) If longer cranking times are necessary and recommended to the ultimate purchaser, such cranking times may be used in lieu of the 15-second limit, provided the owner's manual and the service repair manual indicate that the longer cranking times are normal.

(3) If a failure to start occurs during the cold portion of the test and is caused by an engine malfunction, corrective action of less than 30 minutes duration may be taken (according to § 86.084–25), and the test continued. The sampling system shall be reactivated at the same time cranking begins. When the engine starts, the timing sequence shall begin. If failure to start is caused by engine malfunction and the engine cannot be started, the test shall be voided and corrective action may be taken according to § 86.084–25.

(4) If a failure to start occurs during the hot start portion of the test and is caused by engine malfunction, the engine must be started within one minute of key on. The sampling system shall be reactivated at the same time cranking begins. When the engine starts, the transient engine cycle timing sequence shall begin. If the engine cannot be started within one minute of key on, the test shall be voided, corrective action taken (according to § 86.084–25), and the engine rescheduled for testing.

(c) *Engine stalling.* (1) If the engine stalls during the initial idle period of either the cold or hot start test, the engine shall be restarted immediately using the appropriate cold or hot starting procedure and the test continued.

(2) If the engine stalls anywhere in the cold cycle, except in the initial idle period, the test shall be voided.

(3) If the engine stalls on the hot cycle portion of the test at any time other than the initial idle, the engine may be shut off and resoaked for 20 minutes. The hot cycle may then be rerun. Only one hot start resoak and restart is permitted.

(d) *Engine shutdown.* Engine shutdown shall be performed in accordance with manufacturer's specifications.

(e) *Test equipment malfunction*—(1) *Gasoline- and methanol-fueled engines.* If a malfunction occurs in any of the required test equipment during the test run, the test shall be voided.

(2) *Diesel-fueled, natural gas-fueled and liquefied petroleum gas-fueled engines.* (i) If a malfunction occurs in any of the required test equipment during the cold cycle portion of the test, the test shall be voided.

(ii) If a malfunction occurs in any of the required test equipment (computer, gaseous emissions analyzer, etc.) during the hot cycle portion of the test, complete the full engine cycle before engine shut-down then resoak for 20 minutes.

(A) If the test equipment malfunction can be corrected before the resoak period has been completed, the hot cycle portion of the test may be rerun.

(B)(*1*) If the test equipment malfunction is corrected after the completion of the resoak period, then the preconditioning cycle must be run before the hot cycle. This consists of a full 20 minute transient cycle followed by a 20 minute soak and then the for-record hot cycle.

(*2*) In no case can the start of the cold cycle and the start of the hot cycle be separated by more than 4 hours.

(Secs. 202, 203, 206, 207, 208, 301a, Clean Air Act, as amended; 42 U.S.C. 7521, 7522, 7525, 7541, 7542, 7601a)

[48 FR 52210, Nov. 16, 1983, as amended at 49 FR 48145, Dec. 10, 1984; 50 FR 10694, Mar. 15, 1985; 52 FR 47874, Dec. 16, 1987; 58 FR 16065, Mar. 24, 1993; 59 FR 48533, Sept. 21, 1994]

§ 86.1337–90 Engine dynamometer test run.

(a) The following steps shall be taken for each test:

(1) Prepare the engine, dynamometer, and sampling system for the cold-start test. Change filters, etc., and leak check as necessary.

NOTE: For a single dilution particulate system, a propane check will not reveal a pressure side leak (that portion of the system downstream of the pump) since the volume concentration in ppm will not change if a portion of the sample is lost. A separate leak check is needed.

A leak check of a filter assembly that has only one seal ring in contact with the filter media will not detect a leak when tested under vacuum. A pressure leak test should be performed.

(2) Connect evacuated sample collection bags to the dilute exhaust and dilution air sample collection systems.

(3) For methanol-fueled vehicles, install fresh methanol and formaldehyde impingers (or cartridges) in the exhaust and dilution air sample systems for methanol and formaldehyde. A single dilution air sample covering the total test period may be utilized for methanol and formaldehyde background. (Background measurements of methanol and formaldehyde may be omitted and concentrations assumed to be zero for calculations in § 86.1344.)

(4) Attach the CVS to the engine exhaust system any time prior to starting the CVS.

(5) Start the CVS (if not already on), the sample pumps (except for the particulate sample pump(s), if applicable), the engine cooling fan(s), and the data collection system. The heat exchanger of the constant volume sampler (if used), and the heated components of any continuous sampling system(s) (if applicable) shall be preheated to their designated operating temperatures before the test begins. (*See* § 86.1340(e) for continuous sampling procedures.)

(6) Adjust the sample flow rates to the desired flow rates and set the CVS gas flow measuring devices to zero.

NOTE: CFV–CVS sample flow rate is fixed by the venturi design.

(7) For diesel engines tested for particulate emissions, carefully install a clean particulate sample filter into each of the filter holders and install the assembled filter holders in the sample flow line (filter holders may be preassembled).

(8) Follow the manufacturers choke and throttle instructions for cold starting. Simultaneously start the engine and begin exhaust and dilution air sampling. For petroleum-fueled diesel engines (and natural gas-fueled, liquified petroleum gas-fueled or methanol-fueled diesels, if used), turn on the hydrocarbon and NO_X (and CO and CO_2, if continuous) analyzer system integrators (if used), and turn on the particulate sample pumps and indicate the start of the test on the data collection medium.

(9) As soon as it is determined that the engine is started, start a ''free idle'' timer. Allow the engine to idle freely with no-load for 24 ±1 seconds. This idle period for automatic transmission engines may be interpreted as an idle speed in neutral or park. All other idle conditions shall be interpreted as an idle speed in gear. It is permissible to lug the engine down to

curb idle speed during the last 8 seconds of the free idle period for the purpose of engaging dynamometer control loops.

(10) Begin the transient engine cycles such that the first non-idle record of the cycle occurs at 25±1 seconds. The free idle time is included in the 25±1 seconds.

(i) During diesel particulate sampling it must be demonstrated that the ratio of main tunnel flow to particulate sample flow does not change by more than ±5.0 percent of its set point value (except for the first 10 seconds of sampling).

NOTE: For double dilution operation, sample flow is the net difference between the flow rate through the sample filters and the secondary dilution air flow rate.

(ii) Record the average temperature and pressure at the gas meter(s) or flow instrumentation inlet, where needed to calculate flow. If the set flow rate cannot be maintained because of high particulate loading on the filter, the test shall be terminated. The test shall be rerun using a lower flow rate and/or a larger diameter filter.

(11) Begin the transient engine cycles such that the first non-idle record of the cycle occurs at 25 ±1 seconds. The free idle time is included in the 25 ±1 seconds.

(12) On the last record of the cycle, cease sampling. Immediately turn the engine off, and start a hot-soak timer. Also turn off the particulate sample pumps, the gas flow measuring device(s) and any continuous analyzer system integrators and indicate the end of the test on the data collection medium. Sampling systems should continue to sample after the end of the test cycle until system response times have elapsed.

(13) Immediately after the engine is turned off, turn off the engine cooling fan(s) if used, and the CVS blower (or disconnect the exhaust system from the CVS). As soon as possible, transfer the ''cold start cycle'' exhaust and dilution air bag samples to the analytical system and process the samples according to § 86.1340. A stabilized reading of the exhaust sample on all analyzers shall be obtained within 20 minutes of the end of the sample collection phase of the test. Analysis of the methanol and formaldehyde samples shall be obtained within 24 hours of the end of the sample collection period. For petroleum-fueled and methanol-fueled diesel engines, carefully remove the filter holder from the sample flow apparatus, and remove each particulate sample filter from its holder and invert the secondary filter and place it stain side to stain side on top of the primary filter. Place the filter pair in a petri dish and cover.

(14) Allow the engine to soak for 20±1 minutes.

(15) Prepare the engine and dynamometer for the hot start test.

(16) Connect evacuated sample collection bags to the dilute exhaust and dilution air sample collection systems.

(17) Install fresh methanol and formaldehyde impingers (or capsules) in the exhaust and dilution air sample systems for methanol and formaldehyde.

(18) Start the CVS (if not already on) or connect the exhaust system to the CVS (if disconnected). Start the sample pumps (except the particulate sample pump(s), if applicable), the engine cooling fan(s) and the data collection system. The heat exchanger of the constant volume sampler (if used) and the heated components of any continuous sampling system(s) (if applicable) shall be preheated to their designated operating temperatures before the test begins. See § 86.1340(e) for continuous sampling procedures.

(19) Adjust the sample flow rates to the desired flow rate and set the CVS gas flow measuring devices to zero.

(20) For diesel engines tested for particulate, carefully install a clean particulate filter in each of the filter holders and install assembled filter holders in the sample flow line (filter holders may be preassembled).

(21) Follow the manufacturer's choke and throttle instruction for hot starting. Simultaneously start the engine and begin exhaust and dilution air sampling. For diesel engines, turn on the hydrocarbon and NO_X (and CO and CO_2, if continuous) analyzer system integrators (if used), indicate the start of the test on the data collection medium, and turn on the particulate sample pump(s).

(22) As soon as it is determined that the engine is started, start a ''free idle'' timer.

(23) Allow the engine to idle freely with no-load for 24 ±1 seconds. The provisions and interpretations of paragraph (a)(9) of this section apply.

(24) Begin the transient-engine cycle such that the first non-idle record of the cycle occurs at 25±1 seconds. The free idle is included in the 25±1 seconds.

(25) On the last record of the cycle, allow sampling system response times to elapse and cease sampling. Turn off the particulate sample pump(s) (if appropriate), the gas flow measuring device(s) and any continuous analyzer system integrators and indicate the end of the test on the data collection medium.

(26) As soon as possible, transfer the ''hot start cycle'' exhaust and dilution air bag samples to the analytical system and process the samples according to § 86.1340. A stabilized reading of the exhaust sample on all analyzers shall be obtained within 20 minutes of the end of the sample collection phase of the test. Analyze the methanol and formaldehyde samples within 24 hours. (If it is not possible to perform analysis within 24 hours, the samples should be stored in a cold (approximately 0 °C) dark environment until analysis can be performed). For petroleum-fueled and methanol-fueled diesel engines, carefully remove the assembled filter holder from the sample flow lines and remove each particulate sample filter from its holder and invert the secondary filter and place it stain side to stain side on top of the primary filter. Place the filter pairs in a clean petri dish and cover as soon as possible. Within 1 hour after the end of the hot start phase of the test, transfer the particulate filters to the weighing chamber for post-test conditioning.

(27) The CVS and the engine may be turned off, if desired.

(b) The procedure in paragraph (a) of this section is designed for one sample bag for the cold start portion and one for the hot start portion. It is also permissible to use more than one sample bag per test portion.

(c) If a dynamometer test run is determined to be void, corrective action may be taken. The engine may then be allowed to cool (naturally or forced) and the dynamometer test rerun per paragraph (a) or (b) of this section.

[54 FR 14600, Apr. 11, 1989, as amended at 59 FR 48533, Sept. 21, 1994; 60 FR 34374, June 30, 1995; 62 FR 47132, Sept. 5, 1997]

§ 86.1337–96 Engine dynamometer test run.

(a) The following steps shall be taken for each test:

(1) *Prepare for the cold-start test.* (i) For gasoline- and methanol-fueled engines only, evaporative emission canisters shall be prepared for use in this testing in accordance with the procedures specified in § 86.1232–96 (h) or (j). The size of the canisters used for testing shall correspond with the largest canister capacity expected in the range of vehicle applications for each engine. The Administrator may, at his discretion, use a smaller canister capacity. Attach the evaporative emission canister(s) to the engine, using the canister purge plumbing and controls employed in vehicle applications of the engine being tested. Plug the canister port that is normally connected to the fuel tank.

(ii) Prepare the engine, dynamometer, and sampling system.

(iii) Change filters, etc., and leak check as necessary. For a single dilution particulate system, a propane check will not reveal a pressure side leak (that portion of the system downstream of the pump) since the volume concentration in ppm will not change if a portion of the sample is lost. A separate leak check is needed. A leak check of a filter assembly that has only one seal ring in contact with the filter media will not detect a leak when tested under vacuum. A pressure leak test should be performed.

(2) Connect evacuated sample collection bags to the dilute exhaust and dilution air sample collection systems.

(3) For methanol-fueled vehicles, install fresh methanol and formaldehyde impingers (or cartridges) in the exhaust and dilution air sample systems for methanol and formaldehyde. A single dilution air sample covering the total test period may be utilized for methanol and formaldehyde background. (Background measurements of methanol and formaldehyde may be

omitted and concentrations assumed to be zero for calculations in § 86.1344.)

(4) Attach the CVS to the engine exhaust system any time prior to starting the CVS.

(5) Start the CVS (if not already on), the sample pumps (except for the particulate sample pump(s), if applicable), the engine cooling fan(s), and the data collection system. The heat exchanger of the constant volume sampler (if used), and the heated components of any continuous sampling system(s) (if applicable) shall be preheated to their designated operating temperatures before the test begins. (See § 86.1340(e) for continuous sampling procedures.)

(6) Adjust the sample flow rates to the desired flow rates and set the CVS gas flow measuring devices to zero. CFV–CVS sample flow rate is fixed by the venturi design.

(7) For diesel engines tested for particulate emissions, carefully install a clean particulate sample filter into each of the filter holders and install the assembled filter holders in the sample flow line (filter holders may be preassembled).

(8) Follow the manufacturer's choke and throttle instructions for cold starting. Simultaneously start the engine and begin exhaust and dilution air sampling. For petroleum-fueled diesel engines (and natural gas-fueled, liquified petroleum gas-fueled or methanol-fueled diesels, if used) turn on the hydrocarbon and NO_X (and CO and CO_2, if continuous) analyzer system integrators (if used), and turn on the particulate sample pumps and indicate the start of the test on the data collection medium.

(9) As soon as it is determined that the engine is started, start a ''free idle'' timer. Allow the engine to idle freely with no-load for 24±1 seconds. This idle period for automatic transmission engines may be interpreted as an idle speed in neutral or park. All other idle conditions shall be interpreted as an idle speed in gear. It is permissible to lug the engine down to curb idle speed during the last 8 seconds of the free idle period for the purpose of engaging dynamometer control loops.

(10) Begin the transient engine cycles such that the first non-idle record of the cycle occurs at 25±1 seconds. The free idle time is included in the 25±1 seconds.

(i) During diesel particulate sampling it must be demonstrated that the ratio of main tunnel flow to particulate sample flow does not change by more than ±5.0 percent of its set point value (except for the first 10 seconds of sampling). For double dilution operation, sample flow is the net difference between the flow rate through the sample filters and the secondary dilution air flow rate.

(ii) Record the average temperature and pressure at the gas meter(s) or flow instrumentation inlet, where needed to calculate flow. If the set flow rate cannot be maintained because of high particulate loading on the filter, the test shall be terminated. The test shall be rerun using a lower flow rate and/or a larger diameter filter.

(11) Begin the transient engine cycles such that the first non-idle record of the cycle occurs at 25±1 seconds. The free idle time is included in the 25±1 seconds.

(12) On the last record of the cycle, cease sampling. Immediately turn the engine off and start a hot-soak timer. Also turn off the particulate sample pumps, the gas flow measuring device(s) and any continuous analyzer system integrator and indicate the end of the test on the data collection medium. Sampling systems should continue to sample after the end of the test cycle until system response times have elapsed.

(13) Immediately after the engine is turned off, turn off the engine cooling fan(s) if used, and the CVS blower (or disconnect the exhaust system from the CVS). As soon as possible, transfer the ''cold start cycle'' exhaust and dilution air bag samples to the analytical system and process the samples according to § 86.1340. A stabilized reading of the exhaust sample on all analyzers shall be obtained within 20 minutes of the end of the sample collection phase of the test. Analysis of the methanol and formaldehyde samples shall be obtained within 24 hours of the end of the sample collection period. For petroleum-fueled and methanol-fueled diesel engines, carefully remove the filter holder from the sample flow apparatus,

remove each particulate sample filter from its holder and invert the secondary filter and place it stain side to stain side on top of the primary filter. Place the filter pair in a petri dish and cover.

(14) Allow the engine to soak for 20±1 minutes.

(15) Prepare the engine and dynamometer for the hot start test.

(16) Connect evacuated sample collection bags to the dilute exhaust and dilution air sample collection systems.

(17) Install fresh methanol and formaldehyde impingers (or capsules) in the exhaust and dilution air sample systems for methanol and formaldehyde.

(18) Start the CVS (if not already on) or connect the exhaust system to the CVS (if disconnected). Start the sample pumps (except the particulate sample pump(s), if applicable), the engine cooling fan(s) and the data collection system. The heat exchanger of the constant volume sampler (if used) and the heated components of any continuous sampling system(s) (if applicable) shall be preheated to their designated operating temperatures before the test begins. See §86.1340(e) for continuous sampling procedures.

(19) Adjust the sample flow rates to the desired flow rate and set the CVS gas flow measuring devices to zero.

(20) For diesel engines tested for particulate, carefully install a clean particulate filter in each of the filter holders and install assembled filter holders in the sample flow line (filter holders may be preassembled).

(21) Follow the manufacturer's choke and throttle instruction for hot starting. Simultaneously start the engine and begin exhaust and dilution air sampling. For diesel engines, turn on the hydrocarbon and NO_X (and CO and CO_2, if continuous) analyzer system integrator (if used), indicate the start of the test on the data collection medium, and turn on the particulate sample pump(s).

(22) As soon as it is determined that the engine is started, start a ''free idle'' timer.

(23) Allow the engine to idle freely with no-load for 24±1 seconds. The provisions and interpretations of paragraph (a)(9) of this section apply.

(24) Begin the transient-engine cycle such that the first non-idle record of the cycle occurs at 25±1 seconds. The free idle is included in the 25±1 seconds.

(25) On the last record of the cycle, allow sampling system response times to elapse and cease sampling. Turn off the particulate sample pump(s) (if appropriate), the gas flow measuring device(s) and any continuous analyzer system integrator and indicate the end of the test on the data collection medium.

(26) As soon as possible, transfer the ''hot start cycle'' exhaust and dilution air bag samples to the analytical system and process the samples according to §86.1340. A stabilized reading of the exhaust sample on all analyzers shall be obtained within 20 minutes of the end of the sample collection phase of the test. Analyze the methanol and formaldehyde samples within 24 hours. (If it is not possible to perform analysis within 24 hours, the samples should be stored in a cold (approximately 0 °C) dark environment until analysis can be performed). For petroleum-fueled and methanol-fueled diesel engines, carefully remove the assembled filter holder from the sample flow lines and remove each particulate sample filter from its holder and invert the secondary filter and place it stain side to stain side on top of the primary filter. Place the filter pairs in a clean petri dish and cover as soon as possible. Within 1 hour after the end of the hot start phase of the test, transfer the particulate filters to the weighing chamber for post-test conditioning.

(27) The CVS and the engine may be turned off, if desired.

(b) The procedure in paragraph (a) of this section is designed for one sample bag for the cold start portion and one for the hot start portion. It is also permissible to use more than one sample bag per test portion.

(c) If a dynamometer test run is determined to be void, corrective action may be taken. The engine may then be allowed to cool (naturally or forced) and the dynamometer test rerun per paragraph (a) or (b) of this section.

[58 FR 16065, Mar. 24, 1993, as amended at 59 FR 48533, Sept. 21, 1994; 60 FR 34375, June 30, 1995; 62 FR 47133, Sept. 5, 1997]

§86.1338–84 Emission measurement accuracy.

(a) *Measurement accuracy—Bag sampling.* (1) Good engineering practice dictates that exhaust emission sample analyzer readings below 15 percent of full scale chart deflection should generally not be used.

(2) Some high resolution read-out systems such as computers, data loggers, etc., can provide sufficient accuracy and resolution below 15 percent of full scale. Such systems may be used provided that additional calibrations of at least 4 non-zero nominally equally spaced points, using good engineering judgement, below 15 percent of full scale are made to ensure the accuracy of the calibration curves.

(3) The following procedure shall be followed:

(i) Span the analyzer using a calibration gas that meets the accuracy requirements of §86.1314–84(f)(2), is within the operating range of the analyzer and at least 90% of full scale.

(ii) Generate calibration data over the full concentration range at a minimum of 6, approximately equally spaced, points (e.g. 15, 30, 45, 60, 75 and 90 percent of the range of concentrations provided by the gas divider). If a gas divider or blender is being used to calibrate the analyzer and the requirements of paragraph (a)(2) of this section are met, verify that a second calibration gas with a concentration between 10 and 20 percent of full scale can be named within 2 percent of its certified concentration. If more calibration points are needed to meet the requirements of paragraph (a)(2) of this section, continue with paragraph (a)(3)(iii) of this section.

(iii) If a gas divider or blender is being used to calibrate the analyzer, input the value of a second calibration gas (a span gas may be used for calibrating a CO_2 analyzer) having a named concentration between 10 and 20 percent of full scale. This gas shall be included on the calibration curve. Continue adding calibration points by dividing this gas until the requirements of paragraph (a)(2) of this section are met.

(iv) Fit a calibration curve per §§86.1321 through 86.1324 for the full scale range of the analyzer using the calibration data obtained with both calibration gases.

(b) *Measurement accuracy—Continuous sampling.* (1) Analyzers used for continuous analysis must be operated such that the measured concentration falls between 15 and 100 percent of full scale chart deflection. Exceptions to these limits are:

(i) Analyzer response less than 15 percent or more than 100 percent of full scale may be used if automatic range change circuitry is used and the limits for range changes are between 15 and 100 percent of full scale chart deflection;

(ii) Analyzer response less than 15 percent of full scale may be used if one of the following is true:

(A) Alternative (a)(2) of this section is used to ensure that the accuracy of the calibration curve is maintained below 15 percent; or

(B) The full scale value of the range is 155 ppm (C) or less.

(iii) Analyzer response over 100% of full scale may be used if it can be shown that readings in this range are accurate.

(iv) The HC and CO readings are allowed to ''spike'' above full scale of the analyzer's maximum operating range for a maximum accumulation of 5 seconds. These analyzer readings shall default to the maximum readable value during this time.

(c) If a gas divider is used, the gas divider shall conform to the accuracy requirements specified in §86.1314–84(g), and shall be used according to the procedures contained in (a) and (b) of this section.

[62 FR 47133, Sept. 5, 1997]

§86.1339–90 Particulate filter handling and weighing.

(a) At least 1 hour before the test, place a filter pair in a closed (to eliminate dust contamination) but unsealed (to permit humidity exchange) petri dish and place in a weighing chamber meeting the specifications of §86.1312 for stabilization.

(b) At the end of the stabilization period, weigh each filter pair on a balance having a precision of 20 micrograms and a readability of 10 micrograms. This reading is the tare

weight of the filter pair and must be recorded (see § 86.1344(e)(18)).

(c) The filter pair shall then be stored in a covered petri dish or a sealed filter holder, either of which shall remain in the weighing chamber until needed for testing.

(d) If the filter pair is not used within 1 hour of its removal from the weighing chamber, it must be re-weighed before use. This limit of 1 hour may be replaced by an 8-hour limit if either of the following three conditions are met:

(1) A stabilized filter pair is placed and kept in a sealed filter holder assembly with the ends plugged; or

(2) A stabilized filter pair is placed in a sealed filter holder assembly, which is then immediately placed in a sample line through which there is no flow; or

(3) A combination of the conditions specified in paragraphs (d) (1) and (2) of this section.

(e) After the emissions test, remove the filters from the filter holder and place them face to face in a covered but unsealed petri dish. They must then be conditioned in the weighing chamber for at least one hour. The filters are then weighed as a pair. This reading is the gross weight of the filters (Pf) and must be recorded (see § 86.1344–90(e)(19)).

(f) The net particulate weight (Pf) on each filter pair is the gross weight minus the tare weight. Should the sample on the filters (exhaust or background) contact the petri dish or any other surface, the test is void and must be rerun.

(g) Static neutralizers shall be used on petri dishes in accordance with good engineering judgement.

[62 FR 47134, Sept. 5, 1997]

§ 86.1340–90 Exhaust sample analysis.

(a) The analyzer response may be read by automatic data collection (ADC) equipment such as computers, data loggers, etc. If ADC equipment is used the following is required:

(1) For bag analysis, the analyzer response must be stable at greater than 99 percent of the final reading for the dilute exhaust sample bag. A single value representing the average chart deflection over a 10-second stabilized period shall be stored. For the background bag, all readings taken during the 10-second interval must be stable at the final value to within ±1 percent of full scale.

(2) For continuous analysis systems, the ADC system must read at least two analyzer readings per second. A single value representing the average integrated concentration over a cycle shall be stored.

(3) The chart deflections or average integrated concentrations required in paragraphs (a) (1) and (2) of this section may be stored on long-term computer storage devices such as computer tapes, storage discs, punch cards, or they may be printed in a listing for storage. In either case a chart recorder is not required and records from a chart recorder, if they exist, need not be stored.

(4) If the data from ADC equipment is used as permanent records, the ADC equipment and the analyzer values as interpreted by the ADC equipment are subject to the calibration specifications in §§ 86.1316 through 86.1326, as if the ADC equipment were part of the analyzer.

(b) Data records from any one or a combination of analyzers may be stored as chart recorder records.

(c) *Software zero and span.* (1) The use of ''software'' zero and span is permitted. The process of software zero and span refers to the technique of initially adjusting the analyzer zero and span responses to the calibration curve values, but for subsequent zero and span checks the analyzer response is simply recorded without adjusting the analyzer gain. The observed analyzer response recorded from the subsequent check is mathematically corrected back to the calibration curve values for zero and span. The same mathematical correction is then applied to the analyzer's response to a sample of exhaust gas in order to compute the true sample concentration.

(2) The maximum amount of software zero and span mathematical correction is ±10 percent of full scale chart deflection.

(3) Software zero and span may be used to switch between ranges without adjusting the gain of the analyzer.

(4) The software zero and span technique may not be used to mask analyzer drift. The observed chart deflection before and after a given time period or event shall be used for computing the drift. Software zero and span may be used after the drift has been computed to mathematically adjust any span drift so that the ''after'' span check may be transformed into the ''before'' span check for the next segment.

(d) For bag sample analysis perform the following sequence:

(1) Warm-up and stabilize the analyzers; clean and/or replace filter elements, conditioning columns (if used), etc., as necessary.

(2) Obtain a stable zero reading.

(3) Zero and span the analyzers with zero and span gases. The span gases shall have concentrations between 75 and 100 percent of full-scale chart deflection. The flow rates and system pressures during spanning shall be approximately the same as those encountered during sampling. A sample bag may be used to identify the required analyzer range.

(4) Re-check zero response. If this zero response differs from the zero response recorded in paragraph (d)(3) of this section by more than 1 percent of full scale, then paragraphs (d) (2), (3), and (4) of this section should be repeated.

(5) If a chart recorder is used, identify and record the most recent zero and span response as the pre-analysis values.

(6) If ADC equipment is used, electronically record the most recent zero and span response as the pre-analysis values.

(7) Measure HC (except diesels), CO, CO_2, and NO_X sample and background concentrations in the sample bag(s) with approximately the same flow rates and pressures used in paragraph (d)(3) of this section. (Constituents measured continuously do not require bag analysis.)

(8) A post-analysis zero and span check of each range must be performed and the values recorded. The number of events that may occur between the pre and post checks is not specified. However, the difference between pre-analysis zero and span values (recorded in paragraph (d) (5) or (6) of this section) versus those recorded for the post-analysis check may not exceed the zero drift limit or the span drift limit of 2 percent of full scale chart deflection for any range used. Otherwise the test is void.

(e) For continuous sample analysis perform the following sequence:

(1) Warm-up and stabilize the analyzers; clean and/or replace filter elements, conditioning columns (if used), etc., as necessary.

(2) Leak check portions of the sampling system that operate at negative gauge pressures when sampling, and allow heated sample lines, filters, pumps, etc., to stabilize at operating temperature.

(3) *Optional:* Perform a hang-up check for the HFID sampling system:

(i) Zero the analyzer using zero air introduced at the analyzer port.

(ii) Flow zero air through the overflow sampling system. Check the analyzer response.

(iii) If the overflow zero response exceeds the analyzer zero response by 2 percent or more of the HFID full-scale deflection, hang-up is indicated and corrective action must be taken.

(iv) The complete system hang-up check specified in paragraph (f) of this section is recommended as a periodic check.

(4) Obtain a stable zero reading.

(5) Zero and span each range to be used on each analyzer used prior to the beginning of the cold cycle. The span gases shall have a concentration between 75 and 100 percent of full scale chart deflection. The flow rates and system pressures shall be approximately the same as those encountered during sampling. The HFID analyzer shall be zeroed and spanned through the overflow sampling system.

(6) Re-check zero response. If this zero response differs from the zero response recorded in paragraph (e)(5) of this section by more than 1 percent of full scale, then paragraphs (e) (4), (5), and (6) of this section should be repeated.

(7) If a chart recorder is used, identify and record the most recent zero and span response as the pre-analysis values.

(8) If ADC equipment is used, electronically record the most recent zero and span response as the pre-analysis values.

(9) Measure the emissions (HC required for diesels; NO_X, CO, CO_2 optional) continuously during the cold start cycle. Indicate the start of the test, the range(s) used, and the end of the test on the recording medium (chart paper or ADC equipment). Maintain approximately the same flow rates and system pressures used in paragraph (e)(5) of this section.

(10) Collect background HC, CO, CO_2, and NO_X in a sample bag.

(11) Perform a post-analysis zero and span check for each range used at the conditions specified in paragraph (e)(5) of this section. Record these responses as the post-analysis values.

(12) Neither the zero drift nor the span drift between the pre-analysis and post-analysis checks on any range used may exceed 3 percent for HC, or 2 percent for NO_X, CO, and CO_2, of full scale chart deflection, or the test is void. (If the HC drift is greater than 3 percent of full-scale chart deflection, hydrocarbon hang-up is likely.)

(13) Determine HC background levels for the cold start cycle by introducing the background sample into the overflow sample system.

(14) Determine background levels of NO_X, CO, or CO_2 (if necessary) by the bag technique outlined in paragraph (d) of this section.

(15) Repeat paragraphs (e) (4) through (14) of this section for the hot cycle. The post-analysis zero and span check for the cold start (or previous hot start) cycle may be used for the pre-analysis zero and span for the following hot start cycle.

(f) *HC hang-up.* If HC hang-up is indicated, the following sequence may be performed:

(1) Fill a clean sample bag with background air.

(2) Zero and span the HFID at the analyzer ports.

(3) Analyze the background air sample bag through the analyzer ports.

(4) Analyze the background air through the entire sample probe system.

(5) If the difference between the readings obtained is 2 percent or more of the HFID full scale deflection, clean the sample probe and the sample line.

(6) Reassemble the sample system, heat to specified temperature, and repeat the procedure in paragraphs (f) (1) through (6) of this section.

(g) For CH_3OH (where applicable), introduce test samples into the gas chromatograph and measure the concentration. This concentration is C_{MS} in the calculations.

(h) For HCHO (where applicable), introduce test samples into the high pressure liquid chromatograph and measure the concentration of formaldehyde as a dinitrophenylhydrazine derivative in acetonitrile. This concentration is C_{FS} in the calculations.

[54 FR 14602, Apr. 11, 1989, as amended at 60 FR 34375, June 30, 1995]

§ 86.1340–94 Exhaust sample analysis.

Section 86.1340–94 includes text that specifies requirements that differ from § 86.1340–90. Where a paragraph in § 86.1340–90 is identical and applicable to § 86.1340–94, this may be indicated by specifying the corresponding paragraph and the statement ''[Reserved]. For guidance see § 86.1340–90.''

(a) through (d)(6) [Reserved]. For guidance see § 86.1340–90.

(d)(7) Measure HC (except diesels), CH_4 (natural gas-fueled engines only), CO, CO_2, and NO_X sample bag(s) with approximately the same flow rates and pressures used in § 86.1340–90(d)(3). (Constituents measured continuously do not require bag analysis.)

(d)(8) through (h) [Reserved]. For guidance see § 86.1340–90.

[59 FR 48534, Sept. 21, 1994, as amended at 60 FR 34375, June 30, 1995]

§ 86.1341–90 Test cycle validation criteria.

(a) To minimize the biasing effect of the time lag between the feedback and reference cycle values, the entire engine speed and torque feedback signal sequence may be advanced or delayed in time with respect to the reference speed and torque sequence. If the feedback signals are shifted, both speed and torque must be shifted the same amount in the same direction.

(b) *Brake horsepower-hour calculation.* (1) Calculate the brake horsepower-

hour for each pair of engine feedback speed and torque values recorded. Also calculate the reference brake horsepower-hour for each pair of engine speed and torque reference values. Calculations shall be to five significant digits.

(2) In integrating the reference and the feedback horsepower-hour, all negative torque values shall be set equal to zero and included. If integration is performed at a frequency of less than 5 Hz, and if during a given time segment, the torque value changes from positive to negative or negative to positive, then the negative portion must be computed by linear interpolation and set equal to zero and the positive portion included. The same methodology shall be used for integrating both reference and actual brake horsepower-hour.

(c) *Regression line analysis to calculate validation statistics.* (1) Linear regressions of feedback value on reference value shall be performed for speed, torque and brake horsepower on 1 Hz data after the feedback shift has occurred (see paragraph (a) of this section). The method of least squares shall be used, with the best fit equation having the form:

$$y=mx+b$$

Where:

y = The feedback (actual) value of speed (rpm), torque (ft-lbs), or brake horsepower.

m = Slope of the regression line.

x = The reference value (speed, torque, or brake horsepower).

b = The y-intercept of the regression line.

(2) The standard error of estimate (SE) of y on x and the coefficient of determination (r^2) shall be calculated for each regression line.

(3) For a test to be considered valid, the criteria in Figure N90–11 must be met for both cold and hot cycles individually. Point deletions from the regression analyses are permitted where noted in Figure N90–11.

FIGURE N90–11

	Speed	Torque	BHP
Regression Line Tolerances			
Petroleum-fueled and methanol-fueled diesel engines			
Standard error of estimate (SE) of Y on X	100 rpm	13 pct. of power map maximum engine torque	8 pct. of power map maximum BHP.
Slope of the regression line, m	0.970 to 1.030	0.83–1.03 (hot), 0.77–1.03 (cold)	0.89–1.03 (hot), 0.87–1.03 (cold).
Coefficient of determination, r^2	[1] 0.9700	[1] 0.8800 (hot), [1] 0.8500 (cold)	[1] 0.9100.
Y intercept of the regression line, b	50 ρπμ	15 φτ-λβ	5.0
Gasoline-fueled and methanol-fueled Otto-cycle engines			
Standard error of estimate (SE) of Y on X	100 rpm	10% (hot), 11% (cold) of power map max. engine torque.	5% (hot), 6% (cold) of power map maximum BHP.
Slope of the regression line, m	0.980 to 1.020	0.92–1.03 (hot), 0.88–1.03 (cold)	0.93–1.03 (hot), 0.89–1.03 (cold).
Coefficient of determination, r^2	[1] 0.9700	[1] 0.9300 (hot), [1] 0.9000 (cold)	[1] 0.9400 (hot), [1] 0.9300 (cold).
Y intercept of the regression line, b	25 (hot), 40 (cold)	4%(hot), 5 (cold) of power map max. engine torque.	2.0% (hot), 2.5% (cold) of power map BHP.

[1] Minimum.

PERMITTED POINT DELETIONS FROM REGRESSION ANALYSIS

Condition	Points to be deleted
1. Wide Open Throttle and Torque Feedback < Torque Reference	Torque, and/or BHP.
2. Closed Throttle, Not an Idle Point, Torque Feedback > Torque Reference	Torque, and/or BHP.
3. Closed Throttle, Idle Point, and Torque Feedback = CITT (10 ft-lb)	Speed, and/or BHP.

For the purposes of this discussion:

An Idle Point is defined as a point having a Normalized Reference Torque of 0 and a Normalized Reference Speed of 0 and an engine tested as having a manual transmission has a CITT of 0. Point deletion may be applied either to the whole or to any part of the cycle. EXPSTB='00'

(4)(i) For petroleum-fueled and methanol-fueled diesel engines, the integrated brake horsepower-hour for each cycle (cold and hot start) shall be between −15 percent and +5 percent of the integrated brake horsepower-hour for the reference cycle, or the test is void.

(ii) For gasoline-fueled and methanol-fueled Otto-cycle engines, the integrated brake horsepower-hour of the feedback cycle shall be within 5 percent of the integrated brake horsepower-hour of the reference cycle for the cold cycle, or the test is void. The tolerance for the hot cycle shall be 4 percent.

(5) If a dynamometer test run is determined to be statistically or experimentally void, corrective action shall be taken. The engine shall then be allowed to cool (naturally or forced) and the dynamometer test rerun per § 86.1337 or be restarted at § 86.1336–84(e).

(d) For petroleum-fueled and methanol-fueled diesel engines, all reference torque values specified (in paragraph (f)(2) of appendix I to this part) as ''closed throttle'' shall be deleted from the calculation of cycle torque and power validation statistics.

[54 FR 14604, Apr. 11, 1989, as amended at 62 FR 47134, Sept. 5, 1997]

§ 86.1341–98 Test cycle validation criteria.

Section 86.1341–98 includes text that specifies requirements that differ from § 86.1341–90. Where a paragraph in § 86.1341–90 is identical and applicable to § 86.1341–98, this may be indicated by specifying the corresponding paragraph and the statement ''[Reserved]. For guidance see § 86.1341–90''

(a) Through (b)(2) [Reserved]. For guidance see § 86.1341–90.

(b)(3) All feedback torques due to accessory loads, either actual or simulated as defined in § 86.1327–90 (d)(4), shall be excluded from both cycle validation and the integrated work used for emissions calculations.

(4) For reference idle portions of the cycle where CITT is not applied, use measured torque values for cycle validation and the reference torque values for calculating the brake horsepower-hour value used in the emission calculations. For reference idle portions of the cycle where CITT is applied, use measured torque values for cycle validation and calculating the brake horsepower-hour value used in the emission calculations.

(c) Through (d) [Reserved]. For guidance see § 86.1341–90.

[62 FR 47135, Sept. 5, 1997]

§ 86.1342–90 Calculations; exhaust emissions.

(a) The final reported transient emission test results should be computed by using the following formula:

$$A_{WM} = \frac{(1/7)(g_C) + (6/7)(g_H)}{(1/7)(BHP - hr_C) + (6/7)(BHP - hr_H)}$$

Where:

(1) A_{WM} = Weighted mass emission level (HC, CO, CO_2, or NO_X) in grams per brake horsepower-hour and, if appropriate, the weighted mass total hydrocarbon equivalent, in grams per brake horsepower-hour.

(2) g_C = Mass emission level in grams or grams carbon mass equivalent, measured during the cold start test.

(3) g_H = Mass emission level in grams or grams carbon mass equivalent, measured during the hot start test.

(4) BHP − hr_C = Total brake horsepower-hour (brake horsepower integrated over time) for the cold start test.

(5) BHP–hr_H = Total brake horsepower-hour (brake horsepower integrated over time) for the hot start test.

(b) The mass of each pollutant for the cold start test and the hot start test for bag measurements and diesel continuously heated sampling system measurements is determined from the following equations:

(1) Hydrocarbon mass:

$HC_{mass} = V_{mix} \times Density_{HC} \times (HC_{conc}/10^6)$

(2) Oxides of nitrogen mass:

$NOx_{mass} = V_{mix} \times Density_{NO2} \times K_H \times (NOx_{conc}/10^6)$

(3) Carbon monoxide mass:

$CO_{mass} = V_{mix} \times Density_{CO} \times (CO_{conc}/10^6)$

(4) Carbon dioxide mass:

$CO_{2mass} = V_{mix} \times Density\ CO_2 \times (CO_{2conc}/10^2)$

(5) Methanol mass:

$CH3OH_{mass} = V_{mix} \times Density_{CH3OH} \times (CH3OH_{conc}/10^6)$

(6) Formaldehyde mass:

$HCHO_{mass} = V_{mix} \times Density_{HCHO} \times (HCHO_{conc}/10^6)$

(7) Total hydrocarbon equivalent mass:

(i)

$$THCE = HC_{mass} + \frac{13.8756}{32.042}\left(CH_3OH_{mass}\right) + \frac{13.8756}{30.0262}\left(HCHO_{mass}\right)$$

(c) The mass of each pollutant for the cold start test and the hot start test for flow compensated sample systems is determined from the following equations:

$$(1)\quad HC_{mass} = \sum_{i=1}^{n}\left[\frac{(HC_e)_i}{10^6}\times(V_{mix})_i\times(Density_{HC})\times\Delta T\right] - \frac{HC_d}{10^6}\left(1-\frac{1}{DF}\right)\times V_{mix}\times Density_{HC}$$

$$(2)\quad NOx_{mass} = K_H\times\sum_{i=1}^{n}\left[\frac{(NOx_e)_i}{10^6}\times(V_{mix})_i\times(Density_{NO_2})\times\Delta T\right] - K_H\times\frac{NOx_d}{10^6}\left(1-\frac{1}{DF}\right)\times V_{mix}\times Density_{NO_2}$$

$$(3)\quad CO_{mass} = \sum_{i=1}^{n}\left[\frac{(CO_e)_i}{10^6}\times(V_{mix})_i\times(Density_{CO})\times\Delta T\right] - \frac{CO_d}{10^6}\left(1-\frac{1}{DF}\right)\times V_{mix}\times Density_{CO}$$

$$(4)\quad CO2_{mass} = \sum_{i=1}^{n}\left[\frac{(CO_{2e})_i}{10^6}\times(V_{mix})_i\times(Density_{CO_2})\times\Delta T\right] - \frac{CO_{2_d}}{10^6}\left(1-\frac{1}{DF}\right)\times V_{mix}\times Density_{CO_2}$$

(d) Meaning of symbols:

(1)(i) HC_{mass} = Hydrocarbon emissions, in grams per test phase.

(ii) $Density_{HC}$ = Density of hydrocarbons = 16.33 g/ft³ (0.5768 kg/m³) for gasoline and the gasoline fraction of methanol-fuel, and may be used for petroleum and the petroleum fraction of methanol diesel fuel if desired, 16.42 g/ft³ (0.5800 kg/m³) for #l petroleum diesel fuel and 16.27 g/ft³ (0.5746 kg/m³) for #2 diesel, assuming an average carbon to hydrogen ratio of 1:1.85 for gasoline, 1:1.93 for #1 petroleum diesel fuel and 1:1.80 for #2 petroleum diesel fuel at 68 °F (20 °C) and 760 mm Hg (101.3 kPa) pressure.

(iii)(A) HC_{conc} = Hydrocarbon concentration of the dilute exhaust sample corrected for background, in ppm carbon equivalent (i.e., equivalent propane ×3).

(B) $HC_{conc} = HC_e - HC_d(1 - (1/DF))$

Where:

(iv)(A) HC_e = Hydrocarbon concentration of the dilute exhaust bag sample or, for diesel continuous heated sampling systems, average hydrocarbon concentration of the dilute exhaust

sample as determined from the integrated HC traces, in ppm carbon equivalent. For flow compensated systems $(HC_e)_i$ is the instantaneous concentration.

(B) For petroleum-fueled engines, HC_e is the FID measurement.

(C) For methanol-fueled engines:

HC_e = FID $HC_e - (r)C_{CH3OHe}$

(v) FID HC_e = Concentration of hydrocarbon plus methanol in dilute exhaust as measured by the FID, ppm carbon equivalent.

(vi) r = FID response to methanol.

(vii) C_{CH3OHe} = Concentration of methanol in dilute exhaust as determined from the dilute exhaust methanol sample, ppm carbon.

(viii)(A) HC_d = Hydrocarbon concentration of the dilution air as measured, in ppm carbon equivalent.

(B) HC_d = FID $HC_d - (r)C_{CH3OHd}$

(ix) FID HC_d = Concentration of hydrocarbon plus methanol in dilution air as measured by the FID, ppm carbon equivalent.

(x) C_{CH3OHd} = Concentration of methanol in dilution air as determined from dilution air methanol sample in ppm carbon.

(2)(i) NOx_{mass} = Oxides of nitrogen emissions, in grams per test phase.

(ii) $Density_{NO2}$ = Density of oxides of nitrogen is 54.16 g/ft^3 (1.913 kg/m^3), assuming they are in the form of nitrogen dioxide, at 68 °F (20 °C) and 760 mm Hg (101.3 kPa) pressure.

(iii)(A) NOx_{conc} = Oxides of nitrogen concentration of the dilute exhaust sample corrected for background, in ppm.

(B) $NOx_{conc} = NOx_e - NOx_d\ [1 - (1/DF)]$

Where:

(iv) NOx_e = Oxides of nitrogen concentration of the dilute exhaust bag sample as measured, in ppm. For flow compensated sample systems $(NOx_e)_i$ is the instantaneous concentration.

(v) NOx_d = Oxides of nitrogen concentration of the dilution air as measured, in ppm.

(3)(i) CO_{mass} = Carbon monoxide emissions, grams per test phase.

(ii) $Density_{CO}$ = Density of carbon monoxide is 32.97 g/ft^3 (1.164 kg/m^3), at 68 °F (20 °C) and 760 mm Hg (101.3 kPa) pressure.

(iii)(A) CO_{conc} = Carbon monoxide concentration of the dilute exhaust sample corrected for background, water vapor, and CO_2 extraction, ppm.

(B) $CO_{conc} = CO_e - CO_d[1 - (1/DF)]$

Where:

(iv) CO_e = Carbon monoxide concentration of the dilute exhaust bag sample volume corrected for water vapor and carbon dioxide extraction, in ppm. For flow compensated sample systems $(CO_e)_i$ is the instantaneous concentration.

(v)(A) $CO_e = (1 - 0.01925CO_{2e} - 0.000323R)CO_{em}$ for gasoline and petroleum diesel fuel, with hydrogen to carbon ratio of 1.85:1.

(B) $CO_e = [1 - (0.01 + 0.005HCR)\ CO_{2e} - 0.000323R]\ CO_{em}$ for methanol fuel, where HCR is hydrogen to carbon ratio as measured for the fuel used.

Where:

(vi) CO_{em} = Carbon monoxide concentration of the dilute exhaust sample as measured, in ppm.

(vii)(A) CO_{2e} = Carbon dioxide concentration of the dilute exhaust bag sample, in percent, if measured. For flow compensated sample systems, $(CO_{2e})_i$ is the instantaneous concentration. For cases where exhaust sampling of CO_2 is not performed, the following approximation is permitted:

(B)

$$CO_{2e} = \frac{44.010}{12.011 + (1.008\alpha)} \times \frac{M'(453.6)}{\text{Density } CO_2} \times \frac{100}{V_{mix}}$$

Where:

(C) α = Average carbon to hydrogen ratio, as specified by the Administrator.

(D) M′ = Fuel mass consumed during the test cycle.

(E) R = Relative humidity of the dilution air, percent.

(viii)(A) CO_d = Carbon monoxide concentration of the dilution air corrected for water vapor extraction, in ppm.

(B) $CO_d = (1 - 0.000323R)CO_{dm}$.

Where:

(ix) CO_{dm} = Carbon monoxide concentration of the dilution air sample as measured, in ppm.

NOTE: If a CO instrument which meets the criteria specified in § 86.1311 is used and the conditioning column has been deleted, CO_{em} must be substituted directly for CO_e, and CO_{dm} must be substituted directly for CO_d.

(4)(i) CO_{2mass} = Carbon dioxide emissions, in grams per test phase.

(ii) Density CO_2 = Density of carbon dioxide is 51.81 g/ft³ (1.830 kg/m³), at 68 °F (20 °C) and 760 mm Hg (101.3 kPa) pressure.

(iii) CO_{2conc} = Carbon dioxide concentration of the dilute exhaust sample corrected for background, in percent.

(iv) $CO_{2mass} = CO_{2e} - CO_{2d}[1 - (1/DF)]$.

Where:

(v) CO_{2d} = Carbon dioxide concentration of the dilution air as measured, in percent.

(5)(i) CH_3OH_{mass} = Methanol emissions corrected for background, in grams per test phase.

(ii) $Density_{CH3OH}$ = Density of methanol is 37.71 g/ft³ (1.332 kg/m³), at 68 °F (20 °C) and 760 mm Hg (101.3kPa) pressure.

(iii)(A) CH_3OH_{conc} = Methanol concentration of the dilute exhaust corrected for background, in ppm.

(B) $CH_3OH_{conc} = C_{CH3OHe} - C_{CH3OHd}[1 - (1/DF)]$.

Where:

(iv)(A) C_{CH3OHe} = Methanol concentration in the dilute exhaust, in ppm.

(B)

$$C_{CH3OHe} \frac{3.813 \times 10^{-2} \times C_{CH3OHR} \times T_{EM}\left[\left(A_{S1} \times AV_{S1}\right) + \left(A_{S2} \times AV_{S2}\right)\right]}{A_{CH3OHR} \times P_B \times V_{EM}}$$

(v)(A) C_{CH3OHd} = Methanol concentration in the dilution air, in ppm.

(B)

$$C_{CH3OHd} \frac{3.813 \times 10^{-2} \times C_{CH3OHR} \times T_{DM}\left[\left(A_{D1} \times AV_{D1}\right) + \left(A_{D2} \times AV_{D2}\right)\right]}{A_{CH3OHR} \times P_B \times V_{DM}}$$

(vi) C_{CH3OHR} = Concentration of methanol in standard sample for calibration of GC, µg/ml.

(vii) A_{CH3OHR} = GC peak area of standard sample.

(viii) T_{EM} = Temperature of methanol sample withdrawn from dilute exhaust, °R.

(ix) T_{DM} = Temperature of methanol sample withdrawn from dilution air, °R.

(x) P_B = Barometric pressure during test, mm Hg.

(xi) V_{EM} = Volume of methanol sample withdrawn from dilute exhaust, ft³.

(xii) V_{DM} = Volume of methanol sample withdrawn from dilution air, ft³.

(xiii) A_S = GC peak area of sample drawn from dilute exhaust.

(xiv) A_D = GC peak area of sample drawn from dilution air.

(xv) AV_S = Volume of absorbing reagent (deionized water) in impinger through which methanol sample from dilute exhaust is drawn, ml.

(xvi) AV_D = Volume of absorbing reagent (deionized water) in impinger through which methanol sample from dilution air is drawn, ml.

(xvii) 1 = first impinger.

(xviii) 2 = second impinger.

(6)(i) $HCHO_{mass}$ = Formaldehyde emissions corrected for background, grams per test phase.

(ii) $Density_{HCHO}$ = Density of formaldehyde is 35.36 g/ft³ (1.249 kg/m³), at 68 °F (20 °C) and 760 mmHg (101.3 kPa) pressure.

(iii)(A) $HCHO_{conc}$ = Formaldehyde concentration of the dilute exhaust corrected for background, ppm.

(B) $HCHO_{conc} = C_{HCHOe} - C_{HCHOd}\ [1 - (1/DF)]$.

Where:

(iv)(A) C_{HCHOe} = Formaldehyde concentration in dilute exhaust, ppm.

(B)

$$C_{HCHOe} = \frac{4.069 \times 10^{-2} \times C_{FDE} \times V_{AE} \times Q \times T_{EF}}{V_{SE} \times P_B}$$

(v)(A) C_{HCHOd} = Formaldehyde concentration in dilution air, ppm.

$$C_{HCHOd} = \frac{4.069 \times 10^{-2} \times C_{FDE} \times V_{AA} \times Q \times T_{DF}}{V_{SA} \times P_B}$$

(vi) C_{FDE} = Concentration of DNPH derivative of formaldehyde from dilute exhaust sample in sampling solution, μg/ml.

(vii) V_{AE} = Volume of sampling solution for dilute exhaust formaldehyde sample, ml.

(viii)(A) Q = Ratio of molecular weights of formaldehyde to its DNPH derivative.

(B) Q = 0.1429.

(ix) T_{EF} = Temperature of formaldehyde sample withdrawn from dilute exhaust, °R.

(x) V_{SE} = Volume of formaldehyde sample withdrawn from dilute exhaust, ft³.

(xi) P_B = Barometric pressure during test, mm Hg.

(xii) C_{FDA} = Concentration of DNPH derivative of formaldehyde from dilution air sample in sampling solution, μg/ml.

(xiii) V_{AA} = Volume of sampling solution for dilution air formaldehyde sample, ml.

(xiv) T_{DF} = Temperature of formaldehyde sample withdrawn from dilution air, °R.

(xv) V_{SA}=Volume of formaldehyde sample withdrawn from dilution air, ft³.

(7)(i) $DF=13.4/[CO_{2e}+(HC_e+CO_e)10^{-4}]$ for petroleum-fueled vehicles, or $DF=13.4/CO_{2e}$

$$\text{(ii)}\ DF = \frac{100 \times \left(\dfrac{x}{x + y/2 + 3.76(x + y/4 - z/2)} \right)}{CO_{2e} + \left(HC_e + CO_e + CH_3OH_e\right)10^{-4}}$$

for methanol-fueled vehicles, where fuel composition is $C_X\ H_y\ O_z$ as measured for the fuel used.

(8)(i) K_H = Humidity correction factor.

(ii) For gasoline-fueled and methanol-fueled diesel engines: $K_H = 1/[1 - 0.0047\ (H - 75)]$ (or for SI units, $K_H = 1/[1 - 0.0329(H - 10.71)]$).

(iii) For petroleum-fueled and methanol-fueled diesel engines: $K_H = 1/[1 - 0.0026 (H - 75)]$ (or for SI units = $1/[1 - 0.0182 (H - 10.71)]$).

Where:

(iv)(A) H = Absolute humidity of the engine intake air in grains (grams) of water per pound (kilogram) of dry air.

(B)(*1*) $H = [(43.478)R_i \times P_d]/[P_B - (P_d \times R_i/100)]$

(*2*) *For SI units,*

$H = [(6.211)R_i \times P_d]/[P_B - (P_d \times R_i/100)]$

(C) R_i = Relative humidity of the engine intake air, percent.

(D) P_d = Saturated vapor pressure, in mm Hg (kPa) at the engine intake air dry bulb temperature.

(E) P_B = Barometric pressure, in mm Hg (kPa).

(9)(i) V_{mix} = Total dilute exhaust volume in cubic feet per test phase corrected to standard conditions (528°R) (293°K) and 760 mm Hg (101.3 kPa).

(ii) $(V_{mix})_i$ = Instantaneous dilute exhaust volumetric flow rate (for compensated flow systems), ft^3/sec.

(iii) T = Time interval (seconds) between samples in flow compensated systems.

(iv) T = Total sampling time (seconds).

(v) *For PDP–CVS:*

(A)

$$V_{mix} = V_o \times \left(\frac{N(P_B - P_4)(528)}{(760)(T_p)} \right)$$

(B) *For SI units,*

$$V_{mix} = V_o \times \left(\frac{N(P_B - P_4)(293)}{(101.3)(T_p)} \right)$$

Where:

(vi) V_o = Volume of gas pumped by the positive displacement pump, in cubic feet (cubic meters) per revolution. This volume is dependent on the pressure differential across the positive displacement pump.

(vii) N = Number of revolutions of the positive displacement pump during the test phase while samples are being collected.

(viii) P_B = Barometric pressure, mm Hg (kPa).

(ix) P_4 = Pressure depression below atmospheric measured at the inlet to the positive displacement pump, in mm Hg (kPa) (during an idle mode).

(x) T_p = Average temperature of dilute exhaust entering positive displacement pump during test, °R (°K).

(e) Sample calculation of mass values of exhaust emissions:

(1) Assume the following test results for a gasoline engine:

	Cold start cycle test results	Hot start cycle test results
V_{mix}	6924 ft^3	6873 ft^3.
R	30.2 percent	30.2 percent.
R_i	30.2 percent	30.2 percent.
P_B	735 mm Hq	735 mm Hg.
P_d	22.676 mm Hq	22.676 mm Hq.
HC_e	132.07 ppm C equiv	86.13 ppm C equiv.
NO_{xe}	7.86 ppm	10.98 ppm.
CO_{em}	171.22 ppm	114.28 ppm.
CO_{2e}	0.178 percent	0.381 percent.
HC_d	3.60 ppm C equiv	8.70 ppm C equiv.
NO_d	0.0 ppm	0.10 ppm.
CO_{dm}	0.89 ppm	0.89 ppm.
$C0_{2d}$	0.0 percent	0.038 percent.
BHP–hr	0.259	0.347.

Then:

(2) *Cold Start Test:*

(i) H
= [(43.478)(30.2)(22.676)]/[735 − (22.676)(30.2)/100]
= 41 grains of water per pound of dry air.

(ii) $K_H = 1/[1 - 0.0047(41–75)] = 0.862$

(iii) CO_e
= [1 − 0.01925(.178) − 0.000323(30.2)]171.22
= 169.0 ppm

(iv) CO_d=[1 − 0.000323(30.2)] 0.89= 0.881 ppm

(v) DF
= 13.4/[.178 + (132.07 + 169.0)(10^{-4})]
= 64.390

(vi) HC_{conc}
= 132.07 − 3.6[1 − (1/64.390)]
= 128.5 ppm

(vii) HC_{mass}
= 6924(16.33)(128.5/10^6)
= 14.53 grams

(viii) NOx_{conc}
= 7.86 − 0.0[1 − (1/64.390)]
= 7.86 ppm

(ix) NOx_{mass}
= 6924(54.16)(.862)(7.86/10^6)
= 2.54 grams

(x) CO_{conc}
= 169.0 − .881[1 − (1/64.390)]
= 168.0 ppm

(xi) CO_{mass}

$= 6924(32.97)(168.0/10^6)$
$= 38.35$ grams

(xii) $CO_{2conc} = .178 - 0[1 - 1/64.390)] = 0.178\%$

(xiii) $CO_{2mass} = 6924(51.81)(.178/100) = 639$ grams

(3) *Hot start test:* Similar calculations result in the following:

(i) $HC_{mass} = 8.72$ grams

(ii) $NOx_{mass} = 3.49$ grams

(iii) $CO_{mass} = 25.70$ grams

(iv) $CO_{2mass} = 1226$ grams

(4) Weighted mass emission results:

(i) $HC_{wm} = 1/7(14.53) + 6/7(8.72)/1/7(0.259) + 6/7(0.347) = 28.6$ grams/BHP − hr

(ii) $NO_{Xwm} = 1/7(2.54) + 6/7(3.49)/1/7(0.259) + 6/7(0.347) = 10.0$ grams/BHP − hr

(iii) $CO_{wm} = 1/7(38.35) + 6/7(25.70)/1/7(0.259) + 6/7(0.347) = 82.2$ grams/BHP − hr

(iv) $CO_{2wm} = 1/7(639) + 6/7(1226)/1/7(0.259) + 6/7(0.347) = 3415$ grams/BHP − hr

(f) The final reported brake-specific fuel consumption (BSFC) shall be computed by use of the following formula:

$$BSFC = \frac{1/7(M_C) + 6/7(M_H)}{1/7(BHP\text{–}hr_C) + 6/7(BHP\text{–}hr_H)}$$

Where:

(1) BSFC = brake-specific fuel consumption in pounds of fuel per brake horsepower-hour (lbs/BHP–hr).

(2) M_C = mass of fuel, in lbs, used by the engine during the cold start test.

(3) M_H = mass of fuel, in lbs, used by the engine during the hot start test.

(4) $BHP\text{–}hr_C$ = total brake horsepower-hours (brake horsepower integrated with respect to time) for the cold start test.

(5) $BHP\text{–}hr_H$ = total brake horsepower-hours (brake horsepower integrated with respect to time) for the hot start test.

(g)(1) The mass of fuel for the cold start and hot start test is determined from mass fuel flow measurements made during the tests, or from the following equation:

$M = (G_s/R_2)(1/453.6)$

(2) Meaning of symbols:

(i) M = Mass of fuel, in lbs, used by the engine during the cold or hot start test.

(ii) G_s = Grams of carbon measured during the cold or hot start test:

$$G_s = \left[\frac{12.011}{12.011 + \alpha(1.008)}\right] HC_{mass} + 0.429CO_{mass} + 0.273CO_{2mass}$$

Where:

(iii) HC_{mass} = Hydrocarbon emissions, in grams, for cold or hot start test.

(iv) CO_{mass} = Carbon monoxide emissions, in grams, for cold or hot start test.

(v) CO_{2mass} = Carbon dioxide emissions, in grams, for cold or hot start test.

(vi) α = The atomic hydrogen to carbon ratio of the fuel.

(vii)(A) R_2 = The grams of carbon in the fuel per gram of fuel.

(B) $R_2 = 12.011/[12.011 + \alpha(1.008)]$

(h) Sample calculation of brake-specific fuel consumption:

(1) Assume the following test results:

	Cold start cycle test results	Hot start cycle test results
BHP-hr	6.945	7.078
α	1.85	1.85
HC_{mass} (grams)	37.08	28.82
CO_{mass} (grams)	357.69	350.33
$C0_{2mass}$ (grams)	5,419.62	5,361.32

Then:

(i) G_s for cold start test = [12.011/(12.011 + (1.008)(1.85))](37.08) + 0.429(357.69) + 0.273(5419.62) = 1665.10 grams

(ii) G_s for hot start test = [12.011/(12.011 + (1.008)(1.85))](28.82) + 0.429(350.33) + 0.273(5361.32) = 1638.88 grams

(iii) $R_2 = 12.011/[12.011 + (1.008)1.85] = 0.866$

(iv)(A) $M_c = (1665.10/.866)(1/453.6) = 4.24$ lbs (calculated), or

(B) = 4.24 lbs (directly measured).

(v)(A) M_H = (1638.88/.866)(1/453.6) = 4.17 lbs (calculated), or

(B) = 4.17 lbs (directly measured).

(2) Brake-specific fuel consumption results:

BSFC = (1/7)(4.24) +(6/7)(4.17)/(1/7)(6.945) + (6/7)(7.078) = 0.592 lbs of fuel/BHP − hr

(i) For dilute sampling systems which require conversion of as-measured dry concentrations to wet concentrations, the following equation shall be used for any combination of bagged, continuous, or fuel mass-approximated sample measurements (except for CO measurements made through conditioning columns, as explained in paragraph (d)(3) of this section):

Wet concentration = K_w × dry concentration.

Where:

(1)(i) For English units,

$K_w = 1-(\alpha/200) \times CO_{2e}(') - ((1.608 \times H)/(7000 + 1.608 \times H))$

See paragraph (d)(1) of this section for α values.

(ii) For SI units,

$K_w = 1-(\alpha/200) \times CO_{2e}(') - ((1.608 \times H)/(1000 + 1.608 \times H))$

See paragraph (d)(1) of this section for α values.

(2) $CO_{2e}(')$ = either CO_{2e} or CO_{2e}' as applicable.

(3)(i) H = Absolute humidity of the CVS dilution air, in grains (grams) of water per lb (kg) of dry air.

(ii) For English units,

$H' = [(43.478)R_i' \times P_d']/[P_B - (P_d' \times R_i'/100)]$

(iii) For SI units,

$H' = [(6.211)R_i' \times P_d']/[P_B - (P_d' \times R_i'/100)]$

(4) R_i = Relative humidity of the CVS dilution air, in percent.

(5) P_d = Saturated vapor pressure, in mm Hg (kPa) at the ambient dry bulb temperature of the CVS dilution air.

(6) P_B = Barometric pressure, mm Hg (kPa).

[54 FR 14605, Apr. 11, 1989, as amended at 62 FR 47135, Sept. 5, 1997]

§ 86.1342–94 Calculations; exhaust emissions.

Section 86.1342–94 includes text that specifies requirements that differ from § 86.1342–90. Where a paragraph in § 86.1342–90 is identical and applicable to § 86.1342–94, this may be indicated by specifying the corresponding paragraph and the statement ''[Reserved]. For guidance see § 86.1342–90.''

(a) introductory text [Reserved]. For guidance see § 86.1342–90.

(a)(1) A_{WM}=Weighted mass emission level (HC, CO, CO_2, or NO_X) in grams per brake horsepower-hour and, if appropriate, the weighted mass total hydrocarbon equivalent, formaldehyde, or non-methane hydrocarbon emission level in grams per brake horsepower-hour.

(a)(2) through (b)(7) [Reserved]. For guidance see § 86.1342–90.

(b)(8) Non-methane hydrocarbon mass:

$NMHC_{mass} = V_{mix} \times Density_{NMHC} \times (NMHC_{conc}/1{,}000{,}000)$

(c) through (d)(1)(i) [Reserved]. For guidance see § 86.1342–90.

(d)(1)(ii) $Density_{HC}$ = Density of hydrocarbons.

(A) For gasoline and the gasoline fraction of methanol-fuel, and may be used for petroleum and the petroleum fraction of methanol diesel fuel if desired; 16.33 g/ft^3-carbon atom (0.5768 kg/m^3-carbon atom).

(B) For #1 petroleum diesel fuel; 16.42 g/ft^3-carbon atom (0.5800 kg/m^3-carbon atom).

(C) For #2 diesel 16.27 g/ft^3-carbon atom (0.5746 kg/m^3-carbon atom). Average carbon to hydrogen ratios of 1:1.85 for gasoline, 1:1.93 for #1 petroleum diesel fuel and 1:1.80 for #2 petroleum diesel fuel are assumed at 68 °F (20 °C) and 760 mm Hg (101.3 kPa) pressure.

(D) For natural gas and liquified petroleum gas-fuel; 1.1771 (12.011+H/C (1.008)) g/ft^3-carbon atom (0.04157 (12.011+H/C (1.008)) kg/m^3-carbon atom) where H/C is hydrogen to carbon ratio of the hydrocarbon components of the test fuel, at 68 °F (20 °C) and 760 mm Hg (101.3 kPa) pressure.

(d)(1)(iii) through (d)(1)(iv)(A) [Reserved]. For guidance see § 86.1342–90.

(d)(1)(iv)(B) For petroleum-fueled, natural gas-fueled and liquified petroleum gas-fueled engines, HC_e is the FID measurement.

(d)(1)(iv)(C) through (d)(3)(v)(A) [Reserved]. For guidance see § 86.1342–90.

(d)(3)(v)(B) CO_e = [1 − (0.01 + 0.005HCR) CO_{2e} − 0.000323R] CO_{em} for methanol-fuel, natural gas-fuel and liquified petroleum gas-fuel where HCR is hydrogen to carbon ratio as measured for the fuel used.

Where:

(d)(3)(vi) through (d)(5)(iii)(B) [Reserved]. For guidance see § 86.1342–90.

(d)(5)(iv)(A) C_{CH3OHe}=Methanol concentration in the dilute exhaust, in ppm.

(B)

$$C_{CH3OHe} = \frac{3.813\times10^{-2}\times T_{EM}\left[\left(C_{S1}\times AV_{S1}\right)+\left(C_{S2}\times AV_{S2}\right)\right]}{P_B\times V_{EM}}$$

(v)(A) C_{CH3OHd}=Methanol concentration in the dilution air, in ppm

(B)

$$C_{CH3OHd} = \frac{3.813\times10^{-2}\times T_{DM}\left[\left(C_{D1}\times AV_{D1}\right)+\left(C_{D2}\times AV_{D2}\right)\right]}{P_B\times V_{DM`}}$$

(vi) T_{EM}=Temperature of methanol sample withdrawn from dilute exhaust, °R

(vii) T_{DM}=Temperature of methanol sample withdrawn from dilution air, °R

(viii) P_B=Barometric pressure during test, mm Hg.

(ix) V_{EM}=Volume of methanol sample withdrawn from dilute exhaust, ft^3

(x) V_{DM}=Volume of methanol sample withdrawn from dilution air, ft^3

(xi) C_S=GC concentration of sample drawn from dilute exhaust

(xii) C_D=GC concentration of sample drawn from dilution air

(xiii) AV_S=Volume of absorbing reagent (deionized water) in impinger through which methanol sample from dilute exhaust is drawn, ml

(xiv) AV_D=Volume of absorbing reagent (deionized water) in impinger through which methanol sample from dilution air is drawn, ml

(xv) 1=first impinger.

(xvi) 2=second impinger.

(d)(6)(i) through (d)(7)(i) [Reserved]. For guidance see § 86.1342–90.

(d)(7)(ii) For methanol-fueled vehicles, where fuel composition is C_X H_y O_z as measured, or calculated, for the fuel used:

$$DF = \frac{\dfrac{x}{(100)x + y/2 = 3.76\left(x + y/2 - z/2\right)}}{CO_{2e} + \left(HC_e + CO_e + CH_3OH_e + HCHO_e\right)}$$

(d)(8)(i) [Reserved]. For guidance see § 86.1342–90.

(d)(8)(ii) For Otto-cycle engines: K_H=1/[1–0.0047(H–75)] (or for SI units, K_H=1/[1–0.0329(H–10.71)]).

(iii) For diesel engines: K_H = 1/[1–0.0026 (H–75)] (or for SI units = 1/[1–0.0182 (H–10.71)]).

Where:

(d)(8)(iv) through (d)(9)(x) [Reserved]. For guidance see § 86.1342–90.

(d)(10)(i) $NMHC_{conc} = HC_{conc} – CH4_{conc}$

(ii) $Density_{NMHC}$ = The density of non-methane hydrocarbon, is 1.1771(12.011 + H/C (1.008)) g/ft^3-carbon atom (0.04157(12.011 + H/C (1.008))kg/m^3-carbon atom), where H/C is the hydrogen to carbon ratio of the non-methane hydrocarbon components of the test fuel, at 68 °F (20 °C) and 760 mm Hg (101.3 kPa) pressure.

(iii)(A) CH_{4conc} = Methane concentration of the dilute exhaust sample corrected for background, in ppm carbon equivalent.

(B) $CH_{4conc} = r_{CH4} \times (CH_{4e} – CH_{4d}(1–1/DF))$

Where:

(*1*) CH_{4e} = Methane exhaust bag concentration in ppm carbon equivalent.

(*2*) CH_{4d} = Methane concentration of the dilution air in ppm carbon equivalent.

(*3*) r_{CH4} = HC FID response to methane for natural gas-fueled vehicles as measured in § 86.1321 (d).

(e) Through (i) [Reserved]. For guidance see § 86.1342–90.

[59 FR 48534, Sept. 21, 1994, as amended at 60 FR 34375, June 30, 1995; 62 FR 47135, Sept. 5, 1997]

§ 86.1343–88 Calculations; particulate exhaust emissions.

(a) The final reported transient emission test results shall be computed by use of the following formula:

$$P_{wm} = \frac{1/7\ P_C + 6/7\ P_H}{1/7\ BHP-hr_C + 6/7\ BHP-hr_H}$$

(1) P_{wm} = Weighted mass particulate, grams per brake horsepower-hour.

(2) P_C = Mass particulate measured during the cold-start test, grams.

(3) P_H = Mass particulate measured during the hot-start test, grams.

(4) $BHP\text{-}hr_C$ = Total brake horsepower-hour (brake horsepower integrated with respect to time) for the cold-start test.

(5) $BHP\text{-}hr_H$ = Total brake horsepower-hour (brake horsepower integrated with respect to time) for the hot-start test.

(b) The mass of particulate for the cold-start test and the hot-start test is determined from the following equation:

$$P_{mass} = (V_{mix} + V_{sf}) \times \left[\frac{P_f}{V_{sf}} - \left(\frac{P_{bf}}{V_{bf}} \times [1-(1/DF)] \right) \right]$$

(1) P_{mass} = Mass of particulate emitted per test phase, grams per test phase. ($P_H = P_{mass}$ for the hot-start test and $P_C = P_{mass}$ for the cold-start test.

(2) V_{mix} = Total dilute exhaust volume corrected to standard conditions (528° R (293° K) and 760 mm Hg (101.3 kPa)), cubic feet per test phase. For a PDP–CVS:

$$V_{mix} = V_o \times \frac{N(P_B - P_4)(528°R)}{(760\ mm\ H_g)(T_p)},$$

in SI units,

$$V_{mix} = V_o \times \frac{N(P_B - P_4)(293°K)}{(101.3\ kPa)(T_p)},$$

Where:

(2)(i)(A) For a CFV–CVS: V_{mix} = Total dilute exhaust volume corrected to standard conditions (293 °K (20 °C) and 101.3 kPa (760 mm Hg)), cubic feet per test phase.

(B) For a PDP–CVS:

$$V_{mix} = V_o \times \frac{N(P_B - P_4)(528°R)}{(760mmHg)(T_p)},$$

in SI units,

$$V_{mix} = V_o \times \frac{N(P_B - P_4)(293°K)}{(101.3kPa)(T_p)},$$

Where:

(ii) V_o = Volume of gas pumped by the positive displacement pump, cubic

feet (cubic meters) per revolution. This volume is dependent on the pressure differential across the positive displacement pump.

(iii) N = Number of revolutions of the positive displacement pump during the test phase while samples are being collected.

(iv) P_B = Barometric pressure, mm Hg (kPa).

(v) P_4 = Pressure depressions below atmospheric measured at the inlet to the positive displacement pump (during an idle mode), mm Hg (kPa).

(vi) T_p = Average temperature of dilute exhaust entering the positive displacement pump during test, °R (°K).

(3) V_{sf} = Total volume of sample removed from the primary dilution tunnel, cubic feet at standard conditions.

(i) For a single-dilution system:

$$V_{sf} \frac{V_{as} \times \left(P_B + P_{is}\right) \times 528° R}{T_{is} \times 760 \text{ mm Hg},}$$

Where:

(A) V_{as} = Actual volume of dilute sample removed from the primary-dilution tunnel, cubic feet.

(B) P_B = Barometric pressure, mm Hg.

(C) P_{is} = Pressure elevation above ambient measured at the inlet to the dilute exhaust sample gas meter or flow instrumentation, mm Hg. (For most gas meters or flow instruments with unrestricted discharge, P_{is} is negligible and can be assumed = 0.)

(D) T_{is} = Average temperature of the dilute exhaust sample at the inlet to the gas meter or flow instrumentation, °R.

(E) V_{sf} may require correction according to § 86.1320–87(a)(6).

(ii) For a double-dilution system:

$$V_{sf} = V_{vf} - V_{pf}'$$

Where:

$$V_{vf} = \frac{V_{av} \times (P_B + P_{iv}) \times 528° R}{T_{iv} \times 760 \text{ mm Hg}}$$

(B) V_{av} = Actual volume of double diluted sample which passed through the particulate filter, cubic feet.

(C) P_B = Barometric pressure, mm Hg.

(D) P_{iv} = Pressure elevation above ambient measured at the inlet to the sample gas meter located at the exit side of the secondary-dilution tunnel, mm Hg. (For most gas meters with unrestricted discharge P_{iv} is negligible and can be assumed = 0.)

(E) T_{iv} = Average temperature of the dilute exhaust sample at the inlet to the exit side gas meter or flow instrumentation, °R.

$$V_{pf} = \frac{V_{ap} \times \left(P_a + P_{ip}\right) \times 528° R}{T_{ip} \times 760 \text{ mm Hg}}$$

(G) V_{ap} = Actual volume of secondary dilution air, cubic feet.

(H) P_a = Barometric pressure, mm Hg.

(I) P_{ip} = Pressure elevation above ambient measured at the inlet to the sample gas meter or flow instrumentation located at the inlet side of the secondary dilution tunnel, mm Hg. (For most gas meters with unrestricted discharge P_{ip} is negligible and can be assumed = 0.)

(J) T_{ip} = Average temperature of the secondary dilution air at the inlet to the inlet side gas meter or flow instrumentation, °R.

(K) Both V_{vf} and V_{pf} may require correction according to § 86.1320–87(a)(6). These corrections must be applied before V_{sf} is determined.

(4) P_f = Mass of particulate on the sample filter (or sample and back-up filters if the back-up filter is required to be included, see § 86.1339–87(g) for determination), grams per test phase.

(5) P_{bf} = Net weight of particulate on the background particulate filter, grams.

$$V_{bf} = \frac{V_{ab} \times \left(P_B + P_{ib}\right) \times 528° R,}{T_{ib} \times 760 \text{ mm Hg}}$$

Where:

(i) V_{ab} = Actual volume of primary dilution air sampled by background particulate sampler, cubic feet.

(ii) P_{ib} = Pressure elevation above ambient measured at the inlet to the background gas meter or flow instrument, mm Hg. (for most gas meters or flow instruments with unrestricted discharge, P_{ib} is negligible and can be assumed = 0.)

(iii) T_{ib} = Average temperature of the background sample at the inlet to the gas meter or flow instrument, °R.

(7) For definition of DF see §86.1342–84(d)(5).

(8)(i) Real time flow rate measurement and calculating devices are permitted under these regulations. The appropriate changes in the above calculations shall be made using sound engineering principles.

(ii) Other systems and options, as permitted under these regulations, may require calculations other than these, but these must be based on sound engineering principles and be approved in advance by the Administrator at the time the alternate system is approved.

(Secs. 202, 203, 206, 207, 208, 301a, Clean Air Act, as amended; 42 U.S.C. 7521, 7522, 7525, 7541, 7542, 7601a)

[50 FR 10706, Mar. 15, 1985, as amended at 52 FR 47876, Dec. 16, 1987; 62 FR 47135, Sept. 5, 1997]

§86.1344–90 Required information.

(a) The required test data shall be grouped into the following three general categories:

(1) *Engine set up and descriptive data.* These data must be provided to the EPA supervisor of engine testing for each engine sent to the Administrator for confirmatory testing prior to the initiation of engine set-up. These data are necessary to ensure that EPA test personnel have the correct data in order to set up and test the engine in a timely and proper manner. These data are not required for tests performed by the manufacturers.

(2) *Pre-test data.* These data are general test data that must be recorded for each test. The data are of a more descriptive nature such as identification of the test engine, test site number, etc. As such, these data can be recorded at any time within 24 hours of the test.

(3) *Test data.* These data are physical test data that must be recorded at the time of testing.

(b) When requested, data shall be supplied in the format specified by the Administrator.

(c) *Engine set-up data.* Because specific test facilities may change with time, the specific data parameters and number of items may vary. The Application Format for Certification for the applicable model year will specify the exact requirements. In general, the following types of data will be required:

(1) Engine manufacturer.

(2) Engine system combination.

(3) Engine code and CID.

(4) Engine identification number.

(5) Applicable engine model year.

(6) Engine fuel type.

(7) Recommended oil type.

(8) Exhaust pipe configuration, pipe sizes, etc.

(9) Curb or low idle speed.

(10) Dynamometer idle speed. (Automatic transmission engines only.)

(11) Engine parameter specifications such as spark timing, operating temperature, advance curves, etc.

(12) Engine performance data, such as maximum BHP, previously measured rated rpm, fuel consumption, governed speed, etc.

(13) Recommended start-up procedure.

(14) Maximum safe engine operating speed.

(15) Number of hours of operation accumulated on engine.

(16) Manufacturer's recommended inlet depression limit and typical in-use inlet depression level.

(17) Exhaust system:

(i) *Petroleum-fueled and methanol-fueled diesel engines:*

(A) Header pipe inside diameter.

(B) Tailpipe inside diameter.

(C) Minimum distance in-use between the exhaust manifold flange and the exit of the chassis exhaust system.

(D) Manufacturer's recommended maximum exhaust backpressure limit for the engine.

(E) Typical backpressure, as determined by typical application of the engine.

(F) Minimum backpressure required to meet applicable noise regulations.

(ii) *Gasoline-fueled and methanol-fueled Otto-cycle engines:* Typical in-use backpressure in vehicle exhaust system.

(d) *Pre-test data.* The following data shall be recorded, and reported to the Administrator for each test conducted for compliance with the provisions of CFR part 86, subpart A:

(1) Engine-system combination.

(2) Engine identification.

(3) Instrument operator(s).

(4) Engine operator(s).

(5) Number of hours of operation accumulated on the engine prior to beginning the test sequence (Figure N84–10).

(6) Identification and specifications of test fuel used.

(7) Date of most recent analytical assembly calibration.

(8) All pertinent instrument information such as tuning, gain, serial numbers, detector number, calibration curve number, etc. As long as this information is traceable, it may be summarized by system or analyzer identification numbers.

(e) *Test data.* The physical parameters necessary to compute the test results and ensure accuracy of the results shall be recorded for each test conducted for compliance with the provisions of 40 CFR part 86, subpart A. Additional test data may be recorded at the discretion of the manufacturer. Extreme details of the test measurements such as analyzer chart deflections will generally not be required on a routine basis to be reported to the Administrator for each test, unless a dispute about the accuracy of the data arises. The following types of data shall be required to be reported to the Administrator. The Application Format for Certification for the applicable model year will specify the exact requirements which may change slightly from year to year with the addition or deletion of certain items.

(1) Date and time of day.

(2) Test number.

(3) Engine intake air or test cell temperature.

(4) Barometric pressure. (A central laboratory barometer may be used: *Provided*, that individual test cell barometric pressures are shown to be within ±0.1 percent of the barometric pressure at the central barometer location.)

(5) Engine intake or test cell and CVS dilution air humidity.

(6) Maximum torque versus speed curve as determined in § 86.1332, with minimum and maximum engine speeds, and a description of the mapping technique used.

(7) Measured maximum horsepower and maximum torque speeds.

(8) Measured maximum horsepower and torque.

(9) Measured high idle engine speed (governed petroleum-fueled and methanol-fueled diesel engines only).

(10) Measured fuel consumption at maximum power and torque (petroleum-fueled and methanol-fueled diesel engines only).

(11) Cold-soak time interval and cool down procedures.

(12) Temperature set point of the heated continuous analysis system components (if applicable).

(13) Test cycle validation statistics as specified in § 86.1341 for each test phase (cold and hot).

(14) Total CVS flow rate with dilution factor for each test phase (cold and hot).

(15) Temperature of the dilute exhaust mixture and secondary dilution air (in the case of a double dilution system) at the inlet to the respective gas meter(s) or flow instrumentation used for particulate sampling.

(16) The maximum temperature of the dilute exhaust mixture immediately ahead of the particulate filter.

(17) Sample concentrations (background corrected) for HC, CO, CO_2, and NO_X for each test phase (cold and hot).

(18) *For methanol-fueled vehicles:*

(i) Volume of sample passed through the methanol sampling system and the volume of deionized water in each impinger.

(ii) The methanol concentration in the reference sample and the peak area from the GC analysis of the reference sample.

(iii) The peak area of the GC analyses of the test samples (methanol).

(iv) Volume of sample passed through the formaldehyde sampling system.

(v) The formaldehyde concentration in the reference sample and the peak area from the LC analysis of the reference sample.

(vi) The peak area of the LC analysis of the test sample (formaldehyde).

(vii) Specification of the methanol-fuel used during testing.

(19) The stabilized pre-test weight and post-test weight of each particulate sample and back-up filter or pair of filters.

(20) Brake specific emissions (g/BHP-hr) for HC, CO, NO_X and, if applicable, THCE, CH_3OH and HCHO for methanol-fueled vehicles for each test phase (cold and hot).

(21) The weighted (cold and hot) brake specific emissions (g/BHP-hr) for the total test.

(22) The weighted (cold and hot) carbon balance or mass-measured brake specific fuel consumption for the total test.

(23) The number of hours of operation accumulated on the engine after completing the test sequences described in Figure N84–10.

[54 FR 14610, Apr. 11, 1989]

§86.1344–94 Required information.

(a) The required test data shall be grouped into the following three general categories:

(1) *Engine set up and descriptive data.* These data must be provided to the EPA supervisor of engine testing for each engine sent to the Administrator for confirmatory testing prior to the initiation of engine set-up. These data are necessary to ensure that EPA test personnel have the correct data in order to set up and test the engine in a timely and proper manner. These data are not required for tests performed by the manufacturers.

(2) *Pre-test data.* These data are general test data that must be recorded for each test. The data are of a more descriptive nature such as identification of the test engine, test site number, etc. As such, these data can be recorded at any time within 24 hours of the test.

(3) *Test data.* These data are physical test data that must be recorded at the time of testing.

(b) When requested, data shall be supplied in the format specified by the Administrator.

(c) *Engine set-up data.* Because specific test facilities may change with time, the specific data parameters and number of items may vary. The Application Format for Certification for the applicable model year will specify the exact requirements. In general, the following types of data will be required:

(1) Engine manufacturer.

(2) Engine system combination.

(3) Engine code and CID.

(4) Engine identification number.

(5) Applicable engine model year.

(6) Engine fuel type.

(7) Recommended oil type.

(8) Exhaust pipe configuration, pipe sizes, etc.

(9) Curb or low idle speed.

(10) Dynamometer idle speed (automatic transmission engines only).

(11) Engine parameter specifications such as spark timing, operating temperature, advance curves, etc.

(12) Engine performance data, such as maximum BHP, previously measured rated rpm, fuel consumption, governed speed, etc.

(13) Recommended start-up procedure.

(14) Maximum safe engine operating speed.

(15) Number of hours of operation accumulated on engine.

(16) Manufacturer's recommended inlet depression limit and typical in-use inlet depression level.

(17) Exhaust system:

(i) *Diesel engines:*

(A) Header pipe inside diameter.

(B) Tailpipe inside diameter.

(C) Minimum distance in-use between the exhaust manifold flange and the exit of the chassis exhaust system.

(D) Manufacturer's recommended maximum exhaust backpressure limit for the engine.

(E) Typical backpressure, as determined by typical application of the engine.

(F) Minimum backpressure required to meet applicable noise regulations.

(ii) *Otto-cycle engines:* Typical in-use backpressure in vehicle exhaust system.

(d) *Pre-test data.* The following data shall be recorded and reported to the Administrator for each test conducted for compliance with the provisions of subpart A of this part:

(1) Engine-system combination.

(2) Engine identification.

(3) Instrument operator(s).

(4) Engine operator(s).

(5) Number of hours of operation accumulated on the engine prior to beginning the test sequence (Figure N84–10).

(6) Identification and specifications of test fuel used.

(7) Date of most recent analytical assembly calibration.

(8) All pertinent instrument information such as tuning, gain, serial numbers, detector number, calibration curve number, etc. As long as this information is traceable, it may be summarized by system or analyzer identification numbers.

(e) *Test data.* The physical parameters necessary to compute the test results and ensure accuracy of the results shall be recorded for each test conducted for compliance with the provisions of subpart A of this part. Additional test data may be recorded at the discretion of the manufacturer. Extreme details of the test measurements such as analyzer chart deflections will generally not be required on a routine basis to be reported to the Administrator for each test, unless a dispute about the accuracy of the data arises. The following types of data shall be required to be reported to the Administrator. The Application Format for Certification for the applicable model year will specify the exact requirements which may change slightly from year to year with the addition or deletion of certain items.

(1) Date and time of day.

(2) Test number.

(3) Engine intake air or test cell temperature.

(4) Barometric pressure. (A central laboratory barometer may be used: *Provided,* that individual test cell barometric pressures are shown to be within ±0.1 percent of the barometric pressure at the central barometer location.)

(5) Engine intake or test cell and CVS dilution air humidity.

(6) Maximum torque versus speed curve as determined in § 86.1332, with minimum and maximum engine speeds, and a description of the mapping technique used.

(7) Measured maximum horsepower and maximum torque speeds.

(8) Measured maximum horsepower and torque.

(9) Measured high idle engine speed (governed diesel engines only).

(10) Measured fuel consumption at maximum power and torque (diesel engines only).

(11) Cold-soak time interval and cool down procedures.

(12) Temperature set point of the heated continuous analysis system components (if applicable).

(13) Test cycle validation statistics as specified in § 86.1341 for each test phase (cold and hot).

(14) Total CVS flow rate with dilution factor for each test phase (cold and hot).

(15) Temperature of the dilute exhaust mixture and secondary dilution air (in the case of a double dilution system) at the inlet to the respective gas meter(s) or flow instrumentation used for particulate sampling.

(16) The maximum temperature of the dilute exhaust mixture immediately ahead of the particulate filter.

(17) Sample concentrations (background corrected) for HC, CO, CO_2 and NO_X for each test phase (cold and hot).

(18) For engines requiring methanol and/or formaldehyde measurement (as applicable):

(i) Volume of sample passed through the methanol sampling system and the volume of deionized water in each impinger.

(ii) The methanol concentration of the GC analyses of the test samples, μ g/ml.

(iii) Volume of sample passed through the formaldehyde sampling system.

(iv) The formaldehyde concentration of the LC analysis of the test sample, μ g/ml.

(v) Specification of the methanol test fuel, or fuel mixtures, used during testing.

(vi) A continuous measurement of the dew point of the raw and diluted exhaust. This requirement may be omitted if the temperatures of all heated lines are kept above 220 °F, or if the manufacturer performs an engineering analysis demonstrating that the temperature of the heated systems remains above the maximum dew point of the gas stream throughout the course of the test.

(19) For natural gas-fueled engines: Composition, including all carbon containing compounds; *e.g.*, CO_2, of the natural gas-fuel used during the test.

C_1 and C_2 compounds shall be individually reported. C_3 and heavier compounds, and C_6 and heavier compounds may be reported as a group.

(20) For liquefied petroleum gas-fueled engines: Composition of the liquefied petroleum gas-fuel used during the test. Each hydrocarbon compound present, through C_4 compounds, shall be individually reported. C_5 and heavier hydrocarbons may be reported as a group.

(21) The stabilized pre-test weight and post-test weight of each particulate sample and back-up filter or pair of filters.

(22) Brake specific emissions (g/BHP–hr) for HC, CO, NO_X, and, if applicable NMHC, NMHCE, THCE, CH_3OH, and HCHO for each test phase (cold and hot).

(23) The weighted (cold and hot) brake specific emissions (g/BHP-hr) for the total test.

(24) The weighted (cold and hot) carbon balance or mass-measured brake specific fuel consumption for the total test.

(25) The number of hours of operation accumulated on the engine after completing the test sequences described in Figure N84–10.

[59 FR 48535, Sept. 21, 1994, as amended at 60 FR 34376, June 30, 1995; 62 FR 54730, Oct. 21, 1997]

Subpart O—Emission Regulations for New Gasoline-Fueled Otto-Cycle Light-Duty Vehicles and New Gasoline-Fueled Otto-Cycle Light-Duty Trucks; Certification Short Test Procedures

SOURCE: 58 FR 58426, Nov. 1, 1993, unless otherwise noted.

§86.1401 Scope; applicability.

This subpart contains CST procedures for gasoline-fueled Otto-cycle light-duty vehicles, and for gasoline-fueled Otto-cycle light-duty trucks, including those certified to operate using both gasoline and another fuel (for example, ''flexible-fuel'' or ''dual-fuel'' light-duty vehicles and light-duty trucks). For the purposes of the Certification Short Test, flexible-fuel or dual-fuel vehicles will be treated as dedicated gasoline vehicles. This subpart applies to 1996 and later model years.

§86.1402 Definitions.

The definitions in §86.096–2 apply to this subpart.

§86.1403 Abbreviations.

The abbreviations in §86.096–3 apply to this subpart.

§86.1404 [Reserved]

§86.1405 Introduction; structure of subpart.

(a) This subpart describes equipment and the procedures required to perform the CST on gasoline-fueled Otto-cycle light-duty vehicles and gasoline-fueled Otto-cycle light-duty trucks (including those certified to operate using both gasoline and another fuel). Subpart A of this part sets forth the testing requirements, reporting requirements and test intervals necessary to comply with EPA certification procedures, subpart G of this part sets forth the requirements for Selective Enforcement Auditing of light-duty vehicles, subpart H of this part sets forth the standards for in-use testing, subpart K of this part sets forth the requirements for Selective Enforcement Auditing of light-duty trucks, and part 85, subpart W of this chapter sets forth the testing requirements for inspection and maintenance testing (which also may be utilized as part of the CST as defined in this subpart).

(b) Three topics are addressed in this subpart. Sections 86.1406 through 86.1413 set forth specifications and equipment requirements; §§86.1416 through 86.1426 discuss calibration methods and frequency; and test procedures and data requirements are described in §§86.1427 through 86.1442.

§86.1406 Equipment required and specifications; overview.

(a) *Exhaust emission tests.* All vehicles subject to this subpart are tested for exhaust emissions.

(1) *Dynamometer.* (i) When a CST employs steady state loaded operation, the dynamometer must be adjusted to

the lowest available inertia weight setting and must meet the load speed relationships described in § 86.1439(d). When a CST employs transient loaded warmup operation or loaded preconditioning, the dynamometer must be adjusted to the power absorption unit and inertia weight settings as described in § 86.129 of this part.

(ii) All other requirements of this paragraph are set forth in §§ 85.2230 and 85.2233 of this chapter.

(2) *Exhaust gas analysis system.* (i) The requirements for the exhaust gas analysis system are set forth in §§ 85.2225 and 85.2233 of this chapter, except that the NO channel is optional. For the purposes of the CST, non-dispersive infrared analyzers are specified for measuring emissions.

(ii) If desired, the line extending between the sample probe and the analyzer may be insulated to minimize condensation.

(b) *Fuel and analytical tests.* Fuel requirements for the CST are specified in §§ 86.113, 86.213, and 86.1413.

[58 FR 58426, Nov. 1, 1993; 59 FR 33913, July 1, 1994]

§§ 86.1407–86.1412 [Reserved]

§ 86.1413 Fuel specifications.

(a) The test fuel to be used for the CST test options described in tables O–96–1 and O–96–2 of § 86.1430(b) must conform to the specifications listed in paragraph (b) of this section except that for manufacturer data submittal testing for the purposes of obtaining a certificate of conformity and for Selective Enforcement Audit testing, the octane specification of the fuels does not apply. For all gasoline-fueled Otto-cycle light-duty vehicles and gasoline-fueled Otto-cycle light-duty trucks (including those certified to operate using both gasoline fuel and another fuel), CST procedures performed for the purpose of obtaining a certificate of conformity must be conducted using the appropriate gasoline fuel only, as indicated in paragraph (b) of this section.

(b) *CST test fuels by option.* (1) Test Option 1: Use Cold CO fuel as specified in the table in § 86.213–94.

(2) Test Option 2: Use Cold CO fuel, as specified in the table in § 86.213–94; optionally, the Administrator may substitute Otto-cycle test fuel, as described in § 86.113–94(a)(1).

(3) Test Option 3: Use Otto-cycle test fuel as specified in the table in § 86.113–94(a)(1).

§§ 86.1414–86.1415 [Reserved]

§ 86.1416 Calibration; frequency and overview.

(a) Calibrations are performed as specified in § 85.2233 of this chapter, with the exception that the calibrations performed at 72 hour intervals in § 85.2233(e) of this chapter are instead performed prior to each CST.

(b) At least monthly, or after any maintenance which could alter calibration, the calibration of the analyzer must be checked. The analyzer must be adjusted or repaired as necessary.

(c) Water traps, filters, and conditioning columns must be checked before each test, and adjusted, repaired or replaced as necessary.

(d) Other equipment used for testing must be calibrated as often as necessary in accordance with good engineering practice.

§§ 86.1417–86.1421 [Reserved]

§ 86.1422 Analyzer calibration.

(a) Determine that the analyzer has met the acceptance criteria specified in § 85.2225 of this chapter.

(b) *Initial and periodic check.* Prior to its introduction into service and at specified periods thereafter, the analyzer must receive calibration in accordance with § 85.2233 of this chapter and with good engineering practice.

§§ 86.1423–86.1426 [Reserved]

§ 86.1427 Certification Short Test procedure; overview.

(a) The test procedure described in this subpart is designed to measure raw concentrations of CO (percent) and HC (parts per million) in the exhaust flow under conditions and test modes that may be encountered in the conduct of the Emission Control System Performance Warranty Short Tests, described in part 85, subpart W of this chapter. Emission sampling may occur during idle, 2500 rpm, and loaded modes. Specific conditions defined by this test procedure include fuel characteristics,

ambient temperature, and waiting periods prior to being tested.

(b) *Testing by the manufacturer for certification data submittal.* (1) The options provided for testing under this subpart include a cold temperature test with Cold CO fuel, a moderate temperature test with Cold CO fuel, and a warm temperature test with FTP Otto-cycle test fuel, as described in table O–96–1 of §86.1430. The manufacturer must complete testing for the data submittal (as required by the provisions of §86.096–23(c)) under a minimum of one of these scenarios.

(2) In addition to testing under one of the sets of conditions specified in this subpart, the manufacturer may optionally test under conditions outside the ranges specified in this subpart.

(c) *Testing by the Administrator.* The Administrator reserves the right to conduct testing in accordance with the test procedures described in §86.1439, under test conditions within the ranges specified in this subpart. The options provided for testing under this subpart include a cold temperature test with Cold CO fuel, a moderate temperature test with Cold CO fuel, a moderate temperature test with Otto-cycle test fuel, and a warm temperature test with Otto-cycle test fuel, as described in table O–96–2 of §86.1430. In order for an engine family to be eligible for certification, each of its test vehicles that is subjected to one or more CSTs must obtain a passing result for each combination of fuel, temperature, and test procedure employed in those CSTs, subject to the Administrator's discretion.

(d) *Alternative test procedures and exemptions.* (1) The manufacturer may request an exemption from any specific test(s) described in §86.1439 for any engine family for which the specific test(s) is not appropriate. The requester will supply relevant test data and technical support to substantiate the request for an Administrator-granted exemption.

(2) The manufacturer may request alternative test procedures for any engine family for which none of the test procedures described in §86.1439 is appropriate. The alternative test procedure(s) must be approved in advance by the Administrator in accordance with the provisions of §85.2208 of this chapter.

(3) If the manufacturer does not submit a written application for use of alternative test procedures or for exemptions from specific test procedures described in §86.1439 but the Administrator determines that an engine family is not susceptible to satisfactory testing by the procedures set forth in this part, the Administrator shall notify the manufacturer in writing and set forth the reasons for such rejection in accordance with the provisions of §86.090–22(c).

(4) The emission control information label for any vehicle for which approval of exemptions or alternative test procedure(s) has been granted must note such approval, in accordance with §86.096–35, in order for the exemptions or alternative procedures to be effective for that vehicle.

§§86.1428–86.1429 [Reserved]

§86.1430 Certification Short Test sequence; general requirements.

(a) The following sequence lists the major steps encountered during the CST. These steps are described in paragraph (b) of this section and in §§86.1432, 86.1437, 86.1438, and 86.1439. Testing conducted for the manufacturer's data submittal must be in accordance with the provisions of §§86.096–23 and 86.1442.

(1) *Test conditions and procedures.* (i) *Manufacturer's data submittal.* Test conditions must be selected from table O–96–1 of paragraph (b) of this section. Further, the vehicle preparation and test run must be those described in §§86.1432 and 86.1437. Figure O96–1 shows the steps encountered as the test vehicle undergoes the procedures subsequently described.

FIGURE O96-1
MANUFACTURER CST DATA SUBMITTAL REQUIREMENTS

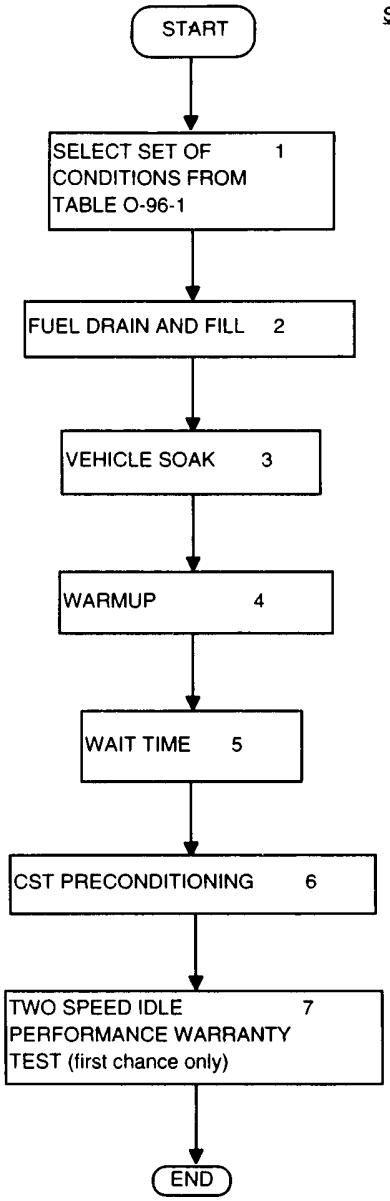

STEP #	NOTE
1	• fuel type • ambient temperature
2	• If cold ambient temp. is selected in Step 1, a manufacturer may elect to run a Cold CO test procedure in lieu of Steps 2, 3 & 4
3	• 0-36 hour soak
4	• partial UDDS (505 secs.) • Warmup not performed if Cold CO test procedure is followed by no soak
5	• 25-30 minute idle • 0-6 engine off/restart cycles
6	• 25-30 seconds at either 2500±300 rpm OR 30-50 mph • Vehicle must attain allowable rpm or mph range in ≤ 10 seconds
7	• Standards: certification 100 ppm HC 0.5% CO SEA 100 ppm HC 0.5% CO recall 220 ppm HC 1.2% CO

(ii) *Testing by the Administrator.* Test conditions are selected from among the set of conditions in table O–96–2 of paragraph (b) of this section. Further, one or more CST(s) are performed in accordance with the provisions of §§ 86.1432, 86.1438, and 86.1439. Figure O96–2 shows the steps encountered as the test vehicle undergoes the procedures subsequently described.

FIGURE O96-2
EPA CST COMPLIANCE TESTING REQUIREMENTS

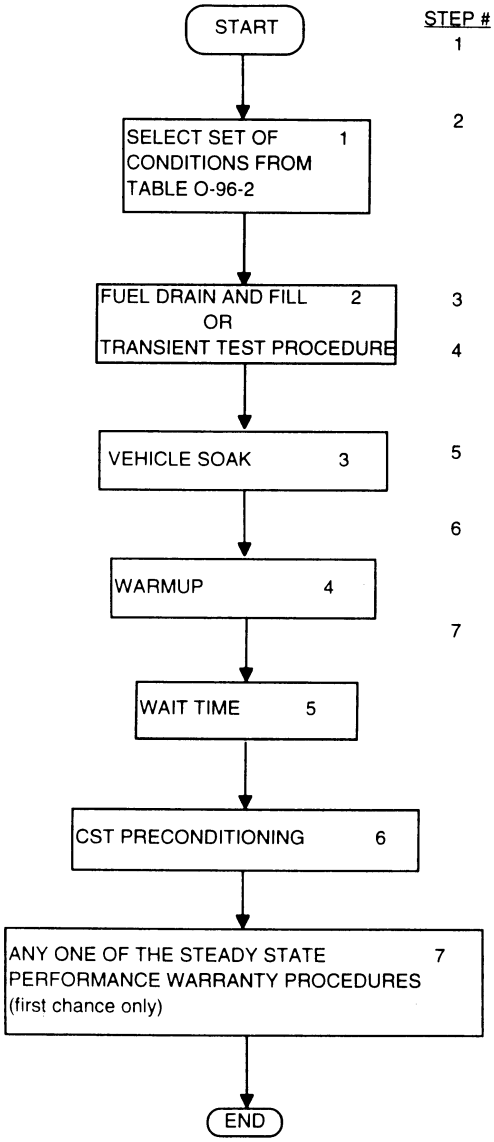

STEP #	NOTE
1	• fuel type • ambient temperature
2	• Transient test procedure may be: Cold CO test procedure, or Federal Test Procedure (excluding evaporative emissions testing) and/or Highway Fuel Economy Test Procedure
3	• 0-36 hour soak
4	• Partial UDDS (≥505 secs.). • Warmup not performed if transient is followed by no soak
5	• 3-30 minute idle • 0-6 engine off/restart cycles
6	• Minimum of 30 seconds at either 2500±300 rpm OR 30-50 mph
7	• Standards: certification 100 ppm HC 0.5% CO SEA 100 ppm HC 0.5% CO recall 220 ppm HC 1.2% CO

(2) *Fuel tank drain and refill, or transient test procedure.* Fuel tank drain and fill is performed or a transient test procedure is performed, as described in § 86.1432(b).

(3) *Soak.* A soak lasting up to 36 hours in duration may optionally be performed as specified in § 86.1432(c).

(4) *Warmup operation*—(i) *Manufacturer's data submittal.* The test vehicle may optionally be administered the first 505 seconds of the Urban Dynamometer Driving Schedule (UDDS), as described in § 86.1432(d)(1). If the test vehicle was subjected to a Cold CO Test Procedure in lieu of the steps listed in paragraphs (a) (2) through (4) of this section, it will not receive a warmup.

(ii) *Testing by the Administrator.* (A) If the test vehicle has not been subjected to a transient loaded test procedure as permitted in § 86.1432(b)(2) prior to the wait time, or if the vehicle has undergone a soak period exceeding 60 seconds, the test vehicle must be administered, at minimum, the first 505 seconds of the UDDS, as described in § 86.1432(d)(2).

(B) If the test vehicle is exposed to ambient temperatures outside of the specified temperature range between an initial test and a retest, it will receive a full UDDS, as described in § 86.1438.

(5) *Wait time*—(i) *Manufacturer's data submittal.* A 25 to 30 minute vehicle wait time of free idle, with optional engine off/restart cycles, must be performed as specified in § 86.1437(b).

(ii) *Testing by the Administrator.* A three to 30 minute vehicle wait time of free idle with optional engine off/restart cycles must be performed as specified in § 86.1438(b).

(6) *Preconditioning*—(i) *Manufacturer's data submittal.* Optional preconditioning consisting of 2500 rpm (±300 rpm) idle operation or loaded operation at 30 mph to 50 mph (48 kph to 80 kph) may be performed for 25 to 30 seconds as specified in § 86.1437(c).

(ii) *Testing by the Administrator.* Preconditioning consisting of 2500 rpm (±300 rpm) idle operation or loaded operation at 30 mph to 50 mph (48 kph to 80 kph) must be performed for a minimum of 30 seconds as specified in § 86.1438(c).

(7) *Test procedure*—(i) *Manufacturer's data submittal.* The test procedure consists of the Two Speed Idle Test (first chance only), which is performed as specified in § 86.1437 (e) through (g).

(ii) *Testing by the Administrator.* The Administrator will perform one or more test procedures described in § 86.1439. For recall program testing, in-use vehicles will be set to the manufacturer's specifications, if appropriate.

(b) The sets of test conditions identified in this subpart are based on the test fuel type present in the vehicle fuel tank and the ambient temperature during the test. Tables O–96–1 and O–96–2 outline the specific ranges of conditions to be employed in the CST. The manufacturer must perform the CST described in this subpart under at least one of the three sets of conditions shown in table O–96–1 for data submittal under the provisions of § 86.096–23. The set of conditions selected is the one that, in the manufacturer's best judgment, represents the worst case, meaning the highest probability that the test vehicle would fail.

Table O—96–1—Sets of Conditions To Be Employed for Manufacturer's Data Submittal in the CST

	Test Option 1	Test Option 2	Test Option 3
	Cold Temperature	Moderate Temperature	Warm Temperature
Fuel Type	Cold CO fuel (see table in § 86.213–94).	Cold CO fuel (see table in § 86.213–94).	Otto-cycle test fuel (see table in § 86.113–94(a)(1))
Ambient temperature	15 °F—25 °F (−9 °C—−4 °C)	68 °F—86 °F (20 °C—30 °C) ...	86 °F—96 °F (30 °C—36 °C)

Table O—96–2—Sets of Conditions To Be Employed by the Administrator in the CST

	Test Option 1	Test Option 2	Test Option 3
	Cold Temperature	Moderate Temperature	Warm Temperature
Fuel Type	Cold CO fuel (see table in § 86.213–94).	Otto-cycle test fuel or Cold CO fuel (see table in § 86.113–94(a)(1) or in § 86.213–94).	Otto-cycle test fuel (see table in § 86.113–94)

Table O—96–2—Sets of Conditions To Be Employed by the Administrator in the CST—Continued

	Test Option 1	Test Option 2	Test Option 3
	Cold Temperature	Moderate Temperature	Warm Temperature
Ambient temperature	15 °F—25 °F (−9 °C—−4 °C)	68 °F—86 °F (20 °C—30 °C) ...	86 °F—96 °F (30 °C—36 °C)

(c) For testing conducted in accordance with this subpart, the ambient temperature to which the test vehicle is exposed must not fall outside the range specified in this paragraph.

(1) *For the cold temperature compliance pathways*—(i) *For the manufacturer's data submittal.* The ambient temperature for the steps following the fuel drain and fill or transient test procedure must remain between 15 °F and 25 °F (between −9 °C and −4 °C).

(ii) *For testing by the Administrator.* The ambient temperature for the remainder of the compliance pathway beginning with the step following the fuel drain and fill must remain between 15 °F and 68 °F (between −9 °C and 20 °C). In addition, from the warmup operation step (if performed) or the wait time step forward through the remainder of the CST, the ambient temperature must be maintained within ± 5 °F (3 °C) of the selected ambient temperature of the CST.

(2) *For the moderate and warm temperature compliance pathways*—(i) *For the manufacturer's data submittal.* The ambient temperature for the steps preceding the warmup operation (if performed) or the wait time (if no warmup is performed) must remain within the specific ambient temperature range selected for the CST, that is, either moderate or warm, as specified in table O–96–1.

(ii) *For testing by the Administrator.* The ambient temperature for the steps preceding the warmup operation (if performed) or the wait time (if no warmup is performed) must remain between 68 °F and 96 °F (between 20 °C and 36 °C), except as provided in paragraph (c)(3) of this section.

(iii) The warmup operation (if performed) and the entire test run from the wait time forward, as described in § 86.1437 or § 86.1438, must remain within the specific ambient temperature range selected for the CST, that is, either moderate or warm, as specified in tables O–96–1 and O–96–2.

(3) *For testing by the Administrator only.* If Cold CO fuel is selected in conjunction with the moderate temperature compliance pathway, the specific provisions described in paragraphs (c)(3) (i) and (ii) of this section apply.

(i) The ambient temperature must be maintained within the moderate temperature range, as specified in table O–96–2, from the drain and fuel step forward throughout the remainder of the compliance pathway.

(ii) The ambient temperature of the test cell may not exceed 80 °F (27 °C) for the warmup operation (if performed) nor for the entire test run from the wait time forward, as described in §§ 86.1438 and 86.1439.

(d) If the engine stalls at any time during the test run, the CST is void unless the stall falls during the wait time within the guidelines for engine off time described in § 86.1437 (b) and (d) and § 86.1438(d)(1)(i).

[58 FR 58426, Nov. 1, 1993; 59 FR 33913, July 1, 1994]

§ 86.1431 [Reserved]

§ 86.1432 Vehicle preparation.

(a) The test conditions to be employed in the CST procedure must be selected from the applicable options specified in table O–96–1 or table O–96–2 of § 86.1430(b). The fuel tank must be fitted, as required, to accommodate a fuel drain at the lowest point possible in the tank(s) as installed on the vehicle.

(b) *Fuel tank drain and fill, or transient test procedure*—(1) *CST performed as a stand-alone procedure.* For the first CST compliance pathway performed as a stand-alone procedure on a particular test vehicle, the fuel tank(s) must be filled to approximately the prescribed ''tank fuel volume'' (as defined in § 86.082–2) with the specified test fuel.

For the cold temperature compliance pathway, the temperature of the fuel prior to its delivery to the fuel tank must be less than or equal to 60 °F (16 °C). If the existing fuel in the fuel tank(s) does not meet the specifications contained in § 86.1413 and § 86.1430(b), the existing fuel must be drained prior to the fuel fill as specified above. Other refueling during a CST may not be performed. Draining and refueling between successive CSTs is allowed and is required prior to any CST for which the specified fuel is different than that existing in the tank(s). Any soak or operation that follows this step, until the conclusion of the CST sequence, must occur at an ambient temperature that is within the allowable temperature range described in § 86.1430(c).

(2) *CST performed in sequence with other confirmatory testing.* Certain complete confirmatory test procedures, as indicated in paragraphs (b)(2) (i) and (ii) of this section, may be substituted for the vehicle preparation steps described in paragraph (b)(1), (c), and (d) of this section. If the vehicle is to be subjected to one or more of these other confirmatory test procedures, the vehicle is prepared in accordance with the applicable complete procedures from the point of fuel drain and fill.

(i) *Manufacturer's data submittal.* The only test procedure that the manufacturer may select to substitute for paragraphs (b)(1), (c)(1), and (d)(1) of this section for the purposes of its data submittal is the Cold CO Test Procedure, performed in accordance with subpart C of this part.

(ii) *Testing by the Administrator.* The complete confirmatory test sequences that the Administrator may select to substitute for paragraph (b)(1) of this section are listed in paragraphs (b)(2)(ii) (A) through (C) of this section.

(A) Federal Test Procedure for exhaust emissions (except when performing evaporative test sequence) or for fuel economy testing, in accordance with subpart B of this part.

(B) Highway Fuel Economy Test Procedure, in accordance with part 600 of this chapter (which must follow a Federal Test Procedure).

(C) Cold CO Test Procedure, in accordance with subpart C of this part.

(c) *Soak*—(1) *Manufacturer's data submittal.* A vehicle soak prior to the wait time is optional if the CST sequence is performed as a stand-alone procedure. If the manufacturer elects to perform a Cold CO Test Procedure in conjunction with the CST as permitted in paragraph (b)(2) of this section, the soak and subsequent warmup are not conducted, and instead the procedure must move directly to the wait time step described in § 86.1437(b). If the test vehicle undergoes a soak period, it must be maintained at an ambient temperature within the temperature range specified in § 86.1430(c), for a period not to exceed 36 hours in duration, except as provided in paragraph (d)(1) of this section. Ambient temperature during soak periods must remain within the appropriate temperature range for the selected test option.

(2) *Testing by the Administrator.* (i) The test sequence may proceed directly to the wait time step described in § 86.1438(b) within 60 seconds of the end of vehicle operation conducted in accordance with paragraph (b)(2) of this section.

(ii) Optionally, the test vehicle may soak at an ambient temperature within the temperature range specified in § 86.1430(c), for a period up to 36 hours in duration, except as provided in paragraph (d)(2) of this section. If the Administrator opts to soak the test vehicle, warmup operation must be performed as described in paragraph (d)(2) of this section.

(d) *Warmup operation*—(1) *Manufacturer's data submittal.* Warmup operation is optional. Warmup consists of loaded operation over the first 505 seconds of the UDDS (in accordance with § 86.115 and appendix I to this part), or optionally, if the soak period has exceeded 36 hours, a full UDDS. Warmup operation must occur within the specific ambient temperature range for the selected test option, as given in table O–96–1 of § 86.1430.

(2) *Testing by the Administrator.* Warmup operation is performed if no transient operation of the type specified in § 86.1432(b)(2) is performed prior to the wait time, or if the optional soak exceeds 60 seconds. Warmup operation consists of, at a minimum, loaded operation over the first 505 seconds of

the UDDS (in accordance with § 86.115 and appendix I to this part), or, if the soak period has exceeded 36 hours, a full UDDS. Warmup operation must occur within the specific ambient temperature range for the selected test option, as given in table O–96–2 of § 86.1430, except as specified in paragraphs (e)(2)(i) and (ii) of this section. Warmup operation must proceed immediately to the wait time step at § 86.1438(b).

(i) For moderate temperature testing utilizing Cold CO fuel only, the ambient temperature may not exceed 80 °F (27 °C) during warmup operation, or any of the succeeding steps in the CST sequence.

(ii) For the cold temperature pathway only, warmup operation must occur not only within the specific ambient temperature range indicated in table O–96–2 of § 86.1430, but must also occur within 5 °F (3 °C) of the selected test temperature.

§ 86.1433 [Reserved]

§ 86.1434 Equipment preparation.

(a) Immediately prior to the wait time portion of the test run described in § 86.1437 or § 86.1438, or immediately prior to warmup operation, the steps described in paragraphs (b) through (d) of this section must be performed.

(b) Check the device(s) for removing water from the exhaust sample and the sample filter(s). Remove any water from the water trap(s). Clean and replace the filter(s) as necessary.

(c) Set the zero and span points of the analyzer with the electrical spanning network or with analytical gases.

(d) Attach the tachometer to the vehicle in accordance with the analyzer manufacturer's instructions. The manufacturer must ensure, for all test and production vehicles and engines, that the rpm signal is capable of being read by an exhaust gas analyzer via:

(1) A conventional inductive tachometer; or

(2) The onboard diagnostics (OBD) connector, as described under the provisions of § 86.094–17; or

(3) A dedicated electrical lead, marked ''rpm'' and located under the hood, with a female-type, quarter-inch spade terminal. The digital transistor-transistor logic (TTL) signal must span the 0V–5V range at a rate of one pulse per engine revolution, synchronized to the top dead center position.

§§ 86.1435–86.1436 [Reserved]

§ 86.1437 Test run—manufacturer.

(a) This section describes the test run performed by the manufacturer for its data submittal pursuant to obtaining a certificate of conformity under the provisions of § 86.096–23. The test run consists of the wait time, vehicle preconditioning (optional), and the selected test procedure. The entire test run is performed in accordance with the conditions in the option selected from table O–96–1 of § 86.1430.

(b) *Wait time.* (1) If the vehicle is not already idling, the vehicle is started and allowed to idle freely with the transmission in neutral. The vehicle wait time begins when the vehicle engine speed is between 350 and 1100 rpm. The engine speed must attain the specified idle speed within ten seconds of beginning the idle period. A timer for the wait time portion of the test run will initiate (wt=0) when the vehicle is turned on or when it returns to idle after any transient test procedure, as described in § 86.1432.

(2) Following the first three minutes of idle, this wait time may be interrupted by engine off/restart cycles occurring no more frequently than every five minutes, with each engine off period having a maximum duration of two minutes. Each period of idle following a restart must be a minimum of three minutes in duration. During each idle period, the engine speed must not exceed 1100 rpm or fall below 350 rpm for more than five seconds in any one excursion. The total duration of the wait time, including time at idle and time during engine off periods, is 25 to 30 minutes.

(c) *Optional preconditioning.* Immediately following the wait time, the engine speed is increased to 2500± 300 rpm for 25 to 30 seconds or, optionally, the vehicle will undergo loaded operation for a minimum of 30 seconds between the speeds of 30 and 50 mph (48 to 80 kph). The period allowed for preconditioning commences upon attaining the specified rpm or speed range.

No more than ten seconds may elapse between terminating the wait time and attaining the specified rpm or speed range for preconditioning.

(d) Immediately following the wait time, described in paragraph (b) of this section, or, if performed, the optional preconditioning described in paragraph (c), the test procedure as described in paragraphs (e) through (g) of this section is performed on the test vehicle. The general requirements described in paragraphs (d) (1) through (4) of this section apply.

(1) *Exhaust gas sampling algorithm.* The analysis of exhaust gas concentrations begins ten seconds after the applicable test mode begins. Exhaust gas concentrations must be analyzed at a minimum rate of once every 0.75 second. The measured value for pass/fail determinations is a simple running average of the measurements taken over five seconds.

(2) *Void test conditions.* The test immediately terminates and any exhaust gas measurements are voided if the measured concentration of CO plus CO_2 falls below six percent or the vehicle's engine stalls at any time during the test sequence.

(3) *Multiple exhaust pipes.* Exhaust gas concentrations from vehicle engines equipped with multiple exhaust pipes must be sampled simultaneously.

(4) *Pass/fail determination.* A pass or fail determination is made for each applicable test mode based on a comparison of the short test standards contained in § 86.096–8(a) for light-duty vehicles and in § 86.096–9(a) for light-duty trucks, and the measured value for HC and CO as described in paragraph (d)(1) of this section. A vehicle passes the test mode if any pair of simultaneous values for HC and CO are below or equal to the applicable short test standards.

(e) *Test sequence—general requirements.* (1) The test sequence consists of an idle mode followed by a high-speed mode. The test timer starts when the conditions specified in this paragraph are met. The overall maximum test time is 290 seconds (tt=290). The test terminates immediately upon reaching the overall maximum test time. A vehicle that has not yielded passing results by the expiration of the overall test time fails the test.

(2) The test sequence begins only after the requirements described in paragraphs (e)(2) (i) and (ii) of this section are met. If these conditions are not met within one minute upon completion of the wait time or, if performed, the preconditioning, the CST must be aborted.

(i) The vehicle is tested with the transmission in neutral or park and all accessories turned off. The engine must be at normal operating temperature (as indicated by a temperature gauge, temperature lamp, touch test on the radiator hose, or other visual observation indicating that overheating has not occurred).

(ii) The tachometer must be attached to the vehicle in accordance with the analyzer manufacturer's instructions.

(iii) The sample probe is inserted into the tailpipe to a minimum depth of 10 inches. If the vehicle's exhaust system prevents insertion to this depth, a tailpipe extension must be used, or the probe may be inserted into the tailpipe to CVS connector through an aperture provided for this purpose.

(iv) The measured concentration of CO plus CO_2 must be greater than or equal to six percent.

(f) *Idle mode.* (1) The mode timer starts (mt=0) when the vehicle engine speed is between 350 and 1100 rpm. If engine speed exceeds 1100 rpm or falls below 350 rpm, the mode timer resets to zero and resumes timing. The minimum mode time is 30 seconds. The maximum idle mode length is 90 seconds elapsed time (mt=90).

(2) The pass/fail analysis begins after an elapsed time of ten seconds (mt=10). A pass or fail determination is made for the vehicle and the mode terminated as described in paragraphs (f)(2) (i) through (iii) of this section.

(i) The vehicle passes the idle mode and the mode is terminated at the end of an elapsed time of 30 seconds (mt=30) if the measured values are less than or equal to the applicable short test standards as described in paragraph (d)(4) of this section.

(ii) The vehicle passes the idle mode and the mode is immediately terminated if, at any point between an elapsed time of 30 seconds (mt=30) and

90 seconds (mt=90), the measured values are less than or equal to the applicable short test standards as described in paragraph (d)(4) of this section.

(iii) The vehicle fails the idle mode and the test is terminated if none of the provisions of paragraphs (f)(2) (i) and (ii) of this section is met by an elapsed time of 90 seconds (mt=90).

(g) *High-speed mode.* This mode follows immediately upon termination of the idle mode.

(1) The mode timer resets (mt=0) when the vehicle engine speed is between 2200 and 2800 rpm. If engine speed falls below 2200 rpm or exceeds 2800 rpm for more than two seconds in one excursion, or more than six seconds over all excursions within 30 seconds of the final measured value used in pass/fail determination, the measured value is invalidated and the mode continued. If any excursion lasts for more than ten seconds, the mode timer resets to zero (mt=0) and timing resumes. The minimum high-speed mode length is determined as described in paragraph (g)(2) of this section. The maximum high-speed mode length is 90 seconds elapsed time (mt=90).

(2) The pass/fail analysis begins after an elapsed time of ten seconds (mt=10). A pass or fail determination is made for the vehicle and the mode terminated as described in paragraphs (g)(2)(i) through (iii) of this section.

(i) The vehicle passes the high-speed mode and the mode is terminated at the end of an elapsed time of 30 seconds (mt=30) if the measured values are less than or equal to the applicable short test standards as described in paragraph (d)(4) of this section.

(ii) The vehicle passes the high-speed mode and the mode is immediately terminated if, at any point between an elapsed time of 30 seconds (mt=30) and 90 seconds (mt=90), the measured values are less than or equal to the applicable short test standards as described in paragraph (d)(4) of this section.

(iii) The vehicle fails the high-speed mode and the test is terminated if none of the provisions of paragraphs (g)(2) (i) and (ii) of this section is met by an elapsed time of 90 seconds (mt=90).

[58 FR 58426, Nov. 1, 1993; 59 FR 33913, July 1, 1994]

§ 86.1438 Test run—EPA.

(a) This section describes the test run performed by the Administrator for confirmatory testing pursuant to issuing a certificate of conformity under the provisions of § 86.091–29. The Administrator may also employ this procedure for Selective Enforcement Audit and recall purposes. For recall program testing, in-use vehicles will be set to manufacturer's specifications prior to conduct of the CST. The test run consists of the wait time, vehicle preconditioning, and the selected test procedure. The test run is performed in accordance with the conditions in the option selected from table O–96–2 of § 86.1430. If the CST is performed in conjunction with other confirmatory testing in accordance with § 86.1432(b)(2) and (c)(2), the vehicle must undergo the CST at the same specified ambient temperature range as that of the other confirmatory testing performed immediately prior to the optional vehicle soak, except as specified in paragraphs (a) (1) and (2) of this section.

(1) If the transient confirmatory testing was performed at the moderate temperature range specified in § 86.1430 and utilized Otto-cycle test fuel, it may optionally be followed by a CST sequence as described in § 86.1432 (b) and (c) at the warm ambient temperature range.

(2) If the transient confirmatory testing was performed at the moderate temperature range specified in § 86.1430 and utilized Cold CO test fuel, it may optionally be followed by a CST sequence as described in § 86.1432 (b) and (c) at the moderate ambient temperature range, except that if the ambient temperature exceeds 80 °F (27 °C) at any point for the remainder of the sequence from the wait time forward, a non-passing test result renders the test void.

(b) *Wait time.* (1) If the vehicle is not already idling, the vehicle is started and allowed to idle freely with the transmission in neutral. The vehicle wait time begins when the vehicle engine speed is between 350 and 1100 rpm. The specified idle speed range must be attained within ten seconds of beginning the idle operation. A timer for the wait time portion of the test run will initiate (wt=0) when it returns to idle

after any transient operation that occurs immediately prior to the wait time, as described in § 86.1432, or when the vehicle is restarted after being shut off prior to the wait time.

(2) Following the first three minutes of idle, this wait time may be interrupted by vehicle engine off/restart cycles occurring no more frequently than every five minutes, with each engine off period having a maximum duration of two minutes. Each period of idle following a restart must be a minimum of three minutes in duration. During each idle period, the engine speed must not exceed 1100 rpm or fall below 350 rpm for more than five seconds in any one excursion, except during the allowable engine-off periods. The total duration of the wait time, including time at idle and time during engine off periods, is three to 30 minutes.

(c) *Preconditioning.* Immediately following the wait time, the vehicle is preconditioned by increasing engine speed to 2500 ±300 rpm for a minimum of 30 seconds, or, optionally, the vehicle will undergo loaded operation for a minimum of 30 seconds between the speeds of 30 and 50 mph (48 to 80 kph).

(d) Immediately following the preconditioning described in paragraph (c) of this section, the test procedure as described in paragraphs (e) through (g) of this section is performed on the test vehicle. When the CST—Loaded Test as described in § 86.1439(d) is selected, the appropriate changes to dynamometer power absorption and inertia weight settings must be completed and the test sequence resumed as soon as possible following completion of preconditioning. The general requirements described in paragraphs (d) (1) through (4) of this section apply.

(1) *Exhaust gas sampling algorithm.* The analysis of exhaust gas concentrations begins ten seconds after the applicable test mode begins. Exhaust gas concentrations must be analyzed at a minimum rate of once every 0.75 second. The measured value for pass/fail determinations is a simple running average of the measurements taken over five seconds.

(2) *Void test conditions.* The test immediately terminates and any exhaust gas measurements are voided if the measured concentration of CO plus CO_2 falls below six percent or the vehicle's engine stalls at any time during the test sequence.

(3) *Multiple exhaust pipes.* Exhaust gas concentrations from vehicle engines equipped with multiple exhaust pipes must be sampled simultaneously.

(4) *Pass/fail determination.* For certification and Selective Enforcement Audit testing, a pass or fail determination is made for each applicable test mode based on a comparison of the measured value for HC and CO as described in paragraph (d)(1) of this section with the short test standards contained in § 86.096–8(a) for light-duty vehicles or in § 86.096–9(a) for light-duty trucks. For recall testing, a pass or fail determination is made for each applicable test mode based on a comparison of the measured value for HC and CO as described in paragraph (d)(1) of this section with the short test standards contained in § 86.708(a) for light-duty vehicles or in § 86.709(a) for light-duty trucks. A vehicle passes the test mode if any pair of simultaneous values for HC and CO are below or equal to the applicable short test standards.

(e) *Test sequence—general requirements.* The test timer starts only after the requirements described in paragraphs (e) (1) through (4) of this section are met. If these conditions are not met within one minute upon completion of the preconditioning, the CST must be aborted.

(1) The vehicle is tested with the transmission in neutral or park and all accessories turned off. The engine must be at normal operating temperature (as indicated by a temperature gauge, temperature lamp, touch test on the radiator hose, or other visual observation indicating that overheating has not occurred).

(2) The tachometer must be attached to the vehicle in accordance with the analyzer manufacturer's instructions.

(3) The sample probe is inserted into the tailpipe to a minimum depth of 10 inches. If the vehicle's exhaust system prevents insertion to this depth, a tailpipe extension must be used, or the probe may be inserted into the tailpipe to CVS connector through an aperture provided for this purpose.

(4) The measured concentration of CO plus CO_2 must be greater than or equal to six percent.

(f) When the requirements listed in paragraph (e) of this section have been satisfied, the procedure selected by the Administrator from among the emission tests described in § 86.1439 is performed on the test vehicle in accordance with the conditions prescribed in this section and §§ 86.1430 and 86.1432.

(g) If a certification test vehicle fails its initial confirmatory CST, a retest must be given in accordance with the provisions of § 86.091–29(a)(3)(iii)(B)(*1*) unless the manufacturer withdraws the vehicle from the certification process.

(1) A vehicle receiving a retest must re-enter the confirmatory pathway at either:

(i) The soak time step, as described in § 86.1432, or

(ii) The drain and fill step preceding the soak time option, as described in § 86.1432(b)(1), using the same type of fuel as was used in the initial CST. The vehicle may optionally be filled to the specified level defined in § 86.082 without being drained.

(2) A vehicle receiving a retest must either:

(i) Be maintained in the same ambient temperature range as that specified for the initial confirmatory CST (as described in § 86.1430(c)) from the termination of the initial confirmatory CST throughout the retest, or,

(ii) If the vehicle is exposed to ambient temperatures outside of the specified temperature range, before it enters the wait time it must be given a warmup consisting of a full Urban Dynamometer Driving Schedule procedure at the specified ambient temperature range for the initial CST. The test vehicle will be maintained at the same ambient temperature range as that specified for the initial confirmatory CST from this step throughout the remainder of the retest.

(h) *Multiple CSTs.* The Administrator may elect to conduct more than one type of CST on a test vehicle.

(1) If the Administrator elects to change fuels between one CST and a subsequent CST, the subsequent CST initiates at the drain and fill step described in § 86.1432(b)(1).

(2) If the Administrator elects to utilize the same fuel between one CST and a subsequent CST other than a retest, the Administrator may optionally initiate the subsequent CST at the vehicle soak step specified in § 86.1432(d).

[58 FR 58426, Nov. 1, 1993; 59 FR 33913, July 1, 1994]

§ 86.1439 Certification Short Test emission test procedures—EPA.

(a) The portions of the performance warranty test procedures described in part 85, subpart W of this chapter designated as ''second-chance'' which are analogous to the CST emission test procedures do not apply to the testing performed in accordance with this subpart. The Administrator selects from among the CST emission test procedures listed in paragraphs (b) through (f) of this section, which are incorporated into the vehicle test run at the point described in § 86.1438(f); that is, after the requirements of § 86.1438(e) have been satisfied.

(b) *CST—Two-speed idle test.* This test consists of an idle sampling mode followed immediately by a high-speed sampling mode. The test timer starts (tt=0) when the conditions specified in § 86.1438(e) are met. The overall maximum test time is 290 seconds (tt=290). The test terminates immediately upon reaching the overall maximum test time. A vehicle that has not yielded passing results by the expiration of the overall test time fails the test.

(1) *Idle mode.* (i) The mode timer starts (mt=0) when the vehicle engine speed is between 350 and 1100 rpm. If engine speed exceeds 1100 rpm or falls below 350 rpm, the mode timer resets to zero and resumes timing. The minimum mode time is 30 seconds. The maximum idle mode length is 90 seconds elapsed time (mt=90).

(ii) The pass/fail analysis begins after an elapsed time of ten seconds (mt=10). A pass or fail determination is made for the vehicle and the mode terminated as described in paragraphs (b)(1)(ii) (A) and (B) of this section.

(A) The vehicle passes the idle mode if the measured values are less than or equal to the applicable short test standards as described in § 86.1438(d)(4) prior to an elapsed time of 90 seconds (mt=90). If the vehicle passes, the mode

terminates immediately, or after an elapsed time of 30 seconds (mt=30), whichever comes second.

(B) The vehicle fails the idle mode and the test is immediately terminated if the requirements of paragraph (b)(1)(i)(A) of this section are not satisfied by an elapsed time of 90 seconds (mt=90).

(2) *High-speed mode.* This mode follows immediately upon termination of the idle mode.

(i) The mode timer resets (mt=0) when the vehicle engine speed is between 2200 and 2800 rpm. If engine speed falls below 2200 rpm or exceeds 2800 rpm for more than two seconds in one excursion, or more than six seconds over all excursions within 30 seconds of the final measured value used in pass/fail determination, the measured value is invalidated and the mode continued. If any excursion lasts for more than ten seconds, the mode timer resets to zero (mt=0) and timing resumes. The minimum high-speed mode length is determined as described in paragraph (b)(2)(ii) of this section. The maximum high-speed mode length is 90 seconds elapsed time (mt=90).

(ii) The pass/fail analysis begins after an elapsed time of ten seconds (mt=10). A pass or fail determination is made for the vehicle and the mode terminates as described in paragraphs (b)(2)(ii) (A) and (B) of this section.

(A) The vehicle passes the high-speed mode and the test is immediately terminated if, at any point prior to an elapsed time of 90 seconds (mt=90), the measured values are less than or equal to the applicable short test standards as described in § 86.1438(d)(4).

(B) The vehicle fails the high-speed mode and the test is terminated if the requirements of paragraph (b)(2)(ii)(A) of this section are not satisfied by an elapsed time of 90 seconds (mt=90).

(c) *CST—Idle test.* This test consists of an idle sampling mode only. The test timer starts when the conditions specified in § 86.1438(e) are met. The overall maximum test time is 145 seconds (tt=145). The test terminates immediately upon reaching the overall maximum test time. A vehicle that has not yielded passing results by the expiration of the overall test time fails the test.

(1) The mode timer starts (mt=0) when the vehicle engine speed is between 350 and 1100 rpm. If engine speed exceeds 1100 rpm or falls below 350 rpm, the mode timer resets to zero and resumes timing. The minimum mode length is determined as described under paragraph (c)(2) of this section. The maximum mode length is 90 seconds elapsed time (mt=90).

(2) The pass/fail analysis begins after an elapsed time of ten seconds (mt=10). A pass or fail determination is made for the vehicle and the mode is terminated in accordance with paragraphs (c)(2) (i) and (ii) of this section.

(i) The vehicle passes the idle mode and the test is immediately terminated if, at any point prior to an elapsed time of 90 seconds (mt=90), the measured values are less than or equal to the applicable short test standards as described in § 86.1438(d)(4).

(ii) The vehicle fails the idle mode and the test is terminated if the requirements of paragraph (c)(2)(i) of this section are not satisfied by an elapsed time of 90 seconds (mt=90).

(d) *CST—Loaded test.* This test consists of a loaded sampling mode followed immediately by an idle sampling mode. The test timer starts (tt=0) when the conditions specified in § 86.1438(e) are met, and the gear selector is in 'drive' for automatic transmissions, or in second gear (or third gear if more appropriate) for manual transmissions. The overall maximum test time is 240 seconds (tt=240). The test terminates immediately upon reaching the overall maximum test time. A vehicle that has not yielded passing results by the expiration of the overall test time fails the test.

(1) *Loaded mode.* (i) The mode timer starts (mt=0) when the dynamometer speed is within the limits specified for the vehicle engine size according to the following schedule. If the dynamometer speed falls outside the limits for more than five seconds in one excursion, or 15 seconds over all excursions, the mode timer resets to zero and resumes timing. The minimum mode length is determined as described in paragraph (d)(1)(ii) (A) and (B) of this section. The maximum mode length is 90 seconds elapsed time (mt=90).

DYNAMOMETER TEST SCHEDULE

Gasoline engine size, no. cylinders	Roll speed, mph (kph)	Normal loading, brake hp (kilowatts)
4 or less	22–25 (35–40)	2.8–4.1 (2.1–3.1)
5–6	29–32 (47–52)	6.8–8.4 (5.1–6.3)
7 or more	32–35 (52–56)	8.4–10.8 (6.3–8.1)

(ii) The pass/fail analysis begins after an elapsed time of ten seconds (mt=10). A pass or fail determination is made for the vehicle and the mode is terminated in accordance with paragraphs (d)(1)(ii) (A) and (B) of this section.

(A) The vehicle passes the loaded mode if the measured values are less than or equal to the applicable short test standards as described in § 86.1438(d)(4) prior to an elapsed time of 90 seconds (mt=90). If the vehicle passes, the mode terminates immediately, or after an elapsed time of 30 seconds (mt=30), whichever comes second.

(B) The vehicle fails the loaded mode and the test is terminated if the requirements of paragraph (d)(1)(ii)(A) of this section are not satisfied by an elapsed time of 90 seconds (mt=90).

(2) *Idle mode.* (i) The mode timer starts (mt=0) five seconds after the dynamometer speed has reached zero and the gear selector is in 'park' or 'neutral'. The minimum idle mode length is determined as described in paragraph (d)(2)(ii) of this section. The maximum idle mode length is 90 seconds elapsed time (mt=90).

(ii) The pass/fail analysis begins after an elapsed time of ten seconds (mt=10). A pass or fail determination is made for the vehicle and the mode is terminated in accordance with paragraphs (d)(2)(ii) (A) and (B) of this section.

(A) The vehicle passes the idle mode and the test is immediately terminated if, at any point prior to an elapsed time of 90 seconds (mt=90), measured values are less than or equal to the applicable short test standards described in § 86.1438(d)(4).

(B) The vehicle fails the idle mode and the test terminates if the requirements of paragraph (d)(2)(ii)(A) of this section are not satisfied by an elapsed time of 90 seconds (mt=90).

(e) *CST—Preconditioned idle test.* This test consists of a high-speed preconditioning mode followed immediately by an idle sampling mode. The test timer starts (tt=0) when the conditions specified in § 86.1438(e) are met. The overall maximum test time is 200 seconds (tt=200). The test terminates immediately upon reaching the overall maximum test time. A vehicle that has not yielded passing results by the expiration of the overall test time fails the test.

(1) *Preconditioning mode.* The mode timer starts (mt=0) when the engine speed is between 2200 and 2800 rpm. The mode continues for an elapsed time of 30 seconds (mt=30). If engine speed falls below 2200 rpm or exceeds 2800 rpm for more than five seconds in any one excursion, or 15 seconds over all excursions, the mode timer resets to zero and resumes timing.

(2) *Idle mode.* (i) The mode timer starts (mt=0) when the vehicle engine speed is between 350 and 1100 rpm. If engine speed exceeds 1100 rpm or falls below 350 rpm, the mode timer resets to zero and resumes timing. The minimum idle mode length is determined as described in paragraph (e)(2)(ii) of this section. The maximum idle mode length is 90 seconds elapsed time (mt=90).

(ii) The pass/fail analysis begins after an elapsed time of ten seconds (mt=10). A pass or fail determination is made for the vehicle and the mode terminates as described in paragraphs (e)(2)(ii) (A) and (B) of this section.

(A) The vehicle passes the idle mode and the test is immediately terminated if, at any point prior to an elapsed time of 90 seconds (mt=90), the measured values are less than or equal to the applicable short test standards as described in § 86.1438(d)(4).

(B) The vehicle fails the idle mode and the test terminates if the requirements of paragraph (e)(2)(ii)(A) of this section are not satisfied by an elapsed time of 90 seconds (mt=90).

(f) *CST—Preconditioned two-speed idle test.* This test consists of a high-speed sampling mode followed immediately by an idle sampling mode. The test timer starts (tt=0) when the conditions specified in § 86.1438(e) are met. The overall maximum test time is 290 seconds (tt=290). The test terminates immediately upon reaching the overall maximum test time. A vehicle that has

not yielded passing results by the expiration of the overall test time fails the test.

(1) *High-speed mode.* (i) The mode timer starts (mt=0) when the vehicle engine speed is between 2200 and 2800 rpm. If the engine speed falls below 2200 rpm or exceeds 2800 rpm for more than two seconds in one excursion, or more than six seconds over all excursions within 30 seconds of the final measured value used in the pass/fail determination, the measured value is invalidated and the mode continued. If any excursion lasts for more than ten seconds, the mode timer resets to zero (mt=0) and timing resumes. The high-speed mode length is 90 seconds elapsed time (mt=90).

(ii) The pass/fail analysis begins after an elapsed time of ten seconds (mt=10). A pass or fail determination is made for the vehicle and the mode is terminated in accordance with paragraphs (f)(1)(ii) (A) and (B) of this section.

(A) The vehicle passes the high-speed mode and the mode is terminated at an elapsed time of 90 seconds (mt=90) if any measured values are less than or equal to the applicable short test standards as described in §86.1438(d).

(B) The vehicle fails the high-speed mode and the test is terminated if the requirements of paragraph (f)(1)(ii)(A) of this section are not satisfied by an elapsed time of 90 seconds (mt=90).

(2) *Idle mode.* (i) The mode timer starts (mt=0) when the vehicle engine speed is between 350 and 1100 rpm. If the engine speed exceeds 1100 rpm or falls below 350 rpm, the mode timer resets to zero and resumes timing. The minimum idle mode length is determined as described in paragraph (f)(2)(ii) of this section. The maximum idle mode length is 90 seconds elapsed time (mt=90).

(ii) The pass/fail analysis begins after an elapsed time of ten seconds (mt=10). A pass or fail determination is made for the vehicle and the mode is terminated in accordance with paragraphs (f)(2)(ii) (A) and (B) of this section.

(A) The vehicle passes the idle mode and the test is immediately terminated if, at any point prior to an elapsed time of 90 seconds (mt=90), the measured values are less than or equal to the applicable short test standards as described in §86.1438(d)(4).

(B) The vehicle fails the idle mode and the test is terminated if the requirements of paragraphs (f)(2)(ii)(A) of this section are not satisfied by an elapsed time of 90 seconds (mt=90).

[58 FR 58426, Nov. 1, 1993; 59 FR 33913, 33914, July 1, 1994]

§§86.1440–86.1441 [Reserved]

§86.1442 Information required.

(a) *General data.* The information listed in paragraphs (a) (1) through (14) of this section must be recorded with respect to each CST. Elements of this general data may be located separately from the CST emission data, as long as the general data can easily be presented together with the CST emission data when a complete data set for the vehicle is desired.

(1) Test number.

(2) Vehicle description, including engine family code, vehicle ID number, version number, manufacturer, number of cylinders, equivalent test weight, weight class and odometer reading.

(3) Date and time of day for the test.

(4) Driver and equipment operator IDs.

(5) Gas analyzers: Analyzer bench ID, analyzer ranges, recordings of analyzer output during zero, span, and sample readings.

(6) Recorder charts or computer printouts: Test number, date, vehicle ID, operator ID, and identification of the measurements recorded.

(7) Soak area ambient temperature (°F).

(8) Test cell ambient temperature (°F), barometric pressure, and humidity. (A central laboratory barometer may be used, provided that individual test cell barometric pressures are shown to be within ±0.1 percent of the barometric pressure at the central barometer location.)

(9) Test fuel: RVP and type (Otto-cycle test fuel or Cold CO test fuel).

(10) Warmup operation performed, for example, none, full Urban Dynamometer Driving Schedule (UDDS), first 505 seconds of the UDDS, other confirmatory test procedure, other transient operation.

(11) Wait time characteristics, including total time and engine off/restart cycle schedule.

(12) Preconditioning; duration and type, for example, minimum 2500 rpm idle or minimum 30 mph (48 kph) loaded steady state operation.

(13) CST procedure type, as described in § 86.1439.

(14) Dynamometer ID.

(b) *CST emission data.* For each CST, the information listed in paragraphs (b) (1) through (3) of this section must be recorded with respect to each sampling mode.

(1) The reported exhaust concentrations, i.e., those for which the product of HC+(151*CO) is at a minimum. Round initial test results to the number of decimal places contained in the respective standards expressed to one additional significant figure; round final test results to the number of decimal places contained in the respective standards. Rounding is done in accordance with ASTM E 29–90, Standard Practice for Using Significant Digits in Test Data to Determine Conformance with Specifications. This procedure has been incorporated by reference (see § 86.1).

(2) The test time and mode time at which the reported exhaust concentrations are at a minimum.

(3) Minimum CO+CO2 concentration (if applicable).

Subpart P—Emission Regulations for Otto-Cycle Heavy-Duty Engines, New Methanol-Fueled Natural Gas-Fueled, and Liquefied Petroleum Gas-Fueled Diesel-Cycle Heavy-Duty Engines, New Otto-Cycle Light-Duty Trucks, and New Methanol-Fueled Natural Gas-Fueled, and Liquefied Petroleum Gas-Fueled Diesel-Cycle Light-Duty Trucks; Idle Test Procedures

AUTHORITY: Secs. 202, 206, 207, 208, 301(a), Clean Air Act, as amended 42 U.S.C. 7521, 7525, 7541, 7542, and 7601.

SOURCE: 48 FR 52252, Nov. 16, 1983, unless otherwise noted.

§ 86.1501–90 Scope; applicability.

This subpart contains gaseous emission idle test procedures for gasoline-fueled and methanol-fueled Otto-cycle heavy-duty engines, and for gasoline-fueled and methanol-fueled Otto-cycle light-duty trucks. It applies to 1990 and later model years.

[54 FR 14611, Apr. 11, 1989]

§ 86.1501–94 Scope; applicability.

This subpart contains gaseous emission idle test procedures for light-duty trucks and heavy-duty engines for which idle CO standards apply. It applies to 1994 and later model years. The idle test procedures are optionally applicable to 1994 through 1996 model year natural gas-fueled and liquefied petroleum gas-fueled light-duty trucks and heavy-duty engines.

[60 FR 34376, June 30, 1995]

§ 86.1502–84 Definitions.

The definitions in § 86.084–2 apply to this subpart.

§ 86.1503–84 Abbreviations.

The abbreviations in § 86.084–3 apply to this subpart.

§ 86.1504–90 Section numbering; construction.

(a) The model year of initial applicability is indicated by the section number. The two digits following the hyphen designate the first model year for which a section is effective. A section remains effective until superseded.

Example: Section 86.1511–84 applies to the 1984 and subsequent model years until superseded. If § 86.1511–85 is promulgated, it would take effect beginning with the 1985 model year. Section 86.1511–83 would apply to model years 1983 and 1984.

(b) A section reference without a model year suffix refers to the section applicable for the appropriate model year.

(c) All provisions in this subpart apply to gasoline-fueled and methanol-fueled Otto-cycle heavy-duty engines, and to gasoline-fueled and methanol-fueled Otto-cycle light-duty trucks.

[54 FR 14611, Apr. 11, 1989]

§86.1504–94 Section numbering; construction.

(a) The model year of initial applicability is indicated by the section number. The two digits following the hyphen designate the first model year for which a section is effective. A section remains effective until superseded.

Example: Section 86.1511–84 applies to the 1984 and subsequent model years until superseded. If §86.1511–85 is promulgated, it would take effect beginning with the 1985 model year. Section 86.1511–83 would apply to model years 1983 and 1984.

(b) A section reference without a model year suffix refers to the section applicable for the appropriate model year.

(c) All provisions in this subpart apply to gasoline-fueled and methanol-fueled Otto-cycle heavy-duty engines, methanol-fueled Diesel-cycle heavy-duty engines, new Otto-cycle light-duty trucks, and liquefied petroleum gas-fueled, natural gas-fueled, and methanol-fueled diesel-cycle light-duty trucks.

[59 FR 48536, Sept. 21, 1994, as amended at 60 FR 34376, June 30, 1995]

§86.1505–84 Introduction; structure of subpart.

(a) This subpart describes the equipment and the procedures required to perform idle exhaust emission tests on gasoline-fueled heavy-duty engines and gasoline-fueled light-duty trucks. Subpart A sets forth the testing requirements, reporting requirements, and test intervals necessary to comply with EPA certification procedures.

(b) Four topics are addressed in this subpart. §§86.1505–84 through 86.1515–84 set forth specifications and equipment requirements; §§86.1516–84 through 86.1526–84 discuss calibration methods and frequency; test procedures and data requirements are listed in §§86.1527–84 through 86.1542–84; and calculation formulae are found in §86.1544–84.

§86.1505–90 Introduction; structure of subpart.

(a) This subpart describes the equipment and the procedures required to perform idle exhaust emission tests on gasoline-fueled and methanol-fueled Otto-cycle heavy-duty engines, and gasoline-fueled and methanol-fueled Otto-cycle light-duty trucks. Subpart A sets forth the testing requirements, reporting requirements and test intervals necessary to comply with EPA certification procedures.

(b) Four topics are addressed in this subpart. Sections 86.1505 through 86.1515 set forth specifications and equipment requirement; §§86.1516 through 86.1526 discuss calibration methods and frequency; test procedures and data requirements are listed in §§86.1527 through 86.1542 and calculation formula are found in §86.1544.

[54 FR 14611, Apr. 11, 1989]

§86.1505–94 Introduction; structure of subpart.

(a) This subpart describes the equipment and the procedures required to perform idle exhaust emission tests on heavy-duty engines and light-duty trucks. Subpart A of this part sets forth the testing requirements, reporting requirements and test intervals necessary to comply with EPA certification procedures.

(b) Four topics are addressed in this subpart. Sections 86.1505 through 86.1515 set forth specifications and equipment requirements; §§86.1516 through 86.1526 discuss calibration methods and frequency; test procedures and data requirements are listed in §§86.1527 through 86.1542 and calculation formulas are found in §86.1544.

[59 FR 48536, Sept. 21, 1994, as amended at 60 FR 34376, June 30, 1995]

§86.1506–90 Equipment required and specifications; overview.

(a) This subpart contains procedures for performing idle exhaust emission tests on gasoline-fueled and methanol-fueled Otto-cycle heavy-duty engines, and gasoline-fueled and methanol-fueled Otto-cycle light-duty trucks. Equipment required and specifications are as follows:

(1) *Exhaust emission tests.* All engines and vehicles subject to this subpart are tested for exhaust emissions. Necessary equipment and specifications appear in §§86.1509 through 86.1511.

(2) *Fuel and analytical tests.* Fuel requirements for idle exhaust emission

testing are specified in § 86.1513. Analytical gases are specified in § 86.1514.

(b) [Reserved]

[54 FR 14612, Apr. 11, 1989]

§ 86.1506–94 Equipment required and specifications; overview.

(a) This subpart contains procedures for performing idle exhaust emission tests on Otto-cycle heavy-duty engines and Otto-cycle light-duty trucks. Equipment required and specifications are as follows:

(1) *Exhaust emission tests.* All engines and vehicles subject to this subpart are tested for exhaust emissions. Necessary equipment and specifications appear in §§ 86.1509 through 86.1511.

(2) *Fuel and analytical tests.* Fuel requirements for idle exhaust emission testing are specified in § 86.1513. Analytical gases are specified in § 86.1514.

(b) [Reserved]

[59 FR 48536, Sept. 21, 1994]

§ 86.1509–84 Exhaust gas sampling system.

(a) The exhaust gas sampling system shall transport the exhaust sample from the engine or vehicle to the analysis system in such a manner as to maintain the integrity of the sample constituents that are to be analyzed.

(b) The sample system shall supply a dry sample (i.e., water removed) to the analysis system.

(c) A CVS sampling system with bag analysis as specified in § 86.1309 or § 86.109 or with continuous analysis as specified in § 86.1310 is permitted as applicable. The inclusion of an additional raw carbon dioxide (CO_2) analyzer as specified in §§ 86.309–79 and 86.316–79 is required if the CVS system is used, in order to accurately determine the CVS dilution factor. The heated sample line specified in § 86.309–79 and § 86.310–79 for raw emission requirements is not required for the raw CO_2 measurement.

(d) A raw exhaust sampling system as specified in § 86.309–79 and § 86.310–79 is permitted.

[48 FR 52252, Nov. 16, 1983, as amended at 60 FR 34376, June 30, 1995]

§ 86.1511–84 Exhaust gas analysis system.

(a) Analyzers used for this subpart shall meet the following specifications:

(1) The analyzer used shall conform to the emission measurement accuracy provisions of § 86.1338.

(2) The resolution of the readout device(s) for the range specified in paragraph (a)(1) of this section shall be equal to or less than 0.05 percent for the CO analyzer.

(3) For the range specified in paragraph (a)(1) of this section, the precision shall be less than ±3 percent of full-scale deflection. The precision is defined as two times the standard deviation of five repetitive responses to a given calibration gas.

(4) For the range specified in paragraph (a)(1) of this section, the mean response to a zero calibration gas shall not exceed ±3 percent of full-scale deflection during a 1-hour period.

(5) For the range specified in paragraph (a)(1) of this section the drift of the mean calibration response shall be less than ±3 percent of full scale during a 1-hour period. The calibration response is defined as the analyzer response to a calibration gas after the analyzer has been spanned by the electrical spanning network at the beginning of the 1-hour period.

(6) The analyzer must respond to an instantaneous step change at the entrance to the sampling system with a response equal to 90 percent of that step change within 15 seconds or less on the range specified in paragraph (a)(1) of this section. The step change shall be at least 60 percent of full-scale deflection.

(7) The interference gases listed shall individually or collectively produce an analyzer reading less than ±2 percent of full scale on the range specified in paragraph (a)(1) of this section.

Interference gas	Concentration	Applicable analyzer
CO_2	14 percent	CO
C_3H_8	1 percent	CO
H_2O	Saturated vapor at 100° F	CO
NO_X	1,000 ppm	CO
O_2	5 percent	CO

(8) The analyzer shall be able to meet the specifications in paragraph (a) of

this section under the following conditions:

(i) After a 30 minute warm-up from the prevailing ambient conditions;

(ii) Between 0 to 85 percent relative humidity; and

(iii) During variations of ±50 percent of nominal sample flow.

(b) The inclusion of a raw CO_2 analyzer as specified in §86.309–79 and §86.316–79 is required in order to accurately determine the CVS dilution factor.

[48 FR 52252, Nov. 16, 1983, as amended at 60 FR 34377, June 30, 1995]

§86.1513–90 Fuel specifications.

The requirements of this section are set forth in §86.1313–90(a) for heavy-duty engines, and in §86.113–90(a) for light-duty trucks.

[53 FR 478, Jan. 7, 1988]

§86.1513–94 Fuel specifications.

The requirements of this section are set forth in §86.1313–94 for heavy-duty engines and in §86.113–94 for light-duty trucks.

[59 FR 48536, Sept. 21, 1994]

§86.1514–84 Analytical gases.

(a) The final idle emission test results shall be reported as percent for carbon monoxide on a dry basis.

(b) If the raw CO sampling system in §86.309–79 is used, the analytical gases specified in §86.308–79 shall be used.

(c) If a CVS sampling system is used, the analytical gases specified in §86.1314 shall be used.

[48 FR 52252, Nov. 16, 1983, as amended at 51 FR 24613, July 7, 1986; 60 FR 34377, June 30, 1995]

§86.1516–84 Calibration; frequency and overview.

(a) Calibrations shall be performed as specified in §§86.1518–84 through 86.1526–84.

(b) At least monthly or after any maintenance which could alter calibration, check the calibration of the CO analyzer. Adjust or repair the analyzer as necessary.

(c) Water traps, filters, or conditioning columns should be checked before each test.

§86.1519–84 CVS calibration.

If the CVS system is used for sampling during the idle emission test, the calibration instructions are specified in §86.1319–84 for heavy-duty engines, and §86.119–78 for light-duty trucks.

§86.1522–84 Carbon monoxide analyzer calibration.

(a) *Initial check.* (1) Follow good engineering practice for instrument start-up and operation. Adjust the analyzer to optimize performance on the range specified in §86.1511–84(a)(1).

(2) Calibrate the analyzer with the calibration gas specified in §86.1514–84.

(3) Adjust the electrical span network such that the electrical span point is correct when the analyzer reads the calibration gas correctly.

(4) Determine that the analyzer complies with the specifications in §86.1511–84.

(b) *Periodic check.* Follow paragraphs (a) (1), (2), and (3) of this section as specified by §86.1516–84(b). Adjust or repair the analyzer as necessary.

§86.1524–84 Carbon dioxide analyzer calibration.

(a) The calibration requirements for the dilute-sample CO_2 analyzer are specified in §86.1324–84 for heavy-duty engines and §86.124–78 for light-duty trucks.

(b) The calibration requirements for the raw CO_2 analyzer are specified in §86.330–79.

§86.1526–84 Calibration of other equipment.

Other test equipment used for testing shall be calibrated as often as necessary according to good engineering practice.

§86.1527–84 Idle test procedure; overview.

(a) The idle emission test procedure is designed to determine the raw concentration (in percent) of CO in the exhaust flow at idle. The test procedure begins with the engine at normal operating temperature. (For example, the warm-up for an engine may be the transient engine or chassis dynamometer test.)

(b) Raw emission sampling must be made before dilution occurs from a single exhaust pipe in which exhaust products are homogeneously mixed. The configuration for dual-exhaust systems must also allow for raw emission measurements, which will require that an additional ''Y'' pipe be placed in the exhaust system before dilution.

§ 86.1530–84 Test sequence; general requirements.

(a) The following test sequence lists the major steps encountered during the idle test:

Preparation
Warm-up (or Emission Test)
Preconditioning, 30 seconds minimum, six minutes maximum
Idle Stabilization, 30±5 seconds
Idle Emission Sampling, one minute minimum, six minutes maximum

These steps are described by subsequent procedures.

(b) Ambient test cell conditions during the test shall be those specified in § 86.1330–84 or § 86.130–78.

§ 86.1537–84 Idle test run.

The following steps shall be taken for each test:

(a) Check the device(s) for removing water from the exhaust sample and the sample filter(s). Remove any water from the water trap(s). Clean and replace the filter(s) as necessary.

(b) Set the zero and span points of the CO analyzer with the electrical spanning network or with analytical gases.

(c) Achieve normal engine operating condition. The transient engine or chassis dynamometer test is an acceptable technique for warm-up to normal operating condition for the idle test. If the emission test is not performed prior to the idle emission test, a heavy-duty engine may be warmed-up according to § 86.1332–84(d)(2) (i) through (iv). A light-duty truck may be warmed up by operation through one Urban Dynamometer Driving Schedule test procedure (see § 86.115–78 and appendix I to this part).

(d) Operate the warm engine at 2500 ±50 rpm, or rated torque speed for diesel-cycle engines, and zero load for a minimum of 30 seconds and a maximum of 6 minutes.

(e) If the CVS sampling system is used, the following procedures apply:

(1) If bag samples are drawn, with the sample selector valves in the standby position connect evacuated sample collection bags to the dilute exhaust and dilution air sample collection systems.

(2) Start the CVS (if not already on), the sample pumps, integrators, and the raw CO_2 analyzer, as applicable. (The heat exchanger of the constant volume sampler, if used, shall be running at operating temperature before sampling begins.)

(3) Adjust the sample flow rates to the desired flow rate and set the gas flow measuring devices to zero.

(4) Operate the engine or vehicle at curb idle for 30±5 seconds with the clutch disengaged or in neutral gear. A heavy-duty engine may also be disconnected from the dynamometer, or the dynamometer may be shut off.

(5) Begin raw and dilute sampling.

(6) For bag sampling, sample idle emissions long enough to obtain a sufficient bag sample, but in no case shorter than 60 seconds nor longer than 6 minutes. Follow the sampling and exhaust measurements requirements of § 86.340–79(e) for the conducting of the raw CO_2 measurement.

(7) As soon as possible, transfer the idle test exhaust and dilution air samples to the analytical system and process the samples according to § 86.1540–84. Obtain a stabilized reading of the exhaust sample on all analyzers within 20 minutes of the end of the sample collection phase of the test.

(f) If the raw exhaust sampling and analysis technique specified in § 86.309–79 is used, the following procedures apply:

(1) Warm up the engine or vehicle per paragraphs (c) and (d) of this section. Operate the engine or vehicle at the conditions specified in paragraph (e)(4) of this section.

(2) Follow the sampling and exhaust measurement requirements of § 86.340–79(e). The idle sample shall be taken for 60 seconds minimum, and no more than 64 seconds. The chart reading procedures of § 86.343–79 shall be used to determine the analyzer response.

(g) If the engine or vehicle stalls at any time during the test run, the test is void.

[48 FR 52252, Nov. 16, 1983, as amended at 60 FR 34377, June 30, 1995]

§86.1540–84 Idle exhaust sample analysis.

(a) Record the CO idle concentrations in percent.

(b) If the CVS sampling system is used, the analysis procedures for dilute CO and CO_2 specified in §86.1340–84 apply. Follow the raw CO_2 analysis procedure specified in §86.343–79 for the raw CO_2 analyzer.

(c) If the continuous raw exhaust sampling technique (§86.309–79) is used, the analysis procedures for CO specified in §86.343–79 apply.

§86.1542–84 Information required.

(a) *General data—heavy-duty engines.* Information shall be recorded for each idle emission test as specified in §86.1344–84 (b), (c), and (d). The following test data is required:

(1) Date and time of day.

(2) Test number.

(3) Engine intake air or test cell temperature.

(4) Barometric pressure.

NOTE: A central laboratory barometer may be used: *Provided,* That individual test cell barometric pressures are shown to be within ±0.1 percent of the barometric pressure at the central barometer location.

(5) Engine intake or test cell and CVS dilution air humidity.

(6) Curb idle speed during the test.

(7) Idle exhaust CO concentration (dry basis).

(8) Idle exhaust raw CO_2 concentration (if applicable).

(9) Dilute bag sample CO and CO_2 concentrations (if applicable).

(10) Total CVS flow rate with calculated dilution factor for the idle mode (if applicable).

(b) *General data—light-duty trucks.* The following information shall be recorded with respect to each test:

(1) Test number.

(2) System or device tested (brief description).

(3) Date and time of day for the test.

(4) Instrument operated.

(5) Vehicle: ID number, manufacturer, model year, standards, engine family, evaporative emissions family, basic engine description (including displacement, number of cylinders, turbocharger used and catalyst usage), fuel system (including number of carburetors, number of carburetor barrels, fuel injection type and fuel tank(s) capacity and location), engine code, gross vehicle weight rating, inertia weight class and transmission configuration, as applicable.

(6) All pertinent instrument information such as tuning, gain, serial number, detector number and range. As an alternative a reference to a vehicle test cell number may be used, with the advance approval of the Administrator, provided test cell calibration records show the pertinent instrument information.

(7) Recorder charts or computer printouts: Identify zero, span, exhaust gas and dilution air sample traces or computer readings (if applicable).

(8) Test cell ambient temperature and, if applicable, barometric pressure and humidity.

NOTE: A central laboratory barometer may be used: *Provided,* That individual test cell barometric pressures are shown to be within + 0.1 percent of the barometric pressure at the central barometer location.

(9) Pressure of the mixture of exhaust and dilution air entering the CVS metering device (or pressure drop across the CFV), the pressure increase across the device, and the temperature at the inlet (if applicable). The temperature may be recorded continuously or digitally to determine temperature variations (if applicable).

(10) The number of revolutions of the positive displacement pump accumulated while exhaust samples are being collected (if applicable). The number of standard cubic feet metered by a critical flow venturi would be the equivalent record for a CFV (if applicable).

(11) The humidity of the dilution air.

NOTE: If conditioning columns are not used (see §§86.122 and 86.144) this measurement can be deleted. If the conditioning columns are used and the dilution air is taken from the test cell, the ambient humidity can be used for this measurement.

(12) Curb idle engine speed during the test.

(13) Idle exhaust CO concentration (dry basis).

(14) Idle exhaust raw CO_2 concentration (if applicable).

(15) Dilute bag sample CO and CO_2 concentrations (if applicable).

(16) Total CVS flow rate with calculated dilution factor for the idle mode (if applicable).

[48 FR 52252, Nov. 16, 1983, as amended at 49 FR 48149, Dec. 10, 1984]

§ 86.1544–84 Calculation; idle exhaust emissions.

(a) The final idle emission test results shall be reported as percent for carbon monoxide on a dry basis.

(b) If a CVS sampling system is used, the following procedure shall apply:

(1) Use the procedures, as applicable, in § 86.1342–84 to determine the dilute wet-basis CO and CO_2 in percent.

(2) Use the procedure, as applicable, in § 86.345–79 to determine the raw dry-basis CO_2 in percent.

(3) Convert the raw dry-basis CO_2 to raw wet-basis. An assumption that the percent of water by volume in the raw sample is equal to the percent of raw dry-basis CO_2 minus 0.5 percent is acceptable. For example:

10.0% dry $CO_2 - 0.5\% = 9.5\%$ water
$(1.00 - 0.095)$ (10.0% dry CO_2)=9.05% wet CO_2

(4) Calculate the CVS dilution factor (DF) by:

$$DF = \frac{\text{Raw wet } CO_2 - \text{background } CO_2}{\text{Dilute wet } CO_2 - \text{background } CO_2}$$

(5) Convert the dilute wet-basis CO to dilute dry-basis values. An assumption that the percent of water by volume in the sample bag is 2 percent is acceptable. For example:

Dilute dry CO=(dilute wet CO)/(1.00–0.02)

(6) Calculate the raw dry-basis CO values by:

Raw dry CO=(DF) (dilute dry CO)

(c) If the raw exhaust sampling and analysis system specified in § 86.309–79 is used, the percent for carbon monoxide on a dry basis shall be calculated using the procedure, as applicable, in § 86.345–79.

(Secs. 202, 203, 206, 207, 208, 301a, Clean Air Act, as amended; 42 U.S.C. 7521, 7522, 7525, 7541, 7542, 7601a)

[48 FR 52252, Nov. 16, 1983, as amended at 49 FR 48149, Dec. 10, 1984; 50 FR 10708, Mar. 15, 1985; 51 FR 24613, July 7, 1986]

Subpart Q—Regulations for Altitude Performance Adjustments for New and In-Use Motor Vehicles and Engines

AUTHORITY: Secs. 215 and 301, Clean Air Act, as amended (42 U.S.C. 7550 and 7601).

SOURCE: 45 FR 66956, Oct. 8, 1980, unless otherwise noted.

§ 86.1601 General applicability.

This subpart applies to manufacturers of motor vehicles and motor vehicle engines (hereafter referred to as vehicles) which are subject to the requirements of title II of the Clean Air Act. This subpart applies to the following vehicles:

(a) 1968 and later model year light-duty vehicles and light-duty trucks.

(b) 1970 and later model year heavy-duty engines built after December 31, 1969.

(c) 1978 and later model year motorcycles built after December 31, 1977.

§ 86.1602 Definitions.

The definitions provided in subpart A also apply in this subpart. Additional definitions that apply in this subpart are as follow:

Altitude performance adjustments are adjustments or modifications made to vehicle, engine, or emission control functions in order to improve emission control performance at altitudes other than those for which the vehicles were designed.

Low altitude means any elevation less than or equal to 1,219 meters (4,000 feet).

Manufacturer parts are parts produced or sold by the manufacturer of the motor vehicle or motor vehicle engine.

§86.1603 General requirements.

(a) Manufacturers of vehicles specified in §86.1601 shall submit to the Administrator for approval the following altitude performance adjustment instructions.

(1) Low-altitude adjustment instructions for vehicles certified to meet the appropriate high-altitude emission standards.

(2) High-altitude adjustment instructions for vehicles certified to meet the appropriate low-altitude emission standards.

(b) Manufacturers are not required to submit altitude adjustment instructions for vehicles equipped with systems or devices that compensate (in full or in part) the engine fuel metering system for air density changes. Manufacturers claiming this exemption must submit to the Administrator for approval a notification of the claim specifying the affected vehicles. The notification must also describe the compensating system used.

(c) Manufacturers may request the Administrator to waive the application of this regulation for vehicles which potentially may never be operated at an altitude other than that for which they were designed (such as vehicles which are not offered for sale within the continental United States).

(d) Manufacturers shall meet the requirements of paragraph (a), according to the following schedule:

(1) Altitude adjustment instructions for all 1980 and earlier model year vehicles or engines shall be submitted to the Administrator within one (1) year of the effective date of this regulation.

(2) Altitude adjustment instructions for 1982 and later model year vehicles or engines shall be submitted to the Administrator within 30 days of the issuance of the certificate of conformity for those vehicles or engines. For vehicles or engines certified for the 1981 model year before the publication of this regulation, altitude adjustment instructions shall be submitted within 90 days of the publication of this regulation.

(e) Failure to submit altitude performance adjustment instructions in accordance with this section is a violation of section 203(a)(3) of the Clean Air Act and may result in penalties as specified in section 205 of the Clean Air Act. The Administrator may grant extensions of the schedule in paragraph (c) if the manufacturer submits a written request to the Administrator specifying the reasons for the need for the extension. Requests for an extension must be received by EPA at least 5 working days prior to the submittal date contained in paragraph (d).

(f) The adjustment instructions (including labels) that the Administrator approves under this subpart shall be made available by the manufacturer at no cost to service outlets and the general public. EPA encourages manufacturers to notify vehicle owners in high-altitude areas of the availability of high-altitude adjustments.

(g) If altitude adjustments are performed according to the instructions approved by the Administrator, they will not be treated as violations of the tampering provisions of section 203(a) of the Act except as described below:

§86.1604 Conditions for disapproval.

(a) The Administrator shall not approve altitude performance adjustments that will:

(1) Cause any regulated pollutant emission level to increase if the emission level exceeded the appropriate emission standard before adjustment was made.

(2) Cause any regulated pollutant emission level to exceed the appropriate emission standard if the emission level did not exceed the emission standard before the adjustment was made.

(3) For light-duty vehicles, light-duty trucks, motorcycles, heavy-duty gasoline-fueled engines, cause any reduction of vehicle performance (as evaluated by the manufacturer) such that vehicle drivers will likely complain.

(4) Be of such technical complexity or require such complex, expensive, or exclusive equipment that a competent mechanic in an average service establishment cannot perform the adjustments correctly. Adjustment procedures should not require knowledge or training beyond that required to perform normal engine maintenance. All required equipment must be available to any service establishment at competitive cost.

(5) Require the use of manufacturer parts, unless they are necessary to ensure emission control performance and unless the Administrator grants a waiver under section 207(c)(3)(B) of the Act.

(6) Removes or defeats the parameter adjustment controls for the parameters listed in §§86.081–22(e)(1)(i) and 86.082–22(e)(1)(i) for light-duty vehicles and light-duty trucks, and §86.428–80(d) for motorcycles unless:

(i) The manufacturer determines that it is reasonable to restore the parameter adjustment control in use and provides appropriate instruction as part of the high-altitude performance adjustment instructions, or

(ii) The manufacturer determines that is is not reasonable to restore the parameter adjustment control in use and alternatively includes on the label required in §86.1606 a statement to the effect that the labeled vehicle can be adjusted but that adjustment to other than manufacturer specification may be considered violation of Federal law.

(b) If the Administrator determines that the altitude performance adjustment instructions cannot be approved, the Administrator shall notify the manufacturer in writing of the disapproval. This notification shall explain the reasons for the disapproval.

(1) Within 20 working days of the date of a notification of disapproval, the manufacturer may file a written appeal to the Administrator. The Administrator may allow additional oral or written testimony prior to rendering a final decision.

(2) If the manufacturer files no appeal with the Administrator, the disapproval becomes final.

(3) Within 30 days following the Administrator's final decision of disapproval, the manufacturer must submit new altitude performance adjustment instructions applying to all of the vehicles for which the disapproved instructions applied. If these new instructions are not submitted within 30 days, EPA may take action under sections 203(a)(3) and 205 of the Act. If the new altitude performance adjustment instructions are disapproved by the Administrator, the manufacturer may follow the appeal procedures under paragraphs (b)(1) and (b)(2) of this section.

(c) If the Administrator makes a final decision to disapprove the new instructions, EPA may take action under sections 203(a)(3) and 205 of the Act.

§ 86.1605 Information to be submitted.

(a) Manufacturers shall submit to the Administrator the text of the altitude performance adjustment instructions to be provided to vehicle owners and service establishments. Each set of altitude performance adjustment instructions must set forth the adjustment procedure (including the installation of the label required by §86.1606) to be followed and identify the vehicles for which the instructions are applicable. At a minimum, each set of instructions shall identify the vehicle applicability by manufacturer, car line, model year, engine displacement, engine family, and exhaust emission control systems. Manufacturers may specify vehicle applicability in greater detail if necessary, but such specifications must be identifiable to the public and the service industry through vehicle marking or codes.

(b) The manufacturer shall submit to the Administrator the following information about the adjustments:

(1) Specifications of changes in calibrations of any component, including the original and new calibration values or curves;

(2) Descriptions of component additions, including a full description of the new components along with the configurations (sketch or drawing), calibration values, and part numbers;

(3) Descriptions of component replacements, including all items in paragraph (b)(2) of this section, for the new parts. Also, a description of the differences between the original component and the new component with respect to design, calibration, and function;

(4) Descriptions of any special tools necessary to perform the adjustments.

(c) The manufacturer shall submit to the Administrator the following evaluations of the adjustments:

(1) A statement that the conditions of §86.1604 (a) (1) and (2) are not caused by the adjustment, and supporting information for this statement consisting of technical evaluations (consistent

with good engineering practice) or emission test data.

(2) A statement that vehicle performance is generally unchanged or improved as result of the adjustments, and supporting information for this statement consisting of technical evaluations or driver evaluations.

(3) Information that shows compliance with section 202(a)(4)(A) of the Act (which prohibits vehicles from causing unreasonable risks to public health, welfare, and safety).

(d) The manufacturer shall submit to the Administrator for approval a copy or sample of the label required by §86.1606 and a copy of the instructions for installation of the label.

§86.1606 Labeling.

(a) The manufacturer shall make available to the public as part of the altitude performance adjustment instructions the labels described in this section. Instructions for installing the labels according to the requirements of this section shall be provided with each label.

(b) The label installation instructions shall indicate the following information.

(1) For light-duty vehicles, light-duty trucks, and heavy-duty engines, the label should be affixed in a readily visible position in the engine compartment and beside (to the extent possible) the existing label which is required under §86.079–35.

(2) For motorcycles, the label should be affixed in a readily accessible position and beside (to the extent possible) the existing label which is required under §86.413–78(a)(1).

(3) The instructions shall also indicate that the label should not be affixed to any equipment that can be easily detached from the vehicle.

(c) The label must be constructed such that if installed properly, it cannot be removed without destroying or defacing the label.

(d) The label shall contain the following information lettered in the English language in block letters and numerals, which must be of a color that contrasts with the background of the label:

(1) The label heading: Vehicle Emission Control Information Update;

(2) Full corporate name and trademark of the vehicle manufactuer;

(3) The statement: ''This vehicle has been (adjusted) (modified) to improve emission control performance when operated at (high) (low) altitude'';

(4) Information on where altitude performance adjustment instructions may be obtained or include the actual altitude performance adjustment instructions;

(5) The new tuneup specifications (if changed from the original label specifications) at the applicable altitude.

Subpart R—General Provisions for the Voluntary National Low Emission Vehicle Program for Light-Duty Vehicles and Light-Duty Trucks

SOURCE: 62 FR 31242, June 6, 1997, unless otherwise noted.

§86.1701–99 General applicability.

(a) The provisions of this subpart may be adopted by vehicle manufacturers pursuant to the provisions specified in §86.1705. The provisions of this subpart are generally applicable to 1999 and later model year light-duty vehicles and light light-duty trucks to be sold in the Northeast Trading Region, and 2001 and later model year light-duty vehicles and light light-duty trucks to be sold in the United States. In cases where a provision applies only to certain vehicles based on model year, vehicle class, motor fuel, engine type, vehicle emission category, intended sales destination, or other distinguishing characteristics, such limited applicability is cited in the appropriate section or paragraph. The provisions of this subpart shall be referred to as the ''National Low Emission Vehicle Program'' or ''National LEV'' or ''NLEV.''

(b) All requirements of 40 CFR parts 85 and 86, unless specifically superseded by the provisions of this subpart, shall apply to vehicles under the National LEV Program. Compliance with the provisions of this subpart will be deemed compliance with some of the requirements of 40 CFR parts 85 and 86, as set forth elsewhere in this subpart.

(c) The requirements of this subpart apply to new vehicles manufactured by covered manufacturers through model year 2003. In addition, the requirements of this subpart apply to new vehicles manufactured by covered manufacturers for model years prior to the first model year for which a mandatory federal exhaust emissions program for light-duty vehicles and light light-duty trucks is at least as stringent as the National LEV program with respect to NMOG, NO_X, and CO exhaust emissions, as determined by the Administrator, provided that such a program is promulgated no later than December 15, 2000, and is effective no later than model year 2006.

(d) Adoption of the National LEV program does not impose gasoline or other in-use fuel requirements and is not intended to require any new federal or state regulation of fuels. Vehicles under National LEV will be able to operate on any fuels, including conventional gasoline, that, in the absence of the National LEV program, could be sold under federal or state law.

[62 FR 31242, June 6, 1997. Redesignated and amended at 63 FR 966, Jan. 7, 1998]

§ 86.1702–99 Definitions.

(a) The definitions in subpart A of this part apply to this subpart, except where the same term is defined differently in paragraph (b) of this section.

(b) The following definitions shall apply to this subpart:

Advanced technology vehicle (ATV) means any light-duty vehicle or light light-duty truck that is covered by a federal certificate of conformity or an Executive Order, as defined in § 86.1002, which is either:

(1) A dual fuel, flexible fuel, or dedicated alternatively fueled vehicle certified as a TLEV or more stringent when operated on the alternative fuel;

(2) A ULEV or Inherently Low-Emission Vehicle (ILEV), as defined in 40 CFR 88.302, either conventionally or alternatively fueled;

(3) An HEV or ZEV.

Alcohol fuel means either methanol or ethanol as those terms are defined in this subpart.

All-electric range test means a test sequence used to determine the range of an electric vehicle or of a hybrid electric vehicle without the use of its auxiliary power unit. The All-Electric Range Test cycle is defined in § 86.1770.

All States Trading Region (ASTR) means the region comprised of all states except the OTC States that have not opted into National LEV pursuant to the opt-in provisions at § 86.1705 or that have opted out of National LEV and whose opt-outs have become effective, as provided at § 86.1707; California; and any state outside the OTR with a Section 177 Program in effect that does not allow National LEV as a compliance alternative.

Averaging sets are the categories of LDVs and LDTs for which the manufacturer calculates a fleet average NMOG value. The four averaging sets for fleet average NMOG value calculation purposes are:

(1) Class A delivered to a point of first sale in the Northeast Trading Region;

(2) Class A delivered to a point of first sale in the All States Trading Region;

(3) Class B delivered to a point of first sale in the Northeast Trading Region;

(4) Class B delivered to a point of first sale in the All States Trading Region.

Axle ratio means the number of times the input shaft to the differential (or equivalent) turns for each turn of the drive wheels.

Battery pack means any electrical energy storage device consisting of any number of individual battery modules which is used to propel electric or hybrid electric vehicles.

Certification level means the official exhaust emission result from an emission-data vehicle which has been adjusted by the applicable mass deterioration factor and is submitted to the Administrator for use in determining compliance with an emission standard for the purpose of certifying a particular engine family. For those engine families which are certified using reactivity adjustment factors developed by the manufacturer pursuant to appendix XVII of this part, the exhaust NMOG certification level shall include adjustment by the ozone deterioration factor.

Class A comprises LDVs and LDTs 0–3750 lbs LVW that are subject to the provisions of this subpart.

Class B comprises LDTs 3751–5750 lbs LVW that are subject to the provisions of this subpart.

Continually regenerating trap oxidizer system means a trap oxidizer system that does not utilize an automated regeneration mode during normal driving conditions for cleaning the trap.

Conventional gasoline means any certification gasoline which meets the specifications of § 86.113(a). The ozone-forming potential of conventional gasoline vehicle emissions shall be determined by using the methods and gasoline specifications contained in appendix XVII of this part.

Core Stable Standards means the standards and other requirements listed in § 86.1707(d)(9)(i) (A) through (F).

Covered state means a state that meets the conditions specified under § 86.1705(d).

Covered vehicle or engine means a vehicle specified in § 86.1701(a), or an engine in such a vehicle, that is manufactured by a covered manufacturer.

Credits means fleet average NMOG credits as calculated from the amount that the manufacturer's applicable fleet average NMOG value is below the applicable fleet average NMOG standard, times the applicable production for a given model year. NMOG credits have units of g/mi.

Debits means fleet average NMOG debits as calculated from the amount that the manufacturer's applicable fleet average NMOG value is above the applicable fleet average NMOG standard, times the applicable production for a given model year. NMOG debits have units of g/mi.

Dedicated ethanol vehicle means any ethanol-fueled motor vehicle that is engineered and designed to be operated solely on ethanol.

Dedicated methanol vehicle means any methanol-fueled motor vehicle that is engineered and designed to be operated solely on methanol.

Diesel engine means any engine powered with diesel fuel, gaseous fuel, or alcohol fuel for which diesel engine speed/torque characteristics and vehicle applications are retained.

Electric vehicle means any vehicle which operates solely by use of a battery or battery pack. This definition also includes vehicles which are powered mainly through the use of an electric battery or battery pack, but which use a flywheel that stores energy produced by the electric motor or through regenerative braking to assist in vehicle operation.

Element of design means any control system (i.e., computer software, electronic control system, emission control system, computer logic), and/or control system calibrations and/or the results of systems interaction, and/or hardware items on a motor vehicle or motor vehicle engine.

Ethanol means any fuel for motor vehicles and motor vehicle engines that is composed of either commercially available or chemically pure ethanol (CH_3CH_2OH) and gasoline as specified in § 86.1771 (Fuel Specifications). The required fuel blend is based on the type of ethanol-fueled vehicle being certified and the particular aspect of the certification procedure being conducted.

Ethanol vehicle means any motor vehicle that is engineered and designed to be operated using ethanol as a fuel.

Executive Officer of the California Air Resources Board (ARB), as used in the referenced materials listed in § 86.1 and appendix XIII of this part, means the Administrator of the Environmental Protection Agency (EPA).

Existing ZEV Mandate means any state regulation or other law that imposes (or purports to impose) obligations on auto manufacturers to produce, deliver for sale, or sell a certain number or percentage of ZEVs and that was adopted prior to December 16, 1997.

Fleet average NMOG value is the fleet average NMOG value calculated for a particular averaging set, based upon the applicable production for that averaging set.

49 states is the region comprised of the United States excluding California.

Fuel-fired heater means a fuel burning device which creates heat for the purpose of warming the passenger compartment of a vehicle but does not contribute to the propulsion of the vehicle.

Gaseous fuels means liquefied petroleum gas, compressed natural gas, or liquefied natural gas fuels for use in motor vehicles.

Hybrid electric vehicle (HEV) means any vehicle which is included in the definition of a ''series hybrid electric vehicle,'' a ''parallel hybrid electric vehicle,'' or a ''battery assisted combustion engine vehicle.''

Low emission vehicle (LEV) means any vehicle certified to the low emission vehicle standards specified in this subpart.

Low volume manufacturer, for a particular model year, means any vehicle manufacturer that: Is considered a ''small volume manufacturer'' by the State of California according to the State of California regulatory definition of ''small volume manufacturer'', contained in the California Regulatory Requirements Applicable to the National Low Emission Vehicle Program (October, 1996), which is incorporated by reference (see § 86.1); and has nationwide sales of light-duty vehicles and light light-duty trucks less than or equal to 40,000 units per model year based on the average number of vehicles sold by the manufacturer for each of the three most recent model years. For manufacturers certifying for the first time, model-year sales shall be based on projected sales.

Methane reactivity adjustment factor means a factor applied to the mass of methane emissions from natural gas fueled vehicles for the purpose of determining the gasoline equivalent ozone-forming potential of the methane emissions.

Methanol means any fuel for motor vehicles and motor vehicle engines that is composed of either commercially available or chemically pure methanol (CH_3OH) and gasoline as specified in § 86.1771 (Fuel Specifications). The required fuel blend is based on the type of methanol-fueled vehicle being certified and the particular aspect of the certification procedure being conducted.

Methanol vehicle means any motor vehicle that is engineered and designed to be operated using methanol as a fuel.

Natural gas means either compressed natural gas or liquefied natural gas.

Natural gas vehicle means any motor vehicle that is engineered and designed to be operated using either compressed natural gas or liquefied natural gas.

Non-Core Stable Standards means the standards and other requirements listed in § 86.1707(d)(9)(i) (G) through (L).

Non-methane organic gases (NMOG) means the sum of oxygenated and non-oxygenated hydrocarbons contained in a gas sample as measured in accordance with Chapter 5 of the California Regulatory Requirements Applicable to the National Low Emission Vehicle Program (October, 1996). These requirements are incorporated by reference (see § 86.1).

Non-regeneration emission test means a complete emission test which does not include a regeneration.

Northeast Trading Region (NTR) means the region comprised of the states that meet the conditions specified under § 86.1705(d).

Organic material non-methane hydrocarbon equivalent (or OMNMHCE) for methanol-fueled vehicles means the sum of the carbon mass contribution of non-oxygenated hydrocarbons (excluding methane), methanol, and formaldehyde as contained in a gas sample, expressed as gasoline-fueled hydrocarbons. For ethanol-fueled vehicles, organic material non-methane hydrocarbon equivalent (OMNMHCE) means the sum of carbon mass contribution of non-oxygenated hydrocarbons (excluding methane), methanol, ethanol, formaldehyde and acetaldehyde as contained in a gas sample, expressed as gasoline-fueled hydrocarbons.

Ozone deterioration factor means a factor applied to the mass of NMOG emissions from TLEVs, LEVs, or ULEVs which accounts for changes in the ozone-forming potential of the NMOG emissions from a vehicle as it accumulates mileage.

Ozone Transport Commission States or OTC States means the States of Connecticut, Delaware, Maine, Maryland, Massachusetts, New Hampshire, New

Jersey, New York, Pennsylvania, Rhode Island, Vermont and Virginia, and the District of Columbia.

Parallel hybrid electric vehicle means any vehicle which allows power to be delivered to the driven wheels by either a combustion engine and/or by a battery powered electric motor.

Periodically regenerating trap oxidizer system means a trap oxidizer system that utilizes, during normal driving conditions for cleaning the trap, an automated regeneration mode which can be easily detected.

Point of first sale is the location where the completed light-duty vehicle or light-duty truck is purchased, also known as the final product purchase location. The point of first sale may be a retail customer, dealer, distributor, fleet operator, broker, secondary manufacturer, or any other entity which comprises the point of first sale. In cases where the end user purchases the completed vehicle directly from the manufacturer, the end user is the point of first sale.

Production is the number of vehicles and/or trucks that a manufacturer produces in a given model year that are subject to the provisions of this subpart and are included in the same averaging set.

Reactivity adjustment factor means a fraction applied to the mass of NMOG emission from a vehicle powered by a fuel other than conventional gasoline for the purpose of determining a gasoline-equivalent NMOG emission value. The reactivity adjustment factor is defined as the ozone-forming potential of the exhaust from a vehicle powered by a fuel other than conventional gasoline divided by the ozone-forming potential of conventional gasoline vehicle exhaust.

Regeneration means the process of oxidizing accumulated particulate matter. It may occur continually or periodically.

Regeneration emission test means a complete emission test which includes a regeneration.

Regeneration interval means the interval from the start of a regeneration to the start of the next regeneration.

Section 177 Program means State regulations or other laws, except ZEV Mandates, that apply to any of the following categories of motor vehicles: Passenger cars, light-duty trucks up through 6,000 pounds GVWR, and medium-duty vehicles from 6,001 to 14,000 pounds GVWR if designed to operate on gasoline, as these categories of motor vehicles are defined in the California Code of Regulations, Title 13, Division 3, Chapter 1, Article 1, Section 1900.

Series hybrid electric vehicle means any vehicle which allows power to be delivered to the driven wheels solely by a battery powered electric motor, but which also incorporates the use of a combustion engine to provide power to the battery and/or electric motor.

37 States is the trading region comprised of the United States excluding California and the Northeast Trading Region.

Transitional low emission vehicle (TLEV) means any vehicle certified to the transitional low emission vehicle standards specified in this subpart.

Trap oxidizer system means an emission control system which consists of a trap to collect particulate matter and a mechanism to oxidize the accumulated particulate.

Type A hybrid electric vehicle means an HEV which achieves a minimum range of 60 miles over the All-Electric Range Test as defined in § 86.1770.

Type B hybrid electric vehicle means an HEV which achieves a range of 40–59 miles over the All-Electric Range Test as defined in § 86.1770.

Type C hybrid electric vehicle means an HEV which achieves a range of 0–39 miles over the All-Electric Range test and all other HEVs excluding ''Type A'' and ''Type B'' HEVs as defined in § 86.1770.

Ultra-low emission vehicle (ULEV) means any vehicle certified to the ultra-low emission vehicle standards specified in this subpart.

Zero-emission vehicle (ZEV) means any vehicle which is certified to produce zero emissions of any criteria pollutants under any and all possible operational modes and conditions. Incorporation of a fuel fired heater shall not preclude a vehicle from being certified as a ZEV provided the fuel fired heater cannot be operated at ambient temperatures above 40 degrees Fahrenheit and the heater is demonstrated to have zero evaporative emissions under any

and all possible operational modes and conditions.

ZEV Mandate means any state regulation or other law that imposes (or purports to impose) obligations on auto manufacturers to produce, deliver for sale, or sell a certain number or percentage of ZEVs.

[62 FR 31242, June 6, 1997. Redesignated and amended at 63 FR 966, Jan. 7, 1998]

§ 86.1703–99 Abbreviations.

(a) The abbreviations in subpart A of this part apply to this subpart.

(b) In addition, the following abbreviations shall apply to this subpart:

ASTR—All States Trading Region
HEV—hybrid electric vehicle.
LEV—low emission vehicle.
NMOG—non-methane organic gases.
NTR—Northeast Trading Region.
OTC—Ozone Transport Commission
TLEV—transitional low emission vehicle.
ULEV—ultra low emission vehicle.
ZEV—zero emission vehicle.

[62 FR 31242, June 6, 1997. Redesignated and amended at 63 FR 967, Jan. 7, 1998]

§ 86.1704–99 Section numbering; construction.

(a) The model year of initial applicability is indicated by the last two digits of the six-digit group of the section number. A section remains in effect for subsequent model years until it is superseded.

(b) A section reference without a model year suffix shall be interpreted to be a reference to the section applicable to the appropriate model year.

[62 FR 31242, June 6, 1997. Redesignated at 63 FR 967, Jan. 7, 1998]

§ 86.1705–99 General provisions; opt-in.

(a) *Covered manufacturers.* Covered manufacturers must comply with the provisions in this subpart, and in addition, must comply with the requirements of 40 CFR parts 85 and 86. A manufacturer shall be a covered manufacturer if:

(1) The manufacturer (or, in the case of joint ventures or similar cooperative arrangements between two or more manufacturers, the participating manufacturers) has opted into the program pursuant to paragraph (c) of this section;

(2) Where a manufacturer has included a condition on opt-in provided for in paragraph (c)(2) of this section, that condition has been satisfied; and

(3) The manufacturer has not opted out, pursuant to § 86.1707, or the manufacturer has opted out but that opt-out has not become effective under § 86.1707.

(b) Covered manufacturers must comply with the standards and requirements specified in this subpart beginning in model year 1999. A manufacturer not listed in § 86.1706(c) that opts into the program after EPA issues a finding pursuant to § 86.1706(b) that the program is in effect must comply with the standards and requirements of this subpart beginning in the model year named for the calendar year after the calendar year in which EPA receives the manufacturer's opt-in. Light-duty vehicles and light light-duty trucks sold by covered manufacturers must comply with the provisions of this subpart.

(c) *Manufacturer opt-ins.* (1) To opt into the National LEV program, a motor vehicle manufacturer must submit a written opt-in notification to the Administrator signed by a person or entity within the corporation or business with authority to bind the corporation or business to its election and holding the position of vice president for environmental affairs or a position of comparable or greater authority. The manufacturer shall send a copy of this notification to : Director, Vehicles Programs and Compliance Division; U.S. Environmental Protection Agency; 2565 Plymouth Road; Ann Arbor, Michigan, 48105. The notification must unambiguously and unconditionally (apart from the permissible conditions specified in paragraph (c)(2) of this section) indicate the manufacturer's agreement to opt into the program and be subject to the provisions in this subpart, and include the following language:

XX COMPANY, its subsidiaries, successors and assigns hereby opts into the voluntary National LEV program, as set forth in 40 CFR part 86, subpart R, and agrees to be legally bound by all of the standards, requirements and other provisions of the National LEV program. XX COMPANY commits not to challenge EPA's authority to establish or

enforce the National LEV program, and commits not to seek to certify any vehicle except in compliance with the regulations in subpart R.

(2) The opt-in notification may indicate that the manufacturer opts into the program subject to either or both of the following conditions:

(i) That the Administrator finds under §86.1706 that the National LEV program is in effect, to be indicated with the following language:

This opt-in is subject to the condition that the Administrator make a finding pursuant to 40 CFR 86.1706 that the National LEV program is in effect.

(ii) That certain states (limited to the OTC States) and/or motor vehicle manufacturers opt into National LEV pursuant to §86.1705, to be indicated with the following language (language in brackets indicates that either or both formulations are acceptable):

This opt-in is subject to the condition that [each of the states of [list state names]/[and] each of the following manufacturers [list manufacturer names]] opt into National LEV pursuant to 40 CFR 86.1705.

(3) A manufacturer shall be considered to have opted in upon the Administrator's receipt of the opt-in notification and satisfaction of the conditions set forth in paragraph (c)(2) of this section, if applicable.

(d) *Covered states.* An OTC State shall be a covered state if:

(1) The state has opted into National LEV pursuant to paragraph (e) of this section;

(2) Where a state has included a condition on opt-in provided for in paragraph (e)(3)(viii) of this section, that condition has been satisfied; and

(3) The state has not opted out, pursuant to §86.1707, or the state has opted out but that opt-out has not become effective under §86.1707.

(e) *OTC State opt-ins.* To opt into the National LEV program, a state must submit an opt-in notification to the Administrator, with a copy to Director, Vehicle Programs and Compliance Division; U.S. Environmental Protection Agency; 2565 Plymouth Road; Ann Arbor, Michigan, 48105. The notification must contain the following or substantively identical language:

(1)(i) An Executive Order signed by the governor of the state (or the mayor of the District of Columbia) that unambiguously and unconditionally (apart from the permissible conditions set forth in this section) indicates the state's agreement to opt into the National LEV program and includes the following language (language in brackets indicates that either formulation is acceptable):

This Executive Order [commits STATE to/opts STATE into] the National Low Emission Vehicle (National LEV) program, in accordance with the EPA National LEV program regulations at 40 CFR part 86, subpart R.

I hereby direct HEAD OF APPROPRIATE STATE AGENCY to forward to EPA with my concurrence the [enclosed letter signed/enclosed letter and proposed regulations signed and proposed] by the HEAD OF APPROPRIATE STATE AGENCY, which [specifies/specify] the details of STATE's commitment to the National LEV program.

I hereby direct APPROPRIATE STATE AGENCY to follow the procedures prescribed by the general statutes of STATE to take the necessary steps to adopt regulations and submit a state implementation plan (SIP) revision committing STATE to National LEV in accordance with the EPA National LEV program regulations on SIP revisions at 40 CFR part 86, subpart R, and with section 110 of the Clean Air Act and its implementing regulations at 40 CFR parts 51 and 52.

(ii) States with Existing ZEV Mandates may add language to the Executive Order submitted pursuant to this paragraph (e)(1) confirming that this opt-in will not affect the state's requirements pertaining to ZEVs.

(2)(i) If a state does not submit an Executive Order pursuant to paragraph (e)(1) of this section, a letter signed by the governor of the state (or the mayor of the District of Columbia) that unambiguously and unconditionally (apart from the permissible conditions set forth in this section) indicates the state's agreement to opt into the National LEV program and includes the following language (language in brackets indicates that either formulation is acceptable):

This submittal is made in accordance with the EPA National Low Emission Vehicle (National LEV) regulations at 40 CFR part 86, subpart R to [commit STATE to/opt STATE into] the National LEV program.

[I am forwarding to EPA the [enclosed letter signed enclosed letter and proposed regulations which were signed and proposed] by HEAD OF APPROPRIATE STATE AGENCY at my direction, and which [specifies/specify] the details of STATE's commitment to the National LEV program. I am forwarding to EPA and concur with the [enclosed letter signed/enclosed letter and proposed regulations signed and proposed] by HEAD OF APPROPRIATE STATE AGENCY, which [specifies/specify] the details of STATE's commitment to the National LEV program.]

I [hereby direct/have directed] APPROPRIATE STATE AGENCY to follow the procedures prescribed by the general statutes of STATE to take the necessary steps to adopt regulations and submit a state implementation plan (SIP) revision committing STATE to National LEV in accordance with the EPA National LEV regulations on SIP revisions at 40 CFR part 86, subpart R, and with section 110 of the Clean Air Act and its implementing regulations at 40 CFR parts 51 and 52.

(ii) States with Existing ZEV Mandates may add language to the letter submitted pursuant to this paragraph (e)(2) confirming that this opt-in will not affect the state's requirements pertaining to ZEVs.

(3) A letter signed by the head of the appropriate state agency that would unconditionally (except as set forth in this section) include the following:

(i) States without a Section 177 Program, or with a Section 177 Program but not an Existing ZEV Mandate, shall include the following language:

National LEV is designed as a compliance alternative for OTC State programs adopted pursuant to section 177 of the Clean Air Act that apply to passenger cars, light-duty trucks up through 6,000 pounds GVWR, and/or medium-duty vehicles from 6,001 to 14,000 pounds GVWR if designed to operate on gasoline, as these categories of motor vehicles are defined in the California Code of Regulations, Title 13, Division 3, Chapter 1, Article 1, Section 1900. For the duration of STATE's participation in National LEV, [STATE will allow manufacturers to / manufacturers may] comply with National LEV or equally stringent mandatory Federal standards in lieu of compliance with any program adopted by STATE pursuant to the authority provided in section 177 of the Clean Air Act applicable to the vehicle classes specified above, including any ZEV mandates. STATE's participation in National LEV extends until model year 2006, except as provided in 40 CFR 86.1707. If, no later than December 15, 2000, the US EPA does not adopt standards at least as stringent as the National LEV standards provided in 40 CFR part 86 subpart R that apply to new motor vehicles in model year 2004, 2005 or 2006, STATE's participation in National LEV extends only until model year 2004, except as provided in 40 CFR 86.1707.

For the duration of STATE's participation in National LEV, STATE [intends to/will] forbear from adopting and implementing a ZEV mandate effective before model year 2006.

(ii) States with a Section 177 Program and an Existing ZEV Mandate, shall include the following language:

National LEV is designed as a compliance alternative for OTC State programs adopted pursuant to section 177 of the Clean Air Act that apply to passenger cars, light-duty trucks up through 6,000 pounds GVWR, and medium-duty vehicles from 6,001 to 14,000 pounds GVWR if designed to operate on gasoline, as these categories of motor vehicles are defined in the California Code of Regulations, Title 13, Division 3, Chapter 1, Article 1, Section 1900. With the exception of any requirements pertaining to ZEVs, for the duration of STATE's participation in National LEV, [STATE will allow manufacturers to / manufacturers may] comply with National LEV or equally stringent mandatory Federal standards in lieu of compliance with any program adopted by STATE pursuant to the authority provided in section 177 of the Clean Air Act applicable to the vehicle classes specified above. STATE's participation in National LEV extends until model year 2006, except as provided in 40 CFR 86.1707. If, no later than December 15, 2000, the US EPA does not adopt standards at least as stringent as the National LEV standards provided in 40 CFR part 86 subpart R that apply to new motor vehicles in model year 2004, 2005 or 2006, STATE's participation in National LEV extends only until model year 2004, except as provided in 40 CFR 86.1707. Any existing or future requirement pertaining to ZEVs is not affected by STATE's acceptance of National LEV as a compliance alternative for other state requirements.

(iii) All states shall include the following language:

Based on EPA's determination in the preamble to the final National LEV rule [CITE], STATE believes that National LEV will achieve reductions of VOC and NO_X emissions that are equivalent to or greater than the reductions that would be achieved through OTC State adoption of California Low Emission Vehicle programs in the Ozone Transport Region.

(iv) All states shall include the following language:

STATE intends National LEV to be STATE's new motor vehicle emissions control program.

(v) All states shall include the following language:

STATE recognizes that motor vehicle manufacturers are committing to National LEV with the expectation that, until model year 2006 (or, under the circumstances specified above, model year 2004), the OTC States that commit to the National LEV program will allow National LEV as a compliance alternative for state programs adopted pursuant to the authority provided in section 177 of the Clean Air Act, applying to the vehicle classes specified above (except any requirements pertaining to ZEVs in states with Existing ZEV Mandates). It is our intent to abide by this commitment. [However, the provisions of this letter will not have the force of law until STATE adopts them as state regulations. / Regulations providing for STATE's opt-in to National LEV have been approved for proposed rulemaking by APPROPRIATE STATE AGENCY on [INSERT DATE]. However, they will not have the force and effect of law until they are approved as final regulations.] Adoption of state regulations and the contents of a final state implementation plan revision will be determined through a state rulemaking process pursuant to the state requirements at [CITE to STATE law] and Federal law. Also, STATE must comply with any subsequent STATE legislation that might affect this commitment.

(vi) All states shall include the following language:

If the manufacturers exit the National LEV program pursuant to the EPA National LEV regulations at 40 CFR 86.1707, STATE [acknowledges / provides in its proposed rule] that the transition from National LEV requirements to any STATE program adopted pursuant to the authority provided in section 177 of the Clean Air Act applying to the vehicle classes specified above, including any requirements pertaining to ZEVs (except any requirements pertaining to ZEVs in states with Existing ZEV Mandates), will proceed in accordance with the EPA National LEV regulations at 40 CFR 86.1707.

(vii) All states shall include the following language:

STATE supports the legitimacy of the National LEV program and EPA's authority to promulgate the National LEV regulations.

(viii) Any state may include the following language:

[This [commitment/opt-in] / As provided in the proposed regulations, STATE's opt-in] is conditioned on all motor vehicle manufacturers (listed in EPA regulations at 40 CFR 86.1706(c)) opting into National LEV and on EPA finding that National LEV is in effect pursuant to 40 CFR 86.1706.

(4) In lieu of statements described in paragraphs (e)(3)(i), (e)(3)(ii) and (e)(3)(vi) of this section, states may submit proposed regulations containing the provisions required under paragraphs (g)(1), (g)(2), (g)(3), and (g)(5) of this section.

(f) A state shall be considered to have opted in upon the Administrator's receipt of the opt-in notification and satisfaction of the conditions set forth in paragraph (e)(3)(viii) of this section, if applicable.

(g) Each OTC State that opts into National LEV pursuant to paragraph (e) of this section shall submit a state implementation plan (SIP) revision within one year and seventy-five days of December 16, 1997 except for the District of Columbia, New Hampshire, Delaware, and Virginia, for which the deadline is 18 months and seventy-five days from December 16, 1997. The SIP revisions shall include the following using identical or substantively identical language:

(1) Covered states without any Section 177 Program, or with a Section 177 Program but not an Existing ZEV Mandate, shall submit regulations containing the following language:

For the duration of STATE's participation in National LEV, manufacturers may comply with National LEV or equally stringent mandatory Federal standards in lieu of compliance with any program, including any mandates for sales of zero emission vehicles (ZEVs), adopted by STATE pursuant to the authority provided in section 177 of the Clean Air Act applicable to passenger cars, light-duty trucks up through 6,000 pounds GVWR, and/or medium-duty vehicles from 6,001 to 14,000 pounds GVWR if designed to operate on gasoline, as these categories of motor vehicles are defined in the California Code of Regulations, Title 13, Division 3, Chapter 1, Article 1, Section 1900.

STATE's participation in National LEV extends until model year 2006, except as provided in 40 CFR 86.1707. If, no later than December 15, 2000, the US EPA does not adopt standards at least as stringent as the National LEV standards provided in 40 CFR part 86 subpart R that apply to new motor vehicles in model year 2004, 2005 or 2006,

STATE's participation in National LEV extends only until model year 2004, except as provided in 40 CFR 86.1707.

(2) Covered states with a Section 177 Program and an Existing ZEV Mandate shall submit regulations containing the following language:

With the exception of any STATE requirements pertaining to zero emission vehicles (ZEVs), for the duration of STATE's participation in National LEV, manufacturers may comply with National LEV or equally stringent mandatory Federal standards in lieu of compliance with any program adopted by STATE pursuant to the authority provided in section 177 of the Clean Air Act applicable to passenger cars, light-duty trucks up through 6,000 pounds GVWR, and/or medium-duty vehicles from 6,001 to 14,000 pounds GVWR if designed to operate on gasoline, as these categories of motor vehicles are defined in the California Code of Regulations, Title 13, Division 3, Chapter 1, Article 1, Section 1900.

STATE's participation in National LEV extends until model year 2006, except as provided in 40 CFR 86.1707. If, no later than December 15, 2000, the US EPA does not adopt standards at least as stringent as the National LEV standards provided in 40 CFR part 86 subpart R that apply to new motor vehicles in model year 2004, 2005 or 2006, STATE's participation in National LEV extends only until model year 2004, except as provided in 40 CFR 86.1707.

Any existing or future STATE requirement pertaining to ZEVs is not affected by STATE's acceptance of National LEV as a compliance alternative for other state requirements.

(3) All covered states shall submit regulations containing the following language:

If a covered manufacturer, as defined at 40 CFR 86.1702, opts out of the National LEV program pursuant to the EPA National LEV regulations at 40 CFR 86.1707, the transition from National LEV requirements to any STATE section 177 program applicable to passenger cars, light-duty trucks up through 6,000 pounds GVWR, and/ or medium-duty vehicles from 6,001 to 14,000 pounds GVWR if designed to operate on gasoline, as these categories of motor vehicles are defined in the California Code of Regulations, Title 13, Division 3, Chapter 1, Article 1, Section 1900, will proceed in accordance with the EPA National LEV regulations at 40 CFR 86.1707.

(4) All covered states shall accompany the regulatory language with the following language:

STATE commits to support National LEV as an acceptable alternative to state Section 177 Programs for the duration of STATE's participation in National LEV.

STATE recognizes that its commitment to National LEV is necessary to ensure that National LEV remain in effect.

STATE is submitting this SIP revision in accordance with the applicable Clean Air Act requirements at section 110 and EPA regulations at 40 CFR part 86 and 40 CFR Parts 51 and 52.

(5) States without Existing ZEV Mandates shall accompany the regulatory language with the following language:

For the duration of STATE's participation in National LEV, STATE [intends to / will] forbear from adopting and implementing a ZEV mandate effective prior to model year 2006. Notwithstanding the previous sentence, if, no later than December 15, 2000, the US EPA does not adopt standards at least as stringent as the National LEV standards provided in 40 CFR part 86 subpart R that apply to new motor vehicles in model year 2004, 2005 or 2006, STATE [intends to / will] forbear from adopting and implementing a ZEV mandate effective prior to model year 2004.

[62 FR 31242, June 6, 1997. Redesignated and amended at 63 FR 967, Jan. 7, 1998]

§ 86.1706–99 National LEV program in effect.

(a) No later than March 2, 1998, EPA shall issue a finding as to whether National LEV is in effect. EPA shall base this finding on opt-in notifications from OTC States submitted pursuant to § 86.1705(e) and received by EPA January 30, 1998, and on opt-in notifications from manufacturers submitted pursuant to § 86.1705(c) and received by EPA February 17, 1998.

(b) EPA shall find that the National LEV program is in effect and shall subsequently publish this determination if the following conditions have been met:

(1) All manufacturers listed in paragraph (c) of this section have lawfully opted in pursuant to § 86.1705(c) and any conditions placed on the opt-ins allowed under § 86.1705(c)(2) have been met (apart from a condition that EPA find the National LEV program in effect);

(2) Each OTC State that opts in has lawfully opted in pursuant to § 86.1705(e) and any conditions placed on opt-ins by OTC States that are allowed

under §86.1705(e)(3)(viii) have been met (apart from a condition that EPA find the National LEV program in effect); and

(3) No valid opt-out has become effective pursuant to §86.1707.

(c) List of manufacturers of light-duty vehicles and light-duty trucks:

American Honda Motor Company, Inc.
American Suzuki Motor Corporation
BMW of North America, Inc.
Chrysler Corporation
Fiat Auto U.S.A., Inc.
Ford Motor Company
General Motors Corporation
Hyundai Motor America
Isuzu Motors America, Inc.
Jaguar Motors Ltd.
Kia Motors America, Inc.
Land Rover North America, Inc.
Mazda (North America) Inc.
Mercedes-Benz of North America
Mitsubishi Motor Sales of America, Inc.
Nissan North America, Inc.
Porsche Cars of North America, Inc.
Rolls-Royce Motor Cars Inc.
Saab Cars USA, Inc.
Subaru of America, Inc.
Toyota Motor Sales, U.S.A., Inc.
Volkswagen of America, Inc.
Volvo North America Corporation

[63 FR 969, Jan. 7, 1998]

§86.1707–99 General provisions; opt-outs.

A covered manufacturer or covered state may opt out of the National LEV program only according to the provisions of this section. Vehicles certified under the National LEV program must continue to meet the standards to which they were certified, regardless of whether the manufacturer of those vehicles remains a covered manufacturer. A manufacturer that has opted out remains responsible for any debits outstanding on the effective date of opt-out, pursuant to §86.1710(d)(3).

(a) *Procedures for opt-outs—manufacturers.* To opt out of the National LEV program, a covered manufacturer must notify the Administrator as provided in §86.1705(c)(1), except that the notification shall specify the condition and final action allowing opt-out, indicate the manufacturer's intent to opt out of the program and no longer be subject to the provisions in this subpart, and specify an effective date for the opt-out. The effective date shall be specified in terms of the first model year for which the opt-out shall be effective, but shall be no earlier than the applicable date indicated in paragraphs (d) through (j) of this section. For an opt-out pursuant to paragraph (d) of this section, the manufacturer shall specify the revision triggering the opt-out and shall also provide evidence that the triggering revision does not harmonize the standard or requirement with a comparable California standard or requirement, if applicable, or that the triggering revision has increased the stringency of the revised standard or requirement, if applicable. The notification shall include the following language:

XX COMPANY, its subsidiaries, successors and assigns hereby opt out of the voluntary National LEV program, as set forth in 40 CFR part 86, subpart R.

(b) *Procedures for opt-outs—OTC states.* To opt out of the National LEV program, a covered state must notify the Administrator through a written statement from the head of the appropriate state agency. A copy of the notification shall be sent to the Director, Vehicle Programs and Compliance Division; U.S. Environmental Protection Agency; 2565 Plymouth Road; Ann Arbor, Michigan, 48105. The notification shall specify the final action allowing opt-out, indicate the state's intent to opt out of the program and no longer be subject to the provisions in this subpart, and specify an effective date for the opt-out. The effective date shall be specified in terms of the first model year for which the opt-out shall be effective, but shall be no earlier than the applicable date indicated in paragraphs (d) through (k) of this section. The notification shall include the following language:

STATE hereby opts out of the voluntary National LEV program, as set forth in 40 CFR part 86, subpart R.

(c) *Procedures for opt-outs—EPA notification.* Upon receipt of an opt-out notification under this section, EPA shall promptly notify the covered states and covered manufacturers of the opt-out. Publication in the FEDERAL REGISTER of notice of receipt of the opt-out notification is sufficient but not necessary to meet EPA's obligation to notify covered states and covered manufacturers.

(d) *Conditions allowing manufacturer opt-outs—change to Stable Standards.* A covered manufacturer may opt out if EPA promulgates a final rule or takes other final agency action making a revision not specified in paragraph (d)(9)(iii) of this section to a standard or requirement listed in paragraph (d)(9)(i) of this section and the covered manufacturer objects to the revision.

(1) A covered manufacturer may opt out within 180 calendar days of the EPA action allowing opt-out under this paragraph (d). A valid opt-out based on a revision to a Core Stable Standard shall be effective no earlier than the model year named for the calendar year following the calendar year in which EPA receives the manufacturer's opt-out notification. A valid opt-out based on a revision to a Non-Core Stable Standard may become effective no earlier than the first model year to which that revision applies.

(i) Only a covered manufacturer that objects to a revision may opt out if EPA adopts that revision, except that if such a manufacturer opts out, other manufacturers that did not object to the revision may also opt out pursuant to paragraph (j) of this section. An objection shall be sufficient for this purpose only if it was filed during the public comment period on the proposed revision and the objection states that the proposed revision is sufficiently significant to allow opt-out under this paragraph (d).

(ii) [Reserved]

(2) Within sixty days of receipt of an opt-out notification under this paragraph (d), EPA shall determine whether the opt-out is valid by determining whether the alleged condition allowing opt-out has occurred and whether the opt-out complies with the requirements under paragraphs (a) and (d) of this section. An EPA determination regarding the validity of an opt-out is not a rule, but is a nationally applicable final agency action subject to judicial review pursuant to section 307(b) of the Clean Air Act (42 U.S.C. 7607(b)).

(3) A manufacturer that has submitted an opt-out notification to EPA under this paragraph (d) remains a covered manufacturer until the opt-out has come into effect under paragraph (d)(1) of this section and EPA or a reviewing court determines that the opt-out is valid.

(4) In the event that a manufacturer petitions for judicial review of an EPA determination that an opt-out is invalid, the manufacturer remains a covered manufacturer until final judicial resolution of the petition. Pending resolution of the petition, and starting with the model year for which the opt-out would have come into effect under paragraph (d)(1) of this section if EPA had determined the opt-out was valid, the manufacturer may certify vehicles to any standards in this part applicable to vehicles certified in that model year and sell such vehicles without regard to the limitations contained in § 86.1711. However, if the opt-out is finally determined to be invalid, the manufacturer will be liable for any failure to comply with §§ 86.1710 through 86.1712.

(5) Upon the effective date of a manufacturer's opt-out under this paragraph (d), that manufacturer shall be subject to all requirements (except ZEV Mandates) that would apply to a manufacturer that had not opted into the National LEV program, including all applicable standards and other requirements promulgated under title II of the Clean Air Act (42 U.S.C. 7521 *et seq.*) and any state standards and other requirements (except ZEV Mandates) in effect pursuant to section 177 of the Clean Air Act (42 U.S.C. 7507). For any state Section 177 Program that allowed National LEV as a compliance alternative and was adopted at least two years before the effective date of a manufacturer's opt-out, a manufacturer waives its right under section 177 of the Clean Air Act to two years of lead time to the extent that the effective date of its opt-out provides for less than two years of lead time and to the extent such a waiver is necessary. With respect to ZEV Mandates, the manufacturer will not be deemed to have waived its two-year lead time under section 177 of the Clean Air Act. A manufacturer shall not be subject to any ZEV Mandates (except Existing ZEV Mandates) in OTC States until the model year (as defined in part 85, subpart X) that commences two years after the date of EPA's receipt of the manufacturer's opt-out notice.

(6) If a covered manufacturer opts out under this paragraph (d), any covered state that is not a violating state under paragraph (e), (f), (g) or (h) of this section may opt out within 90 calendar days of the date of either an EPA finding that the opt-out is valid, or a judicial ruling that a disputed opt-out is valid. The state's opt-out notification shall specify an effective date for the state's opt-out no earlier than two calendar years after the date of EPA's receipt of the state's opt-out notification and shall provide that the opt out is not effective for model years (as defined in part 85, subpart X) that commence prior to this effective date.

(7) In a state that opts out pursuant to paragraph (d)(6) of this section, obligations under National LEV shall be unaffected for covered manufacturers until the effective date of the state's opt-out. Upon the effective date of the state's opt-out, in that state covered manufacturers shall comply with any state standards and other requirements in effect pursuant to section 177 of the Clean Air Act or, if such state standards are not in effect, with all requirements that would apply to a manufacturer that had not opted into the National LEV program, including all applicable standards and other requirements promulgated under title II of the Clean Air Act (42 U.S.C. 7521 *et seq.*).

(8) In a state that has not opted out, obligations under National LEV shall be unaffected for covered manufacturers.

(9)(i) The following are the emissions standards and requirements that, if revised, may provide covered manufacturers the opportunity to opt out pursuant to paragraph (d)(1) of this section:

(A) The tailpipe emissions standards for NMOG, NO_x, CO, HCHO, and PM specified in § 86.1708(b) and (c) and § 86.1709(b) and (c);

(B) Fleet average NMOG standards and averaging, banking and trading provisions specified in § 86.1710;

(C) Provisions regarding limitations on sale of Tier 1 vehicles and TLEVs contained in § 86.1711;

(D) The compliance test procedure (Federal Test Procedure) as specified in subparts A and B of this part, as used for determining compliance with the exhaust emission standards specified in § 86.1708(b) and (c) and § 86.1709(b) and (c);

(E) The compliance test fuel, as specified in § 86.1771;

(F) The definition of low volume manufacturer specified in § 86.1702;

(G) The on-board diagnostic system requirements specified in § 86.1717;

(H) The light-duty vehicle refueling emissions standards and provisions specified in § 86.099–8(d), and the light-duty truck refueling emissions standards and provisions specified in § 86.001–9(d);

(I) The cold temperature carbon monoxide standards and provisions for light-duty vehicles specified in § 86.099–8(k), and for light light-duty trucks specified in § 86.099–9(k);

(J) The evaporative emissions standards and provisions for light-duty vehicles specified in § 86.099–8(b), and the evaporative emissions standards and provisions for light light-duty trucks specified in § 86.099–9(b);

(K) The reactivity adjustment factors and procedures specified in § 86.1777(d);

(L) The Supplemental Federal Test Procedure, standards and phase-in schedules specified in §§ 86.1708(e), 86.1709(e), 86.127(f) and (g), 86.129(e) and (f), 86.130(e), 86.131(f), 86.132(n) and (o), 86.158, 86.159, 86.160, 86.161, 86.162, 86.163, 86.164, and Appendix I to this part, paragraphs (g) and (h).

(ii) The standards and requirements listed in paragraphs (d)(9)(i)(A) through (d)(9)(i)(F) of this section are the ''Core Stable Standards''; the standards and requirements listed in paragraphs (d)(9)(i)(G) through (d)(9)(i)(L) of this section are the ''Non-Core Stable Standards.''

(iii) The following types of revisions to the Stable Standards listed in paragraph (d)(9)(i) of this section do not provide covered manufacturers the right to opt out of the National LEV program:

(A) Revisions to which covered manufacturers do not object;

(B) Revisions to a Non-Core Stable Standard that do not increase the overall stringency of the standard or requirement;

(C) Revisions to a Non-Core Stable Standard that harmonize the standard or requirement with the comparable

California standard or requirement for the same model year (even if the harmonization increases the stringency of the standard or requirement), provided that, if the relevant California factor is raised to 1.0 or higher, EPA can only raise to 1.0 any of the reactivity adjustment factors specified in 86.1777 applicable to gasoline meeting the specifications of 86.1771(a)(1); and

(D) Revisions to cold temperature carbon monoxide standards and provisions for light-duty vehicles (as specified in § 86.099–8(k)) and for light light-duty trucks (as specified in § 86.099–9(k)) that are effective after model year 2000.

(10) Promulgation by EPA of mandatory tailpipe standards and other related requirements effective model year 2004 or later does not provide an opportunity to opt out of the National LEV program.

(e) *Conditions allowing manufacturer opt-outs—state Section 177 Program that does not allow National LEV as a compliance alternative.* A covered manufacturer may opt out of National LEV if a covered state takes final action such that it has in its regulations or state law a state Section 177 Program and/or a ZEV Mandate (except in a state with an Existing ZEV Mandate), that does not allow National LEV as a compliance alternative for the duration of the state's commitment to the National LEV program. The state's commitment to National LEV extends until model year 2006. If, no later than December 15, 2000, EPA has not adopted standards at least as stringent as the National LEV standards provided in 40 CFR part 86, subpart R that apply to new motor vehicles in model year 2004, 2005 or 2006, the state's commitment to National LEV only extends until model year 2004. A manufacturer could opt out based on this condition even if the state regulations or law are contrary to an approved SIP revision committing the state to National LEV pursuant to § 86.1705(g). For purposes of this paragraph (e), such a state shall be called the ''violating state.''

(1) A covered manufacturer may opt out any time after the violating state takes such final action, provided that the violating state has not withdrawn or otherwise nullified the relevant final action prior to EPA's receipt of the opt-out notification. An opt-out under this paragraph (e) shall be effective no earlier than the model year named for the calendar year following the calendar year in which EPA receives the manufacturer's opt-out notification.

(2) As of the model year named for the calendar year following the calendar year of the violating state's final action, the violating state shall no longer be included in the applicable trading region for purposes of calculating covered manufacturers' compliance with the fleet average NMOG standards under § 86.1710, and § 86.1711 shall no longer apply to vehicles sold in the violating state. Beginning in that model year and until the violating state's requirements become effective pursuant to sections 110(l) and 177 of the Clean Air Act or until the date specified in the following sentence, whichever is earlier, the National LEV program allows covered manufacturers to certify and produce for sale vehicles meeting the exhaust emission standards of § 86.096–8(a)(1)(i) and subsequent model year provisions or § 86.097–9(a)(1)(i) and subsequent model year provisions in the violating state. If the violating state withdraws or otherwise nullifies the relevant violating final action, vehicles sold in that state shall count towards the covered manufacturers' fleet NMOG standards under § 86.1710 and be subject to § 86.1711 as of the model year named for the second calendar year following the calendar year in which the violating state took the final action nullifying or withdrawing the final violating action, or as of the model year named for the fourth calendar year following the calendar year in which the violating state took the violating final action, whichever is later. The two-year lead time required by section 177 of the Clean Air Act for the state Section 177 Program or ZEV Mandate shall run from the date of the violating final action. Notwithstanding an earlier effective date of a manufacturer's opt-out under this paragraph (e), the manufacturer's opt-out is not effective in the violating state until the two-year lead time for the violating state's program has passed (which shall run from the date of the violating final action).

For model years for which vehicles sold in the violating state do not count towards the National LEV NMOG average, in calculating emissions reductions from new motor vehicles creditable for state implementation plan requirements, the violating state's emissions reductions shall be based on the emission standards of §§ 86.096—8(a)(1)(i), 86.097–9(a)(1)(i) and subsequent model year provisions, and shall not be based on the National LEV standards, provided that vehicles sold in the violating state are certified to Tier 1 levels when sold in that state.

(3) Upon the effective date of a manufacturer's opt-out under this paragraph (e) in any covered state that is not a violating state under this paragraph (e), that manufacturer shall be subject to all requirements (except ZEV Mandates) that would apply to a manufacturer that had not opted into the National LEV program, including all applicable standards and other requirements promulgated under title II of the Clean Air Act and any state standards and other requirements (except ZEV Mandates) in effect pursuant to section 177 of the Clean Air Act (42 U.S.C. 7507). For any state Section 177 Program that allowed National LEV as a compliance alternative and was adopted by a non-violating state at least two years before the effective date of a manufacturer's opt-out, a manufacturer waives its right under section 177 of the Clean Air Act to two years of lead time to the extent that the effective date of its opt-out provides for less than two years of lead time and to the extent such a waiver is necessary. With respect to ZEV Mandates, the manufacturer will not be deemed to have waived its two-year lead time under section 177 of the Clean Air Act. A manufacturer shall not be subject to any ZEV Mandates (except Existing ZEV Mandates) in OTC States until the model year (as defined in part 85, subpart X) that commences two years after the date of EPA's receipt of the manufacturer's opt-out notice.

(4) If a covered manufacturer opts out under this paragraph (e), any covered state that is not a violating state under paragraph (e), (f), (g) or (h) of this section may opt out within 90 calendar days of EPA's receipt of the manufacturer's opt-out notification. The state's opt-out notification shall specify an effective date for the state's opt-out no earlier than two calendar years after the date of EPA's receipt of the state's opt-out notification and shall provide that the opt-out is not effective for model years (as defined in part 85, subpart X), that commence prior to this effective date.

(5) In a non-violating state that opts out pursuant to paragraph (e)(4) of this section, obligations under National LEV shall be unaffected for covered manufacturers until the effective date of the non-violating state's opt-out. Upon the effective date of the state's opt-out, in that state covered manufacturers shall comply with any state standards and other requirements in effect pursuant to section 177 of the Clean Air Act or, if such state standards are not in effect, with all requirements that would apply to a manufacturer that had not opted into the National LEV program, including all applicable standards and other requirements promulgated under title II of the Clean Air Act (42 U.S.C. 7521 *et seq.*).

(6) In a non-violating state that has not opted out, obligations under National LEV shall be unaffected for covered manufacturers.

(f) *Conditions allowing manufacturer opt-outs—failure to submit SIP revision.* A covered manufacturer may opt out of National LEV if a covered state fails to submit a National LEV SIP revision on the date specified in § 86.1705(g). For purposes of this paragraph (f), such a state shall be called the ''violating state.''

(1) A covered manufacturer may opt out any time after the violating state misses the deadline for its National LEV SIP revision, provided that EPA has not received a National LEV SIP revision from the violating state prior to EPA's receipt of the manufacturer's opt-out notification. If a manufacturer opts out within 180 calendar days from the deadline for the state to submit its National LEV SIP revision, the opt-out must be conditioned on the state not submitting a National LEV SIP revision within 180 calendar days from the deadline for such SIP revision. If the

state submits such a SIP revision within the 180-day period, any manufacturer opt-outs under this paragraph (f) would be invalidated and would not come into effect. An opt-out under this paragraph (f) shall be effective no earlier than model year 2000 (or model year 2001 if the violating state is the District of Columbia, New Hampshire, Delaware, or Virginia) or the model year named for the calendar year following the calendar year in which EPA receives the opt-out notification, whichever is later.

(2) For a manufacturer that opts out under this paragraph (f), as of model year 2000 (or model year 2001 if the violating state is the District of Columbia, New Hampshire, Delaware, or Virginia) or the model year named for the calendar year following the calendar year in which EPA receives the opt-out notification, whichever is later, the violating state shall no longer be included in the applicable trading region for purposes of calculating that manufacturer's compliance with the fleet average NMOG standards under § 86.1710 and the manufacturer does not have to comply with § 86.1711 for vehicles sold in the violating state. Beginning in that model year and until the manufacturer's opt-out becomes effective, the National LEV program allows a manufacturer that has opted out under this paragraph (f) to certify and produce for sale vehicles meeting the exhaust emission standards of § 86.096–8(a)(1)(i) and subsequent model year provisions or § 86.097–9(a)(1)(i) and subsequent model year provisions in the violating state. For model years in which vehicles sold in the violating state do not count towards the National LEV NMOG average, in calculating emission reductions from new motor vehicles creditable for state implementation plan requirements, the violating state's emissions reductions shall be based on the emissions standards of §§ 86.096–8(a)(1)(i), 86.097–9(a)(1)(i), and subsequent model year provisions, and shall not be based on the National LEV standards, provided that vehicles sold in the violating state are certified to Tier 1 levels when sold in that state. National LEV obligations in the violating state remain unchanged for those manufacturers that do not opt out based on this condition.

(3) Upon the effective date of a manufacturer's opt-out under this paragraph (f), in any covered state that is not a violating state under this paragraph (f), that manufacturer shall be subject to all requirements (except ZEV Mandates) that would apply to a manufacturer that had not opted into the National LEV program, including all applicable standards and other requirements promulgated under title II of the Clean Air Act and any state standards and other requirements (except ZEV Mandates) in effect pursuant to section 177 of the Clean Air Act (42 U.S.C. 7507). For any state Section 177 Program that allowed National LEV as a compliance alternative and was adopted by a non-violating state at least two years before the effective date of a manufacturer's opt-out, a manufacturer waives its right under section 177 of the Clean Air Act to two years of lead time to the extent that the effective date of its opt-out provides for less than two years of lead time and to the extent such a waiver is necessary. With respect to ZEV Mandates, the manufacturer will not be deemed to have waived its two-year lead time under section 177 of the Clean Air Act. A manufacturer shall not be subject to any ZEV Mandates (except Existing ZEV Mandates) in OTC States until the model year (as defined in part 85, subpart X) that commences two years after the date of EPA's receipt of the manufacturer's opt-out notice.

(4) If a covered manufacturer opts out under this paragraph (f), any covered state that is not a violating state under paragraph (e), (f), (g) or (h) of this section may opt out within 90 calendar days of EPA's receipt of the manufacturer's opt-out notification. The state's opt-out notification shall specify an effective date for the state's opt-out no earlier than two calendar years after the date of EPA's receipt of the state's opt-out notification and shall provide that the opt-out is not effective for model years (as defined in part 85, subpart X), that commence prior to this effective date.

(5) In a non-violating state that opts out pursuant to paragraph (f)(4) of this section, obligations under National

LEV shall be unaffected for covered manufacturers until the effective date of the non-violating state's opt-out. Upon the effective date of the state's opt-out, in that state covered manufacturers shall comply with any state standards and other requirements in effect pursuant to section 177 of the Clean Air Act or, if such state standards are not in effect, with all requirements that would apply to a manufacturer that had not opted into the National LEV program, including all applicable standards and other requirements promulgated under title II of the Clean Air Act (42 U.S.C. 7521 *et seq.*).

(6) In a non-violating state that has not opted out, obligations under National LEV shall be unaffected for covered manufacturers.

(g) *Conditions allowing manufacturer opt-outs—inadequate National LEV SIP submission.* A covered manufacturer may opt out of National LEV if EPA disapproves a covered state's National LEV SIP submission or finds that it fails to meet the requirements for a National LEV SIP revision set forth in § 86.1705(g) or if EPA has not taken final action regarding such a SIP submission and more than one year has passed since such SIP submission was submitted to EPA. For purposes of this paragraph (g), such a state shall be called the ''violating state.''

(1) A covered manufacturer may opt out any time after EPA has disapproved a state's National LEV SIP submission or found that it does not meet the requirements of § 86.1705(g), provided that EPA has not subsequently approved a revised National LEV SIP revision from that state and found that the SIP revision meets the requirements of § 86.1705(g). A covered manufacturer may also opt out any time after one year EPA's receipt of a state's National LEV SIP submission, provided that EPA has not approved the revision or has not found that the SIP revision meets the requirements of § 86.1705(g). An opt-out under this condition shall be effective no earlier than the model year named for the calendar year following the calendar year in which the EPA receives the manufacturer's opt-out notification.

(2) For a manufacturer that opts out under this paragraph (g), as of the model year named for the calendar year following the calendar year in which EPA receives the opt-out notification, the violating state shall no longer be included in the applicable trading region for purposes of calculating that manufacturer's compliance with the fleet average NMOG standards under § 86.1710 and the manufacturer does not have to comply with § 86.1711 for vehicles sold in the violating state. Beginning in that model year and until the manufacturer's opt-out becomes effective, the National LEV program allows a manufacturer that has opted out under this paragraph (g) to certify and produce for sale vehicles meeting the exhaust emission standards of § 86.096–8(a)(1)(i) and subsequent model year provisions or § 86.097–9(a)(1)(i) and subsequent model year provisions in the violating state. For model years in which vehicles sold in the violating state do not count towards the National LEV NMOG average, in calculating emission reductions from new motor vehicles creditable for state implementation plan requirements, the violating state's emissions reductions shall be based on the emissions standards of §§ 86.096–8(a)(1)(i), 86.097–9(a)(1)(i), and subsequent model year provisions, and shall not be based on the National LEV standards, provided that vehicles sold in the violating state are certified to Tier 1 levels when sold in that state. National LEV obligations in the violating state remain unchanged for those manufacturers that do not opt out based on this condition.

(3) Upon the effective date of a manufacturer's opt-out under this paragraph (g), in any covered state that is not a violating state under this paragraph (g), that manufacturer shall be subject to all requirements (except ZEV Mandates) that would apply to a manufacturer that had not opted into the National LEV program, including all applicable standards and other requirements promulgated under title II of the Clean Air Act and any state standards and other requirements (except ZEV Mandates) in effect pursuant to section 177 of the Clean Air Act (42 U.S.C. 7507). For any state Section 177 Program that allowed National LEV as a compliance alternative and was adopted by a non-

violating state at least two years before the effective date of a manufacturer's opt-out, a manufacturer waives its right under section 177 of the Clean Air Act to two years of lead time to the extent that the effective date of its opt-out provides for less than two years of lead time and to the extent such a waiver is necessary. With respect to ZEV Mandates, the manufacturer will not be deemed to have waived its two-year lead time under section 177 of the Clean Air Act. A manufacturer shall not be subject to any ZEV Mandates (except Existing ZEV Mandates) in OTC States until the model year (as defined in part 85, subpart X) that commences two years after the date of EPA's receipt of the manufacturer's opt-out notice.

(4) If a covered manufacturer opts out under this paragraph (g), any covered state that is not a violating state under paragraph (e), (f), (g) or (h) of this section may opt out within 90 calendar days of EPA's receipt of the manufacturer's opt-out notification. The state's opt-out notification shall specify an effective date for the state's opt-out that is no earlier than two calendar years after the date of EPA's receipt of the state's opt-out notification and shall provide that the opt-out is not effective for model years (as defined in part 85, subpart X that commence prior to this effective date.

(5) In a non-violating state that opts out pursuant to paragraph (g)(4) of this section, obligations under National LEV shall be unaffected for covered manufacturers until the effective date of the non-violating state's opt-out. Upon the effective date of the state's opt-out, in that state covered manufacturers shall comply with any state standards and other requirements in effect pursuant to section 177 of the Clean Air Act or, if such state standards are not in effect, with all requirements that would apply to a manufacturer that had not opted into the National LEV program, including all applicable standards and other requirements promulgated under title II of the Clean Air Act (42 U.S.C. 7521 *et seq.*).

(6) In a non-violating state that has not opted out, obligations under National LEV shall be unaffected for covered manufacturers.

(h) *Conditions allowing manufacturer opt-outs—adoption of a ZEV Mandate.* A covered manufacturer to which a ZEV Mandate might apply may opt out of National LEV if a covered state without an Existing ZEV Mandate takes final action such that it has in its regulations or state law a ZEV Mandate that allows National LEV as a compliance alternative that would be effective during the state's commitment to National LEV. For purposes of this paragraph (h), such a state shall be called the ''violating state.''

(1) A covered manufacturer may opt out any time after the violating state takes the final action, provided that the violating state has not withdrawn or otherwise nullified the relevant final action prior to EPA's receipt of the opt-out notification. An opt-out under this opt-out condition shall be effective no earlier than the model year named for the calendar year following the calendar year in which EPA receives the manufacturer's opt-out notification.

(2) For a manufacturer that opts out under this paragraph (h), as of the model year named for the calendar year following the calendar year in which EPA receives the opt-out notification, the violating state shall no longer be included in the applicable trading region for purposes of calculating that manufacturer's compliance with the fleet average NMOG standards under § 86.1710 and the manufacturer does not have to comply with § 86.1711 for vehicles sold in the violating state. Beginning in that model year and until the manufacturer's opt-out becomes effective, the National LEV program allows a manufacturer that has opted out under this paragraph (h) to certify and produce for sale vehicles meeting the exhaust emission standards of § 86.096–8(a)(1)(i) and subsequent model year provisions or § 86.097–9(a)(1)(i) and subsequent model year provisions in the violating state. For model years in which vehicles sold in the violating state do not count towards the National LEV NMOG average, in calculating emission reductions from new motor vehicles creditable for state implementation plan requirements, the

violating state's emissions reductions shall be based on the emissions standards of §§ 86.096–8(a)(1)(i), 86.097–9(a)(1)(i), and subsequent model year provisions, and shall not be based on the National LEV standards, provided that vehicles sold in the violating state are certified to Tier 1 levels when sold in that state. National LEV obligations in the violating state remain unchanged for those manufacturers that do not opt out based on this condition.

(3) Upon the effective date of a manufacturer's opt-out under this paragraph (h), in any covered state that is not a violating state under this paragraph (h), that manufacturer shall be subject to all requirements (except ZEV Mandates) that would apply to a manufacturer that had not opted into the National LEV program, including all applicable standards and other requirements promulgated under title II of the Clean Air Act and any state standards and other requirements (except ZEV Mandates) in effect pursuant to section 177 of the Clean Air Act (42 U.S.C. 7507). For any state Section 177 Program that allowed National LEV as a compliance alternative and was adopted by a non-violating state at least two years before the effective date of a manufacturer's opt-out, a manufacturer waives its right under section 177 of the Clean Air Act to two years of lead time to the extent that the effective date of its opt-out provides for less than two years of lead time and to the extent such a waiver is necessary. With respect to ZEV Mandates, the manufacturer will not be deemed to have waived its two-year lead time under section 177 of the Clean Air Act. A manufacturer shall not be subject to any ZEV Mandates (except Existing ZEV Mandates) in OTC States until the model year (as defined in part 85, subpart X) that commences two years after the date of EPA's receipt of the manufacturer's opt-out notice.

(4) If a covered manufacturer opts out under this paragraph (h), any covered state that is not a violating state under paragraph (e), (f), (g) or (h) of this section may opt out within 90 calendar days of EPA's receipt of the manufacturer's opt-out notification. The state's opt-out notification shall specify an effective date for the state's opt-out that is no earlier than two calendar years after the date of EPA's receipt of the state's opt-out notification and shall provide that the opt-out is not effective for model years (as defined in part 85, subpart X) that commence prior to this effective date.

(5) In a non-violating state that opts out pursuant to paragraph (h)(4) of this section, obligations under National LEV shall be unaffected for covered manufacturers until the effective date of the non-violating state's opt-out. Upon the effective date of the state's opt-out, in that state covered manufacturers shall comply with any state standards and other requirements in effect pursuant to section 177 of the Clean Air Act or, if such state standards are not in effect, with all requirements that would apply to a manufacturer that had not opted into the National LEV program, including all applicable standards and other requirements promulgated under title II of the Clean Air Act (42 U.S.C. 7521 *et seq.*).

(6) In a non-violating state that has not opted out, obligations under National LEV shall be unaffected for covered manufacturers.

(i) *Conditions allowing manufacturer opt-outs—EPA failure to consider in-use fuel issues.* A covered manufacturer may opt out of National LEV if EPA does not meet its obligations related to fuel sulfur effects, as those obligations are set forth in paragraph (i)(7) of this section.

(1) A manufacturer may request in writing that EPA consider taking a specific action with regard to a fuel sulfur effect described in paragraph (i)(7) of this section. The request must identify the alleged fuel sulfur related problem, demonstrate that the problem exists and is caused by in-use fuel sulfur levels, ask EPA to consider taking a specific action, and demonstrate the emissions impact of the requested change. Within 60 calendar days of EPA's receipt of the manufacturer's request, EPA must consider the manufacturer's request and respond to it in writing, stating the Agency's decision and explaining the basis for the decision. The date of EPA's response is the date the response is signed.

(2) If EPA fails to respond to a manufacturer's request within the time provided, the covered manufacturer that submitted the request may opt out within 180 calendar days of the deadline for the EPA response. (If such a manufacturer opts out, other manufacturers that did not submit requests may also opt out pursuant to paragraph (j) of this section.) An opt-out notification under this paragraph (i) is not valid if received by EPA after EPA responds to the request, even if EPA responds after the expiration of the 60-day EPA deadline. An opt-out under this paragraph (i) shall be effective no earlier than the model year named for the calendar year following the calendar year in which EPA receives the manufacturer's opt-out notification.

(3) Upon the effective date of a manufacturer's opt-out under this paragraph (i), the manufacturer shall be subject to all requirements (except ZEV Mandates) that would apply to a manufacturer that had not opted into the National LEV program, including all applicable standards and other requirements promulgated under title II of the Clean Air Act (42 U.S.C. 7521 *et seq.*) and any state standards and other requirements (except ZEV Mandates) in effect pursuant to section 177 of the Clean Air Act (42 U.S.C. 7507). For any state Section 177 Program that allowed National LEV as a compliance alternative and was adopted at least two years before the effective date of a manufacturer's opt-out, a manufacturer waives its right under section 177 of the Clean Air Act to two years of lead time to the extent that the effective date of its opt-out provides for less than two years of lead time and to the extent such a waiver is necessary. With respect to ZEV Mandates, the manufacturer will not be deemed to have waived its two-year lead time under section 177 of the Clean Air Act. A manufacturer shall not be subject to any ZEV Mandates (except Existing ZEV Mandates) in OTC States until the model year (as defined in part 85, subpart X) that commences two years after the date of EPA's receipt of the manufacturer's opt-out notice.

(4) If a covered manufacturer opts out under this paragraph (i), any covered state that is not a violating state under paragraph (e), (f), (g) or (h) of this section may opt out within 90 calendar days of EPA's receipt of the manufacturer's opt-out notification. The state's opt-out notification shall specify an effective date for the state's opt-out that is no earlier than two calendar years after the date of EPA's receipt of the state's opt-out notification and shall provide that the opt out is not effective for model years (as defined in part 85, subpart X), that commence prior to this effective date.

(5) In a state that opts out pursuant to paragraph (i)(4) of this section, obligations under National LEV shall be unaffected for covered manufacturers until the effective date of the state's opt-out. Upon the effective date of the state's opt-out, in that state covered manufacturers shall comply with any state standards and other requirements in effect pursuant to section 177 of the Clean Air Act or, if such state standards are not in effect, with all requirements that would apply to a manufacturer that had not opted into the National LEV program, including all applicable standards and other requirements promulgated under title II of the Clean Air Act (42 U.S.C. 7521 *et seq.*).

(6) In a state that has not opted out, obligations under National LEV shall be unaffected for covered manufacturers.

(7) Following are the actions that a manufacturer may request EPA to consider under paragraph (i)(1) of this section:

(i) During the certification process and upon a manufacturer's written request, EPA will consider allowing the use of an on-board diagnostic system (as required by § 86.1717), that functions properly on low sulfur gasoline, but indicates sulfur-induced passes when exposed to high sulfur gasoline.

(ii) Upon a manufacturer's written request, if vehicles exhibit illuminations of the emission control diagnostic system malfunction indicator light (as defined in § 86.094–17(c)) due to high sulfur gasoline, EPA will consider allowing modifications to such vehicles on a case-by-case basis so as to eliminate the sulfur-induced illumination.

(iii) Upon a manufacturer's written request, prior to in-use testing, that presents information to EPA regarding

pre-conditioning procedures designed solely to remove the effects of high sulfur from currently available gasoline, EPA will consider allowing such procedures on a case-by-case basis.

(j) *Conditions allowing manufacturer opt-outs—OTC State or manufacturer opts out.* A covered manufacturer may opt out of National LEV if a covered state or another covered manufacturer opts out of the National LEV program pursuant to this section.

(1) If a covered manufacturer's opt-out under this paragraph (j) is based on a covered state's or covered manufacturer's opt-out under paragraph (e), (f), (g), (h), (i), (j) or (k) of this section, the manufacturer may opt out within 90 calendar days of EPA's receipt of the underlying state's or manufacturer's opt-out notification. If a manufacturer's opt-out under this paragraph (j) is based on a manufacturer's opt-out under paragraph (d) of this section, the manufacturer may only opt out within 90 calendar days of the date of either an EPA finding or a judicial ruling that the opt-out under paragraph (d) of this section is valid. An opt-out under this paragraph (j) shall be effective no earlier than the model year named for the calendar year following the calendar year in which the EPA receives the manufacturer's opt-out notification.

(2) Upon the effective date of a manufacturer's opt-out under this paragraph (j), in any covered state that manufacturer shall be subject to all requirements (except ZEV Mandates) that would apply to a manufacturer that had not opted into National LEV, including all applicable standards and other requirements promulgated under title II of the Clean Air Act and any state standards and other requirements (except ZEV Mandates) in effect pursuant to section 177 of the Clean Air Act (42 U.S.C. 7507). For any state Section 177 Program that allowed National LEV as a compliance alternative and was adopted at least two years before the effective date of a manufacturer's opt-out, a manufacturer waives its right under section 177 of the Clean Air Act to two years of lead time to the extent that the effective date of its opt-out provides for less than two years of lead time and to the extent such a waiver is necessary. With respect to ZEV Mandates, the manufacturer will not be deemed to have waived its two-year lead time under section 177 of the Clean Air Act. A manufacturer shall not be subject to any ZEV Mandates (except Existing ZEV Mandates) in OTC States until the model year (as defined in part 85, subpart X) that commences two years after the date of EPA's receipt of the manufacturer's opt-out notice.

(3) If a covered manufacturer opts out under this paragraph (j), any covered state that is not a violating state under paragraph (e), (f), (g) or (h) of this section may opt out within 90 calendar days of EPA's receipt of the manufacturer's opt-out notification. The state's opt-out notification shall specify an effective date for the state's opt-out no earlier than two calendar years after the date of EPA's receipt of the state's opt-out notification and shall provide that the opt-out is not effective for model years (as defined in part 85, subpart X), that commence prior to this effective date.

(4) In a state that opts out pursuant to paragraph (j)(3) of this section, obligations under National LEV shall be unaffected for covered manufacturers until the effective date of the state's opt-out. Upon the effective date of the state's opt-out, in that state covered manufacturers shall comply with any state standards and other requirements in effect pursuant to section 177 of the Clean Air Act or, if such state standards are not in effect, with all requirements that would apply to a manufacturer that had not opted into the National LEV program, including all applicable standards and other requirements promulgated under title II of the Clean Air Act (42 U.S.C. 7521 *et seq.*).

(5) In a state that has not opted out, obligations under National LEV remain unaffected for covered manufacturers.

(k) *Conditions allowing OTC State opt-outs—EPA finding of inequivalency.* Any covered state may opt out of National LEV if EPA determines that National LEV would not produce (or is not producing) emissions reductions at least equivalent to the OTC State Section 177 Programs.

(1) At any time during National LEV, a covered state may request in writing that EPA reevaluate its initial equivalency determination (of December 16, 1997) that National LEV would produce emissions reductions at least equivalent to the OTC State Section 177 Programs that would be operative in the absence of National LEV. Within 180 calendar days of receipt of the state's request, EPA must take final agency action to determine whether the determination that National LEV will produce at least equivalent emission reductions to OTC State Section 177 Program is still valid. These EPA determinations are not rules, but are nationally applicable final agency actions subject to judicial review pursuant to section 307(b) of the Clean Air Act (42 U.S.C. 7607(b)). In reevaluating its equivalency determination, EPA shall use the same Mobile emission factor model and the same inputs and assumptions (including vehicle miles traveled, MOBILE5a model inputs, inspection and maintenance programs, reformulated gasoline, and permanent migration effects) as used in the initial determination, with the following exceptions:

(i) In modeling the emission reductions from National LEV, EPA shall use any revised federal new motor vehicle standard or other requirement in place of the standard or other requirement as it existed when EPA made its initial determination; and, to the extent that the modeling reflects EPA's implementation of federal new motor vehicle standards or other requirements, EPA shall take any changes in such implementation into account.

(ii) In modeling the emissions reductions that would be achieved through the OTC State Section 177 Programs that would apply in the absence of National LEV, EPA shall take into account all Section 177 Programs adopted by OTC States (including programs that allow National LEV as a compliance alternative) that had been adopted subsequent to EPA's initial equivalency determination. In accounting for the emissions effect of OTC State Section 177 Programs, EPA shall continue to assume that all OTC State Section 177 Programs have the same substantive requirements used in EPA's initial equivalency determination and shall not model any effects of state regulation of medium-duty vehicles (as defined in the California Code of Regulations, Title 13, Division 3, Chapter 1, Article 1, Section 1900).

(2) A covered state may opt out of National LEV within 90 calendar days of a final EPA determination pursuant to paragraph (k)(1) of this section that National LEV would not produce (or is not producing) emissions reductions at least equivalent to OTC State Section 177 Programs. The state's opt-out notification shall specify an effective date for the state's opt-out that is no earlier than two calendar years after the date of EPA's receipt of the state's opt-out notification and shall provide that the opt-out is not effective for model years (as defined in part 85, subpart X), that commence prior to this effective date.

(3) If a covered state opts out based on this condition, a covered manufacturer may opt out of National LEV pursuant to paragraph (j) of this section.

(4) In a state that opts out pursuant to paragraph (k)(1) of this section, obligations under National LEV shall be unaffected for covered manufacturers until the effective date of that state's opt-out. Upon the effective date of the state's opt-out, in that state covered manufacturers shall comply with any state standards and other requirements in effect pursuant to section 177 of the Clean Air Act or, if such state standards and other requirements are not in effect, with all requirements that would apply to a manufacturer that had not opted into the National LEV program, including all applicable standards and other requirements promulgated under title II of the Clean Air Act (42 U.S.C. 7521 *et seq.*).

[63 FR 970, Jan. 7, 1998]

§ 86.1708–99 Exhaust emission standards for 1999 and later light-duty vehicles.

(a) Light-duty vehicles certified under the provisions of this subpart shall comply with the applicable exhaust emission standards in this section. In addition to the exhaust emission standards in this section, light-duty vehicles certified under the provisions of this subpart shall comply with

all applicable emission standards and requirements in § 86.096–8 and subsequent model year provisions.

(1) Light-duty vehicles that meet the exhaust emission standards in this section are deemed to be in compliance with all the exhaust emission standards in § 86.096–8(a)(1)(i) and subsequent model year provisions, except for the emission standards and test procedures for total hydrocarbon (THC), particulate matter (PM), and high altitude conditions. Diesel light-duty vehicles that meet the PM standard in this section are deemed to be in compliance with the PM standard in § 86.096–8 and subsequent model year provisions.

(b)(1) *Standards.* (i) Exhaust emissions from 1999 and later model year light-duty vehicles classified as TLEVs, LEVs, and ULEVs shall not exceed the standards in Tables R99–1 and R99–2 in rows designated with the applicable vehicle emission category. These standards shall apply equally to certification and in-use vehicles, except as provided in paragraph (c) of this section. The tables follow:

TABLE R99–1—INTERMEDIATE USEFUL LIFE (50,000 MILE) STANDARDS (G/MI) FOR LIGHT-DUTY VEHICLES CLASSIFIED AS TLEVS, LEVS, AND ULEVS

Vehicle emission category	NMOG	CO	NO_X	HCHO
TLEV	0.125	3.4	0.4	0.015
LEV	0.075	3.4	0.2	0.015
ULEV	0.040	1.7	0.2	0.008

TABLE R99–2—FULL USEFUL LIFE (100,000 MILE) STANDARDS (G/MI) FOR LIGHT-DUTY VEHICLES CLASSIFIED AS TLEVS, LEVS, AND ULEVS

Vehicle emission category	NMOG	CO	NO_X	HCHO	PM (diesels only)
TLEV	0.156	4.2	0.6	0.018	0.08
LEV	0.090	4.2	0.3	0.018	0.08
ULEV	0.055	2.1	0.3	0.011	0.04

(ii) *Diesel vehicles.* The particulate matter (PM) standards in paragraph (b)(1)(i) of this section are applicable to diesel light-duty vehicles only. For diesel vehicles certifying to the standards set forth in paragraph (b)(1)(i) of this section, ''NMOG'' shall mean non-methane hydrocarbons.

(iii) *NMOG standards for flexible-fuel and dual-fuel light-duty vehicles.* Flexible-fuel and dual-fuel light-duty vehicles shall be certified to exhaust emission standards for NMOG established both for the operation of the vehicle on an available fuel other than gasoline and for the operation of the vehicle on gasoline as specified in § 86.1771.

(A) The applicable NMOG emission standards for flexible-fuel and dual-fuel light-duty vehicles when certifying the vehicle for operation on fuels other than gasoline shall be the NMOG standards in paragraph (b)(1)(i) of this section.

(B) The applicable NMOG emission standards for flexible-fuel and dual-fuel light-duty vehicles when certifying the vehicle for operation on gasoline shall be the NMOG standards in Tables R99–3 and R99–4 in the rows designated with the applicable vehicle emission category, as follows:

TABLE R99–3—INTERMEDIATE USEFUL LIFE (50,000 MILE) NMOG STANDARDS (G/MI) FOR FLEXIBLE-FUEL AND DUAL-FUEL LIGHT-DUTY VEHICLES CLASSIFIED AS TLEVS, LEVS, AND ULEVS

Vehicle emission category	NMOG
TLEV	0.25
LEV	0.125
ULEV	0.075

TABLE R99–4—FULL USEFUL LIFE (100,000 MILE) NMOG STANDARDS (G/MI) FOR FLEXIBLE-FUEL AND DUAL-FUEL LIGHT-DUTY VEHICLES CLASSIFIED AS TLEVS, LEVS, AND ULEVS

Vehicle emission category	NMOG
TLEV	0.31
LEV	0.156
ULEV	0.090

(iv) *Highway NO_X.* The maximum projected NO_X emissions measured on the federal Highway Fuel Economy Test in 40 CFR part 600, subpart B, shall not be greater than 1.33 times the applicable light-duty vehicle standards shown in tables R99–1 and R99–2. Both the projected emissions and the Highway Fuel Economy Test standard shall be rounded to the nearest 0.1 g/mi in accordance with the Rounding-Off Method specified in ASTM E29–90, Standard Practice for Using Significant Digits in Test Data to Determine Conformance with Specifications, before being compared. These procedures are incorporated by reference (see § 86.1).

(v) *Hybrid electric vehicle requirements.* Deterioration factors for hybrid electric vehicles shall be based on the emissions and mileage accumulation of the auxiliary power unit. For certification purposes only, Type A hybrid electric vehicles shall demonstrate compliance with 50,000 mile emission standards (using 50,000 mile deterioration factors), and shall not be required to demonstrate compliance with 100,000 mile emission standards. For certification purposes only, Type B hybrid electric vehicles shall demonstrate compliance with 50,000 mile emission standards (using 50,000 mile deterioration factors) and 100,000 mile emission standards (using 75,000 mile deterioration factors). For certification purposes only, Type C hybrid electric vehicles shall demonstrate compliance with 50,000 mile emission standards (using 50,000 mile deterioration factors) and 100,000 mile emission standards (using 100,000 mile deterioration factors).

(vi) *50 degree F requirements.* Light-duty vehicles shall comply with the emission standards for NMOG, CO, NO_X, and HCHO in paragraph (b)(1)(i) of this section at 50 °F, according to the procedure specified in § 86.1773. Hybrid electric, natural gas, and diesel fueled vehicles are not required to comply with the provisions of this paragraph (b)(1)(vi).

(2) [Reserved]

(c) *In-use emission standards.* (1) 1999 model year light-duty vehicles certified as LEVs and 1999 through 2002 model year light-duty vehicles certified as ULEVs shall meet the applicable intermediate and full useful life in-use standards in paragraph (c)(2) of this section, according to the following provisions:

(i) [Reserved]

(ii) The applicable in-use emission standards for vehicle emission categories and model years not shown in Tables R99–5 and R99–6 shall be the intermediate and full useful life standards in paragraph (b) of this section.

(2) Light-duty vehicles, including flexible-fuel and dual-fuel light-duty vehicles when operated on gasoline and on an available fuel other than gasoline, shall meet all intermediate and full useful life in-use standards for the applicable vehicle emission category and model year in Tables R99–5 and R99–6, as follows:

TABLE R99–5—INTERMEDIATE USEFUL LIFE (50,000 MILE) IN-USE STANDARDS (G/MI) FOR LIGHT-DUTY VEHICLES

Vehicle emission category	Model year	NMOG	CO	NO_X	HCHO
LEV	1999	0.100	3.4	0.3	0.015
ULEV	1999–2000	0.055	2.1	0.3	0.012
	2001–2002	0.055	2.1	0.3	0.008

TABLE R99–6—FULL USEFUL LIFE (100,000 MILE) IN-USE STANDARDS (G/MI) FOR LIGHT-DUTY VEHICLES

Vehicle emission category	Model year	NMOG	CO	NO_X	HCHO
LEV	1999	0.125	4.2	0.4	0.018
ULEV	1999–2002	0.075	3.4	0.4	0.008

(d) *NMOG measurement and reactivity adjustment.* NMOG emissions shall be measured in accordance with Chapter 5 of the California Regulatory Requirements Applicable to the National Low Emission Vehicle Program (October,

1996). These requirements are incorporated by reference (see § 86.1). NMOG emissions shall be compared to the applicable NMOG emissions certification or in-use standard according to the following calculation procedures:

(1) For TLEVs, LEVs, and ULEVs designed to operate on any fuel other than conventional gasoline, and for flexible-fuel and dual-fuel TLEVs, LEVs, and ULEVs when operated on a fuel other than gasoline as specified in § 86.1771, manufacturers shall multiply NMOG exhaust mass emission levels by the applicable reactivity adjustment factor set forth in § 86.1777, or established by the Administrator pursuant to § 86.1777. The product of the NMOG exhaust emission levels and the reactivity adjustment factor shall be compared to the applicable certification or in-use exhaust NMOG mass emission standards established for the particular vehicle emission category to determine compliance.

(2) In addition to multiplying the exhaust NMOG mass emission levels by the applicable reactivity adjustment factor, TLEV, LEV, or ULEV natural gas vehicles shall multiply the exhaust methane mass emission level by the applicable methane reactivity adjustment factor in § 86.1777 or established by the Administrator pursuant to § 86.1777. The reactivity-adjusted NMOG value shall be added to the reactivity-adjusted methane value and then the sum shall be compared to the applicable certification or in-use exhaust NMOG mass emission standards established for the particular vehicle emission category to determine compliance.

(3) The exhaust NMOG mass emission levels for fuel-flexible and dual-fuel vehicles when operating on gasoline as specified in § 86.1771 shall not be multiplied by a reactivity adjustment factor.

(e) *SFTP Standards.* Exhaust emissions from 2001 and later model year light-duty vehicles shall meet the additional SFTP standards in this paragraph (e) according to the implementation schedules in this paragraph (e). The standards set forth in this paragraph (e) refer to exhaust emissions emitted over the Supplemental Federal Test Procedure (SFTP) as set forth in subpart B of this part and collected and calculated in accordance with those procedures.

(1) *Tier 1 vehicles and* TLEVs. The SFTP exhaust emission levels from new 2001 and subsequent model year light-duty vehicles certified to the exhaust emission standards in § 86.099–8(a)(1)(i) and subsequent model year provisions and light-duty vehicles certified as TLEVs shall not exceed the standards in Table R99–7.1, according to the implementation schedule in this paragraph (e)(1).

TABLE R99–7.1—SFTP EXHAUST EMISSION STANDARDS (G/MI) FOR TIER 1 VEHICLES AND TLEVS

Useful life	Fuel type	NMHC + NO_X composite	CO		
			A/C test	US06 test	Composite option
Intermediate	Gasoline	0.65	3.0	9.0	3.4
	Diesel	1.48	NA	9.0	3.4
Full	Gasoline	0.91	3.7	11.1	4.2
	Diesel	2.07	NA	11.1	4.2

(i) *Phase-in requirements—2001 to 2003 model years.* For the purposes of this paragraph (e)(1)(i) only, each manufacturer's light-duty vehicle and light light-duty truck fleet shall be defined as the total projected number of the following types of vehicles sold in California: light-duty vehicles certified to the exhaust emission standards in § 86.099–8(a)(1)(i) and subsequent model year provisions, and light light-duty trucks certified to the exhaust emission standards in § 86.099–9(a)(1)(i) and subsequent model year provisions, and light-duty vehicles and light light-duty trucks certified as TLEVs. As an option, a manufacturer may elect to have its total light-duty vehicle and light light-duty truck fleet defined, for the purposes of this paragraph (e)(1)(i) only, as the total projected number of the manufacturer's light-duty vehicles and light light-duty trucks, other than

zero emission vehicles, certified and sold in California.

(A) Manufacturers of light-duty vehicles and light light-duty trucks, except low volume manufacturers, shall certify a minimum percentage of their light-duty vehicle and light light-duty truck fleet according to the following phase-in schedule:

Model year	Percentage
2001	25
2002	50
2003	85

(B) [Reserved]

(ii) *Phase-in requirements—2004 and later model years.* For the purposes of this paragraph (e)(1)(ii) only, each manufacturer's light-duty vehicle and light light-duty truck fleet shall be defined as the total projected number of the following types of vehicles sold in the United States: light-duty vehicles certified to the exhaust emission standards in § 86.099–8(a)(1)(i) and subsequent model year provisions, and light light-duty trucks certified to the exhaust emission standards in § 86.099–9(a)(1)(i) and subsequent model year provisions, and light-duty vehicles and light light-duty trucks certified as TLEVs. As an option, a manufacturer may elect to have its total light-duty vehicle and light light-duty truck fleet defined, for the purposes of this paragraph (e)(1)(ii) only, as the total projected number of the manufacturer's light-duty vehicles and light light-duty trucks, other than zero emission vehicles, certified and sold in the United States.

(A) In 2004 and subsequent model years, manufacturers of light-duty vehicles and light light-duty trucks, including low volume manufacturers, shall certify 100 percent of their light-duty vehicle and light light-duty truck fleet to the standards in this paragraph (e)(l).

(B) [Reserved]

(iii) *Phase-in requirements—vehicles sold outside California.* Light-duty vehicles and light light-duty trucks sold outside California shall be certified to the applicable emission standards in this paragraph (e) if a vehicle has been certifed to the emission standards in this paragraph (e) for sale in California and is identical in the following respects:

(A) Vehicle manufacturer;

(B) Vehicle make and model;

(C) Cylinder block configuration (L–6, V–8, and so forth);

(D) Displacement;

(E) Combustion cycle;

(F) Transmission class; and

(G) Axle ratio.

(2) *LEVs and ULEVs.* The SFTP standards in this paragraph (e)(2) represent the maximum SFTP exhaust emissions at 4,000 miles +/−250 miles or at the mileage determined by the manufacturer for emission data vehicles in accordance with § 86.1726. The SFTP exhaust emission levels from new 2001 and subsequent model year light-duty vehicle LEVs and ULEVs shall not exceed the standards in the following table, according to the implementation schedule in this paragraph (e)(2)(i).

TABLE R99–7.2—SFTP EXHAUST EMISSION STANDARDS (G/MI) FOR LEVS AND ULEVS

US06 Test		A/C Test	
NMHC + NO_X	CO	NMHC + NO_X	CO
0.14	8.0	0.20	2.7

(i) *Phase-in requirements—2001 to 2003 model years.* For the purposes of this paragraph (e)(2)(i) only, each manufacturer's light-duty vehicle and light light-duty truck fleet shall be defined as the total projected number of light-duty vehicles and light light-duty trucks certified as LEVs and ULEVs sold in California.

(A) Manufacturers of light-duty vehicles and light light-duty trucks, except low volume manufacturers, shall certify to the standards in this paragraph (e)(2) a minimum percentage of their light-duty vehicle and light light-duty truck fleet according to the following phase-in schedule:

Model year	Percentage
2001	25
2002	50
2003	85

(B) Manufacturers may use an ''Alternative or Equivalent Phase-in Schedule'' to comply with the phase-in requirements. An ''Alternative Phase-

in'' is one that achieves at least equivalent emission reductions by the end of the last model year of the scheduled phase-in. Model-year emission reductions shall be calculated by multiplying the percent of vehicles (based on the manufacturer's projected California sales volume of the applicable vehicle fleet) meeting the new requirements per model year by the number of model years implemented prior to and including the last model year of the scheduled phase-in. The ''cumulative total'' is the summation of the model-year emission reductions (e.g., a four model-year 25/50/85/100 percent phase-in schedule would be calculated as: (25%*4 years) + (50%*3 years) + (85%*2 years) + (100%*1 year) = 520). Any alternative phase-in that results in an equal or larger cumulative total than the required cumulative total by the end of the last model year of the scheduled phase-in shall be considered acceptable by the Administrator under the following conditions: All vehicles subject to the phase-in shall comply with the respective requirements in the last model year of the required phase-in schedule; and if a manufacturer uses the optional phase-in percentage determination in paragraph (e)(1)(i) of this section, the cumulative total of model-year emission reductions as determined only for light-duty vehicles and light light-duty trucks certified to this paragraph (e)(2) must also be equal to or larger than the required cumulative total by end of the 2004 model year. Manufacturers shall be allowed to include vehicles introduced before the first model year of the scheduled phase-in (e.g., in the previous example, 10 percent introduced one year before the scheduled phase-in begins would be calculated as: (10%*5 years) and added to the cumulative total).

(ii) *Phase-in requirements—2004 and later model years.* For the purposes of this paragraph (e)(2)(ii) only, each manufacturer's light-duty vehicle and light light-duty truck fleet shall be defined as the total projected number of light-duty vehicles and light light-duty trucks certified as LEVs and ULEVs sold in the United States.

(A) In 2004 and subsequent model years, manufacturers of light-duty vehicles and light light-duty trucks, including low volume manufacturers, shall certify 100 percent of their light-duty vehicle and light light-duty truck fleet to the standards in this paragraph (e)(2).

(iii) *Phase-in requirements—vehicles sold outside California.* Light-duty vehicles and light light-duty trucks sold outside California shall be certified to the applicable emission standards in this paragraph (e) if a vehicle has been certifed to the emission standards in this paragraph (e) for sale in California and is identical in the following respects:

(A) Vehicle manufacturer;

(B) Vehicle make and model;

(C) Cylinder block configuration (L–6, V–8, and so forth);

(D) Displacement;

(E) Combustion cycle;

(F) Transmission class; and

(G) Axle ratio.

(3) *A/C-on specific calibrations.* A/C-on specific calibrations (e.g. air to fuel ratio, spark timing, and exhaust gas recirculation), may be used which differ from A/C-off calibrations for given engine operating conditions (e.g., engine speed, manifold pressure, coolant temperature, air charge temperature, and any other parameters). Such calibrations must not unnecessarily reduce the NMHC+NO_X emission control effectiveness during A/C-on operation when the vehicle is operated under conditions which may reasonably be expected to be encountered during normal operation and use. If reductions in control system NMHC+NO_X effectiveness do occur as a result of such calibrations, the manufacturer shall, in the Application for Certification, specify the circumstances under which such reductions do occur, and the reason for the use of such calibrations resulting in such reductions in control system effectiveness. A/C-on specific ''open-loop'' or ''commanded enrichment'' air-fuel enrichment strategies (as defined below), which differ from A/C-off ''open-loop'' or ''commanded enrichment'' air-fuel enrichment strategies, may not be used, with the following exceptions: Cold-start and warm-up conditions, or, subject to Administrator

approval, conditions requiring the protection of the vehicle, occupants, engine, or emission control hardware. Other than these exceptions, such strategies which are invoked based on manifold pressure, engine speed, throttle position, or other engine parameters shall use the same engine parameter criteria for the invoking of this air-fuel enrichment strategy and the same degree of enrichment regardless of whether the A/C is on or off. ''Open-loop'' or ''commanded'' air-fuel enrichment strategy is defined as enrichment of the air to fuel ratio beyond stoichiometry for the purposes of increasing engine power output and the protection of engine or emissions control hardware. However, ''closed-loop biasing,'' defined as small changes in the air-fuel ratio for the purposes of optimizing vehicle emissions or driveability, shall not be considered an ''open-loop'' or ''commanded'' air-fuel enrichment strategy. In addition, ''transient'' air-fuel enrichment strategy (or ''tip-in'' and ''tip-out'' enrichment), defined as the temporary use of an air-fuel ratio rich of stoichiometry at the beginning or duration of rapid throttle motion, shall not be considered an ''open-loop'' or ''commanded'' air-fuel enrichment strategy.

(4) *''Lean-on-cruise'' calibration strategies.* (i) In the Application for Certification, the manufacturer shall state whether any ''lean-on-cruise'' strategies are incorporated into the vehicle design. A ''lean-on-cruise'' air-fuel calibration strategy is defined as the use of an air-fuel ratio significantly greater than stoichiometry, during non-deceleration conditions at speeds above 40 mph. ''Lean-on-cruise'' air-fuel calibration strategies shall not be employed during vehicle operation in normal driving conditions, including A/C usage, unless at least one of the following conditions is met:

(A) Such strategies are substantially employed during the FTP or SFTP;

(B) Such strategies are demonstrated not to significantly reduce vehicle NMHC+NO_X emission control effectiveness over the operating conditions in which they are employed;

(C) Such strategies are demonstrated to be necessary to protect the vehicle occupants, engine, or emission control hardware.

(ii) If the manufacturer proposes to use a ''lean-on-cruise'' calibration strategy, the manufacturer shall specify the circumstances under which such a calibration would be used, and the reason or reasons for the proposed use of such a calibration.

(iii) The provisions of this paragraph (e)(4) shall not apply to vehicles powered by ''lean-burn'' engines or diesel-cycle engines. A ''lean-burn'' engine is defined as an Otto-cycle engine designed to run at an air-fuel ratio significantly greater than stoichiometry during the large majority of its operation.

(5) *Applicability to alternative fuel vehicles.* These SFTP standards do not apply to vehicles certified on fuels other than gasoline and diesel fuel, but the standards do apply to the gasoline and diesel fuel operation of flexible-fuel vehicles and dual-fuel vehicles.

(6) *Single-roll electric dynamometer requirement.* For all vehicles certified to the SFTP standards, a single-roll electric dynamometer or a dynamometer which produces equivalent results, as set forth in § 86.108, must be used for all types of emission testing to determine compliance with the associated emission standards.

[62 FR 31242, June 6, 1997. Redesignated and amended at 63 FR 976, Jan. 7, 1998]

§ 86.1709–99 Exhaust emission standards for 1999 and later light light-duty trucks.

(a) Light light-duty trucks certified under the provisions of this subpart shall comply with the applicable exhaust emission standards in this section. In addition to the exhaust emission standards in this section, light light-duty trucks certified under the provisions of this subpart shall comply with all applicable emission standards and requirements in § 86.097–9 and subsequent model year provisions.

(1) Light light-duty trucks that meet the exhaust emission standards in this section are deemed to be in compliance with all the exhaust emission standards in § 86.097–9(a)(1)(i) and subsequent model year provisions, except for the emission standards and test procedures

for total hydrocarbon (THC), particulate matter (PM), and high altitude conditions. Diesel light light-duty trucks that meet the PM standard in this section are deemed to be in compliance with the PM standards in § 86.097–9 and subsequent model year provisions.

(2) [Reserved]

(b)(1) *Standards.* (i) Exhaust emissions from 1999 and later model year light light-duty trucks classified as TLEVs, LEVs, and ULEVs shall not exceed the standards in Tables R99–8 and R99–9 in rows designated with the applicable vehicle emission category and loaded vehicle weight. These standards shall apply equally to certification and in-use vehicles, except as provided in paragraph (c) of this section. The tables follow:

TABLE R99–8—INTERMEDIATE USEFUL LIFE (50,000 MILE) STANDARDS (G/MI) FOR LIGHT LIGHT-DUTY TRUCKS CLASSIFIED AS TLEVS, LEVS, AND ULEVS

Loaded vehicle weight	Vehicle emission category	NMOG	CO	NO_X	HCHO
3751	TLEV	0.125	3.4	0.4	0.015
	LEV	0.075	3.4	0.2	0.015
	ULEV	0.040	1.7	0.2	0.008
3751–5750	TLEV	0.160	4.4	0.7	0.018
	LEV	0.100	4.4	0.4	0.018
	ULEV	0.050	2.2	0.4	0.009

TABLE R99–9—FULL USEFUL LIFE (100,000 MILE) STANDARDS (G/MI) FOR LIGHT LIGHT-DUTY TRUCKS CLASSIFIED AS TLEVS, LEVS, AND ULEVS

Loaded vehicle weight	Vehicle emission category	NMOG	CO	NO_X	HCHO	PM (diesels only)
0–3750	TLEV	0.156	4.2	0.6	0.018	0.08
	LEV	0.090	4.2	0.3	0.018	0.08
	ULEV	0.055	2.1	0.3	0.011	0.04
3751–5750	TLEV	0.200	5.5	0.9	0.023	0.10
	LEV	0.130	5.5	0.5	0.023	0.10
	ULEV	0.070	2.8	0.5	0.013	0.05

(ii) *Diesel vehicles.* The particulate matter (PM) standards in paragraph (b)(1)(i) of this section are applicable to diesel vehicles only. For diesel vehicles certifying to the standards set forth in paragraph (b)(1)(i) of this section, ''NMOG'' shall mean non-methane hydrocarbons.

(iii) *NMOG standards for flexible-fuel and dual-fuel light duty trucks.* Flexible-fuel and dual-fuel light light-duty trucks shall be certified to exhaust emission standards for NMOG established both for the operation of the vehicle on an available fuel other than gasoline and for the operation of the vehicle on gasoline as specified in § 86.1771.

(A) The applicable NMOG emission standards for flexible-fuel and dual-fuel light light-duty trucks when certifying the vehicle for operation on fuels other than gasoline shall be the NMOG standards in paragraph (b)(1)(i) of this section.

(B) The applicable NMOG emission standards for flexible-fuel and dual-fuel light light-duty trucks when certifying the vehicle for operation on gasoline shall be the NMOG standards in Tables R99–10 and R99–11 in the rows designated with the applicable vehicle emission category and loaded vehicle weight, as follows:

TABLE R99–10—INTERMEDIATE USEFUL LIFE (50,000 MILE) NMOG STANDARDS (G/MI) FOR FLEXIBLE-FUEL AND DUAL-FUEL LIGHT LIGHT-DUTY TRUCKS CLASSIFIED AS TLEVS, LEVS, AND ULEVS

Loaded vehicle weight	Vehicle emission category	NMOG
0–3750	TLEV	0.25
	LEV	0.125
	ULEV	0.075
3751–5750	TLEV	0.32

TABLE R99–10—INTERMEDIATE USEFUL LIFE (50,000 MILE) NMOG STANDARDS (G/MI) FOR FLEXIBLE-FUEL AND DUAL-FUEL LIGHT LIGHT-DUTY TRUCKS CLASSIFIED AS TLEVS, LEVS, AND ULEVS—Continued

Loaded vehicle weight	Vehicle emission category	NMOG
	LEV	0.160
	ULEV	0.100

TABLE R99–11—FULL USEFUL LIFE (100,000 MILE) NMOG STANDARDS (G/MI) FOR FLEXIBLE-FUEL AND DUAL-FUEL LIGHT LIGHT-DUTY TRUCKS CLASSIFIED AS TLEVS, LEVS, AND ULEVS

Loaded vehicle weight	Vehicle emission category	NMOG
0–3750	TLEV	0.31
	LEV	0.156
	ULEV	0.090
3751–5750	TLEV	0.40
	LEV	0.200
	ULEV	0.130

(iv) *Highway NO_X.* The maximum projected NO_X emissions measured on the federal Highway Fuel Economy Test in 40 CFR part 600, subpart B, shall be not greater than 1.33 times the applicable light light-duty truck standards shown in tables R99–8 and R99–9. Both the projected emissions and the Highway Fuel Economy Test standard shall be rounded to the nearest 0.1 g/mi in accordance with the Rounding-Off Method specified in ASTM E29–90, Standard Practice for Using Significant Digits in Test Data to Determine Conformance with Specifications, before being compared. These procedures are incorporated by reference (see § 86.1).

(v) *Hybrid electric vehicle requirements.* Deterioration factors for hybrid electric vehicles shall be based on the emissions and mileage accumulation of the auxiliary power unit. For certification purposes only, Type A hybrid electric vehicles shall demonstrate compliance with 50,000 mile emission standards (using 50,000 mile deterioration factors), and shall not be required to demonstrate compliance with 100,000 mile emission standards. For certification purposes only, Type B hybrid electric vehicles shall demonstrate compliance with 50,000 mile emission standards (using 50,000 mile deterioration factors) and 100,000 mile emission standards (using 75,000 mile deterioration factors). For certification purposes only, Type C hybrid electric vehicles shall demonstrate compliance with 50,000 mile emission standards (using 50,000 mile deterioration factors) and 100,000 mile emission standards (using 100,000 mile deterioration factors).

(vi) *50 degree F requirements.* Light light-duty trucks shall comply with the emission standards for NMOG, CO, NO_X, and HCHO in paragraph (b)(1)(i) of this section at 50 degrees F, according to the procedure specified in § 86.1773. Hybrid electric vehicles, natural gas vehicles, and diesel fueled vehicles are not required to comply with the provisions of this paragraph (b)(1)(vi).

(2) [Reserved]

(c) *In-use emission standards.* (1) 1999 model year light light-duty trucks certified as LEVs and 1999 through 2001 model year light light-duty trucks certified as ULEVs shall meet the applicable intermediate and full useful life in-use standards in paragraph (c)(2) of this section, according to the following provisions:

(i) [Reserved]

(ii) The applicable in-use emission standards for vehicle emission categories and model years not shown in Tables R99–12 and R99–13 shall be the intermediate and full useful life standards in paragraph (b) of this section.

(2) Light light-duty trucks, including flexible-fuel and dual-fuel light light-duty trucks when operated on gasoline and on an available fuel other than gasoline, shall meet all intermediate and full useful life in-use standards for the applicable vehicle emission category, loaded vehicle weight, and model year in Tables R99–12 and R99–13, as follows:

TABLE R99–12—INTERMEDIATE USEFUL LIFE (50,000 MILE) IN-USE STANDARDS (G/MI) FOR LIGHT LIGHT-DUTY TRUCKS

Loaded vehicle weight	Vehicle emission category	Model year	NMOG	CO	NO_X	HCH0
0–3750	LEV	1999	0.100	3.4	0.3	0.015
	ULEV	1999–2002	0.055	2.1	0.3	0.008

TABLE R99–12—INTERMEDIATE USEFUL LIFE (50,000 MILE) IN-USE STANDARDS (G/MI) FOR LIGHT LIGHT-DUTY TRUCKS—Continued

Loaded vehicle weight	Vehicle emission category	Model year	NMOG	CO	NO_X	HCH0
3751–5750	LEV	1999	0.130	4.4	0.5	0.018
	ULEV	1999–2002	0.070	2.8	0.5	0.009

TABLE R99–13—FULL USEFUL LIFE (100,000 MILE) IN-USE STANDARDS (G/MI) FOR LIGHT LIGHT-DUTY TRUCKS

Loaded vehicle weight	Vehicle emission category	Model year	NMOG	CO	NO_X	HCHO
0–3750	LEV	1999	0.125	4.2	0.4	0.018
	ULEV	1999–2002	0.075	3.4	0.4	0.011
3751–5750	LEV	1999	0.160	5.5	0.7	0.023
	ULEV	1999–2002	0.100	4.4	0.7	0.013

(d) *NMOG measurement and reactivity adjustment.* NMOG emissions shall be measured in accordance with Chapter 5 of the California Regulatory Requirements Applicable to the National Low Emission Vehicle Program (October, 1996). These procedures are incorporated by reference (see § 86.1). NMOG emissions shall be compared to the applicable NMOG emissions certification or in-use standard according to the following calculation procedures:

(1) For TLEVs, LEVs, and ULEVs designed to operate on any fuel other than conventional gasoline, and for flexible-fuel and dual-fuel TLEVs, LEVs, and ULEVs when operated on a fuel other than gasoline as specified in § 86.1771, manufacturers shall multiply NMOG mass exhaust emission levels by the applicable reactivity adjustment factor set forth in § 86.1777 or established by the Administrator pursuant to § 86.1777. The product of the NMOG exhaust emission levels and the reactivity adjustment factor shall be compared to the applicable certification or in-use exhaust NMOG mass emission standards established for the particular vehicle emission category to determine compliance.

(2) In addition to multiplying the exhaust NMOG mass emission levels by the applicable reactivity adjustment factor, TLEV, LEV, or ULEV natural gas vehicles shall multiply the exhaust methane mass emission level by the applicable methane reactivity adjustment factor in § 86.1777 or established by the Administrator pursuant to § 86.1777. The reactivity-adjusted NMOG value shall be added to the reactivity-adjusted methane value and then the sum shall be compared to the applicable certification or in-use exhaust NMOG mass emission standards established for the particular vehicle emission category to determine compliance.

(3) The exhaust NMOG mass emission levels for fuel-flexible and dual-fuel vehicles when operating on gasoline as specified in § 86.1771 shall not be multiplied by a reactivity adjustment factor.

(e) *SFTP Standards.* Exhaust emissions from 2001 and later model year light light-duty trucks shall meet the additional SFTP standards in this paragraph (e) according to the implementation schedules in this paragraph (e). The standards set forth in this paragraph (e) refer to exhaust emissions emitted over the Supplemental Federal Test Procedure (SFTP) as set forth in subpart B of this part and collected and calculated in accordance with those procedures.

(1) *Tier 1 vehicles and* TLEVs. The SFTP exhaust emission levels from new 2001 and subsequent model year light light-duty trucks certified to the exhaust emission standards in § 86.099–9(a)(1)(i) and subsequent model year provisions and light light-duty trucks certified as TLEVs shall not exceed the standards in Table R99–14.1, according to the implementation schedule in this paragraph (e)(1).

TABLE R99–14.1—SFTP EXHAUST EMISSION STANDARDS (G/MI) FOR TIER 1 VEHICLES AND TLEVS

Useful life	Fuel type	LVW (lbs)	NMHC + NO_X composite	CO		
				A/C test	US06 test	Composite option
Intermediate	Gasoline	0–3750	0.65	3.0	9.0	3.4
		3751–5750	1.02	3.9	11.6	4.4
	Diesel	0–3750	1.48	NA	9.0	3.4
		3751–5750	NA	NA	NA	NA
Full	Gasoline	0–3750	0.91	3.7	11.1	4.2
		3751–5750	1.37	4.9	14.6	5.5
	Diesel	0–3750	2.07	NA	11.1	4.2
		3751–5750	NA	NA	NA	NA

(i) *Phase-in requirements—2001 to 2003 model years.* For the purposes of paragraph (e)(1)(i) of this section only, each manufacturer's light-duty vehicle and light light-duty truck fleet shall be defined as the total projected number of the following types of vehicles sold in Calfornia: light-duty vehicles certified to the exhaust emission standards in § 86.099–8(a)(1)(i) and subsequent model year provisions, and light light-duty trucks certified to the exhaust emission standards in § 86.099–9(a)(1)(i) and subsequent model year provisions, and light-duty vehicles and light light-duty trucks certified as TLEVs. As an option, a manufacturer may elect to have its total light-duty vehicle and light light-duty truck fleet defined, for the purposes of this paragraph (e)(1)(i) only, as the total projected number of the manufacturer's light-duty vehicles and light light-duty trucks, other than zero emission vehicles, certified and sold in California.

(A) Manufacturers of light-duty vehicles and light light-duty trucks, except low volume manufacturers, shall certify a minimum percentage of their light-duty vehicle and light light-duty truck fleet according to the following phase-in schedule:

Model year	Percentage
2001	25
2002	50
2003	85

(B) [Reserved]

(ii) *Phase-in requirements—2004 and later model years.* For the purposes of paragraph (e)(1)(ii) of this section only, each manufacturer's light-duty vehicle and light light-duty truck fleet shall be defined as the total projected number of the following types of vehicles sold in the United States: light-duty vehicles certified to the exhaust emission standards in § 86.099–8(a)(1)(i) and subsequent model year provisions, light light-duty trucks certified to the exhaust emission standards in § 86.099–9(a)(1)(i) and subsequent model year provisions, and light-duty vehicles and light light-duty trucks certified as TLEVs. As an option, a manufacturer may elect to have its total light-duty vehicle and light light-duty truck fleet defined, for the purposes of this paragraph (e)(1)(ii) only, as the total projected number of the manufacturer's light-duty vehicles and light light-duty trucks, other than zero emission vehicles, certified and sold in the United States.

(A) In 2004 and subsequent model years, manufacturers of light-duty vehicles and light light-duty trucks, including low volume manufacturers, shall certify 100 percent of their light-duty vehicle and light light-duty truck fleet to the standards in this paragraph (e)(1).

(B) [Reserved]

(iii) *Phase-in requirements—vehicles sold outside California.* Light-duty vehicles and light light-duty trucks sold outside California shall be certified to the applicable emission standards in this paragraph (e) if a vehicle has been certifed to the emission standards in this paragraph (e) for sale in California and is identical in the following respects:

(A) Vehicle manufacturer;

(B) Vehicle make and model;

(C) Cylinder block configuration (L–6, V–8, and so forth);

(D) Displacement;

(E) Combustion cycle;

(F) Transmission class; and

(G) Axle ratio.

(2) *LEVs and ULEVs.* The SFTP standards in this paragraph (e)(2) represent the maximum SFTP exhaust emissions at 4,000 miles +/−250 miles or at the mileage determined by the manufacturer for emission data vehicles in accordance with § 86.1726. The SFTP exhaust emission levels from new 2001 and subsequent model year light light-duty truck LEVs and ULEVs shall not exceed the standards in the following table, according to the implementation schedule in this paragraph (e)(2).

TABLE R99–14.2—SFTP EXHAUST EMISSION STANDARDS (G/MI) FOR LEVS AND ULEVS

US06 test		A/C test	
NMHC + NO_X	CO	NMHC + NO_X	CO
0.25	10.5	0.27	3.5

(i) *Phase-in requirements—2001 to 2003 model years.* For the purposes of this paragraph (e)(2)(i) only, each manufacturer's light-duty vehicle and light light-duty truck fleet shall be defined as the total projected number of light-duty vehicles and light light-duty trucks certified as LEVs and ULEVs sold in California.

(A) Manufacturers of light-duty vehicles and light light-duty trucks, except low volume manufacturers, shall certify to the standards in this paragraph (e)(2) a minimum percentage of their light-duty vehicle and light light-duty truck fleet according to the following phase-in schedule:

Model year	Percentage
2001	25
2002	50
2003	85

(B) Manufacturers may use an ''Alternative or Equivalent Phase-in Schedule'' to comply with the phase-in requirements. An ''Alternative Phase-in'' is one that achieves at least equivalent emission reductions by the end of the last model year of the scheduled phase-in. Model-year emission reductions shall be calculated by multiplying the percent of vehicles (based on the manufacturer's projected California sales volume of the applicable vehicle fleet) meeting the new requirements per model year by the number of model years implemented prior to and including the last model year of the scheduled phase-in. The ''cumulative total'' is the summation of the model-year emission reductions (e.g., a four model-year 25/50/85/100 percent phase-in schedule would be calculated as: (25%*4 years)+(50%*3 years)+(85%*2 years)+(100%*1 year) = 520). Any alternative phase-in that results in an equal or larger cumulative total than the required cumulative total by the end of the last model year of the scheduled phase-in shall be considered acceptable by the Administrator under the following conditions: All vehicles subject to the phase-in shall comply with the respective requirements in the last model year of the required phase-in schedule; and if a manufacturer uses the optional phase-in percentage determination in paragraph (e)(1)(i) of this section, the cumulative total of model-year emission reductions as determined only for light-duty vehicles and light light-duty trucks certified to this paragraph (e)(2) must also be equal to or larger than the required cumulative total by the end of the 2004 model year. Manufacturers shall be allowed to include vehicles introduced before the first model year of the scheduled phase-in (e.g., in the previous example, 10 percent introduced one year before the scheduled phase-in begins would be calculated as: (10%*5 years) and added to the cumulative total).

(ii) *Phase-in requirements—2004 and later model years.* For the purposes of this paragraph (e)(2)(ii) only, each manufacturer's light-duty vehicle and light light-duty truck fleet shall be defined as the total projected number of light-duty vehicles and light light-duty trucks certified as LEVs and ULEVs sold in the United States.

(A) In 2004 and subsequent model years, manufacturers of light-duty vehicles and light light-duty trucks, including low volume manufacturers, shall certify 100 percent of their light-duty vehicle and light light-duty truck fleet to the standards in this paragraph (e)(2).

(B) [Reserved]

(iii) *Phase-in requirements—vehicles sold outside California.* Light-duty vehicles and light light-duty trucks sold outside California shall be certified to the applicable emission standards in

this paragraph (e) if a vehicle has been certifed to the emission standards in this paragraph (e) for sale in California and is identical in the following respects:

(A) Vehicle manufacturer;

(B) Vehicle make and model;

(C) Cylinder block configuration (L–6, V–8, and so forth);

(D) Displacement;

(E) Combustion cycle;

(F) Transmission class; and

(G) Axle ratio.

(3) *A/C-on specific calibrations.* A/C-on specific calibrations (e.g., air to fuel ratio, spark timing, and exhaust gas recirculation), may be used which differ from A/C-off calibrations for given engine operating conditions (e.g., engine speed, manifold pressure, coolant temperature, air charge temperature, and any other parameters). Such calibrations must not unnecessarily reduce the NMHC+NO_X emission control effectiveness during A/C-on operation when the vehicle is operated under conditions which may reasonably be expected to be encountered during normal operation and use. If reductions in control system NMHC+NO_X effectiveness do occur as a result of such calibrations, the manufacturer shall, in the Application for Certification, specify the circumstances under which such reductions do occur, and the reason for the use of such calibrations resulting in such reductions in control system effectiveness. A/C-on specific ''open-loop'' or ''commanded enrichment'' air-fuel enrichment strategies (as defined below), which differ from A/C-off ''open-loop'' or ''commanded enrichment'' air-fuel enrichment strategies, may not be used, with the following exceptions: Cold-start and warm-up conditions, or, subject to Administrator approval, conditions requiring the protection of the vehicle, occupants, engine, or emission control hardware. Other than these exceptions, such strategies which are invoked based on manifold pressure, engine speed, throttle position, or other engine parameters shall use the same engine parameter criteria for the invoking of this air-fuel enrichment strategy and the same degree of enrichment regardless of whether the A/C is on or off. ''Open-loop'' or ''commanded'' air-fuel enrichment strategy is defined as enrichment of the air to fuel ratio beyond stoichiometry for the purposes of increasing engine power output and the protection of engine or emissions control hardware. However, ''closed-loop biasing,'' defined as small changes in the air-fuel ratio for the purposes of optimizing vehicle emissions or driveability, shall not be considered an ''open-loop'' or ''commanded'' air-fuel enrichment strategy. In addition, ''transient'' air-fuel enrichment strategy (or ''tip-in'' and ''tip-out'' enrichment), defined as the temporary use of an air-fuel ratio rich of stoichiometry at the beginning or duration of rapid throttle motion, shall not be considered an ''open-loop'' or ''commanded'' air-fuel enrichment strategy.

(4) *''Lean-on-cruise'' calibration strategies.* (i) In the Application for Certification, the manufacturer shall state whether any ''lean-on-cruise'' strategies are incorporated into the vehicle design. A ''lean-on-cruise'' air-fuel calibration strategy is defined as the use of an air-fuel ratio significantly greater than stoichiometry, during non-deceleration conditions at speeds above 40 mph. ''Lean-on-cruise'' air-fuel calibration strategies shall not be employed during vehicle operation in normal driving conditions, including A/C usage, unless at least one of the following conditions is met:

(A) Such strategies are substantially employed during the FTP or SFTP;

(B) Such strategies are demonstrated not to significantly reduce vehicle NMHC+NO_x emission control effectiveness over the operating conditions in which they are employed;

(C) Such strategies are demonstrated to be necessary to protect the vehicle occupants, engine, or emission control hardware.

(ii) If the manufacturer proposes to use a ''lean-on-cruise'' calibration strategy, the manufacturer shall specify the circumstances under which such a calibration would be used, and the reason or reasons for the proposed use of such a calibration.

(iii) The provisions of this paragraph (e)(4) shall not apply to vehicles powered by ''lean-burn'' engines or diesel-cycle engines. A ''lean-burn'' engine is

defined as an Otto-cycle engine designed to run at an air-fuel ratio significantly greater than stoichiometry during the large majority of its operation.

(5) *Applicability to alternative fuel vehicles.* These SFTP standards do not apply to vehicles certified on fuels other than gasoline and diesel fuel, but the standards do apply to the gasoline and diesel fuel operation of flexible-fuel vehicles and dual-fuel vehicles.

(6) *Single-roll electric dynamometer requirement.* For all vehicles certified to the SFTP standards, a single-roll electric dynamometer or a dynamometer which produces equivalent results, as set forth in §86.108, must be used for all types of emission testing to determine compliance with the associated emission standards.

[62 FR 31242, June 6, 1997. Redesignated and amended at 63 FR 979, Jan. 7, 1998]

§86.1710–99 Fleet average non-methane organic gas exhaust emission standards for light-duty vehicles and light light-duty trucks.

(a) *Fleet average NMOG standards and compliance.* (1) Each manufacturer shall certify light-duty vehicles or light light-duty trucks to meet the exhaust emission standards in this subpart for TLEVs, LEVs, ULEVs, or ZEVs, or the exhaust emission standards of §86.096–8(a)(1)(i) and subsequent model year provisions or §86.097–9(a)(1)(i) and subsequent model year provisions, such that, using the applicable intermediate useful life standards, the manufacturer's fleet average NMOG values for light-duty vehicles and light light-duty trucks sold in the applicable region according to the specifications of Tables R99–15 and R99–16 are less than or equal to the standards in Tables R99–15 and R99–16 in the rows designated with the applicable vehicle type, loaded vehicle weight, and model year, as follows:

TABLE R99–15—FLEET AVERAGE NON-METHANE ORGANIC GAS STANDARDS (g/mi) FOR LIGHT-DUTY VEHICLES AND LIGHT LIGHT-DUTY TRUCKS SOLD IN THE NORTHEAST TRADING REGION

Vehicle type	Loaded vehicle weight	Model year	Fleet average NMOG
Light light-duty vehicles	All	1999	0.148
		2000	0.095
and			
Light light-duty trucks	0–3750.		
Light light-duty trucks	3751–5750	1999	0.190
		2000	0.124

TABLE R99–16—FLEET AVERAGE NON-METHANE ORGANIC GAS STANDARDS (g/mi) FOR LIGHT-DUTY VEHICLES AND LIGHT LIGHT-DUTY TRUCKS SOLD IN THE ALL STATES TRADING REGION

Vehicle type	Loaded vehicle weight	Model year	Fleet average NMOG
Light-duty vehicles	All	2001 and later	0.075
and			
Light light-duty trucks	0–3750.		
Light light-duty trucks	3751–5750	2001 and later	0.100

(2)(i) For the purpose of calculating the HEV contribution factor for the fleet average NMOG value, a manufacturer may use adjusted values to estimate the contributions of hybrid electric vehicles (or ''HEVs'') based on the range of the HEV without the use of the engine. See §86.1702 for definitions of HEV types for purposes of calculating adjusted NMOG emissions.

(ii) For the purpose of calculating fleet average NMOG values, vehicles that have no tailpipe emissions but use fuel-fired heaters and that are not certified as ZEVs shall be treated as Type A HEV ULEVs.

(3)(i) Each manufacturer's applicable fleet average NMOG value for all light

light-duty trucks from 0–3750 lbs. loaded vehicle weight and light-duty vehicles sold in the applicable region according to Tables R99–15 and R99–16 shall be calculated in units of g/mi NMOG according to the following equation, where the term ''Sold'' means sold in the applicable region according to Tables R99–15 and R99–16, and the term ''Vehicles'' means light light-duty trucks from 0–3750 lbs loaded vehicle weight and light-duty vehicles: (((No. of Vehicles Certified to the Federal Tier 1 Exhaust Emission Standards and Sold)×(0.25))+((No. of TLEVs Sold excluding HEVs)× (0.125)) +((No. of LEVs Sold excluding HEVs)×(0.75))+((No. of ULEVs Sold excluding HEVs)×(0.040))+(HEV contribution factor))/(Total No. of Vehicles Sold, including ZEVs and HEVs).

(A) For model years 1997 through 2000, ''Vehicles'' in the preceding equation shall include California-certified vehicles, including vehicles certified to California Tier 1 standards.

(B) For model years 2001 and later, ''vehicles'' in the preceding equation shall not include California-certified vehicles unless they are also certified under the National LEV program.

(ii)(A) ''HEV contribution factor'' shall mean the NMOG emission contribution of HEVs to the fleet average NMOG value. The HEV contribution factor shall be calculated in units of g/mi as follows, where the term ''Sold'' means sold in the applicable region according to tables R99–15 and R99–16.

(B) HEV contribution factor = (((No. of Type A HEV TLEVs Sold) × (0.100)) + ((No. of Type B HEV TLEVs Sold) × (0.113)) + ((No. of Type C HEV TLEVs Sold) × (0.125))) + (((No. of Type A HEV LEVs Sold) × (0.057)) + ((No. of Type B HEV LEVs Sold) × (0.066)) + ((No. of Type C HEV LEVs Sold) × (0.075))) + (((No. of Type A HEV ULEVs Sold) × (0.020)) + ((No. of Type B HEV ULEVs Sold) × (0.030)) + ((No. of Type C HEV ULEVs Sold) × (0.040))).

(iii)(A) For any model year in which a manufacturer certifies its entire fleet of light-duty vehicles and light light-duty trucks from 0–3750 lbs LVW to intermediate useful life NMOG emission standards specified in §§86.1708 and 86.1709 that are less than or equal to the applicable fleet average NMOG standard specified in Tables R99–15 and R99–16, the manufacturer may elect not to calculate a fleet average NMOG value for such vehicles for that model year.

(B) The fleet average NMOG value for a manufacturer electing under paragraph (a)(3)(iii)(A) of this section not to calculate a fleet average NMOG value shall be deemed to be the applicable fleet average NMOG standard specified in Table R99–15 or R99–16 for the applicable model year.

(C) A manufacturer making the election under paragraph (a)(3)(iii)(A) of this section may not generate credits for that model year for light light-duty trucks from 0–3750 lbs LVW and light-duty vehicles.

(4)(i) Each manufacturer's applicable fleet average NMOG value for all light light-duty trucks from 3751–5750 lbs loaded vehicle weight sold in the applicable region according to Tables R99–15 and R99–16 shall be calculated in units of g/mi NMOG according to the following equation, where the term ''Sold'' means sold in the applicable region according to Tables R97–15 and R97–16, and the term ''Vehicles'' means light light-duty trucks from 3751–5750 lbs loaded vehicle weight: (((No. of Vehicles Certified to the Federal Tier 1 Exhaust Emission Standards and Sold)×(0.32))+((No. of TLEVs Sold excluding HEVs)×(0.160))+((No. of LEVs Sold excluding HEVs)×(0.100))+(No. of ULEVs Sold excluding HEVs)×(0.050))+(HEV Contribution factor))/(Total No. of Vehicles Sold, including ZEVs and HEVs).

(A) For model years 1997 through 2000, ''Vehicles'' in the preceding equation shall include California-certified vehicles, including vehicles certified to California Tier 1 standards.

(B) For model years 2001 and later, ''Vehicles'' in the preceding equation shall not include California-certified vehicles unless they are also certified under the National LEV program.

(ii)(A) ''HEV contribution factor'' shall mean the NMOG emission contribution of HEVs to the fleet average NMOG. The HEV contribution factor shall be calculated in units of g/mi as follows, where the term ''Sold'' means sold in the applicable region according to tables R99–15 and R99–16.

(B) HEV contribution factor=(((No. of Type A HEV TLEVs Sold) × (0.130)) + ((No. of Type B HEV TLEVs Sold) × (0.145)) + ((No. of Type C HEV TLEVs Sold) × (0.160))) + (((No. of Type A HEV LEVs Sold) × (0.075)) + ((No. of Type B HEV LEVs Sold) × (0.087)) + ((No. of Type C HEV LEVs Sold) × (0.100))) + (((No. of Type A HEV ULEVs Sold) × (0.025)) + ((No. of Type B HEV ULEVs Sold) × (0.037)) + ((No. of Type C HEV ULEVs Sold) × (0.050))).

(iii)(A) For any model year in which a manufacturer certifies its entire fleet of light light-duty trucks from 3751–5750 lbs LVW to intermediate useful life NMOG emission standards specified in § 86.1709 that are less than or equal to the applicable fleet average NMOG requirements specified in Tables R99–15 and R99–16, the manufacturer may elect not to calculate a fleet average NMOG value for such vehicles for that model year.

(B) The fleet average NMOG value for a manufacturer electing under paragraph (a)(4)(iii)(A) of this section not to calculate a fleet average NMOG value shall be deemed to be the applicable fleet average NMOG standard specified in Table R99–15 or R99–16 for the applicable model year.

(5)(i) The calculation of the fleet average NMOG value pursuant to paragraphs (a)(3) and (a)(4) of this section shall exclude ATVs, as defined in § 86.1702, purchased in the NTR by state governments. In determining the quantity of vehicles to be excluded from the NMOG calculations, a manufacturer shall only be required to exclude vehicles that are reported by the purchasing government in a timely letter, containing adequate information, directed to the representative of the manufacturer listed in the manufacturer's application for certification. Such letter shall be considered timely only if it is received no later than February 1 of the calendar year following the model year of the purchased vehicles.

(ii) Adequate information includes the number of vehicles purchased, vehicle makes and models, and the associated engine families. A copy of the letter should be sent to: Director, Vehicle Programs and Compliance Division, U.S. Environmental Protection Agency, 2565 Plymouth Road, Ann Arbor, Michigan, 48105.

(6) For any model year prior to model year 2001 for which a manufacturer meets the definition of ''low volume manufacturer'' in § 86.1702, it shall be exempt from the requirements in paragraph (a)(1) of this section. The requirements in paragraph (a)(1) of this section applicable to the 2001 and later model years shall apply to low volume manufacturers.

(b) *Fleet average NMOG credit and debit calculations.* (1) For each averaging set, as defined in § 86.1702, manufacturers that achieve fleet average NMOG values lower than the fleet average NMOG standard for the corresponding model year may generate credits.

(2) For each averaging set, manufacturers that obtain applicable fleet average NMOG values exceeding the fleet average NMOG standard for the corresponding model year shall generate debits.

(3) For each averaging set, credits and debits are to be calculated according to the following equation and rounded, in accordance with the Rounding-Off Method specified in ASTM E29–90, Standard Practice for Using Significant Digits in Test Data to Determine Conformance with Specifications, which is incorporated by reference (see § 86.1), to the nearest whole number (intermediate calculations will not be rounded): Number of Credits/Debits = (((Applicable Fleet Average NMOG Standard) − (Manufacturer's Applicable Fleet Average NMOG Value)) × (Applicable Production)).

(4) For each applicable region and model year, a manufacturer's available credits or level of debits shall be the sum of credits or debits derived from the respective class A and class B averaging sets for that region and model year. Paragraph (d)(2)(ii)(C) of this section contains a special provision for manufacturers that end model year 2000 with a debit balance in the NTR.

(c) *Intermediate in-use emission standards.* (1) Only credits generated in the NTR may be used to offset NMOG debits incurred in the NTR. Manufacturers may use in the ASTR credits generated in the NTR.

(2) Only after credits are earned may they be used, traded, or carried over to

another model year. Before trading or carrying over credits to the next model year, a manufacturer must apply available credits to offset any of its debits from the same region, where the deadline to offset such debits has not yet passed.

(3) Credits earned in any given model year shall retain full value through the subsequent model year.

(4) Unused credits that are available at the end of the second, third, and fourth model years after the model year in which the credits were generated shall be discounted to 50%, 25%, and 0% of the original value of the credits, respectively. The discounting of credits also applies to credits transferred to other parties.

(5) Credits may not be used to remedy any nonconformities determined by a Selective Enforcement Audit, recall testing, or testing performed with respect to Title 13, Chapter 2, Articles 1 and 2 of the California Code of Regulations.

(6) Prior to model year 2001, low volume manufacturers may earn credits in the NTR to transfer to other motor vehicle manufacturers for use in the NTR or the ASTR, or to bank for their own use in the ASTR. Such credits will be calculated as set forth in paragraphs (a) and (b) of this section, except that the applicable fleet average NMOG standard shall be 0.25 g/mi NMOG for the averaging set for light light-duty trucks from 0–3750 lbs LVW and light-duty vehicles or 0.32 g/mi NMOG for the averaging set for light light-duty trucks from 3751–5750 lbs LVW. Credits shall be discounted in accordance with the provisions in paragraph (c)(4) of this section.

(7) Prior to model year 2001, manufacturers may earn credits in the ASTR states that are not in the NTR and may bank those credits for use in the ASTR. Such credits will be calculated as set forth in paragraphs (a) and (b) of this section, except that the applicable fleet average NMOG standard shall be 0.25 g/mi NMOG for the averaging set for light light-duty trucks from 0–3750 lbs LVW and light-duty vehicles or 0.32 g/mi NMOG for the averaging set for light light-duty trucks from 3751–5750 lbs LVW, and ''sold'' shall mean sold in the ASTR states that are not in the NTR.

(i) Emission credits earned in the ASTR states outside the NTR prior to model year 2001 shall be treated as generated in model year 2001.

(ii) In the 2001 model year, a one-time discount rate of 10 percent shall be applied to all credits earned under the provisions of this paragraph (c)(7).

(iii) These credits shall be discounted in accordance with the provisions in paragraph (c)(4) of this section.

(8) Manufacturers may earn and bank credits in the NTR for model years 1997 and 1998. In states without a Section 177 Program effective in model year 1997 or 1998, such credits will be calculated as set forth in paragraphs (a) and (b) of this section, except that the applicable fleet average NMOG standard shall be 0.200 g/mi NMOG for the averaging set for light light-duty trucks from 0–3750 lbs LVW and light-duty vehicles or 0.256 g/mi NMOG for the averaging set for light light-duty trucks from 3751–5750 lbs LVW. In states that opt into National LEV and have a Section 177 Program effective in model year 1997 or 1998, such credits will equal the unused credits earned in those states.

(i) Emissions credits earned in the NTR prior to the 1999 model year shall be treated as generated in the 1999 model year.

(ii) In the 1999 model year, a one-time discount rate of 10 percent shall be applied to all credits earned under the provisions of this paragraph (c)(8).

(iii) These credits shall be discounted in accordance with the provisions in paragraph (c)(4) of this section.

(9) There are no property rights associated with credits generated under the provisions of this section. Credits are a limited authorization to emit the designated amount of emissions. Nothing in the regulations or any other provision of law should be construed to limit EPA's authority to terminate or limit this authorization through a rulemaking. If EPA were to terminate or limit the authorization to emit associated with emissions credits generated under the provisions of this section, this paragraph (c)(9) would have no effect on manufacturers' ability to opt

out of the National LEV program pursuant to § 86.1707.

(d) *Fleet average NMOG debits.* (1) Manufacturers shall offset any debits for a given model year by the fleet average NMOG reporting deadline for the model year following the model year in which the debits were generated. Manufacturers may offset debits by generating credits or acquiring credits generated by another manufacturer. Only credits generated in the NTR may be used to offset NMOG debits generated in the NTR.

(2) The provisions of this paragraph (d)(2) apply only when a manufacturer has a debit balance in the NTR at the end of model year 2000. Manufacturers shall offset any debits incurred in the NTR for model year 2000 by the fleet average NMOG reporting deadline for model year 2001.

(i) A manufacturer may offset debits generated in the NTR in model year 2000 either by generating credits in the NTR in model year 2001 or by applying NTR credits acquired under the provisions of this section.

(ii) If a manufacturer has a debit balance in the NTR at the end of model year 2000, then such manufacturer shall be required to calculate fleet average NMOG values for both the NTR and the ASTR for model year 2001.

(A) The NTR values shall be calculated according to paragraphs (a) and (b) of this section, with the fleet average NMOG standards equal to the standards for model year 2001 in the ASTR.

(B) If such a manufacturer has a credit balance in the NTR for model year 2001, before trading or carrying over credits to the next model year, the manufacturer must apply available NTR credits to offset its debits in the NTR.

(C) Notwithstanding paragraph (b)(4) of this section, for the ASTR and model year 2001, such a manufacturer's available credits or level of debits shall be the sum of credits or debits derived from the respective class A and class B averaging sets for the ASTR and model year 2001, minus any credits used pursuant to paragraph (d)(2)(ii)(B).

(iii) To transfer a credit as an NTR credit earned in model year 2001, a manufacturer must have credits generated in the NTR based on separate fleet average NMOG values calculated for the NTR in model year 2001. In addition, the number of model year 2001 NTR credits available for a manufacturer to transfer cannot exceed the manufacturer's available number of model year 2001 ASTR credits. Any transferred model year 2001 NTR credits shall be deducted from the manufacturer's available model year 2001 ASTR credits.

(3)(i) Failure to meet the requirements of paragraphs (a) through (d) of this section within the required timeframe for offsetting debits will be considered to be a failure to satisfy the conditions upon which the certificate(s) was issued and the individual noncomplying vehicles not covered by the certificate shall be determined according to this section.

(ii) If debits are not offset within the specified time period, the number of vehicles not meeting the fleet average NMOG standards and not covered by the certificate shall be calculated by dividing the total amount of debits for the model year by the fleet average NMOG standard applicable for the model year and averaging set in which the debits were first incurred. If both averaging sets are in debit, any applicable credits will first be allocated between the averaging sets according to the manufacturer's expressed preferences. Then, the number of vehicles not covered by the certificate shall be calculated using the revised debit values.

(iii) EPA will determine the vehicles for which the condition on the certificate was not satisfied by designating vehicles in those engine families with the highest certification NMOG emission values first and continuing until a number of vehicles equal to the calculated number of noncomplying vehicles as determined above is reached. If this calculation determines that only a portion of vehicles in an engine family contribute to the debit situation, then EPA will designate actual vehicles in that engine family as not covered by the certificate, starting with the last vehicle produced and counting backwards.

(4) If a manufacturer opts out of the National LEV program pursuant to

§ 86.1707, the manufacturer continues to be responsible for offsetting any debits outstanding on the effective date of the opt-out within the required time period. Any failure to offset the debits will be considered to be a violation of paragraph (d)(1) of this section and may subject the manufacturer to an enforcement action for sale of vehicles not covered by a certificate, pursuant to paragraph (d)(2) of this section.

(5) For purposes of calculating tolling of the statute of limitations, a violation of the requirements of paragraph (d)(1) of this section, a failure to satisfy the conditions upon which a certificate(s) was issued and hence a sale of vehicles not covered by the certificate, all occur upon the expiration of the deadline for offsetting debits specified in paragraph (d)(1) of this section.

(e) *NMOG credit transfers.* (1) EPA may reject NMOG credit transfers if the involved manufacturers fail to submit the credit transfer notification in the annual report.

(2) A manufacturer may not sell credits that are not available for sale pursuant to the provisions in paragraphs (c)(2) or (d)(2) of this section.

(3) Except in instances of fraud on the part of the credit recipient, where a manufacturer sells credits that were not available for sale, the credits shall be treated as valid, and the manufacturer that sold the credits shall be liable for any resulting shortfall.

(4)(i) If a manufacturer transfers a credit that it has not generated pursuant to paragraph (b) of this section or acquired from another party, the manufacturer will be considered to have generated a debit in the model year that the manufacturer transferred the credit. The manufacturer must offset such debits by the deadline for the annual report for that same model year.

(ii) Failure to offset the debits within the required time period will be considered a failure to satisfy the conditions upon which the certificate(s) was issued and will be addressed pursuant to paragraph (d)(3) of this section.

[62 FR 31242, June 6, 1997. Redesignated and amended at 63 FR 983, Jan. 7, 1998]

EFFECTIVE DATE NOTE: At 62 FR 31242, June 6, 1997, subpart R was added, effective Aug. 5, 1997. Section 86.1710–99(a) contains information collection requirements and will not become effective until approval has been given by the Office of Management and Budget.

§ 86.1711–99 Limitations on sale of Tier 1 vehicles and TLEVs; five percent cap.

(a) In the 2001 and subsequent model years, manufacturers may sell Tier 1 vehicles and TLEVs in the NTR only if vehicles with the same engine families are certified and offered for sale in California in the same model year, except as provided under § 86.1705(e)(4).

(b) [Reserved]

[62 FR 31242, June 6, 1997. Redesignated and amended at 63 FR 985, Jan. 7, 1998]

§ 86.1712–99 Maintenance of records; submittal of information.

(a) *Maintenance of records.* (1) The manufacturer producing any light-duty vehicles and/or light light-duty trucks subject to the provisions in this subpart shall establish, maintain, and retain the following information in adequately organized and indexed records for each averaging set of each model year:

(i) Model year;

(ii) Averaging set;

(iii) Fleet average NMOG value achieved; and

(iv) All values used in calculating the fleet average NMOG value achieved.

(2) The manufacturer producing any light-duty vehicles and/or light light-duty trucks subject to the provisions in this subpart shall establish, maintain, and retain the following information in adequately organized and indexed records for each vehicle or truck subject to this subpart:

(i) Model year;

(ii) Averaging set;

(iii) EPA engine family, or if applicable for model year 1999 or 2000, the California engine family;

(iv) Assembly plant;

(v) Vehicle identification number;

(vi) NMOG standard to which the vehicle or truck is certified; and

(vii) Information on the point of first sale, including the purchaser, city, and state.

(3) The manufacturer shall retain all records required to be maintained under this section for a period of eight years from the due date for the annual

report. Records may be retained as hard copy or reduced to microfilm, ADP diskettes, and so forth, depending on the manufacturer's record retention procedure; provided, that in every case all information contained in the hard copy is retained.

(4) Nothing in this section limits the Administrator's discretion to require the manufacturer to retain additional records or submit information not specifically required by this section.

(5) Pursuant to a request made by the Administrator, the manufacturer shall submit to the Administrator the information that the manufacturer is required to retain.

(6) EPA may void *ab initio* a certificate of conformity for a vehicle certified to National LEV certification standards as set forth or otherwise referenced in § 86.1708 or § 86.1709 for which the manufacturer fails to retain the records required in this section or to provide such information to the Administrator upon request.

(b) *Reporting.* (1) Each covered manufacturer shall submit an annual report. Except as provided in paragraph (b)(2) of this section, the annual report shall contain, for each averaging set, the fleet average NMOG value achieved, all values required to calculate the NMOG value, the number of credits generated or debits incurred, and all the values required to calculate the credits or debits. For each applicable region (NTR and ASTR), the annual report shall contain the resulting balance of credits or debits.

(2) When a manufacturer calculates compliance with the fleet average NMOG standards using the provisions in § 86.1710(a)(3)(iii) or § 86.1710(a)(4)(iii), then the annual report shall state that the manufacturer has elected to use such provision and shall contain, for each averaging set, the fleet average NMOG values as specified in § 86.1710(a)(3)(iii) or § 86.1710(a)(4)(iii).

(3) The annual report shall also include documentation on all credit transactions the manufacturer has engaged in since those included in the last report. Information for each transaction shall include:

(i) Name of credit provider;

(ii) Name of credit recipient;

(iii) Date the transfer occurred;

(iv) Quantity of credits transferred;

(v) Model year in which the credits were earned; and

(vi) Region (NTR or ASTR) to which the credits belong.

(4) Unless a manufacturer reports the data required by this section in the annual production report required under § 86.085–37(b) and subsequent model year provisions, a manufacturer shall submit an annual report for each model year after production ends for all affected vehicles and trucks produced by the manufacturer subject to the provisions of this subpart and no later than May 1 of the calendar year following the given model year. Annual reports shall be submitted to: Director, Vehicle Programs and Compliance Division, U.S. Environmental Protection Agency, 2565 Plymouth Road, Ann Arbor, Michigan, 48105.

(5) Failure by a manufacturer to submit the annual report in the specified time period for all vehicles and trucks subject to the provisions in this section is a violation of section 203(a)(1) of the Clean Air Act for each subject vehicle and truck produced by that manufacturer.

(6) If EPA or the manufacturer determines that a reporting error occurred on an annual report previously submitted to EPA, the manufacturer's credit or debit calculations will be recalculated. EPA may void erroneous credits, unless transferred, and shall adjust erroneous debits. In the case of transferred erroneous credits, EPA shall adjust the manufacturer's credit or debit balance to reflect the sale of such credits and any resulting generation of debits.

(c) *Notice of opportunity for hearing.* Any voiding of the certificate under paragraph (a)(6) of this section will be made only after EPA has offered the manufacturer concerned an opportunity for a hearing conducted in accordance with § 86.614 for light-duty vehicles or § 86.1014 for light-duty trucks and, if a manufacturer requests such a hearing, will be made only after an initial decision by the Presiding Officer.

[62 FR 31242, June 6, 1997. Redesignated and amended at 63 FR 985, Jan. 7, 1998]

EFFECTIVE DATE NOTE: At 62 FR 31242, June 6, 1997, subpart R was added, effective Aug. 5, 1997. Section 86.1712–99 contains information

collection requirements and will not become effective until approval has been given by the Office of Management and Budget.

§ 86.1713–99 Light-duty exhaust durability programs.

The provisions of § 86.094–13 and subsequent model year provisions apply to this subpart, except that: Section 86.094–13(f) and subsequent model year provisions does not apply to this subpart.

[62 FR 31242, June 6, 1997. Redesignated at 63 FR 986, Jan. 7, 1998]

§ 86.1714–99 Small volume manufacturers certification procedures.

The provisions of § 86.096–14 and subsequent model year provisions apply to this subpart, except that: Section 86.096–14(c)(7)(i)(A) and subsequent model year provisions does not apply to this subpart.

[62 FR 31242, June 6, 1997. Redesignated at 63 FR 986, Jan. 7, 1998]

§ 86.1715–99 [Reserved]

§ 86.1716–99 Prohibition of defeat devices.

(a) The provisions of § 86.094–16 and subsequent model year provisions apply to this subpart.

(b) [Reserved]

[62 FR 31242, June 6, 1997. Redesignated and amended at 63 FR 986, Jan. 7, 1998]

§ 86.1717–99 Emission control diagnostic system for 1999 and later light-duty vehicles and light-duty trucks.

(a) The provisions of § 86.094–17 and subsequent model year provisions do not apply to this subpart.

(b) The requirements in Chapter 6 of the California Regulatory Requirements Applicable to the National Low Emission Vehicle Program (October, 1996) (these requirements are incorporated by reference; see § 86.1) apply to this subpart.

(c) No vehicle shall be certified under the provisions of this subpart unless such vehicle complies with the requirements of section 202(m)(1), (2), (4), and (5) of the Clean Air Act (42 U.S.C. 7521(m)(1), (2), (4) and (5)).

[62 FR 31242, June 6, 1997. Redesignated at 63 FR 986, Jan. 7, 1998]

§§ 86.1718–99–86.1720–99 [Reserved]

§ 86.1721–99 Application for certification.

The provisions of § 86.096–21 and subsequent model year provisions apply to this subpart, with the following exceptions and additions:

(a) The provisions of § 86.096–21(b)(2) and subsequent model year provisions do not apply to this subpart. The following shall instead apply to this subpart:

(1) For TLEVs, LEVs, and ULEVs not certified exclusively on gasoline, projected U.S. sales data and fuel economy data 19 months prior to January 1 of the calendar year with the same numerical designation as the model year for which the vehicles are certified, and projected U.S. sales data for all vehicles, regardless of operating fuel or vehicle emission category, sufficient to enable the Administrator to select a test fleet representative of the vehicles (or engines) for which certification is requested at the time of certification.

(2) [Reserved]

(b) For ZEVs and hybrid electric vehicles, the certification application shall include the following:

(1) Identification and description of the vehicle(s) covered by the application.

(2) Identification of the vehicle weight category to which the vehicle is certifying: LDV, LDT 0–3750 lbs LVW, LDT 3751–5750 lbs LVW (state test weight range), and the curb weight and gross vehicle weight rating of the vehicle.

(3) Identification and description of the propulsion system for the vehicle.

(4) Identification and description of the climate control system used on the vehicle.

(5) Projected number of vehicles sold in the U.S., and projected U.S. sales.

(6) For electric and hybrid electric vehicles, identification of the energy usage in kilowatt-hours per mile from the point when electricity is introduced from the electrical outlet and the operating range in miles of the vehicle when tested in accordance with the All–Electric Range Test provisions in § 86.1770.

(7) If the vehicle is equipped with a fuel fired heater, a description of the control system logic of the fuel fired heater, including an evaluation of the

conditions under which the fuel fired heater can be operated and an evaluation of the possible operational modes and conditions under which evaporative emissions can exist. Vehicles which utilize fuel fired heaters which can be operated at ambient temperatures above 40 °F or which cannot be demonstrated to have zero evaporative emissions under any and all possible operation modes and conditions shall not be certified as ZEVs.

(8) For ZEVs and HEVs which use fuel fired heaters, the manufacturer shall provide the exhaust emissions value per mile produced by the auxiliary fuel fired heater. This shall be accomplished by determining heater emissions in grams per minute when operating at a maximum heating capacity for a period of 20 minutes, and multiplying that number by 3.6 minutes per mile. At the time of certification, manufacturers shall submit their test plan which describes the procedure used to determine the mass emissions of the fuel fired heater.

(9) All information necessary for proper and safe operation of the vehicle, including information on the safe handling of the battery system, emergency procedures to follow in the event of battery leakage or other malfunctions that may affect the safety of the vehicle operator or laboratory personnel, method for determining battery state-of-charge, battery charging capacity and recharging procedures, and any other relevant information as determined by the Administrator.

(c) For all vehicles subject to the provisions of §86.1717, with its application for certification a description of the malfunction and diagnostic system to be installed on the vehicles. (The vehicles shall not be certified unless the Administrator finds that the malfunction and diagnostic system complies with the requirements of §86.1717.).

[62 FR 31242, June 6, 1997. Redesignated and amended at 63 FR 986, Jan. 7, 1998]

§86.1722–99 [Reserved]

§86.1723–99 Required data.

The provisions of §86.096–23 and subsequent model year provisions apply to this subpart, with the following exceptions and additions:

(a) The provisions of §86.096–23(c)(1) and subsequent model year provisions apply to this subpart, with the following addition:

(1) For all TLEVs, LEVs, and ULEVs certifying on a fuel other than conventional gasoline, manufacturers shall multiply the NMOG exhaust certification level for each emission-data vehicle by the appropriate reactivity adjustment factor listed in §86.1777(d)(2)(i) or established by the Administrator pursuant to Appendix XVII of this part to demonstrate compliance with the applicable NMOG emission standard. For all TLEVs, LEVs, and ULEVs certifying on natural gas, manufacturers shall multiply the NMOG exhaust certification level for each emission-data vehicle by the appropriate reactivity adjustment factor listed in §86.1777(d)(2)(i) or established by the Administrator pursuant to Appendix XVII of this part and add that value to the product of the methane exhaust certification level for each emission-data vehicle and the appropriate methane reactivity adjustment factor listed in §86.1777(d)(2)(ii) or established by the Administrator pursuant to Appendix XVII of this part to demonstrate compliance with the applicable NMOG emission standard. Manufacturers requesting to certify to existing standards utilizing an adjustment factor unique to its vehicle/fuel system must follow the data requirements described in Appendix XVII of this part. A separate formaldehyde exhaust certification level shall also be provided for demonstrating compliance with emission standards for formaldehyde.

(2) [Reserved]

(b) The provisions of §86.096–23(l) introductory text and subsequent model year provisions do not apply to this subpart. The following shall instead apply to this subpart:

(1) Additionally, manufacturers certifying vehicles shall submit for each model year 2001 through 2004 light-duty vehicle and light light-duty truck engine family, the information listed in §86.096–23(l)(1) and (2). If applicable, manufacturers shall also submit ''Alternative or Equivalent Phase-in Schedules'' before or during calendar year 2001 for light-duty vehicles and light light-duty trucks.

(2) [Reserved]

(c) In addition to the provisions of § 86.096–23 and subsequent model year provisions, the following requirements shall apply to this subpart:

(1) For each engine family certified to TLEV, LEV, or ULEV standards, manufacturers shall submit with the certification application, an engineering evaluation demonstrating that a discontinuity in emissions of non-methane organic gases, carbon monoxide, oxides of nitrogen and formaldehyde measured on the Federal Test Procedure (subpart B of this part) does not occur in the temperature range of 20 to 86 deg F. For diesel vehicles, the engineering evaluation shall also include particulate emissions.

(2) [Reserved]

[63 FR 986, Jan. 7, 1998]

§ 86.1724–99 Test vehicles and engines.

The provisions of § 86.096–24 and subsequent model year provisions apply to this subpart, with the following exceptions and additions:

(a) The provisions of § 86.096–24(a)(1) and subsequent model year provisions apply to this subpart, with the following addition:

(1) All engines classified in the same engine family shall be certified to identical exhaust emission standards.

(2) [Reserved]

(b) The provisions of § 86.096–24(b) and subsequent model year provisions apply to this subpart with the following additions:

(1) For TLEVs, LEVs, ULEVs, and ZEVs certifying according to the provisions of this subpart, a manufacturer may substitute emission data vehicles selected by the California Air Resources Board criteria instead of using the criteria specified in § 86.096–24(b)(1)(i), (ii), and (iv) and subsequent model year provisions.

(2) For vehicles certified to the SFTP exhaust emission standards, if air conditioning is projected to be available on any vehicles within the engine family, the selection of engine codes will be limited selections which have air conditioning available and would require that any vehicle selected under this section has air conditioning installed and operational.

[62 FR 31242, June 6, 1997. Redesignated and amended at 63 FR 986, Jan. 7, 1998]

§ 86.1725–99 Maintenance.

The provisions of § 86.094–25 and subsequent model year provisions apply to this subpart, with the following additions:

(a) Hybrid electric vehicles that use Otto-cycle or diesel engines are subject to the applicable Otto-cycle or diesel engine maintenance requirements of § 86.094–25 (b) through (e) and subsequent model year provisions.

(b) Manufacturers of series hybrid electric vehicles and parallel hybrid electric vehicles shall be required to incorporate into the vehicles a separate odometer or other device subject to the approval of the Administrator that can accurately gauge the mileage accumulation on the engines that are used in these vehicles.

(c)(1) The manufacturer shall equip the vehicle with a maintenance indicator consisting of a light that shall activate automatically by illuminating the first time the minimum performance level is observed for all battery system components. Possible battery system components requiring monitoring are:

(i) Battery water level;

(ii) Temperature control;

(iii) Pressure control;

(iv) Other parameters critical for determining battery condition.

(2) The manufacturer of a hybrid electric vehicle shall equip the vehicle with a useful life indicator for the battery system consisting of a light that shall illuminate the first time the battery system is unable to achieve an all-electric operating range (starting from a full state-of-charge) that is at least 75% of the range determined for the vehicle in the All-Electric Range Test (see § 86.1770) and submitted in the certification application.

(3) Hybrid electric vehicle battery system. Manufacturers shall maintain the battery system according to the requirements in paragraph (c)(1) of this section.

(d) When air conditioning SFTP exhaust emission tests are required, the manufacturer must document that the

vehicle's air conditioning system is operating properly and that system parameters are within operating design specifications prior to testing. Required air conditioning system maintenance is performed as unscheduled maintenance that does not require the Administrator's approval.

[62 FR 31242, June 6, 1997. Redesignated and amended at 63 FR 986, Jan. 7, 1998]

§86.1726–99 Mileage and service accumulation; emission measurements.

The provisions of §86.096–26 and subsequent model year provisions apply to this subpart, with the following exceptions and additions:

(a) The provisions of §86.096–26(a)(1) and subsequent model year provisions do not apply to this subpart. The following shall instead apply to this subpart:

(1) Section 86.096–26(a) and subsequent model year provisions applies to light-duty vehicles and light-duty trucks, except ZEVs which shall be exempt from all mileage and service accumulation, durability-data vehicle, and emission-data vehicle testing requirements.

(2) [Reserved]

(b) The provisions of §86.096–26(a)(2) and subsequent model year provisions do not apply to this subpart. The following shall instead apply to this subpart:

(1) The procedure for mileage accumulation shall be the Durability Driving Schedule as specified in appendix IV of this part. A modified procedure (Alternative Service Accumulation Durability Program, §86.094–13(e) and subsequent model year provisions) may also be used if approved in advance by the Administrator. All light-duty vehicles and light-duty trucks shall accumulate mileage at a measured curb weight that is within 100 pounds of the estimated curb weight. If the vehicle weight is within 100 pounds of being included in the next higher inertia weight class as specified in §86.129, the manufacturer may elect to conduct the respective emission tests at the higher weight. All mileage accumulation of hybrid electric vehicles shall be conducted with the battery pack at the manufacturer's indicated lowest state-of-charge at the beginning of the test cycle. At no time throughout mileage accumulation shall the battery pack be charged using any off-board charging source.

(2) [Reserved]

(c) The provisions of §86.096–26(a)(3) (i) and (ii) and subsequent model year provisions apply to this subpart, with the following addition:

(1) For vehicles certified to the SFTP exhaust emission standards, complete exhaust emission tests will include both the FTP and the SFTP tests. The Administrator will accept the manufacturer's determination of the mileage at which the engine-system combination is stabilized for emission data testing if (prior to testing) a manufacturer determines that the interval chosen yields emissions performance that is stable and representative of design intent. Sufficient mileage should be accumulated to reduce the possible effects of any emissions variability that is the result of insufficient vehicle operation. Of primary importance in making this determination is the behavior of the catalyst, EGR valve, trap oxidizer or any other part of the ECS which may have non-linear aging characteristics. In the alternative, the manufacturer may elect to accumulate 4,000 mile +/−250 miles on each test vehicle within an engine family without making a determination.

(2) [Reserved]

(d) The provisions of §86.096–26(a)(4) (i) and (ii) and subsequent model year provisions do not apply to this subpart. The following shall instead apply to this subpart:

(1) For Otto-cycle and diesel vehicles and battery assisted combustion engine vehicles that use Otto-cycle or diesel engines:

(i) Prior to initiation of mileage accumulation in a durability-data vehicle, manufacturers must establish the mileage test interval for durability-data vehicle testing of the engine family. Once testing has begun on a durability-data vehicle, the durability test interval for that family may not be changed. At a minimum, multiple tests must be performed at 5,000 miles, 50,000 miles, and the final mileage point as long as they meet the requirements of

appendix XV of this part. The Administrator will accept durability test interval schedules determined by the manufacturer. The testing must provide a DF confidence level equal to or better than the confidence level using the former fixed mileage test and scheduled maintenance intervals. The procedure for making this determination is specified in appendix XV of this part. The mileage intervals between test points must be approximately of equal length. The ±250 mile test point tolerance and the requirement that tests be conducted before and after scheduled maintenance is still mandatory. Emission control systems for Otto-cycle engines that have step function changes designed into the control system must use the 5,000 mile test interval schedule.

(ii) Testing before and after scheduled (or unscheduled) maintenance points must be conducted, and these data are to be included in the deterioration factor calculation. Testing before unscheduled maintenance may be omitted with the prior consent of the Administrator when testing would be dangerous to a vehicle or an operator. The number of tests before and after scheduled maintenance and the mileage intervals between test points should be approximately equal. Durability test interval schedules with multiple testing at test points within 10,000 miles of or at the 50,000 mile and the final mileage test point must be submitted for approval. Multiple testing at maintenance mileage tests points within 10,000 miles of the 50,000 mile and the final mileage test points may be approved if it can be demonstrated by previously generated data that the emission effects of the maintenance are insignificant.

(iii) For engine families that are to be certified to the full useful life emission standards, each exhaust emission durability-data vehicle shall be driven with all emission control systems installed and operating, for the full useful life or such lesser distance as the Administrator may agree to as meeting the objective of this procedure. Durability tests shall be at every 5,000 miles, from 5,000 miles to the full useful life, however, the above procedures may be used to determine alternate test intervals subject to the following:

(A) For engine families that are to be certified to the full useful life emission standards, durability vehicles may accumulate less than the full useful life if the manufacturer submits other data or information sufficient to demonstrate that the vehicle is capable of meeting the applicable emission standards for the full useful life. At a minimum, 75% of the full useful life shall be accumulated.

(B) For the purpose of conducting mileage accumulation on light-duty hybrid electric vehicles, the full useful life of the auxiliary power unit shall be defined as 50,000 miles for a Type A hybrid electric vehicle, 75,000 miles for a Type B hybrid electric vehicle, and 100,000 miles for a Type C hybrid electric vehicle.

(iv) Alternative durability plans may also be used if the manufacturer provides a demonstration that the alternative plan provides equal or greater confidence that the vehicles will comply in-use with the emission standards. All alternative durability plans are subject to approval in advance by the Administrator.

(2) For diesel vehicles equipped with periodically regenerating trap oxidizer systems, at least four regeneration emission tests (see §§ 86.106 through 86.145) shall be made. The pollutant mass emission calculation procedures for vehicles equipped with periodically regenerating trap oxidizer systems are included in appendix XVI of this part. With the advance approval of the Administrator, the manufacturer may install: A manual override switch capable of preventing (i.e., delaying until the switch is turned off) the start of the regeneration process; and a light which indicates when the system would initiate regeneration if it had no override switch. Upon activation of the override switch the vehicle will be operated on a dynamometer to precondition it for the regeneration emission test in accordance with §§ 86.132 and 86.1772. The Urban Dynamometer Driving Schedule (UDDS) that is in progress at the time when the light comes on shall be completed and the vehicle shall proceed to the prescribed soak period followed by testing. With the advance approval of

the Administrator, the manual override switch will be turned off at some predetermined point in the testing sequence, permitting the regeneration process to proceed without further manual interaction. The mileage intervals between test points shall be approximately equal. The first regeneration emission test shall be made at the 5,000 mile point. The regeneration emission tests must provide a deterioration factor confidence level equal to or better than the confidence level achieved by performing regeneration emission tests at the following mileage points: 5,000; 25,000; 50,000; 75,000; and 100,000. The procedure for making this determination is shown in appendix XV of this part.

(3) For gasoline-, gaseous-, and alcohol-fueled vehicles that are certified by a whole-vehicle durability protocol, the specified evaporative durability test points are at 5,000, 40,000, 75,000, and 100,000 miles. These requirements are also applicable to hybrid electric vehicles. With the exception of flexible-fuel vehicles, a manufacturer may conduct evaporative testing at test points used for exhaust emission durability testing, provided that the same deterioration confidence level for the evaporative emission DF determination is retained (see appendix XIV of this part).

(4) For flexible-fuel vehicles certifying to TLEV, LEV, or ULEV standards, the test schedule shall include exhaust emission tests at 5,000 miles, 10,000 miles, and every 10,000 miles thereafter to the final mileage point using M85 or E85 and certification gasoline. For all flexible-fuel vehicles, if evaporative emission testing is conducted, exhaust and evaporative emission tests shall also be conducted using M35 or E10, or another approved fuel, at the mileage points where M85 or E85 testing is conducted. The results of these exhaust and evaporative emission tests will be used by the Administrator to evaluate the vehicle's emission control deterioration with various fuels (M85, M35, and unleaded gasoline; See fuel specifications in §86.1771). Only the M85 or E85 and certification gasoline exhaust emission results and the M35 or E10 evaporative emission results will be used to determine applicable exhaust and evaporative emission deterioration factors, respectively, as required in §86.1728 (Compliance with Emission Standards).

(e) The provisions of §86.096–26(a)(5)(i) and subsequent model year provisions apply to this subpart, with the following addition:

(1) In addition, the emission tests performed on emission-data vehicles and durability-data vehicles shall be non-regeneration emission tests for diesel light-duty vehicles and light-duty trucks equipped with periodically regenerating trap oxidizer systems. For any of these vehicles equipped with continually regenerating trap oxidizer systems, manufacturers may use the provisions applicable to periodically regenerating trap oxidizer systems as an option. If such an option is elected, all references in these procedures to vehicles equipped with periodically regenerating trap oxidizer systems shall be applicable to the vehicles equipped with continually regenerating trap oxidizer systems.

(2) [Reserved]

(f) The provisions of §86.096–26(a)(8) and subsequent model year provisions do not apply to this subpart. The following shall instead apply to this subpart:

(1) Once a manufacturer submits the information required in §86.096–26(a)(7) and subsequent model year provisions for a durability-data vehicle, the manufacturer shall continue to run the vehicle to 50,000 miles if the family is certified to 50,000 mile emission standards or to the full useful life if it is certified to emission standards beyond 50,000 miles (or to a lesser distance that the Administrator may have previously agreed to), and the data from the vehicle will be used in the calculations under §86.094–28 and subsequent model year provisions. Discontinuation of a durability-data vehicle shall be allowed only with the consent of the Administrator.

(2) [Reserved]

(g) The provisions of §86.096–26(b) and subsequent model year provisions do not apply to this subpart.

(h)(1) The exhaust emissions shall be measured from all exhaust emission data vehicles tested in accordance with the federal Highway Fuel Economy

Test (HWFET; 40 CFR part 600, subpart B). The oxides of nitrogen emissions measured during such tests shall be multiplied by the oxides of nitrogen deterioration factor computed in accordance with § 86.094–28 and subsequent model year provisions, and then rounded and compared with the applicable emission standard in §§ 86.1708 and 86.1709. All data obtained pursuant to this paragraph (h)(1) shall be reported in accordance with procedures applicable to other exhaust emissions data required pursuant to these procedures. Hybrid electric vehicles shall be tested with the battery state-of-charge set such that one of the following two conditions is satisfied:

(i) The state-of-charge is at the lowest level allowed by the control unit of the auxiliary power unit; or

(ii) The state-of-charge is set such that auxiliary power unit operation will be at its maximum level at the beginning and throughout the emission test.

(2) In the event that one or more of the manufacturer's emission data vehicles fail the applicable HWFET standard in §§ 86.1708 and 86.1709, the manufacturer may submit to the Administrator engineering data or other evidence showing that the system is capable of complying with the standard. If the Administrator finds, on the basis of an engineering evaluation, that the system can comply with the HWFET standard, he or she may accept the information supplied by the manufacturer in lieu of vehicle test data.

[62 FR 31242, June 6, 1997. Redesignated and amended at 63 FR 987, Jan. 7, 1998]

§ 86.1727–99 [Reserved]

§ 86.1728–99 Compliance with emission standards.

The provisions of § 86.094–28 and subsequent model year provisions apply to this subpart, with the following exceptions and additions:

(a) The provisions of § 86.094–28(a)(1) and subsequent model year provisions do not apply to this subpart. The following shall instead apply to this subpart:

(1) The provisions of § 86.094–28(a) and subsequent model year provisions apply to light-duty vehicles and light light-duty trucks, except ZEVs.

(2) [Reserved]

(b) The provisions of § 86.094–28(a)(4)(i) and subsequent model year provisions do not apply to this subpart. The following shall instead apply to this subpart:

(1) Separate emission deterioration factors shall be determined from the exhaust emission results of the durability-data vehicle(s) for each engine-system combination. A separate factor shall be established for exhaust HC (non-alcohol vehicles, non-TLEVs, non-LEVs, and non-ULEVs), exhaust OMHCE or OMNMHCE (alcohol vehicles that are not TLEVs, LEVs, or ULEVs), exhaust NMOG (all TLEVs, LEVs, ULEVs), exhaust formaldehyde (alcohol vehicles, TLEVs, LEVs, ULEVs), exhaust CO, exhaust NO_X, and exhaust particulate (diesel vehicles only) for each engine-system combination. A separate evaporative emission deterioration factor shall be determined for each evaporative emission family-evaporative emission control system combination from the testing conducted by the manufacturer (gasoline- and alcohol-fueled vehicles only). Separate emission correction factors (diesel light-duty vehicles and light-duty trucks equipped with periodically regenerating trap oxidizer systems only) shall be determined from the exhaust emission results of the durability-data vehicle(s) for each engine-system combination. A separate factor shall be established for exhaust HC (non-alcohol vehicles, non-TLEVs, non-LEVs, and non-ULEVs), exhaust OMHCE or OMNMHCE (alcohol vehicles that are not TLEVs, LEVs, or ULEVs), exhaust NMOG (TLEVs, LEVs, ULEVs), exhaust CO, exhaust NO_X, and exhaust particulate for each engine-system combination.

(2) [Reserved]

(c) The provisions of § 86.094–28(a)(4)(i)(A)(*4*) and subsequent model year provisions do not apply to this subpart. The following shall instead apply to this subpart:

(1) The manufacturer must use the outlier identification procedure set forth in appendix VIII of this part to test for irregular data from a durability-data set. If any data point is identified as a statistical outlier, the Administrator shall determine, on the basis of an engineering analysis of the causes

of the outlier submitted by the manufacturer, whether the outlier is to be rejected. The outlier shall be rejected only if the Administrator determines that the outlier does not reflect representative characteristics of the emission control system, *i.e.,* the outlier is a result of an emission control system anomaly, test procedure error, or an extraordinary circumstance not expected to recur. Only the identified outlier shall be eliminated; other data at that test point (i.e., data for other pollutants) shall not be eliminated unless the Administrator determines, based on the engineering analysis, that they also do not reflect representative characteristics of the emission control system. Where the manufacturer chooses to apply both the outlier procedure and averaging to the same data set, the outlier procedure shall be completed prior to applying the averaging procedure. All durability test data, including any outliers and the manufacturer's engineering analysis, shall be submitted with the final application.

(2) [Reserved]

(d) The provisions of § 86.094–28(a)(4)(i)(B) and subsequent model year provisions do not apply to this subpart. The following shall instead apply to this subpart:

(1) All applicable exhaust emission results shall be plotted as a function of the mileage on the system, rounded to the nearest mile, and the best fit straight lines, fitted by the method of least squares, shall be drawn through all these data points. The emission data will be acceptable for use in the calculation of the deterioration factor only if the interpolated 4,000-mile, 50,000-mile, and full useful life points on this line are within the applicable emission standards in §§ 86.1708 and 86.1709. For hybrid electric vehicles, the emission data will be acceptable for use in the calculation of the deterioration factor only if the engine mileage points corresponding to the interpolated 4,000 mile, 50,000 mile, and full useful life points of the vehicle on this line are within the applicable emission standards in §§ 86.1708 and 86.1709. The engine mileage points shall be determined based on the test schedule submitted to the Administrator as required in § 86.096–26. As an exception, the Administrator will review the data on a case-by-case basis and may approve its use in those instances where the best fit straight line crosses an applicable standard but no data point exceeds the standard or when the best fit straight line crosses the applicable standard at the 4,000-mile point but the 5,000-mile actual test point and the 50,000 mile and full useful life interpolated points are both below the standards. A multiplicative exhaust emission deterioration factor shall be calculated for each engine system combination as follows:

(i) For engine families certified to 50,000 mile emissions standards: Factor = Exhaust emissions interpolated to 50,000 miles divided by exhaust emissions interpolated to 4,000 miles.

(ii) For engine families certified to full useful life emissions standards beyond 50,000 miles: Factor = Exhaust emissions interpolated to the full useful life divided by exhaust emissions interpolated to 4,000 miles.

(2) [Reserved]

(e) The following requirements shall be in addition to the provisions of § 86.094–28(a)(4) and subsequent model year provisions:

(1)(i) The regeneration exhaust emission data (diesel light-duty vehicles and light-duty trucks equipped with periodically regenerating trap oxidizer systems only) from the tests required under § 86.096–26(a)(4) and subsequent model year provisions shall be used to determine the regeneration exhaust emissions interpolated to the 50,000-mile point. The regeneration exhaust emission results shall be plotted as a function of the mileage on the system, rounded to the nearest mile, and the best fit straight lines, fitted by the method of least squares, shall be drawn through all these data points. The interpolated 50,000-mile point of this line shall be used to calculate the multiplicative exhaust emission correction factor for each engine-system combination as follows:

$$\text{Factor} = 1 + \frac{R - 1}{4505} n$$

where:

R = the ratio of the regeneration exhaust emissions interpolated to 50,000 miles to

the non-regeneration exhaust emissions interpolated to 50,000 miles.

n = the number of complete regenerations which occur during the durability test.

(ii) The interpolated values determined in paragraph (e)(1)(i) of this section shall be carried out to a minimum of four places to the right of the decimal point before dividing one by the other to determine the correction factor. The results shall be rounded to three places to the right of the decimal point in accordance with the Rounding-Off Method specified in ASTM E 29–90, Standard Practice for Using Significant Digits in Test Data to Determine Conformance with Specifications (incorporated by reference; see §86.1). For applicability to gaseous emission standards under the 100,000 mile option, R will be determined based upon projected 100,000 mile emissions.

(2) [Reserved]

(f) The provisions of §86.094–28(a)(4)(ii)(A) and subsequent model year provisions do not apply to this subpart. The following shall instead apply to this subpart:

(1) The official exhaust emission test results for each emission-data vehicle at the 4,000 mile test point shall be multiplied by the appropriate deterioration factor, and correction factor (diesel light-duty vehicles and light-duty trucks equipped with periodically regenerating trap oxidizer systems only): Provided: that if a deterioration factor as computed in §86.094–28(a)(4)(i)(B) and subsequent model year provisions or a correction factor as computed in paragraph (e) of this section is less than one, that deterioration factor or correction factor shall be one for the purposes of this paragraph (f).

(2) [Reserved]

(g) The provisions of §86.094–28(a)(4)(iii) and subsequent model year provisions do not apply to this subpart. The following shall instead apply to this subpart:

(1) The emissions to compare with the standard (or the family particulate emission limit, as appropriate) shall be the adjusted emissions of §86.094–28(a)(4)(ii) (A) and (B) and subsequent model year provisions for each emission-data vehicle. Before any emission value is compared with the standard (or the family particulate limit, as appropriate), it shall be rounded to one significant figure beyond the number of significant figures contained in the standard (or the family particulate emission limit, as appropriate) in accordance with the Rounding-Off Method specified in ASTM E 29–90, Standard Practice for Using Significant Digits in Test Data to Determine Conformance with Specifications (incorporated by reference; see §86.1). The rounded emission values may not exceed the standard (or the family particulate emission limit, as appropriate). Fleet average NMOG value calculations shall be rounded to four significant figures in accordance with the Rounding-Off Method specified in ASTM E 29–90, Standard Practice for Using Significant Digits in Test Data to Determine Conformance with Specifications (incorporated by reference; see §86.1) before comparing with fleet average NMOG requirements.

(2) [Reserved]

(h) The provisions of §86.094–28(b) and subsequent model year provisions do not apply to this subpart.

[62 FR 31242, June 6, 1997. Redesignated at 63 FR 987, Jan. 7, 1998]

§§ 86.1729–99–86.1733–99 [Reserved]

§ 86.1734–99 Alternative procedure for notification of additions and changes.

The provisions of §86.082–34 and subsequent model year provisions apply to this subpart, with the following exceptions and additions:

(a) The provisions of §86.082–34(a) and subsequent model year provisions apply to this subpart, with the following addition:

(1) A manufacturer must notify the Administrator within 10 working days of making an addition of a vehicle to a certified engine family or a change in a vehicle previously covered by certification. The manufacturer shall also submit, upon request of the Administrator, the following items:

(i) service bulletin;

(ii) driveability statement;

(iii) test log;

(iv) maintenance log.

(2) All running changes and field fixes that do not adversely affect the system durability are deemed approved unless disapproved by the Administrator

within 30 days of the receipt of the running change or field fix request. A change not specifically identified in the manufacturer's application must also be reported to the Administrator if the change may adversely affect engine or emission control system durability. Examples of such changes include any change that could affect durability, thermal characteristics, deposit formation, or exhaust product composition, i.e., combustion chamber design, cylinder head material, camshaft profile, computer modifications, turbocharger, intercooler wastegate characteristics, and transmission or torque converter specifications. The manufacturer is required to update and submit to the Administrator the ''supplemental data sheet'' for all running changes and field fixes implemented with the change notification. The manufacturer shall submit, on a monthly basis, by engine family, a list of running changes/field fixes giving the document number date submitted and a brief description of the change.

(b) [Reserved]

[62 FR 31242, June 6, 1997. Redesignated at 63 FR 987, Jan. 7, 1998]

§86.1735–99 Labeling.

The following requirements shall apply to TLEVs, LEVs, ULEVs, and ZEVs certified under the provisions of this subpart:

(a) The requirements in §86.096–35 and subsequent model year provisions do not apply to this section.

(b) The requirements in Chapter 7 of the California Regulatory Requirements Applicable to the National Low Emission Vehicle Program (October, 1996) shall apply. These requirements are incorporated by reference (see §86.1).

[62 FR 31242, June 6, 1997. Redesignated at 63 FR 987, Jan. 7, 1998]

§§86.1736–99–86.1769–99 [Reserved]

§86.1770–99 All-Electric Range Test requirements.

(a) ZEVs and Type A and Type B hybrid electric vehicles shall be subject to the All-Electric Range Test specified below for the purpose of determining the energy efficiency and operating range of a ZEV or of a hybrid electric vehicle operating without the use of its auxiliary power unit. For hybrid electric vehicles, the manufacturer may elect to conduct the All-Electric Range Test prior to vehicle preconditioning in the exhaust and evaporative emission test sequence specified in subpart B of this part.

(1) *Cold soak.* The vehicle shall be stored at an ambient temperature not less than 68 °F (20 °C) and not more than 86 °F (30 °C) for 12 to 36 hours. During this time, the vehicle's battery shall be charged to a full state-of-charge.

(2) *Driving schedule*—(i) *Determination of All-Electric Range—Highway.* At the end of the cold soak period, the vehicle shall be placed, either driven or pushed, onto a dynamometer and operated through an Urban Dynamometer Driving Schedule, found in 40 CFR part 86, Appendix I, until the vehicle is no longer able to maintain within 5 miles per hour of the speed requirements or within 2 seconds of the time requirements of the driving schedule. For hybrid electric vehicles, this determination shall be performed without the use of the auxiliary power unit.

(ii) *Determination of All-Electric Range—Urban.* At the end of the cold soak period, the vehicle shall be placed, either driven or pushed, onto a dynamometer and operated through a Highway Fuel Economy Driving Schedule, found in 40 CFR part 600, Appendix I, until the vehicle is no longer able to maintain within 5 miles per hour of the speed requirements or within 2 seconds of the time requirements of the driving schedule. For hybrid electric vehicles, this determination shall be performed without the use of the auxiliary power unit.

(3) *Recording requirements.* Once the vehicle is no longer able to maintain the speed and time requirements specified in paragraph (a)(2) of this section, or once the auxiliary power unit turns on, in the case of a hybrid electric vehicle, the accumulated mileage and energy usage of the vehicle from the point where electricity is introduced from the electrical outlet shall be recorded, and the vehicle shall be brought to an immediate stop, thereby concluding the All-Electric Range Test.

(4) *Regenerative braking.* Regenerative braking systems may be utilized during the range test. The braking level, if adjustable, shall be set according to the manufacturer's specifications prior to the commencement of the test. The driving schedule speed and time tolerances specified in paragraph (a)(2) of this section shall not be exceeded due to the operation of the regenerative braking system.

(b) [Reserved]

[62 FR 31242, June 6, 1997. Redesignated and amended at 63 FR 987, Jan. 7, 1998]

§ 86.1771–99 Fuel specifications.

(a) The provisions of § 86.113 apply to this subpart, with the following exceptions and additions.

(1) For light-duty vehicles and light light-duty trucks, gasoline having the specifications listed below may be used in exhaust emission testing as an option to the specifications in § 86.113(a)(1). If a manufacturer elects to utilize this option, exhaust emission testing shall be conducted by the manufacturer with gasoline having the specifications listed in the table in this paragraph (a)(1), and the Administrator shall conduct exhaust emission testing with gasoline having the specifications listed in the table in this paragraph (a)(1). Specifications for non-gasoline fuels and all fuel property test methods are contained in Chapter 4 of the California Regulatory Requirements Applicable to the National Low Emission Vehicle Program (October, 1996). These requirements are incorporated by reference (see § 86.1). The table follows:

Fuel property	Limit
Octane, (R+M)/2 (min)	91.
Sensitivity (min)	7.5.
Lead, g/gal (max) (No lead added).	0–0.01
Distillation Range, °F	
10 pct. point,	130–150.
50 pct. point,	200–210.
90 pct. point,	290–300.
EP, maximum	390.
Residue, vol % (max)	2.0.
Sulfur, ppm by wt.	30–40.
Phosphorous, g/gal (max)	0.005.
RVP, psi	6.7–7.0.
Olefins, vol %	4.0–6.0.
Total Aromatic Hydrocarbons (vol %).	22–25.
Benzene, vol %	0.8–1.0.
Multi-Substituted Alkyl Aromatic Hydrocarbons, vol %.	12–14.
MTBE, vol %	10.8–11.2.
Additives	See Chapter 4 of the California Regulatory Requirements Applicable to the National Low Emission Vehicle Program (October, 1996). These procedures are incorporated by reference (see § 86.1).
Copper Corrosion	No. 1.
Gum, Washed, mg/100 ml (max).	3.0.
Oxidation Stability, minutes (min).	1,000.
Specific Gravity	No limit; report to purchaser required.
Heat of Combustion	No limit; report to purchaser required.
Carbon, wt %	No limit; report to purchaser required.
Hydrogen, wt %	No limit; report to purchaser required.

(2) [Reserved]

(b) [Reserved]

[62 FR 31242, June 6, 1997. Redesignated at 63 FR 987, Jan. 7, 1998]

§ 86.1772–99 Road load power, test weight, and inertia weight class determination.

(a) The provisions of § 86.129 apply to this subpart.

(b) The following requirements shall also apply to this subpart:

(1) For electric and hybrid electric vehicle lines where it is expected that more than 33 percent of a vehicle line will be equipped with air conditioning, per § 86.096–24(g)(2), that derives power from the battery pack, the road load shall be increased by the incremental horsepower required to operate the air conditioning unit. The incremental increase shall be determined by recording the difference in energy required for a hybrid electric vehicle under all-electric power to complete the running loss test fuel tank temperature profile test sequence without air conditioning and the same vehicle tested over the running loss test fuel tank temperature profile test sequence with the air conditioning set to the ''NORMAL'' air conditioning mode and adjusted to the minimum discharge air temperature and high fan speed over the time period needed to perform the test sequence, and converting this value into units of horsepower. Vehicles equipped with automatic temperature controlled air conditioning systems shall be operated in ''AUTOMATIC'' temperature and fan

modes with the system set at 72 °F. The running loss test fuel tank temperature profile test sequence is found in §86.129(d).

(2) [Reserved]

[62 FR 31242, June 6, 1997. Redesignated at 63 FR 987, Jan. 7, 1998]

§86.1773–99 Test sequence; general requirements.

(a) The provisions of §86.130 apply to this subpart.

(b) The following additional requirements shall also apply to this subpart:

(1) For purposes of determining conformity with 50 °F test requirements, the procedures set forth in paragraph (c) of this section shall apply. For all hybrid electric vehicles and all 1995 and subsequent model-year vehicles certifying to running loss and useful life evaporative emission standards, the test sequence specified in subpart B of this part shall apply.

(2) [Reserved]

(c)(1) Following a 12 to 36 hour cold soak at a nominal temperature of 50 °F, emissions of CO and NO_X measured on the Federal Test Procedure (subpart B of this part), conducted at a nominal test temperature of 50 °F, shall not exceed the standards for vehicles of the same emission category and vehicle type subject to a cold soak and emission test at 68 to 86 °F. For all TLEVs, emissions of NMOG and formaldehyde at 50 °F shall not exceed the 50,000 mile certification standard multiplied by a factor of 2.0. For all LEVs, emissions of NMOG and formaldehyde at 50 °F shall not exceed the 50,000 mile certification standard multiplied by a factor of 2.0. For all ULEVs, emissions of NMOG and formaldehyde at 50 °F shall not exceed the 50,000 mile certification standard multiplied by a factor of 2.0. Emissions of NMOG shall be multiplied by a reactivity adjustment factor, if any, prior to comparing with the 50,000 certification standard multiplied by the specified factor. The test vehicles shall not be subject to a diurnal heat build prior to the cold start exhaust test or evaporative emission testing.

(i) For the 50 °F emission test, the nominal preconditioning, soak, and test temperatures shall be maintained within 3 °F of the nominal temperature on an average basis and within 5 °F of the nominal temperature on a continuous basis. The temperature shall be sampled at least once every 15 seconds during the preconditioning and test periods and at least once each 5 minutes during the soak period. A continuous strip chart recording of the temperature with these minimum time resolutions is an acceptable alternative to employing a data acquisition system.

(ii) The test site temperature shall be measured at the inlet of the vehicle cooling fan used for testing.

(iii) The test vehicle may be fueled before the preconditioning procedure in a fueling area maintained within a temperature range of 68 to 86 °F. The preconditioning shall be conducted at a nominal temperature of 50 °F. The requirement to saturate the evaporative control canister(s) shall not apply.

(iv) If a soak area remote from the test site is used, the vehicle may pass through an area maintained within a temperature range of 68 to 86 °F during a time interval not to exceed 10 minutes. In such cases, the vehicle shall be restabilized to 50 °F by soaking the vehicle in the nominal 50 °F test area for six times as long as the exposure time to the higher temperature area, prior to starting the emission test.

(v) The vehicle shall be approximately level during all phases of the test sequence to prevent abnormal fuel distribution.

(2) Manufacturers shall demonstrate compliance with this requirement each year by testing at least three LDV or LDT emission data and/or engineering development vehicles (with at least 4000 miles) which are representative of the array of technologies available in that model year. Only TLEVs, LEVs, and ULEVs are to be considered for testing at 50 °F. It is not necessary to apply deterioration factors (DFs) to the 50 °F test results to comply with this requirement. Testing at 50 °F shall not be required for fuel-flexible and dual-fuel vehicles when operating on gasoline. Natural gas, hybrid electric and diesel-fueled vehicles shall also be exempt from 50 °F testing.

(3) The following schedule outlines the parameters to be considered for vehicle selection:

(i) Fuel control system (e.g., multiport fuel injection, throttle body

electronic fuel injection, sequential multiport electronic fuel injection, etc.);

(ii) Catalyst system (e.g., electrically heated catalyst, close-coupled catalyst, underfloor catalyst, etc.);

(iii) Control system type (e.g., mass-air flow, speed density, etc.);

(iv) Vehicle category (e.g., TLEV, LEV, ULEV);

(v) Fuel type (e.g., gasoline, methanol, etc.).

(4) The same engine family shall not be selected in the succeeding two years unless the manufacturer produces fewer than three engine families. If the manufacturer produces more than three TLEV, LEV, or ULEV engine families per model year, the Administrator may request 50 °F testing of specific engine families. If the manufacturer provides a list of the TLEV, LEV, and ULEV engine families that it will certify for a model year and provides a description of the technologies used on each engine family (including the vehicle selection parameters information in paragraphs (c)(3) (i) through (v) of this section), the Administrator shall select the engine families subject to 50 °F testing within a 30 day period after receiving such a list and description. The Administrator may revise the engine families selected after the 30 day period if the information provided by the manufacturer does not accurately reflect the engine families actually certified by the manufacturer.

(5) For the purposes of this section, the Administrator will accept vehicles selected and tested in accordance with the 50 °F testing procedures specified by the California Air Resources Board.

(d) A manufacturer has the option of simulating air conditioning operation during testing at other ambient test conditions provided it can demonstrate that the vehicle tailpipe exhaust emissions are representative of the emissions that would result from the SC03 cycle test procedure and the ambient conditions of paragraph 86.161–00. The Administrator has approved two optional air conditioning test simulation procedures, AC1 and AC2, for the 2001 to 2003 model years only. If a manufacturer desires to conduct an alternative SC03 test simulation other than AC1 and AC2, or the AC1 and AC2 simulations for the 2004 and subsequent model years, the simulation test procedure must be approved in advance by the Administrator.

[62 FR 31242, June 6, 1997. Redesignated and amended at 63 FR 987, Jan. 7, 1998]

§ 86.1774–99 Vehicle preconditioning.

The provisions of § 86.132 apply to this subpart, with the following exceptions and additions:

(a) The provisions of § 86.132 (a) through (e) apply to this subpart, with the following additional requirements:

(1) The UDDS performed prior to a non-regeneration emission test shall not contain a regeneration (diesel light-duty vehicles and light-duty trucks equipped with periodically regenerating trap oxidizer systems only). A gasoline fueled test vehicle may not be used to set dynamometer horsepower.

(2) [Reserved]

(b) [Reserved]

[62 FR 31242, June 6, 1997. Redesignated at 63 FR 987, Jan. 7, 1998]

§ 86.1775–99 Exhaust sample analysis.

The following requirements shall apply to TLEVs, LEVs, ULEVs, and ZEVs certified under the provisions of this subpart:

(a) The requirements in § 86.140;

(b) The requirements in Chapter 5 of the California Regulatory Requirements Applicable to the National Low Emission Vehicle Program (October, 1996). These requirements are incorporated by reference (see § 86.1).

[62 FR 31242, June 6, 1997. Redesignated at 63 FR 987, Jan. 7, 1998]

§ 86.1776–99 Records required.

(a) The provisions of § 86.142 apply to this subpart.

(b) In addition to the provisions of § 86.142, the following provisions apply to this subpart:

(1) The manufacturer shall record in the durability-data vehicle logbook, the number of regenerations that occur during the 50,000 mile durability test of each diesel light-duty vehicle and light-duty truck equipped with a periodically regenerating trap oxidizer system. The manufacturer shall include, for each regeneration: the date and

time of the start of regeneration, the duration of the regeneration, and the accumulated mileage at the start and the end of regeneration. The number of regenerations will be used in the calculation of the correction factor in §86.096–28 and subsequent model year provisions.

(2) The requirements in Chapter 5 of the California Regulatory Requirements Applicable to the National Low Emission Vehicle Program (October, 1996). These requirements are incorporated by reference (see §86.1).

(3) For additional record requirements see §§86.1770, 86.1771, 86.1772, 86.1773, 86.1774, and 86.1777.

[62 FR 31242, June 6, 1997. Redesignated at 63 FR 987, Jan. 7, 1998]

EFFECTIVE DATE NOTE: At 62 FR 31242, June 6, 1997, subpart R was added, effective Aug. 5, 1997. Section 86.1776–99 contains information collection requirements and will not become effective until approval has been given by the Office of Management and Budget.

§86.1777–99 Calculations; exhaust emissions.

The provisions of §86.144 apply to this subpart, with the following exceptions and additions:

(a) The provisions of §86.144(b) apply to this subpart, with the following additional requirement:

(1) Organic material non-methane hydrocarbon equivalent mass for ethanol vehicles:

$$OMNMHCE_{mass}=NMHC_{mass} + (13.8756/32.042) \times (CH_3OH)_{mass} + (13.8756/46.064) \times (CH_3CH_2OH)_{mass} + (13.8756/30.0262) \times (HCHO)_{mass} + (13.8756/44.048) \times (CH_3CHO)_{mass}$$

(2) [Reserved]

(b) The requirements in Chapter 5 of the California Regulatory Requirements Applicable to the National Low Emission Vehicle Program (October, 1996) apply to this subpart. These requirements are incorporated by reference (see §86.1).

(c) The provisions in appendix XV of this part and appendix XVI of this part apply to this subpart.

(d) *Reactivity adjustment factors.* (1) For the purpose of complying with the NMOG exhaust emission standards in §§86.1708 and 86.1709, the mass of NMOG emissions from a vehicle certified to operate on a fuel other than conventional gasoline, including fuel-flexible and dual-fuel vehicles when operated on a fuel other than conventional gasoline, shall be multiplied by the reactivity adjustment factor applicable to the vehicle emission control technology category and fuel. The product of the NMOG mass emission value and the reactivity adjustment factor shall be compared to the NMOG exhaust emission standards to determine compliance with the standards. In addition to the above requirements, vehicles operating on natural gas shall add to the product of the NMOG mass emission value and the reactivity adjustment factor, the product of the methane mass emission value and the methane reactivity adjustment factor. This result shall be compared to the NMOG exhaust emission standards to determine compliance with the standards for natural gas-fueled vehicles.

(2) The following reactivity adjustment factors have been established pursuant to the criteria in appendix XVII of this part:

(i) Light-duty vehicles and light-duty trucks:

Vehicle emission control technology category	Fuel	Reactivity adjustment factor
TLEVs	85% methanol, 15% gasoline blends	0.41
LEVs and ULEVs through model year 2000	85% methanol, 15% gasoline blends	0.41
TLEVs through model year 2000	Gasoline meeting the specifications of §86.1771(a)(1)	0.98
LEVs and ULEVs through model year 2000	Gasoline meeting the specifications of §86.1771(a)(1)	0.94
TLEVs through model year 2000	Fuel meeting the specifications for liquefied petroleum gas specified in Chapter 4 of the California Regulatory Requirements Applicable to the National Low Emission Vehicle Program (October, 1996).	1.00
LEVs and ULEVs through model year 2000	Fuel meeting the specifications for liquefied petroleum gas specified in Chapter 4 of the California Regulatory Requirements Applicable to the National Low Emission Vehicle Program (October, 1996).	0.50

Vehicle emission control technology category	Fuel	Reactivity adjustment factor
TLEVs through model year 2000	Fuel meeting the specifications for natural gas specified in Chapter 4 of the California Regulatory Requirements Applicable to the National Low Emission Vehicle Program (October, 1996).	1.00
LEVs and ULEVs through model year 2000	Fuel meeting the specifications for natural gas specified in Chapter 4 of the California Regulatory Requirements Applicable to the National Low Emission Vehicle Program (October, 1996).	0.43

(ii) Natural gas light-duty vehicles and light-duty trucks:

Vehicle emission control technology category	Methane reactivity adjustment factor
TLEVs	0.0043
LEVs and ULEVs	0.0047

(3) The Administrator may establish new reactivity adjustment factors pursuant to appendix XVII of this part in addition to those listed in paragraph (d)(2) of this section. The Administrator shall notify manufacturers in writing of the new reactivity adjustment factors within 30 days of their establishment.

(4) The Administrator may revise any reactivity adjustment factor listed in paragraph (d)(2) of this section or established by the Administrator pursuant to appendix XVII of this part if he or she determines that the revised reactivity adjustment factor is more representative of the ozone-forming potential of vehicle NMOG emissions based on the best available scientific knowledge and sound engineering judgment. The Administrator shall notify manufacturers in writing of any such reactivity adjustment factor at least 3 years prior to January 1 of the calendar year which has the same numerical designation as the model year for which the revised reactivity adjustment factor first becomes effective. However, manufacturers may use the revised reactivity adjustment factor in certifying any new engine family whose certification application is submitted following such notification, if they so choose. Manufacturers may also continue to use the original reactivity adjustment factor for any existing engine family previously certified with that reactivity adjustment factor until a new durability-data vehicle is tested for that engine family.

(5) Manufacturers may request the use of a unique reactivity adjustment factor for a specific vehicle emission control technology category and fuel. The Administrator shall approve such requests in accordance with the conditions and procedures of appendix XVII of this part. For the purpose of calculating the reactivity adjustment factor as specified in appendix XVII of this part, the ''g ozone potential per g NMOG'' value for the vehicle emission control technology category and fuel system for which the manufacturer is requesting the use of a unique reactivity adjustment factor shall be divided by the ''g ozone potential per g NMOG'' value for a conventional gasoline-fueled vehicle established for the vehicle emission control technology category. The following ''g ozone potential per g NMOG'' values for conventional gasoline-fueled vehicle emission control technology categories have been established:

(i) Light-duty vehicles and light-duty trucks:

Vehicle emission control technology category	''g ozone potential per g NMOG'' for conventional gasoline
All TLEVs	3.42
All 1993 and subsequent model-year LEVs and ULEVs	3.13

(ii) [Reserved]

[62 FR 31242, June 6, 1997. Redesignated at 63 FR 987, Jan. 7, 1998]

§86.1778–99 Calculations; particulate emissions.

The provisions of §86.145 and appendix XVI of this part apply to this subpart.

[62 FR 31242, June 6, 1997. Redesignated at 63 FR 987, Jan. 7, 1998]

§86.1779–99 General enforcement provisions.

(a) The provisions of sections 203–208 of the Clean Air Act, as amended, (42 U.S.C. 7522–7525, 7541–7542) apply to all motor vehicles manufactured by a covered manufacturer under this program, and to all covered manufacturers and all persons with respect to such vehicles.

(b) Violation of the requirements of this subpart shall subject a person to the jurisdiction and penalty provisions of sections 204–205 of the Clean Air Act (42 U.S.C. 7522–7523).

(c) EPA may not issue a certificate of conformity to a covered manufacturer, as defined in §86.1702, except based on compliance with the standards and requirements in this part 86 and 40 CFR part 85.

[62 FR 31242, June 6, 1997. Redesignated at 63 FR 987, Jan. 7, 1998]

§86.1780–99 Prohibited acts.

(a) The following acts and the causing thereof are prohibited:

(1) In the case of a covered manufacturer, as defined by §86.1702, of new motor vehicles or new motor vehicle engines for distribution in commerce, the sale, or the offering for sale, or the introduction, or delivery for introduction, into commerce, or (in the case of any person, except as provided by regulation of the Administrator), the importation into the United States of any new motor vehicle or new motor vehicle engine subject to this subpart, unless such vehicle or engine is covered by a certificate of conformity issued (and in effect) under regulations found in this subpart (except as provided in sec. 203(b) of the Clean Air Act (42 U.S.C. 7522(b)) or regulations promulgated thereunder).

(2)(i) For any person to fail or refuse to permit access to or copying of records or to fail to make reports or provide information required under sec. 208 of the Clean Air Act (42 U.S.C. 7542) with regard to covered vehicles.

(ii) For a person to fail or refuse to permit entry, testing, or inspection authorized under sec. 206(c) (42 U.S.C. 7525(c)) or sec. 208 of the Clean Air Act (42 U.S.C. 7542) with regard to covered vehicles.

(iii) For a person to fail or refuse to perform tests, or to have tests performed as required under sec. 208 of the Clean Air Act (42 U.S.C. 7542) with regard to covered vehicles.

(iv) For a person to fail to establish or maintain records as required under §§86.1723 and 86.1776 with regard to covered vehicles.

(v) For any manufacturer to fail to make information available as provided by regulation under sec. 202(m)(5) of the Clean Air Act (42 U.S.C. 7521(m)(5)) with regard to covered vehicles.

(3)(i) For any person to remove or render inoperative any device or element of design installed on or in a covered vehicle or engine in compliance with regulations under this subpart prior to its sale and delivery to the ultimate purchaser, or for any person knowingly to remove or render inoperative any such device or element of design after such sale and delivery to the ultimate purchaser.

(ii) For any person to manufacture, sell or offer to sell, or install, any part or component intended for use with, or as part of, any covered vehicle or engine, where a principal effect of the part or component is to bypass, defeat, or render inoperative any device or element of design installed on or in a covered vehicle or engine in compliance with regulations issued under this subpart, and where the person knows or should know that the part or component is being offered for sale or installed for this use or put to such use.

(4) For any manufacturer of a covered vehicle or engine subject to standards prescribed under this subpart:

(i) To sell, offer for sale, introduce or deliver into commerce, or lease any such vehicle or engine unless the manufacturer has complied with the requirements of sec. 207 (a) and (b) of the Clean Air Act (42 U.S.C. 7541 (a), (b)) with respect to such vehicle or engine, and unless a label or tag is affixed to

such vehicle or engine in accordance with sec. 207(c)(3) of the Clean Air Act (42 U.S.C. 7541(c)(3)).

(ii) To fail or refuse to comply with the requirements of sec. 207 (c) or (e) of the Clean Air Act (42 U.S.C. 7541 (c) or (e)).

(iii) Except as provided in sec. 207(c)(3) of the Clean Air Act (42 U.S.C. 7541(c)(3)), to provide directly or indirectly in any communication to the ultimate purchaser or any subsequent purchaser that the coverage of a warranty under the Clean Air Act is conditioned upon use of any part, component, or system manufactured by the manufacturer or a person acting for the manufacturer or under its control, or conditioned upon service performed by such persons.

(iv) To fail or refuse to comply with the terms and conditions of the warranty under sec. 207 (a) or (b) of the Clean Air Act (42 U.S.C. 7541 (a) or (b)).

(b) For the purposes of enforcement of this subpart, the following apply:

(1) No action with respect to any element of design referred to in paragraph (a)(3) of this section (including any adjustment or alteration of such element) shall be treated as a prohibited act under paragraph (a)(3) of this section if such action is in accordance with sec. 215 of the Clean Air Act (42 U.S.C. 7549);

(2) Nothing in paragraph (a)(3) of this section is to be construed to require the use of manufacturer parts in maintaining or repairing a covered vehicle or engine. For the purposes of the preceding sentence, the term ''manufacturer parts'' means, with respect to a motor vehicle engine, parts produced or sold by the manufacturer of the motor vehicle or motor vehicle engine;

(3) Actions for the purpose of repair or replacement of a device or element of design or any other item are not considered prohibited acts under paragraph (a)(3) of this section if the action is a necessary and temporary procedure, the device or element is replaced upon completion of the procedure, and the action results in the proper functioning of the device or element of design;

(4) Actions for the purpose of a conversion of a motor vehicle or motor vehicle engine for use of a clean alternative fuel (as defined in title II of the Clean Air Act) are not considered prohibited acts under paragraph (a) of this section if:

(i) The vehicle complies with the applicable standard when operating on the alternative fuel; and

(ii) In the case of engines converted to dual fuel or flexible use, the device or element is replaced upon completion of the conversion procedure, and the action results in proper functioning of the device or element when the motor vehicle operates on conventional fuel.

[62 FR 31242, June 6, 1997. Redesignated at 63 FR 987, Jan. 7, 1998]

Subpart AA—Reporting and Recordkeeping Requirements for Part 86

§ 86.2500 Reporting and recordkeeping requirements.

All reporting and recordkeeping requirements contained in part 86, except for those requirements contained in subparts G and K, have been approved by the Office of Management and Budget under control number 2060–0104.

(Secs. 202, 203, 206, 207, 208, 301a, Clean Air Act, as amended; 42 U.S.C. 7521, 7522, 7525, 7541, 7542, 7601a)

[50 FR 10648, Mar. 15, 1985]

APPENDIX I TO PART 86—URBAN DYNAMOMETER SCHEDULES

(a) EPA Urban Dynamometer Driving Schedule for Light-Duty Vehicles and Light-Duty Trucks.

EPA URBAN DYNAMOMETER DRIVING SCHEDULE

[Speed versus Time Sequence]

Time (sec.)	Speed (m.p.h.)	Time (sec.)	Speed (m.p.h.)	Time (sec.)	Speed (m.p.h.)
0	0.0	1	0.0	2	0.0
3	0.0	4	0.0	5	0.0
6	0.0	7	0.0	8	0.0
9	0.0	10	0.0	11	0.0
12	0.0	13	0.0	14	0.0
15	0.0	16	0.0	17	0.0
18	0.0	19	0.0	20	0.0
21	3.0	22	5.9	23	8.6
24	11.5	25	14.3	26	16.9
27	17.3	28	18.1	29	20.7
30	21.7	31	22.4	32	22.5
33	22.1	34	21.5	35	20.9
36	20.4	37	19.8	38	17.0
39	14.9	40	14.9	41	15.2
42	15.5	43	16.0	44	17.1

EPA URBAN DYNAMOMETER—Continued
DRIVING SCHEDULE
[Speed versus Time Sequence]

Time (sec.)	Speed (m.p.h.)	Time (sec.)	Speed (m.p.h.)	Time (sec.)	Speed (m.p.h.)
45	19.1	46	21.1	47	22.7
48	22.9	49	22.7	50	22.6
51	21.3	52	19.0	53	17.1
54	15.8	55	15.8	56	17.7
57	19.8	58	21.6	59	23.2
60	24.2	61	24.6	62	24.9
63	25.0	64	24.6	65	24.5
66	24.7	67	24.8	68	24.7
69	24.6	70	24.6	71	25.1
72	25.6	73	25.7	74	25.4
75	24.9	76	25.0	77	25.4
78	26.0	79	26.0	80	25.7
81	26.1	82	26.7	83	27.5
84	28.6	85	29.3	86	29.8
87	30.1	88	30.4	89	30.7
90	30.7	91	30.5	92	30.4
93	30.3	94	30.4	95	30.8
96	30.4	97	29.9	98	29.5
99	29.8	100	30.3	101	30.7
102	30.9	103	31.0	104	30.9
105	30.4	106	29.8	107	29.9
108	30.2	109	30.7	110	31.2
111	31.8	112	32.2	113	32.4
114	32.2	115	31.7	116	28.6
117	25.3	118	22.0	119	18.7
120	15.4	121	12.1	122	8.8
123	5.5	124	2.2	125	0.0
126	0.0	127	0.0	128	0.0
129	0.0	130	0.0	131	0.0
132	0.0	133	0.0	134	0.0
135	0.0	136	0.0	137	0.0
138	0.0	139	0.0	140	0.0
141	0.0	142	0.0	143	0.0
144	0.0	145	0.0	146	0.0
147	0.0	148	0.0	149	0.0
150	0.0	151	0.0	152	0.0
153	0.0	154	0.0	155	0.0
156	0.0	157	0.0	158	0.0
159	0.0	160	0.0	161	0.0
162	0.0	163	0.0	164	3.3
165	6.6	166	9.9	167	13.2
168	16.5	169	19.8	170	22.2
171	24.3	172	25.8	173	26.4
174	25.7	175	25.1	176	24.7
177	25.0	178	25.2	179	25.4
180	25.8	181	27.2	182	26.5
183	24.0	184	22.7	185	19.4
186	17.7	187	17.2	188	18.1
189	18.6	190	20.0	191	22.2
192	24.5	193	27.3	194	30.5
195	33.5	196	36.2	197	37.3
198	39.3	199	40.5	200	42.1
201	43.5	202	45.1	203	46.0
204	46.8	205	47.5	206	47.5
207	47.3	208	47.2	209	47.0
210	47.0	211	47.0	212	47.0
213	47.0	214	47.2	215	47.4
216	47.9	217	48.5	218	49.1
219	49.5	220	50.0	221	50.6
222	51.0	223	51.5	224	52.2
225	53.2	226	54.1	227	54.6
228	54.9	229	55.0	230	54.9
231	54.6	232	54.6	233	54.8
234	55.1	235	55.5	236	55.7
237	56.1	238	56.3	239	56.6
240	56.7	241	56.7	242	56.5
243	56.5	244	56.5	245	56.5
246	56.5	247	56.5	248	56.4
249	56.1	250	55.8	251	55.1

EPA URBAN DYNAMOMETER—Continued
DRIVING SCHEDULE
[Speed versus Time Sequence]

Time (sec.)	Speed (m.p.h.)	Time (sec.)	Speed (m.p.h.)	Time (sec.)	Speed (m.p.h.)
252	54.6	253	54.2	254	54.0
255	53.7	256	53.6	257	53.9
258	54.0	259	54.1	260	54.1
261	53.8	262	53.4	263	53.0
264	52.6	265	52.1	266	52.4
267	52.0	268	51.9	269	51.7
270	51.5	271	51.6	272	51.8
273	52.1	274	52.5	275	53.0
276	53.5	277	54.0	278	54.9
279	55.4	280	55.6	281	56.0
282	56.0	283	55.8	284	55.2
285	54.5	286	53.6	287	52.5
288	51.5	289	51.5	290	51.5
291	51.1	292	50.1	293	50.0
294	50.1	295	50.0	296	49.6
297	49.5	298	49.5	299	49.5
300	49.1	301	48.6	302	48.1
303	47.2	304	46.1	305	45.0
306	43.8	307	42.6	308	41.5
309	40.3	310	38.5	311	37.0
312	35.2	313	33.8	314	32.5
315	31.5	316	30.6	317	30.5
318	30.0	319	29.0	320	27.5
321	24.8	322	21.5	323	20.1
324	19.1	325	18.5	326	17.0
327	15.5	328	12.5	329	10.8
330	8.0	331	4.7	332	1.4
333	0.0	334	0.0	335	0.0
336	0.0	337	0.0	338	0.0
339	0.0	340	0.0	341	0.0
342	0.0	343	0.0	344	0.0
345	0.0	346	0.0	347	1.0
348	4.3	349	7.6	350	10.9
351	14.2	352	17.3	353	20.0
354	22.5	355	23.7	356	25.2
357	26.6	358	28.1	359	30.0
360	30.8	361	31.6	362	32.1
363	32.8	364	33.6	365	34.5
366	34.6	367	34.9	368	34.8
369	34.5	370	34.7	371	35.5
372	36.0	373	36.0	374	36.0
375	36.0	376	36.0	377	36.0
378	36.1	379	36.4	380	36.5
381	36.4	382	36.0	383	35.1
384	34.1	385	33.5	386	31.4
387	29.0	388	25.7	389	23.0
390	20.3	391	17.5	392	14.5
393	12.0	394	8.7	395	5.4
396	2.1	397	0.0	398	0.0
399	0.0	400	0.0	401	0.0
402	0.0	403	2.6	404	5.9
405	9.2	406	12.5	407	15.8
408	19.1	409	22.4	410	25.0
411	25.6	412	27.5	413	29.0
414	30.0	415	30.1	416	30.0
417	29.7	418	29.3	419	28.8
420	28.0	421	25.0	422	21.7
423	18.4	424	15.1	425	11.8
426	8.5	427	5.2	428	1.9
429	0.0	430	0.0	431	0.0
432	0.0	433	0.0	434	0.0
435	0.0	436	0.0	437	0.0
438	0.0	439	0.0	440	0.0
441	0.0	442	0.0	443	0.0
444	0.0	445	0.0	446	0.0
447	0.0	448	3.3	449	6.6
450	9.9	451	13.2	452	16.5
453	19.8	454	23.1	455	26.4
456	27.8	457	29.1	458	31.5

EPA URBAN DYNAMOMETER—Continued
DRIVING SCHEDULE
[Speed versus Time Sequence]

Time (sec.)	Speed (m.p.h.)	Time (sec.)	Speed (m.p.h.)	Time (sec.)	Speed (m.p.h.)
459	33.0	460	33.6	461	34.8
462	35.1	463	35.6	464	36.1
465	36.0	466	36.1	467	36.2
468	36.0	469	35.7	470	36.0
471	36.0	472	35.6	473	35.5
474	35.4	475	35.2	476	35.2
477	35.2	478	35.2	479	35.2
480	35.2	481	35.0	482	35.1
483	35.2	484	35.5	485	35.2
486	35.0	487	35.0	488	35.0
489	34.8	490	34.6	491	34.5
492	33.5	493	32.0	494	30.1
495	28.0	496	25.5	497	22.5
498	19.8	499	16.5	500	13.2
501	10.3	502	7.2	503	4.0
504	1.0	505	0.0	506	0.0
507	0.0	508	0.0	509	0.0
510	0.0	511	1.2	512	3.5
513	5.5	514	6.5	515	8.5
516	9.6	517	10.5	518	11.9
519	14.0	520	16.0	521	17.7
522	19.0	523	20.1	524	21.0
525	22.0	526	23.0	527	23.8
528	24.5	529	24.9	530	25.0
531	25.0	532	25.0	533	25.0
534	25.0	535	25.0	536	25.6
537	25.8	538	26.0	539	25.6
540	25.2	541	25.0	542	25.0
543	25.0	544	24.4	545	23.1
546	19.8	547	16.5	548	13.2
549	9.9	550	6.6	551	3.3
552	0.0	553	0.0	554	0.0
555	0.0	556	0.0	557	0.0
558	0.0	559	0.0	560	0.0
561	0.0	562	0.0	563	0.0
564	0.0	565	0.0	566	0.0
567	0.0	568	0.0	569	3.3
570	6.6	571	9.9	572	13.0
573	14.6	574	16.0	575	17.0
576	17.0	577	17.0	578	17.5
579	17.7	580	17.7	581	17.5
582	17.0	583	16.9	584	16.6
585	17.0	586	17.1	587	17.0
588	16.6	589	16.5	590	16.5
591	16.6	592	17.0	593	17.6
594	18.5	595	19.2	596	20.2
597	21.0	598	21.1	599	21.2
600	21.6	601	22.0	602	22.4
603	22.5	604	22.5	605	22.5
606	22.7	607	23.7	608	25.1
609	26.0	610	26.5	611	27.0
612	26.1	613	22.8	614	19.5
615	16.2	616	12.9	617	9.6
618	6.3	619	3.0	620	0.0
621	0.0	622	0.0	623	0.0
624	0.0	625	0.0	626	0.0
627	0.0	628	0.0	629	0.0
630	0.0	631	0.0	632	0.0
633	0.0	634	0.0	635	0.0
636	0.0	637	0.0	638	0.0
639	0.0	640	0.0	641	0.0
642	0.0	643	0.0	644	0.0
645	0.0	646	2.0	647	4.5
648	7.8	649	10.2	650	12.5
651	14.0	652	15.3	653	17.5
654	19.6	655	21.0	656	22.2
657	23.3	658	24.5	659	25.3
660	25.6	661	26.0	662	26.1
663	26.2	664	26.2	665	26.4

EPA URBAN DYNAMOMETER—Continued
DRIVING SCHEDULE
[Speed versus Time Sequence]

Time (sec.)	Speed (m.p.h.)	Time (sec.)	Speed (m.p.h.)	Time (sec.)	Speed (m.p.h.)
666	26.5	667	26.5	668	26.0
669	25.5	670	23.6	671	21.4
672	18.5	673	16.4	674	14.5
675	11.6	676	8.7	677	5.8
678	3.5	679	2.0	680	0.0
681	0.0	682	0.0	683	0.0
684	0.0	685	0.0	686	0.0
687	0.0	688	0.0	689	0.0
690	0.0	691	0.0	692	0.0
693	0.0	694	1.4	695	3.3
696	4.4	697	6.5	698	9.2
699	11.3	700	13.5	701	14.6
702	16.4	703	16.7	704	16.5
705	16.5	706	18.2	707	19.2
708	20.1	709	21.5	710	22.5
711	22.5	712	22.1	713	22.7
714	23.3	715	23.5	716	22.5
717	21.6	718	20.5	719	18.0
720	15.0	721	12.0	722	9.0
723	6.2	724	4.5	725	3.0
726	2.1	727	0.5	728	0.5
729	3.2	730	6.5	731	9.6
732	12.5	733	14.0	734	16.0
735	18.0	736	19.6	737	21.5
738	23.1	739	24.5	740	25.5
741	26.5	742	27.1	743	27.6
744	27.9	745	28.3	746	28.6
747	28.6	748	28.3	749	28.2
750	28.0	751	27.5	752	26.8
753	25.5	754	23.5	755	21.5
756	19.0	757	16.5	758	14.9
759	12.5	760	9.4	761	6.2
762	3.0	763	1.5	764	1.5
765	0.5	766	0.0	767	3.0
768	6.3	769	9.6	770	12.9
771	15.8	772	17.5	773	18.4
774	19.5	775	20.7	776	22.0
777	23.2	778	25.0	779	26.5
780	27.5	781	28.0	782	28.3
783	28.9	784	28.9	785	28.9
786	28.8	787	28.5	788	28.3
789	28.3	790	28.3	791	28.2
792	27.6	793	27.5	794	27.5
795	27.5	796	27.5	797	27.5
798	27.5	799	27.6	800	28.0
801	28.5	802	30.0	803	31.0
804	32.0	805	33.0	806	33.0
807	33.6	808	34.0	809	34.3
810	34.2	811	34.0	812	34.0
813	33.9	814	33.6	815	33.1
816	33.0	817	32.5	818	32.0
819	31.9	820	31.6	821	31.5
822	30.6	823	30.0	824	29.9
825	29.9	826	29.9	827	29.9
828	29.6	829	29.5	830	29.5
831	29.3	832	28.9	833	28.2
834	27.7	835	27.0	836	25.5
837	23.7	838	22.0	839	20.5
840	19.2	841	19.2	842	20.1
843	20.9	844	21.4	845	22.0
846	22.6	847	23.2	848	24.0
849	25.0	850	26.0	851	26.6
852	26.6	853	26.8	854	27.0
855	27.2	856	27.8	857	28.1
858	28.8	859	28.9	860	29.0
861	29.1	862	29.0	863	28.1
864	27.5	865	27.0	866	25.8
867	25.0	868	24.5	869	24.8
870	25.1	871	25.5	872	25.7

EPA URBAN DYNAMOMETER—Continued
DRIVING SCHEDULE
[Speed versus Time Sequence]

Time (sec.)	Speed (m.p.h.)	Time (sec.)	Speed (m.p.h.)	Time (sec.)	Speed (m.p.h.)
873	26.2	874	26.9	875	27.5
876	27.8	877	28.4	878	29.0
879	29.2	880	29.1	881	29.0
882	28.9	883	28.5	884	28.1
885	28.0	886	28.0	887	27.6
888	27.2	889	26.6	890	27.0
891	27.5	892	27.8	893	28.0
894	27.8	895	28.0	896	28.0
897	28.0	898	27.7	899	27.4
900	26.9	901	26.6	902	26.5
903	26.5	904	26.5	905	26.3
906	26.2	907	26.2	908	25.9
909	25.6	910	25.6	911	25.9
912	25.8	913	25.5	914	24.6
915	23.5	916	22.2	917	21.6
918	21.6	919	21.7	920	22.6
921	23.4	922	24.0	923	24.2
924	24.4	925	24.9	926	25.1
927	25.2	928	25.3	929	25.5
930	25.2	931	25.0	932	25.0
933	25.0	934	24.7	935	24.5
936	24.3	937	24.3	938	24.5
939	25.0	940	25.0	941	24.6
942	24.6	943	24.1	944	24.5
945	25.1	946	25.6	947	25.1
948	24.0	949	22.0	950	20.1
951	16.9	952	13.6	953	10.3
954	7.0	955	3.7	956	0.4
957	0.0	958	0.0	959	0.0
960	2.0	961	5.0	962	8.6
963	11.9	964	15.2	965	17.5
966	18.6	967	20.0	968	21.1
969	22.0	970	23.0	971	24.5
972	26.3	973	27.5	974	28.1
975	28.4	976	28.5	977	28.5
978	28.5	979	27.7	980	27.5
981	27.2	982	26.8	983	26.5
984	26.0	985	25.7	986	25.2
987	24.0	988	22.0	989	21.5
990	21.5	991	21.8	992	22.5
993	23.0	994	22.8	995	22.8
996	23.0	997	22.7	998	22.7
999	22.7	1000	23.5	1001	24.0
1002	24.6	1003	24.8	1004	25.1
1005	25.5	1006	25.6	1007	25.5
1008	25.0	1009	24.1	1010	23.7
1011	23.2	1012	22.9	1013	22.5
1014	22.0	1015	21.6	1016	20.5
1017	17.5	1018	14.2	1019	10.9
1020	7.6	1021	4.3	1022	1.0
1023	0.0	1024	0.0	1025	0.0
1026	0.0	1027	0.0	1028	0.0
1029	0.0	1030	0.0	1031	0.0
1032	0.0	1033	0.0	1034	0.0
1035	0.0	1036	0.0	1037	0.0
1038	0.0	1039	0.0	1040	0.0
1041	0.0	1042	0.0	1043	0.0
1044	0.0	1045	0.0	1046	0.0
1047	0.0	1048	0.0	1049	0.0
1050	0.0	1051	0.0	1052	0.0
1053	1.2	1054	4.0	1055	7.3
1056	10.6	1057	13.9	1058	17.0
1059	18.5	1060	20.0	1061	21.8
1062	23.0	1063	24.0	1064	24.8
1065	25.6	1066	26.5	1067	26.8
1068	27.4	1069	27.9	1070	28.3
1071	28.0	1072	27.5	1073	27.0
1074	27.0	1075	26.3	1076	24.5
1077	22.5	1078	21.5	1079	20.6

EPA URBAN DYNAMOMETER—Continued
DRIVING SCHEDULE
[Speed versus Time Sequence]

Time (sec.)	Speed (m.p.h.)	Time (sec.)	Speed (m.p.h.)	Time (sec.)	Speed (m.p.h.)
1080	18.0	1081	15.0	1082	12.3
1083	11.1	1084	10.6	1085	10.0
1086	9.5	1087	9.1	1088	8.7
1089	8.6	1090	8.8	1091	9.0
1092	8.7	1093	8.6	1094	8.0
1095	7.0	1096	5.0	1097	4.2
1098	2.6	1099	1.0	1100	0.0
1101	0.1	1102	0.6	1103	1.6
1104	3.6	1105	6.9	1106	10.0
1107	12.8	1108	14.0	1109	14.5
1110	16.0	1111	18.1	1112	20.0
1113	21.0	1114	21.2	1115	21.3
1116	21.4	1117	21.7	1118	22.5
1119	23.0	1120	23.8	1121	24.5
1122	25.0	1123	24.9	1124	24.8
1125	25.0	1126	25.4	1127	25.8
1128	26.0	1129	26.4	1130	26.6
1131	26.9	1132	27.0	1133	27.0
1134	27.0	1135	26.9	1136	26.8
1137	26.8	1138	26.5	1139	26.4
1140	26.0	1141	25.5	1142	24.6
1143	23.5	1144	21.5	1145	20.0
1146	17.5	1147	16.0	1148	14.0
1149	10.7	1150	7.4	1151	4.1
1152	0.8	1153	0.0	1154	0.0
1155	0.0	1156	0.0	1157	0.0
1158	0.0	1159	0.0	1160	0.0
1161	0.0	1162	0.0	1163	0.0
1164	0.0	1165	0.0	1166	0.0
1167	0.0	1168	0.0	1169	2.1
1170	5.4	1171	8.7	1172	12.0
1173	15.3	1174	18.6	1175	21.1
1176	23.0	1177	23.5	1178	23.0
1179	22.5	1180	20.0	1181	16.7
1182	13.4	1183	10.1	1184	6.8
1185	3.5	1186	0.2	1187	0.0
1188	0.0	1189	0.0	1190	0.0
1191	0.0	1192	0.0	1193	0.0
1194	0.0	1195	0.0	1196	0.0
1197	0.2	1198	1.5	1199	3.5
1200	6.5	1201	9.8	1202	12.0
1203	12.9	1204	13.0	1205	12.6
1206	12.8	1207	13.1	1208	13.1
1209	14.0	1210	15.5	1211	17.0
1212	18.6	1213	19.7	1214	21.0
1215	21.5	1216	21.8	1217	21.8
1318	21.5	1219	21.2	1220	21.5
1221	21.8	1222	22.0	1223	21.9
1224	21.7	1225	21.5	1226	21.5
1227	21.4	1228	20.1	1229	19.5
1230	19.2	1231	19.6	1232	19.8
1233	20.0	1234	19.5	1235	17.5
1236	15.5	1237	13.0	1238	10.0
1239	8.0	1240	6.0	1241	4.0
1242	2.5	1243	0.7	1244	0.0
1245	0.0	1246	0.0	1247	0.0
1248	0.0	1249	0.0	1250	0.0
1251	0.0	1252	1.0	1253	1.0
1254	1.0	1255	1.0	1256	1.0
1257	1.6	1258	3.0	1259	4.0
1260	5.0	1261	6.3	1262	8.0
1263	10.0	1264	10.5	1265	9.5
1266	8.5	1267	7.6	1268	8.8
1269	11.0	1270	14.0	1271	17.0
1272	19.5	1273	21.0	1274	21.8
1275	22.2	1276	23.0	1277	23.6
1278	24.1	1279	24.5	1280	24.5
1281	24.0	1282	23.5	1283	23.5
1284	23.5	1285	23.5	1286	23.5

EPA URBAN DYNAMOMETER—Continued
DRIVING SCHEDULE
[Speed versus Time Sequence]

Time (sec.)	Speed (m.p.h.)	Time (sec.)	Speed (m.p.h.)	Time (sec.)	Speed (m.p.h.)
1287	23.5	1288	24.0	1289	24.1
1290	24.5	1291	24.7	1292	25.0
1293	25.4	1294	25.6	1295	25.7
1296	26.0	1297	26.2	1298	27.0
1299	27.8	1300	28.3	1301	29.0
1302	29.1	1303	29.0	1304	28.0
1305	24.7	1306	21.4	1307	18.1
1308	14.8	1309	11.5	1310	8.2
1311	4.9	1312	1.6	1313	0.0
1314	0.0	1315	0.0	1316	0.0
1317	0.0	1318	0.0	1319	0.0
1320	0.0	1321	0.0	1322	0.0
1323	0.0	1324	0.0	1325	0.0
1326	0.0	1327	0.0	1328	0.0
1329	0.0	1330	0.0	1331	0.0
1332	0.0	1333	0.0	1334	0.0
1335	0.0	1336	0.0	1337	0.0
1338	1.5	1339	4.8	1340	8.1
1341	11.4	1342	13.2	1343	15.1
1344	16.8	1345	18.8	1346	19.5
1347	20.3	1348	21.3	1349	21.9
1350	22.1	1351	22.4	1352	22.0
1353	21.6	1354	21.1	1355	20.5
1356	20.0	1357	19.6	1358	18.5
1359	17.5	1360	16.5	1361	15.5
1362	14.0	1363	11.0	1364	8.0
1365	5.2	1366	2.5	1367	0.0
1368	0.0	1369	0.0	1370	0.0
1371	0.0	1372	0.0	.....	.....

The diagrams below show the range of acceptable speed tolerances for typical points. The curve on the left is typical of portions of the speed curve which are increasing or decreasing throughout the 2 second time interval. The curve on the right is typical of portions of the speed curve which include a maximum or minimum value.

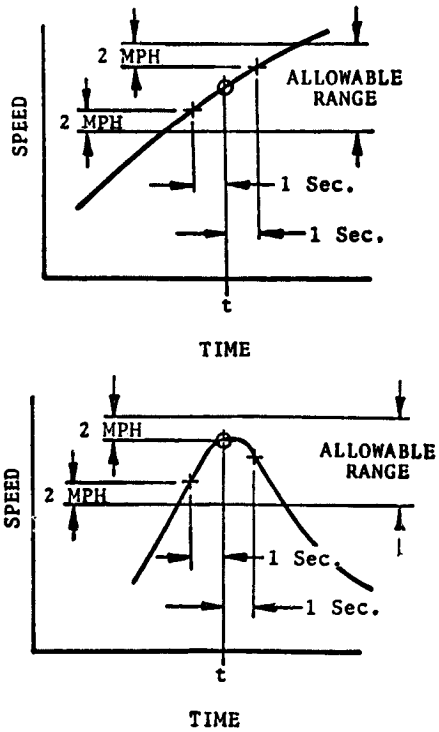

(b) EPA Urban Dynamometer Driving Schedule for Light-Duty Vehicles, Light-Duty Trucks, and Motorcycles with engine displacements equal to or greater than 170 cc (10.4 cu. in.).

SPEED VERSUS TIME SEQUENCE

Time (seconds)	Speed (kilometers per hour)
0	0
1	0
2	0
3	0
4	0
5	0
6	0
7	0
8	0
9	0
10	0
11	0
12	0
13	0
14	0
15	0

SPEED VERSUS TIME SEQUENCE—Continued

Time (seconds)	Speed (kilometers per hour)
16	0
17	0
18	0
19	0
20	0
21	4.8
22	9.5
23	13.8
24	18.5
25	23.0
26	27.2
27	27.8
28	29.1
29	33.3
30	34.9
31	36.0
32	36.2
33	35.6
34	34.6
35	33.6
36	32.8
37	31.9
38	27.4
39	24.0
40	24.0
41	24.5
42	24.9
43	25.7
44	27.5
45	30.7
46	34.0
47	36.5
48	36.9
49	36.5
50	36.4
51	34.3
52	30.6
53	27.5
54	25.4
55	25.4
56	28.5
57	31.9
58	34.8
59	37.3
60	38.9
61	39.6
62	40.1
63	40.2
64	39.6
65	39.4
66	39.8
67	39.9
68	39.8
69	39.6
70	39.6
71	40.4
72	41.2
73	41.4
74	40.9
75	40.1
76	40.2
77	40.9
78	41.8
79	41.8
80	41.4
81	42.0
82	43.0
83	44.3
84	46.0
85	47.2

SPEED VERSUS TIME SEQUENCE—Continued

Time (seconds)	Speed (kilometers per hour)
86	48.0
87	48.4
88	48.9
89	49.4
90	49.4
91	49.1
92	48.9
93	48.8
94	48.9
95	49.6
96	48.9
97	48.1
98	47.5
99	48.0
100	48.8
101	49.4
102	49.7
103	49.9
104	49.7
105	48.9
106	48.0
107	48.1
108	48.6
109	49.4
110	50.2
111	51.2
112	51.8
113	52.1
114	51.8
115	51.0
116	46.0
117	40.7
118	35.4
119	30.1
120	24.8
121	19.5
122	14.2
123	8.9
124	3.5
125	0
126	0
127	0
128	0
129	0
130	0
131	0
132	0
133	0
134	0
135	0
136	0
137	0
138	0
139	0
140	0
141	0
142	0
143	0
144	0
145	0
146	0
147	0
148	0
149	0
150	0
151	0
152	0
153	0
154	0
155	0

SPEED VERSUS TIME SEQUENCE—Continued

Time (seconds)	Speed (kilometers per hour)
156	0
157	0
158	0
159	0
160	0
161	0
162	0
163	0
164	5.3
165	10.6
166	15.9
167	21.2
168	26.6
169	31.9
170	35.7
171	39.1
172	41.5
173	42.5
174	41.4
175	40.4
176	39.8
177	40.2
178	40.6
179	40.9
180	41.5
181	43.8
182	42.6
183	38.6
184	36.5
185	31.2
186	28.5
187	27.7
188	29.1
189	29.9
190	32.2
191	35.7
192	39.4
193	43.9
194	49.1
195	53.9
196	58.3
197	60.0
198	63.2
199	65.2
200	67.8
201	70.0
202	72.6
203	74.0
204	75.3
205	76.4
206	76.4
207	76.1
208	76.0
209	75.6
210	75.6
211	75.6
212	75.6
213	75.6
214	76.0
215	76.3
216	77.1
217	78.1
218	79.0
219	79.7
220	80.5
221	81.4
222	82.1
223	82.9
224	84.0
225	85.6

SPEED VERSUS TIME SEQUENCE—Continued

Time (seconds)	Speed (kilometers per hour)
226	87.1
227	87.9
228	88.4
229	88.5
230	88.4
231	87.9
232	87.9
233	88.2
234	88.7
235	89.3
236	89.6
237	90.3
238	90.6
239	91.1
240	91.2
241	91.2
242	90.9
243	90.9
244	90.9
245	90.9
246	90.9
247	90.9
248	90.8
249	90.3
250	89.8
251	88.7
252	87.9
253	87.2
254	86.9
255	86.4
256	86.3
257	86.7
258	86.9
259	87.1
260	87.1
261	86.6
262	85.9
263	85.3
264	84.7
265	83.8
266	84.3
267	83.7
268	83.5
269	83.2
270	82.9
271	83.0
272	83.4
273	83.8
274	84.5
275	85.3
276	86.1
277	86.9
278	88.4
279	89.2
280	89.5
281	90.1
282	90.1
283	89.8
284	88.8
285	87.7
286	86.3
287	84.5
288	82.9
289	82.9
290	82.9
291	82.2
292	80.6
293	80.5
294	80.6
295	80.5

SPEED VERSUS TIME SEQUENCE—Continued

Time (seconds)	Speed (kilometers per hour)
296	79.8
297	79.7
298	79.7
299	79.7
300	79.0
301	78.2
302	77.4
303	76.0
304	74.2
305	72.4
306	70.5
307	68.6
308	66.8
309	64.9
310	62.0
311	59.5
312	56.6
313	54.4
314	52.3
315	50.7
316	49.2
317	49.1
318	48.3
319	46.7
320	44.3
321	39.9
322	34.6
323	32.3
324	30.7
325	29.8
326	27.4
327	24.9
328	20.1
329	17.4
330	12.9
331	7.6
332	2.3
333	0
334	0
335	0
336	0
337	0
338	0
339	0
340	0
341	0
342	0
343	0
344	0
345	0
346	0
347	1.6
348	6.9
349	12.2
350	17.5
351	22.9
352	27.8
353	32.2
354	36.2
355	38.1
356	40.6
357	42.8
358	45.2
359	48.3
360	49.6
361	50.9
362	51.7
363	52.3
364	54.1
365	55.5

SPEED VERSUS TIME SEQUENCE—Continued

Time (seconds)	Speed (kilometers per hour)
366	55.7
367	56.2
368	56.0
369	55.5
370	55.8
371	57.1
372	57.9
373	57.9
374	57.9
375	57.9
377	57.9
376	57.9
378	58.1
379	58.6
380	58.7
381	58.6
382	57.9
383	56.5
384	54.9
385	53.9
386	50.5
387	46.7
388	41.4
389	37.0
390	32.7
391	28.2
392	23.3
393	19.3
394	14.0
395	8.7
396	3.4
397	0
398	0
399	0
400	0
401	0
402	0
403	4.2
404	9.5
405	14.5
406	20.1
407	25.4
408	30.7
409	36.0
410	40.2
411	41.2
412	44.3
413	46.7
414	48.3
415	48.4
416	48.3
417	47.8
418	47.2
419	46.3
420	45.1
421	40.2
422	34.9
423	29.6
424	24.3
425	19.0
426	13.7
427	8.4
428	3.1
429	0
430	0
431	0
432	0
433	0
434	0
435	0

SPEED VERSUS TIME SEQUENCE—Continued

Time (seconds)	Speed (kilometers per hour)
436	0
437	0
438	0
439	0
440	0
441	0
442	0
443	0
444	0
445	0
446	0
447	0
448	5.3
449	10.6
450	15.9
451	21.2
452	26.6
453	31.0
454	37.2
455	42.5
456	44.7
457	46.8
458	50.7
459	53.1
460	54.1
461	56.0
462	56.5
463	57.3
464	58.1
465	57.9
466	58.1
467	58.3
468	57.9
469	57.5
470	57.9
471	57.9
472	57.3
473	57.1
474	57.0
475	56.6
476	56.6
477	56.6
478	56.6
479	56.6
480	56.6
481	56.3
482	56.5
483	56.6
484	57.1
485	56.6
486	56.3
487	56.3
488	56.3
489	56.0
490	55.7
491	55.8
492	53.9
493	51.5
494	48.4
495	45.1
496	41.0
497	36.2
498	31.9
499	26.6
500	21.2
501	16.6
502	11.6
503	6.4
504	1.6
505	0

SPEED VERSUS TIME SEQUENCE—Continued

Time (seconds)	Speed (kilometers per hour)
506	0
507	0
508	0
509	0
510	0
511	1.9
512	5.6
513	8.9
514	10.5
515	13.7
516	15.4
517	16.9
518	19.2
519	22.5
520	25.7
521	28.5
522	30.6
523	32.3
524	33.8
525	35.4
526	37.0
527	38.3
528	39.4
529	40.1
530	40.2
531	40.2
532	40.2
533	40.2
534	40.2
535	40.2
536	41.2
537	41.5
538	41.8
539	41.2
540	40.6
541	40.2
542	40.2
543	40.2
544	39.3
545	37.2
546	31.9
547	26.6
548	21.2
549	15.9
550	10.6
551	5.3
552	0
553	0
554	0
555	0
556	0
557	0
558	0
559	0
560	0
561	0
562	0
563	0
564	0
565	0
566	0
567	0
568	0
569	5.3
570	10.6
571	15.9
572	20.9
573	23.5
574	25.7
575	27.4

SPEED VERSUS TIME SEQUENCE—Continued

Time (seconds)	Speed (kilometers per hour)
576	27.4
577	21.4
578	28.2
579	28.5
580	28.5
581	28.2
582	27.4
583	27.2
584	26.7
585	27.4
586	27.5
587	27.4
588	26.7
589	26.6
590	26.6
591	26.7
592	27.4
593	28.3
594	29.8
595	30.9
596	32.5
597	33.8
598	34.0
599	34.1
600	34.8
601	35.4
602	36.0
603	36.2
604	36.2
605	36.2
606	36.5
607	38.1
608	40.4
609	41.8
610	42.6
611	43.5
612	42.0
613	36.7
614	31.4
615	26.1
616	20.8
617	15.4
618	10.1
619	4.8
620	0
621	0
622	0
623	0
624	0
625	0
626	0
627	0
628	0
629	0
630	0
631	0
632	0
633	0
634	0
635	0
636	0
637	0
638	0
639	0
640	0
641	0
642	0
643	0
644	0
645	0

SPEED VERSUS TIME SEQUENCE—Continued

Time (seconds)	Speed (kilometers per hour)
646	3.2
647	7.2
648	12.6
649	16.4
650	20.1
651	22.5
652	24.6
653	28.2
654	31.5
655	33.8
656	35.7
657	37.5
658	39.4
659	40.7
660	41.2
661	41.8
662	43.9
663	43.1
664	42.3
665	42.5
666	42.6
667	42.6
668	41.8
669	41.0
670	38.0
671	34.4
672	29.8
673	26.4
674	23.3
675	18.7
676	14.0
677	9.3
678	5.6
679	3.2
680	0
681	0
682	0
683	0
684	0
685	0
686	0
687	0
688	0
689	0
690	0
691	0
692	0
693	0
694	2.3
695	5.3
696	7.1
697	10.5
698	14.8
699	18.2
700	21.7
701	23.5
702	26.4
703	26.9
704	26.6
705	26.6
706	29.3
707	30.9
708	32.3
709	34.6
710	36.2
711	36.2
712	35.6
713	36.5
714	37.5
715	37.8

SPEED VERSUS TIME SEQUENCE—Continued

Time (seconds)	Speed (kilometers per hour)
716	36.2
717	34.8
718	33.0
719	29.0
720	24.1
721	19.3
722	14.5
723	10.0
724	7.2
725	4.8
726	3.4
727	0.8
728	0.8
729	5.1
730	10.5
731	15.4
732	20.1
733	22.5
734	25.7
735	29.0
736	31.5
737	34.6
738	37.2
739	39.4
740	41.0
741	42.6
742	43.6
743	44.4
744	44.9
745	45.5
746	46.0
747	46.0
748	45.5
749	45.4
750	45.1
751	44.3
752	43.1
753	41.0
754	37.8
755	34.6
756	30.6
757	26.6
758	24.0
759	20.1
760	15.1
761	10.0
762	4.8
763	2.4
764	2.4
765	0.8
766	0
767	4.8
768	10.1
769	15.4
770	20.8
771	25.4
772	28.2
773	29.6
774	31.4
775	33.3
776	35.4
777	37.3
778	40.2
779	42.6
780	44.3
781	45.1
782	45.5
783	46.5
784	46.5
785	46.5

SPEED VERSUS TIME SEQUENCE—Continued

Time (seconds)	Speed (kilometers per hour)
786	46.3
787	45.9
788	45.5
789	45.5
790	45.5
791	45.4
792	44.4
793	44.3
794	44.3
795	44.3
796	44.3
797	44.3
798	44.3
799	44.4
800	45.1
801	45.9
802	48.3
803	49.9
804	51.5
805	53.1
806	53.1
807	54.1
808	54.7
809	55.2
810	55.0
811	54.7
812	54.7
813	54.6
814	54.1
815	53.3
816	53.1
817	52.3
818	51.5
819	51.3
820	50.9
821	50.7
822	49.2
823	48.3
824	48.1
825	48.1
826	48.1
827	48.1
828	47.6
829	47.5
830	47.5
831	47.2
832	46.5
833	45.4
834	44.6
835	43.5
836	41.0
837	38.1
838	35.4
839	33.0
840	30.9
841	30.9
842	32.3
843	33.6
844	34.4
845	35.4
846	36.4
847	37.3
848	38.6
849	40.2
850	41.8
851	42.8
852	42.8
853	43.1
854	43.5
855	43.8

SPEED VERSUS TIME SEQUENCE—Continued

Time (seconds)	Speed (kilometers per hour)
856	44.7
857	45.2
858	46.3
859	46.5
860	46.7
861	46.8
862	46.7
863	45.2
864	44.3
865	43.5
866	41.5
867	40.2
868	39.4
869	39.9
870	40.4
871	41.0
872	41.4
873	42.2
874	43.3
875	44.3
876	44.7
877	45.7
878	46.7
879	47.0
880	46.8
881	46.7
882	46.5
883	45.9
884	45.2
885	45.1
886	45.1
887	44.4
888	43.8
889	42.8
890	43.5
891	44.3
892	44.7
893	45.1
894	44.7
895	45.1
896	45.1
897	45.1
898	44.6
899	44.1
900	43.3
901	42.8
902	42.6
903	42.6
904	42.6
905	42.3
906	42.2
907	42.2
908	41.7
909	41.2
910	41.2
911	41.7
912	41.5
913	41.0
914	39.6
915	37.8
916	35.7
917	34.8
918	34.8
919	34.9
920	36.4
921	37.7
922	38.6
923	38.9
924	39.3
925	40.1

SPEED VERSUS TIME SEQUENCE—Continued

Time (seconds)	Speed (kilometers per hour)
926	40.4
927	40.6
928	40.7
929	41.0
930	40.6
931	40.2
932	40.3
933	40.2
934	39.8
935	39.4
936	39.1
937	39.1
938	39.4
939	40.2
940	40.2
941	39.6
942	39.6
943	38.8
944	39.4
945	40.4
946	41.2
947	40.4
948	38.6
949	35.4
950	32.3
951	27.2
952	21.9
953	16.6
954	11.3
955	6.0
956	0.6
957	0
958	0
959	0
960	3.2
961	8.5
962	13.8
963	19.2
964	24.5
965	28.2
966	29.9
967	32.2
968	34.0
969	35.4
970	37.0
971	39.4
972	42.3
973	44.3
974	45.2
975	45.7
976	45.9
977	45.9
978	45.9
979	44.6
980	44.3
981	43.8
982	43.1
983	42.6
984	41.8
985	41.4
986	40.6
987	38.6
988	35.4
989	34.6
990	34.6
991	35.1
992	36.2
993	37.0
994	36.7
995	36.7

SPEED VERSUS TIME SEQUENCE—Continued

Time (seconds)	Speed (kilometers per hour)
996	37.0
997	36.5
998	36.5
999	36.5
1,000	37.8
1,001	38.6
1,002	39.6
1,003	39.9
1,004	40.4
1,005	41.0
1,006	41.2
1,007	41.0
1,008	40.2
1,009	38.8
1,010	38.1
1,011	37.3
1,012	36.9
1,013	36.2
1,014	35.4
1,015	34.8
1,016	33.0
1,017	28.2
1,018	22.9
1,019	17.5
1,020	12.2
1,021	6.9
1,022	1.6
1,023	0
1,024	0
1,025	0
1,026	0
1,027	0
1,028	0
1,029	0
1,030	0
1,031	0
1,032	0
1,033	0
1,034	0
1,035	0
1,036	0
1,037	0
1,038	0
1,039	0
1,040	0
1,041	0
1,042	0
1,043	0
1,044	0
1,045	0
1,046	0
1,047	0
1,048	0
1,049	0
1,050	0
1,051	0
1,052	0
1,053	1.9
1,054	6.4
1,055	11.7
1,056	17.1
1,057	22.4
1,058	27.4
1,059	29.8
1,060	32.2
1,061	35.1
1,062	37.0
1,063	38.6
1,064	39.9
1,065	41.2

SPEED VERSUS TIME SEQUENCE—Continued

Time (seconds)	Speed (kilometers per hour)
1,066	42.6
1,067	43.1
1,068	44.1
1,069	44.9
1,070	45.5
1,071	45.1
1,072	44.3
1,073	43.5
1,074	43.5
1,075	42.3
1,076	39.4
1,077	36.2
1,078	34.6
1,079	33.2
1,080	29.0
1,081	24.1
1,082	19.8
1,083	17.9
1,084	17.1
1,085	16.1
1,086	15.3
1,087	14.6
1,088	14.0
1,089	13.8
1,090	14.2
1,091	14.5
1,092	14.0
1,093	13.8
1,094	12.9
1,095	11.3
1,096	8.0
1,097	6.8
1,098	4.2
1,099	1.6
1,100	0
1,101	0.2
1,102	1.0
1,103	2.6
1,104	5.8
1,105	11.1
1,106	16.1
1,107	20.6
1,108	22.5
1,109	23.3
1,110	25.7
1,111	29.1
1,112	32.2
1,113	33.8
1,114	34.1
1,115	34.3
1,116	34.4
1,117	34.9
1,118	36.2
1,119	37.0
1,120	38.3
1,121	39.4
1,122	40.2
1,123	40.1
1,124	39.9
1,125	40.2
1,126	40.9
1,127	41.5
1,128	41.8
1,129	42.5
1,130	42.8
1,131	43.3
1,132	43.5
1,133	43.5
1,134	43.5
1,135	43.3

SPEED VERSUS TIME SEQUENCE—Continued

Time (seconds)	Speed (kilometers per hour)
1,136	43.1
1,137	43.1
1,138	42.6
1,139	42.5
1,140	41.8
1,141	41.0
1,142	39.6
1,143	37.8
1,144	34.6
1,145	32.2
1,146	28.2
1,147	25.7
1,148	22.5
1,149	17.2
1,150	11.9
1,151	6.6
1,152	1.3
1,153	0
1,154	0
1,155	0
1,156	0
1,157	0
1,158	0
1,159	0
1,160	0
1,161	0
1,162	0
1,163	0
1,164	0
1,165	0
1,166	0
1,167	0
1,168	0
1,169	3.4
1,170	8.7
1,171	14.0
1,172	19.3
1,173	24.6
1,174	29.9
1,175	34.0
1,176	37.0
1,177	37.8
1,178	37.0
1,179	36.2
1,180	32.2
1,181	26.9
1,182	21.6
1,183	16.3
1,184	10.9
1,185	5.6
1,186	0.3
1,187	0
1,188	0
1,189	0
1,190	0
1,191	0
1,192	0
1,193	0
1,194	0
1,195	0
1,196	0
1,197	0.3
1,198	2.4
1,199	5.6
1,200	10.5
1,201	15.8
1,202	19.3
1,203	20.8
1,204	20.9
1,205	20.3

SPEED VERSUS TIME SEQUENCE—Continued

Time (seconds)	Speed (kilometers per hour)
1,206	20.6
1,207	21.1
1,208	21.1
1,209	22.5
1,210	24.9
1,211	27.4
1,212	29.9
1,213	31.7
1,214	33.8
1,215	34.6
1,216	35.1
1,217	35.1
1,218	34.6
1,219	34.1
1,220	34.6
1,221	35.1
1,222	35.4
1,223	35.2
1,224	34.9
1,225	34.6
1,226	34.6
1,227	34.4
1,228	32.3
1,229	31.4
1,230	30.9
1,231	31.5
1,232	31.9
1,233	32.2
1,234	31.4
1,235	28.2
1,236	24.9
1,237	20.9
1,238	16.1
1,239	12.9
1,240	9.7
1,241	6.4
1,242	4.0
1,243	1.1
1,244	0
1,245	0
1,246	0
1,247	0
1,248	0
1,249	0
1,250	0
1,251	0
1,252	1.6
1,253	1.6
1,254	1.6
1,255	1.6
1,256	1.6
1,257	2.6
1,258	4.8
1,259	6.4
1,260	8.0
1,261	10.1
1,262	12.9
1,263	16.1
1,264	16.9
1,265	15.3
1,266	13.7
1,267	12.2
1,268	14.2
1,269	17.7
1,270	22.5
1,271	27.4
1,272	31.4
1,273	33.8
1,274	35.1
1,275	35.7

SPEED VERSUS TIME SEQUENCE—Continued

Time (seconds)	Speed (kilometers per hour)
1,276	37.0
1,277	38.0
1,278	38.8
1,279	39.4
1,280	39.4
1,281	38.6
1,282	37.8
1,283	37.8
1,284	37.8
1,285	37.8
1,286	37.8
1,287	37.8
1,288	38.6
1,289	38.8
1,290	39.4
1,291	39.8
1,292	40.2
1,293	40.9
1,294	41.2
1,295	41.4
1,296	41.8
1,297	42.2
1,298	43.5
1,299	44.7
1,300	45.5
1,301	46.7
1,302	46.8
1,303	46.7
1,304	45.1
1,305	39.8
1,306	34.4
1,307	29.1
1,308	23.8
1,309	18.5
1,310	13.2
1,311	7.9
1,312	2.6
1,313	0
1,314	0
1,315	0
1,316	0
1,317	0
1,318	0
1,319	0
1,320	0
1,321	0
1,322	0
1,323	0
1,324	0
1,325	0
1,326	0
1,327	0
1,328	0
1,329	0
1,330	0
1,331	0
1,332	0
1,333	0
1,334	0
1,335	0
1,336	0
1,337	0
1,338	2.4
1,339	7.7
1,340	13.0
1,341	18.3
1,342	21.2
1,343	24.3
1,344	27.0
1,345	29.5

SPEED VERSUS TIME SEQUENCE—Continued

Time (seconds)	Speed (kilometers per hour)
1,346	31.4
1,347	32.7
1,348	34.3
1,349	35.2
1,350	35.6
1,351	36.0
1,352	35.4
1,353	34.8
1,354	34.0
1,355	33.0
1,356	32.2
1,357	31.5
1,358	29.8
1,359	28.2
1,360	26.6
1,361	24.9
1,362	22.5
1,363	17.7
1,364	12.9
1,365	8.4
1,366	4.0
1,367	0
1,368	0
1,369	0
1,370	0
1,371	0

(c) EPA Urban Dynamometer Driving Schedule for motorcycles with engine displacements less than 170 cc (10.4 cu. in.).

SPEED VERSUS TIME SEQUENCE

Time (seconds)	Speed (kilometers per hour)
1	0
2	0
3	0
4	0
5	0
6	0
7	0
8	0
9	0
10	0
11	0
12	0
13	0
14	0
15	0
16	0
17	0
18	0
19	0
20	0
21	4.8
22	9.5
23	13.8
24	18.5
25	23.0
26	27.2
27	27.8
28	29.1
29	33.3
30	34.9
31	36.0
32	36.2
33	35.6

SPEED VERSUS TIME SEQUENCE—Continued

Time (seconds)	Speed (kilometers per hour)
34	34.6
35	33.6
36	32.8
37	31.9
38	27.4
39	24.0
40	24.0
41	24.5
42	24.9
43	25.7
44	27.5
45	30.7
46	34.0
47	36.5
48	36.9
49	36.5
50	36.4
51	34.3
52	30.6
53	27.5
54	25.4
55	25.4
56	28.6
57	31.9
58	34.8
59	37.3
60	38.9
61	39.6
62	40.1
63	40.2
64	39.6
65	39.4
66	39.8
67	39.9
68	39.8
69	39.6
70	39.6
71	40.4
72	41.2
73	41.4
74	40.9
75	40.1
76	40.2
77	40.9
78	41.8
79	41.8
80	41.4
81	42.0
82	43.0
83	44.3
84	46.0
85	47.2
86	48.0
87	48.4
88	48.9
89	49.4
90	49.4
91	49.1
92	48.9
93	48.8
94	48.9
95	49.6
96	48.9
97	48.1
98	47.5
99	48.0
100	48.8
101	49.4
102	49.7
103	49.9

SPEED VERSUS TIME SEQUENCE—Continued

Time (seconds)	Speed (kilometers per hour)
104	49.7
105	48.9
106	48.0
107	48.1
108	48.6
109	49.4
110	50.2
111	51.2
112	51.8
113	52.1
114	51.8
115	51.0
116	46.0
117	40.7
118	35.4
119	30.1
120	24.8
121	19.5
122	14.2
123	8.9
124	3.5
125	0
126	0
127	0
128	0
129	0
130	0
131	0
132	0
133	0
134	0
135	0
136	0
137	0
138	0
139	0
140	0
141	0
142	0
143	0
144	0
145	0
146	0
147	0
148	0
149	0
150	0
151	0
152	0
153	0
154	0
155	0
156	0
157	0
158	0
159	0
160	0
161	0
162	0
163	0
164	3.4
165	6.8
166	10.3
167	13.7
168	17.1
169	20.5
170	23.0
171	25.2
172	26.7
173	27.4

SPEED VERSUS TIME SEQUENCE—Continued

Time (seconds)	Speed (kilometers per hour)
174	26.6
175	26.0
176	25.6
177	25.9
178	26.1
179	26.3
180	26.7
181	28.2
182	27.5
183	24.9
184	23.5
185	20.1
186	18.3
187	17.8
188	18.8
189	19.3
190	20.7
191	23.0
192	25.4
193	28.3
194	31.6
195	34.7
196	37.5
197	38.6
198	40.7
199	42.0
200	43.6
201	45.1
202	46.7
203	47.7
204	48.5
205	49.2
206	49.2
207	49.0
208	48.9
209	48.7
210	48.7
211	48.7
212	48.7
213	48.7
214	48.9
215	49.1
216	49.6
217	50.2
218	50.9
219	51.3
220	51.8
221	52.4
222	52.8
223	53.4
224	54.1
225	55.1
226	56.0
227	56.6
228	56.9
229	57.0
230	56.9
231	56.6
232	56.6
233	56.8
234	57.1
235	57.5
236	57.7
237	58.1
238	58.3
239	58.6
240	58.7
241	58.7
242	58.5
243	58.5

SPEED VERSUS TIME SEQUENCE—Continued

Time (seconds)	Speed (kilometers per hour)
244	58.5
245	58.5
246	58.5
247	58.5
248	58.4
249	58.1
250	57.8
251	57.1
252	56.6
253	56.2
254	55.9
255	55.6
256	55.5
257	55.8
258	55.9
259	56.0
260	56.0
261	55.7
262	55.3
263	54.9
264	54.5
265	54.0
266	54.3
267	53.9
268	53.8
269	53.6
270	53.4
271	53.5
272	53.7
273	54.0
274	54.4
275	54.9
276	55.4
277	55.9
278	56.9
279	57.4
280	57.6
281	58.0
282	58.0
283	57.8
284	57.2
285	56.5
286	55.5
287	54.4
288	53.4
289	53.4
290	53.4
291	52.9
292	51.9
293	51.8
294	51.9
295	51.8
296	51.4
297	51.3
298	51.3
299	51.3
300	50.9
301	50.3
302	49.8
303	48.9
304	47.8
305	46.6
306	45.4
307	44.1
308	43.0
309	41.8
310	39.9
311	38.3
312	36.5
313	35.0

SPEED VERSUS TIME SEQUENCE—Continued

Time (seconds)	Speed (kilometers per hour)
314	33.7
315	32.6
316	31.7
317	31.6
318	31.1
319	30.0
320	28.5
321	25.7
322	22.3
323	20.8
324	19.8
325	19.2
326	17.6
327	16.1
328	12.9
329	11.2
330	8.3
331	4.9
332	1.5
333	0
334	0
335	0
336	0
337	0
338	0
339	0
340	0
341	0
342	0
343	0
344	0
345	0
346	0
347	1.6
348	6.9
349	12.2
350	17.5
351	22.9
352	27.8
353	32.2
354	36.2
355	38.1
356	40.6
357	42.8
358	45.2
359	48.3
360	49.6
361	50.9
362	51.7
363	52.8
364	54.1
365	55.5
366	55.7
367	56.2
368	56.0
369	55.5
370	55.8
371	57.1
372	57.9
373	57.9
374	57.9
375	57.9
376	57.9
377	57.9
378	58.1
379	58.6
380	58.7
381	58.6
382	57.9
383	56.5

SPEED VERSUS TIME SEQUENCE—Continued

Time (seconds)	Speed (kilometers per hour)
384	54.9
385	53.9
386	50.5
387	46.7
388	41.4
389	37.0
390	32.7
391	26.2
392	23.3
393	19.3
394	14.0
395	8.7
396	3.4
397	0
398	0
399	0
400	0
401	0
402	0
403	4.2
404	9.5
405	14.8
406	20.1
407	25.4
408	30.7
409	36.0
410	40.2
411	41.2
412	44.3
413	46.7
414	48.3
415	48.4
416	48.3
417	47.8
418	47.2
419	46.3
420	45.1
421	40.2
422	34.9
423	29.6
424	24.3
425	19.0
426	13.7
427	8.4
428	3.1
429	0
430	0
431	0
432	0
433	0
434	0
435	0
436	0
437	0
438	0
439	0
440	0
441	0
442	0
443	0
444	0
445	0
446	0
447	0
448	5.3
449	10.6
450	15.9
451	21.2
452	26.6
453	31.9

SPEED VERSUS TIME SEQUENCE—Continued

Time (seconds)	Speed (kilometers per hour)
454	37.2
455	42.5
456	44.7
457	46.8
458	50.7
459	53.1
460	54.1
461	56.0
462	56.5
463	57.3
464	58.1
465	57.9
466	58.1
467	58.3
468	57.9
469	57.5
470	57.9
471	57.9
472	57.3
473	57.1
474	57.0
475	56.6
476	56.6
477	56.6
478	56.6
479	56.6
480	56.6
481	56.3
482	56.5
483	56.6
484	57.1
485	56.6
486	56.3
487	56.3
488	56.3
489	56.0
490	55.7
491	55.5
492	53.9
493	51.5
494	48.4
495	45.1
496	41.0
497	36.2
498	31.9
499	26.6
500	21.2
501	16.6
502	11.6
503	6.4
504	1.6
505	0
506	0
507	0
508	0
509	0
510	0
511	1.9
512	5.6
513	8.9
514	10.5
515	13.7
516	15.4
517	16.9
518	19.2
519	22.5
520	25.7
521	28.5
522	30.6
523	32.3

SPEED VERSUS TIME SEQUENCE—Continued

Time (seconds)	Speed (kilometers per hour)
524	33.8
525	35.4
526	37.0
527	38.3
528	39.4
529	40.1
530	40.2
531	40.2
532	40.2
533	40.2
534	40.2
535	40.2
536	41.2
537	41.5
538	41.8
539	41.2
540	40.6
541	40.2
542	40.2
543	40.2
544	39.3
545	37.2
546	31.9
547	26.6
548	21.2
549	15.9
550	10.6
551	5.2
552	0
553	0
554	0
555	0
556	0
557	0
558	0
559	0
560	0
561	0
562	0
563	0
564	0
565	0
566	0
567	0
568	0
569	5.3
570	10.6
571	15.9
572	20.9
573	23.5
574	25.7
575	27.4
576	27.4
577	27.4
578	28.2
579	28.5
580	28.5
581	28.2
582	27.4
583	27.2
584	26.7
585	27.4
586	27.5
587	27.4
588	26.7
589	26.6
590	26.6
591	26.7
592	27.4
593	28.3

SPEED VERSUS TIME SEQUENCE—Continued

Time (seconds)	Speed (kilometers per hour)
594	29.8
595	30.9
596	32.5
597	33.8
598	34.0
599	34.1
600	34.8
601	35.4
602	36.0
603	36.2
604	36.2
605	36.2
606	36.5
607	38.1
608	40.4
609	41.8
610	42.6
611	43.5
612	42.0
613	36.7
614	31.4
615	26.1
616	20.8
617	15.4
618	10.1
619	4.8
620	0
621	0
622	0
623	0
624	0
625	0
626	0
627	0
628	0
629	0
630	0
631	0
632	0
633	0
634	0
635	0
636	0
637	0
638	0
639	0
640	0
641	0
642	0
643	0
644	0
645	0
646	3.2
647	7.2
648	12.6
649	16.4
650	20.1
651	22.5
652	24.6
653	28.2
654	31.5
655	33.8
656	35.7
657	37.5
658	39.4
659	40.7
660	41.2
661	41.8
662	42.0
663	42.2

SPEED VERSUS TIME SEQUENCE—Continued

Time (seconds)	Speed (kilometers per hour)
664	42.2
665	42.5
666	42.6
667	42.6
668	41.8
669	41.0
670	38.0
671	34.4
672	29.8
673	26.4
674	23.3
675	18.7
676	14.0
677	9.3
678	5.6
679	3.2
680	0
681	0
682	0
683	0
684	0
685	0
686	0
687	0
688	0
689	0
690	0
691	0
692	0
693	0
694	2.3
695	5.3
696	7.1
697	10.5
698	14.8
699	18.2
700	21.7
701	23.5
702	26.4
703	26.9
704	26.6
705	26.6
706	29.3
707	30.9
708	32.3
709	34.6
710	36.2
711	36.2
712	35.6
713	36.5
714	37.5
715	37.8
716	36.2
717	34.8
718	33.0
719	29.0
720	24.1
721	19.3
722	14.5
723	10.0
724	7.2
725	4.8
726	3.4
727	0.8
728	0.8
729	5.1
730	10.5
731	15.4
732	20.1
733	22.5

SPEED VERSUS TIME SEQUENCE—Continued

Time (seconds)	Speed (kilometers per hour)
734	25.7
735	29.0
736	31.5
737	34.6
738	37.2
739	39.4
740	41.0
741	42.6
742	43.6
743	44.4
744	44.9
745	45.5
746	46.0
747	46.0
748	45.5
749	45.4
750	45.1
751	44.3
752	43.1
753	41.0
754	37.8
755	34.6
756	30.6
757	26.6
758	24.0
759	20.1
760	15.1
761	10.0
762	4.8
763	2.4
764	2.4
765	0.8
766	0
767	4.8
768	10.1
769	15.4
770	20.8
771	25.4
772	28.2
773	29.6
774	31.4
775	33.3
776	35.4
777	37.3
778	40.2
779	42.6
780	44.3
781	45.1
782	45.5
783	46.5
784	46.5
785	46.5
786	46.3
787	45.9
788	45.5
789	45.5
790	45.5
791	45.4
792	44.4
793	44.3
794	44.3
795	44.3
796	44.3
797	44.3
798	44.3
799	44.4
800	45.1
801	45.9
802	48.3
803	49.9

SPEED VERSUS TIME SEQUENCE—Continued

Time (seconds)	Speed (kilometers per hour)
804	51.5
805	53.1
806	53.1
807	54.1
808	54.7
809	55.2
810	55.0
811	54.7
812	54.7
813	54.6
814	54.1
815	53.3
816	53.1
817	52.3
818	51.5
819	51.3
820	50.9
821	50.7
822	49.2
823	48.3
824	48.1
825	48.1
826	48.1
827	48.1
828	47.6
829	47.5
830	47.5
831	47.2
832	46.5
833	45.4
834	44.6
835	43.5
836	41.0
837	38.1
838	35.4
839	33.0
840	30.9
841	30.9
842	32.3
843	33.6
844	34.4
845	35.4
846	36.4
847	37.3
848	38.6
849	40.2
850	41.8
851	42.8
852	42.8
853	43.1
854	43.5
855	43.8
856	44.7
857	45.2
858	46.3
859	46.5
860	46.7
861	46.8
862	46.7
863	45.2
864	44.3
865	43.5
866	41.5
867	40.2
868	39.4
869	39.9
870	40.4
871	41.0
872	41.4
873	42.2

SPEED VERSUS TIME SEQUENCE—Continued

Time (seconds)	Speed (kilometers per hour)
874	43.3
875	44.3
876	44.7
877	45.7
878	46.7
879	47.0
880	46.8
881	46.7
882	46.5
883	45.9
884	45.2
885	45.1
886	45.1
887	44.4
888	43.8
889	42.8
890	43.5
891	44.3
892	44.7
893	45.1
894	44.7
895	45.1
896	45.1
897	45.1
898	44.6
899	44.1
900	43.3
901	42.8
902	42.6
903	42.6
904	42.6
905	42.3
906	42.2
907	42.2
908	41.7
909	41.2
910	41.2
911	41.7
912	41.5
913	41.0
914	39.6
915	37.8
916	35.7
917	34.8
918	34.8
919	34.9
920	36.4
921	37.7
922	38.6
923	38.9
924	39.3
925	40.1
926	40.4
927	40.6
928	40.7
929	41.0
930	40.6
931	40.2
932	40.2
933	40.2
934	39.8
935	39.4
936	39.1
937	39.1
938	39.4
939	40.2
940	40.2
941	39.6
942	39.6
943	38.8

SPEED VERSUS TIME SEQUENCE—Continued

Time (seconds)	Speed (kilometers per hour)
944	39.4
945	40.4
946	41.2
947	40.4
948	38.6
949	35.4
950	32.3
951	27.2
952	21.9
953	16.6
954	11.3
955	6.0
956	0.6
957	0
958	0
959	0
960	3.2
961	8.5
962	13.8
963	19.2
964	24.5
965	28.2
966	29.9
967	32.2
968	34.0
969	35.4
970	37.0
971	39.4
972	42.3
973	44.3
974	45.2
975	45.7
976	45.9
977	45.9
978	45.9
979	44.6
980	44.3
981	43.8
982	43.1
983	42.6
984	41.8
985	41.4
986	40.6
987	38.6
988	35.4
989	34.6
990	34.6
991	35.1
992	36.2
993	37.0
994	36.7
995	36.7
996	37.0
997	36.5
998	36.5
999	36.5
1,000	37.8
1,001	38.6
1,002	39.6
1,003	39.9
1,004	40.4
1,005	41.0
1,006	41.2
1,007	41.0
1,008	40.2
1,009	38.8
1,010	38.1
1,011	37.3
1,012	36.9
1,013	36.2

SPEED VERSUS TIME SEQUENCE—Continued

Time (seconds)	Speed (kilometers per hour)
1,014	35.4
1,015	34.8
1,016	33.0
1,017	28.2
1,018	22.9
1,019	17.5
1,020	12.2
1,021	6.9
1,022	1.6
1,023	0
1,024	0
1,025	0
1,026	0
1,027	0
1,028	0
1,029	0
1,030	0
1,031	0
1,032	0
1,033	0
1,034	0
1,035	0
1,036	0
1,037	0
1,038	0
1,039	0
1,040	0
1,041	0
1,042	0
1,043	0
1,044	0
1,045	0
1,046	0
1,047	0
1,048	0
1,049	0
1,050	0
1,051	0
1,052	0
1,053	1.9
1,054	6.4
1,055	11.7
1,056	17.1
1,057	22.4
1,058	27.4
1,059	29.8
1,060	32.2
1,061	35.1
1,062	37.0
1,063	38.6
1,064	39.9
1,065	41.2
1,066	42.6
1,067	43.1
1,068	44.1
1,069	44.9
1,070	45.5
1,071	45.1
1,072	44.3
1,073	43.5
1,074	43.5
1,075	42.3
1,076	39.4
1,077	36.2
1,078	34.6
1,079	33.2
1,080	29.0
1,081	24.1
1,082	19.8
1,083	17.9

SPEED VERSUS TIME SEQUENCE—Continued

Time (seconds)	Speed (kilometers per hour)
1,084	17.1
1,085	16.1
1,086	15.3
1,087	14.6
1,088	14.0
1,089	13.8
1,090	14.2
1,091	14.5
1,092	14.0
1,093	13.8
1,094	12.9
1,095	11.3
1,096	8.0
1,097	6.8
1,098	4.2
1,099	1.6
1,100	0.9
1,101	0.2
1,102	1.0
1,103	2.6
1,104	5.8
1,105	11.1
1,106	16.1
1,107	20.6
1,108	22.5
1,109	23.3
1,110	25.7
1,111	29.1
1,112	32.2
1,113	33.8
1,114	34.1
1,115	34.3
1,116	34.4
1,117	34.9
1,118	36.2
1,119	37.0
1,120	38.3
1,121	39.4
1,122	40.2
1,123	40.1
1,124	39.9
1,125	40.2
1,126	40.9
1,127	41.5
1,128	41.8
1,129	42.5
1,130	42.8
1,131	43.3
1,132	43.5
1,133	43.5
1,134	43.5
1,135	43.3
1,136	43.1
1,137	43.1
1,138	42.6
1,139	42.5
1,140	41.8
1,141	41.0
1,142	39.6
1,143	37.8
1,144	34.6
1,145	32.2
1,146	28.2
1,147	25.7
1,148	22.5
1,149	17.2
1,150	11.9
1,151	6.6
1,152	1.3
1,153	0

SPEED VERSUS TIME SEQUENCE—Continued

Time (seconds)	Speed (kilometers per hour)
1,154	0
1,155	0
1,156	0
1,157	0
1,158	0
1,159	0
1,160	0
1,161	0
1,162	0
1,163	0
1,164	0
1,165	0
1,166	0
1,167	0
1,168	0
1,169	3.4
1,170	8.7
1,171	14.0
1,172	19.3
1,173	24.6
1,174	29.9
1,175	34.0
1,176	37.0
1,177	37.8
1,178	37.0
1,179	36.2
1,180	32.2
1,181	26.9
1,182	21.6
1,183	16.3
1,184	10.9
1,185	5.6
1,186	0.3
1,187	0
1,188	0
1,189	0
1,190	0
1,191	0
1,192	0
1,193	0.0
1,194	0.0
1,195	0.0
1,196	0.0
1,197	0.3
1,198	2.4
1,199	5.6
1,200	10.5
1,201	15.8
1,202	19.3
1,203	20.8
1,204	20.9
1,205	20.3
1,206	20.6
1,207	21.1
1,208	21.1
1,209	22.5
1,210	24.9
1,211	27.4
1,212	29.9
1,213	31.7
1,214	33.8
1,215	34.6
1,216	35.1
1,217	35.1
1,218	34.6
1,219	34.1
1,220	34.6
1,221	35.1
1,222	35.4
1,223	35.2

SPEED VERSUS TIME SEQUENCE—Continued

Time (seconds)	Speed (kilometers per hour)
1,224	34.9
1,225	34.6
1,226	34.6
1,227	34.4
1,228	32.3
1,229	31.4
1,230	30.9
1,231	31.5
1,232	31.9
1,233	32.2
1,234	31.4
1,235	28.2
1,236	24.9
1,237	20.9
1,238	16.1
1,239	12.9
1,240	9.7
1,241	6.4
1,242	4.0
1,243	1.1
1,244	0
1,245	0
1,246	0
1,247	0
1,248	0
1,249	0
1,250	0
1,251	0
1,252	1.6
1,253	1.6
1,254	1.6
1,255	1.6
1,256	1.6
1,257	2.6
1,258	4.8
1,259	6.4
1,260	8.0
1,261	10.1
1,262	12.9
1,263	16.1
1,264	16.9
1,265	15.3
1,266	13.7
1,267	12.2
1,268	14.2
1,269	17.7
1,270	22.5
1,271	27.4
1,272	31.4
1,273	33.8
1,274	35.1
1,275	35.7
1,276	37.0
1,277	38.0
1,278	38.8
1,279	39.4
1,280	39.4
1,281	38.6
1,282	37.8
1,283	37.8
1,284	37.8
1,285	37.8
1,286	37.8
1,287	37.8
1,288	38.6
1,289	38.8
1,290	39.4
1,291	39.8
1,292	40.2
1,293	40.9

SPEED VERSUS TIME SEQUENCE—Continued

Time (seconds)	Speed (kilometers per hour)
1,294	41.2
1,295	41.4
1,296	41.8
1,297	42.2
1,298	43.5
1,299	44.7
1,300	45.5
1,301	46.7
1,302	46.8
1,303	46.7
1,304	45.1
1,305	39.8
1,306	34.4
1,307	29.1
1,308	23.8
1,309	18.5
1,310	13.2
1,311	7.9
1,312	2.6
1,313	0
1,314	0
1,315	0
1,316	0
1,317	0
1,318	0
1,319	0
1,320	0
1,321	0
1,322	0
1,323	0
1,324	0
1,325	0
1,326	0
1,327	0
1,328	0
1,329	0
1,330	0
1,331	0
1,332	0
1,333	0
1,334	0
1,335	0
1,336	0
1,337	0
1,338	2.4
1,339	7.7
1,340	13.0
1,341	16.3
1,342	21.2
1,343	24.3
1,344	27.0
1,345	29.5
1,346	31.4
1,347	32.7
1,348	34.3
1,349	35.2
1,350	35.6
1,351	36.0
1,352	35.4
1,353	34.8
1,354	34.0
1,355	33.0
1,356	32.2
1,357	31.8
1,358	29.8
1,359	28.2
1,360	26.6
1,361	24.9
1,362	22.5
1,363	17.7

SPEED VERSUS TIME SEQUENCE—Continued

Time (seconds)	Speed (kilometers per hour)
1,364	12.9
1,365	8.4
1,366	4.0
1,367	0
1,368	0
1,369	0
1,370	0
1,371	0

(d) EPA Urban Dynamometer Driving Schedule for Heavy-Duty Vehicles.

SPEED VERSUS TIME SEQUENCE

Record (sec)	Speed (mph)
0	0.0
1	0.0
2	0.0
3	0.0
4	0.0
5	0.0
6	0.0
7	0.0
8	0.0
9	0.0
10	0.0
11	0.0
12	0.0
13	0.0
14	0.0
15	0.0
16	0.0
17	0.0
18	0.0
19	0.0
20	0.0
21	0.0
22	0.0
23	0.0
24	0.0
25	0.19
26	1.00
27	1.51
28	2.66
29	4.64
30	6.96
31	8.86
32	7.71
33	7.45
34	9.22
35	10.00
36	9.08
37	10.08
38	11.24
39	12.79
40	14.00
41	12.58
42	12.87
43	13.00
44	13.00
45	13.68
46	15.00
47	15.00
48	13.37
49	12.08
50	12.26
51	14.29
52	14.56

SPEED VERSUS TIME SEQUENCE—Continued

Record (sec)	Speed (mph)
53	15.20
54	16.76
55	17.00
56	17.00
57	17.23
58	18.77
59	20.54
60	19.60
61	18.14
62	17.98
63	17.00
64	16.34
65	15.00
66	15.00
67	15.00
68	15.96
69	12.35
70	15.28
71	14.27
72	12.59
73	12.25
74	9.28
75	8.00
76	8.00
77	8.38
78	9.53
79	10.69
80	11.00
81	9.00
82	9.00
83	9.32
84	10.00
85	9.36
86	9.00
87	9.95
88	14.33
89	17.53
90	19.42
91	20.00
92	20.74
93	21.00
94	21.11
95	23.84
96	27.00
97	27.00
98	29.05
99	32.52
100	31.01
101	31.00
102	31.62
103	33.00
104	32.37
105	30.43
106	30.00
107	30.00
108	30.51
109	32.41
110	33.00
111	32.27
112	32.00
113	31.04
114	32.20
115	33.36
116	34.00
117	34.00
118	34.00
119	33.01
120	31.86
121	30.10
122	26.17
123	23.39

SPEED VERSUS TIME SEQUENCE—Continued

Record (sec)	Speed (mph)
124	21.46
125	17.28
126	15.83
127	13.76
128	12.60
129	10.33
130	8.28
131	5.38
132	2.91
133	0.0
134	0.0
135	0.0
136	0.0
137	0.0
138	0.0
139	0.0
140	0.0
141	0.0
142	0.0
143	0.0
144	0.0
145	0.0
146	0.0
147	0.0
148	0.0
149	0.0
150	0.0
151	0.0
152	0.0
153	0.0
154	0.0
155	0.0
156	0.0
157	0.0
158	0.0
159	0.0
160	0.0
161	0.0
162	0.0
163	0.0
164	0.0
165	0.0
166	0.0
167	0.0
168	0.0
169	0.0
170	0.0
171	0.0
172	0.0
173	0.0
174	0.51
175	0.33
176	0.0
177	0.0
178	0.0
179	0.0
180	0.0
181	0.0
182	0.0
183	0.0
184	0.0
185	0.0
186	0.0
187	0.0
188	0.0
189	0.0
190	0.0
191	0.0
192	0.0
193	0.0
194	0.0

SPEED VERSUS TIME SEQUENCE—Continued

Record (sec)	Speed (mph)
195	0.0
196	0.0
197	0.13
198	0.71
199	0.0
200	0.0
201	0.0
202	0.0
203	4.15
204	6.00
205	6.00
206	6.00
207	5.30
208	4.14
209	1.96
210	0.0
211	0.0
212	0.0
213	0.0
214	0.0
215	0.0
216	0.0
217	0.0
218	0.0
219	0.0
220	0.0
221	0.0
222	0.0
223	0.0
224	0.0
225	0.0
226	0.0
227	0.0
228	0.0
229	0.0
230	0.0
231	0.48
232	1.64
233	0.41
234	0.0
235	0.0
236	0.0
237	0.0
238	0.0
239	0.0
240	0.0
241	0.0
242	0.0
243	0.0
244	0.0
245	0.0
246	0.0
247	0.0
248	0.0
249	0.0
250	0.0
251	0.0
252	0.0
253	0.0
254	0.0
255	0.0
256	0.0
257	0.0
258	0.0
259	0.0
260	0.0
261	0.0
262	0.0
263	0.0
264	0.0
265	0.0

SPEED VERSUS TIME SEQUENCE—Continued

Record (sec)	Speed (mph)
266	0.0
267	0.0
268	0.0
269	0.0
270	0.0
271	0.0
272	0.0
273	0.0
274	0.0
275	0.0
276	0.0
277	0.0
278	0.0
279	0.0
280	0.0
281	0.0
282	0.0
283	0.0
284	0.0
285	0.0
286	0.0
287	0.0
288	0.0
289	0.0
290	0.0
291	0.0
292	0.0
293	0.0
294	0.0
295	0.0
296	0.0
297	0.0
298	0.0
299	0.0
300	0.24
301	0.60
302	0.0
303	1.42
304	2.00
305	3.08
306	5.63
307	4.00
308	4.00
309	3.34
310	1.37
311	1.00
312	0.0
313	0.0
314	0.0
315	0.0
316	0.0
317	0.0
318	0.0
319	0.23
320	1.39
321	2.00
322	4.11
323	5.00
324	6.02
325	7.18
326	7.33
327	6.49
328	7.00
329	7.00
330	7.00
331	7.00
332	7.00
333	7.43
334	8.00
335	8.00
336	7.09

SPEED VERSUS TIME SEQUENCE—Continued

Record (sec)	Speed (mph)
337	11.06
338	12.89
339	14.49
340	11.46
341	13.08
342	16.55
343	16.00
344	15.34
345	12.32
346	13.00
347	13.00
348	13.00
349	15.86
350	12.00
351	11.73
352	11.00
353	11.00
354	11.00
355	11.90
356	12.89
357	10.36
358	7.26
359	4.95
360	4.68
361	6.68
362	8.00
363	7.84
364	7.00
365	6.53
366	7.89
367	10.57
368	11.00
369	10.10
370	10.74
371	10.42
372	11.00
373	12.46
374	14.77
375	14.09
376	16.20
377	17.00
378	17.00
379	17.00
380	17.00
381	15.02
382	15.71
383	14.00
384	14.92
385	15.38
386	15.78
387	16.00
388	16.00
389	16.25
390	17.41
391	18.56
392	19.00
393	19.88
394	21.00
395	21.00
396	21.00
397	20.49
398	20.00
399	19.18
400	19.00
401	18.86
402	18.29
403	19.00
404	19.61
405	20.00
406	20.00
407	20.00

SPEED VERSUS TIME SEQUENCE—Continued

Record (sec)	Speed (mph)
408	20.00
409	20.00
410	19.45
411	20.42
412	21.87
413	20.97
414	20.37
415	22.00
416	22.00
417	22.66
418	23.00
419	23.97
420	25.51
421	29.00
422	29.00
423	29.00
424	30.51
425	31.00
426	30.00
427	30.00
428	30.00
429	30.54
430	31.00
431	31.86
432	31.00
433	31.17
434	32.33
435	33.00
436	33.00
437	33.80
438	34.00
439	35.12
440	36.00
441	36.00
442	34.82
443	33.25
444	32.09
445	32.00
446	32.00
447	32.00
448	32.00
449	32.00
450	32.85
451	33.01
452	34.00
453	33.68
454	32.52
455	32.00
456	32.00
457	32.95
458	33.00
459	33.00
460	33.42
461	34.00
462	34.74
463	35.00
464	35.00
465	35.00
466	35.00
467	35.00
468	35.00
469	35.84
470	37.99
471	38.00
472	37.69
473	38.41
474	39.37
475	39.00
476	39.00
477	38.10
478	39.00

SPEED VERSUS TIME SEQUENCE—Continued

Record (sec)	Speed (mph)
479	39.41
480	40.57
481	41.73
482	42.00
483	41.92
484	40.00
485	40.00
486	39.49
487	37.66
488	37.00
489	36.01
490	34.86
491	33.70
492	32.54
493	29.54
494	26.46
495	22.28
496	19.91
497	18.76
498	17.60
499	16.44
500	14.57
501	13.13
502	11.97
503	10.81
504	9.31
505	7.50
506	6.34
507	4.37
508	3.03
509	1.87
510	0.71
511	0.0
512	0.0
513	0.0
514	0.0
515	0.0
516	0.0
517	0.0
518	0.0
519	0.0
520	0.0
521	0.0
522	0.0
523	0.0
524	0.0
525	0.0
526	0.0
527	0.0
528	0.0
529	0.0
530	0.0
531	0.0
532	0.0
533	0.0
534	0.0
535	0.0
536	0.0
537	0.0
538	0.0
539	0.0
540	0.0
541	0.0
542	0.0
543	0.0
544	2.36
545	3.94
546	5.31
547	8.26
548	9.42
549	11.15

SPEED VERSUS TIME SEQUENCE—Continued

Record (sec)	Speed (mph)
550	12.73
551	14.78
552	16.05
553	17.41
554	19.72
555	21.52
556	23.35
557	24.83
558	25.99
559	27.15
560	28.31
561	29.46
562	30.62
563	31.78
564	32.94
565	34.18
566	36.25
567	37.41
568	38.56
569	39.72
570	40.00
571	40.00
572	40.00
573	40.00
574	40.00
575	40.00
576	40.82
577	41.00
578	41.00
579	41.30
580	42.00
581	42.00
582	42.00
583	42.93
584	43.00
585	43.00
586	43.00
587	43.56
588	44.71
589	45.00
590	44.97
591	44.18
592	44.66
593	44.00
594	44.00
595	44.81
596	45.00
597	45.00
598	45.00
599	45.44
600	46.00
601	46.00
602	46.92
603	47.00
604	47.00
605	47.00
606	47.00
607	47.00
608	47.00
609	47.04
610	49.00
611	49.33
612	49.51
613	49.00
614	49.00
615	49.00
616	49.00
617	48.72
618	48.87
619	50.00
620	50.00

SPEED VERSUS TIME SEQUENCE—Continued

Record (sec)	Speed (mph)
621	50.00
622	50.00
623	49.78
624	49.00
625	49.00
626	49.69
627	50.00
628	50.00
629	50.00
630	49.68
631	49.00
632	49.00
633	48.20
634	48.00
635	48.00
636	48.27
637	49.00
638	49.58
639	50.00
640	50.00
641	50.00
642	50.00
643	50.00
644	50.00
645	50.00
646	50.00
647	50.00
648	50.00
649	50.00
650	50.47
651	51.00
652	51.00
653	51.00
654	51.00
655	51.00
656	51.42
657	52.00
658	52.00
659	52.00
660	52.00
661	52.20
662	53.00
663	53.00
664	53.00
665	53.00
666	53.00
667	53.00
668	53.00
669	53.00
670	52.38
671	52.00
672	52.93
673	52.91
674	52.25
675	53.00
676	53.00
677	53.00
678	53.00
679	53.00
680	53.00
681	53.00
682	53.00
683	53.00
684	53.00
685	53.98
686	55.00
687	55.00
688	55.00
689	55.00
690	55.00
691	55.00

SPEED VERSUS TIME SEQUENCE—Continued

Record (sec)	Speed (mph)
692	55.00
693	55.00
694	55.00
695	55.00
696	55.00
697	55.00
698	55.00
699	55.00
700	55.00
701	54.50
702	54.66
703	55.00
704	54.03
705	54.00
706	54.00
707	54.00
708	54.00
709	54.00
710	54.00
711	54.00
712	54.00
713	54.77
714	56.00
715	56.00
716	56.00
717	56.02
718	57.00
719	56.67
720	56.00
721	56.00
722	56.00
723	56.00
724	56.00
725	56.00
726	56.00
727	56.00
728	56.00
729	56.91
730	57.00
731	57.00
732	57.00
733	57.00
734	57.00
735	57.85
736	58.00
737	58.00
738	58.00
739	58.00
740	58.00
741	58.00
742	58.00
743	58.00
744	58.00
745	57.15
746	56.00
747	56.00
748	56.00
749	56.00
750	56.00
751	55.63
752	55.00
753	55.00
754	55.00
755	55.00
756	55.00
757	55.00
758	55.00
759	55.00
760	54.22
761	54.00
762	54.00

SPEED VERSUS TIME SEQUENCE—Continued

Record (sec)	Speed (mph)
763	54.00
764	54.00
765	54.00
766	54.00
767	54.00
768	54.00
769	54.00
770	54.00
771	54.00
772	54.00
773	54.00
774	53.01
775	50.86
776	49.70
777	48.54
778	47.39
779	46.23
780	45.07
781	43.91
782	42.51
783	40.60
784	39.44
785	38.28
786	37.13
787	35.94
788	33.81
789	32.66
790	30.50
791	28.34
792	26.37
793	25.03
794	21.87
795	19.85
796	16.56
797	15.40
798	14.24
799	12.17
800	10.71
801	6.08
802	2.61
803	1.45
804	0.30
805	0.0
806	0.0
807	0.0
808	0.0
809	0.0
810	0.0
811	0.0
812	0.0
813	0.0
814	0.0
815	0.0
816	0.0
817	0.0
818	0.0
819	0.0
820	0.0
821	0.0
822	0.0
823	0.0
824	0.0
825	0.0
826	0.0
827	0.0
828	0.0
829	0.0
830	0.0
831	0.19
832	1.00
833	1.51

SPEED VERSUS TIME SEQUENCE—Continued

Record (sec)	Speed (mph)
834	2.66
835	4.64
836	6.96
837	8.86
838	7.71
839	7.45
840	9.22
841	10.00
842	9.08
843	10.08
844	11.24
845	12.79
846	14.00
847	12.58
848	12.87
849	13.00
850	13.00
851	13.68
852	15.00
853	15.00
854	13.37
855	12.03
856	12.26
857	14.29
858	14.56
859	15.20
860	16.76
861	17.00
862	17.00
863	17.23
864	18.77
865	20.54
866	19.60
867	18.14
868	17.98
869	17.00
870	16.34
871	15.00
872	15.00
873	15.00
874	15.96
875	12.35
876	15.28
877	14.27
878	12.59
879	12.25
880	9.28
881	8.00
882	8.00
883	8.38
884	9.53
885	10.69
886	11.00
887	9.00
888	9.00
889	9.32
890	10.00
891	9.36
892	9.00
893	9.95
894	14.33
895	17.53
896	19.42
897	20.00
898	20.74
899	21.00
900	21.11
901	23.84
902	27.00
903	27.00
904	29.05

SPEED VERSUS TIME SEQUENCE—Continued

Record (sec)	Speed (mph)
905	32.52
906	31.01
907	31.00
908	31.62
909	33.00
910	32.37
911	30.43
912	30.00
913	30.00
914	30.51
915	32.41
916	33.00
917	32.27
918	32.00
919	31.04
920	32.20
921	33.36
922	34.00
923	34.00
924	34.00
925	33.01
926	31.86
927	30.10
928	26.17
929	23.39
930	21.46
931	17.28
932	15.83
933	13.76
934	12.60
935	10.33
936	8.28
937	5.38
938	2.91
939	0.0
940	0.0
941	0.0
942	0.0
943	0.0
944	0.0
945	0.0
946	0.0
947	0.0
948	0.0
949	0.0
950	0.0
951	0.0
952	0.0
953	0.0
954	0.0
955	0.0
956	0.0
957	0.0
958	0.0
959	0.0
960	0.0
961	0.0
962	0.0
963	0.0
964	0.0
965	0.0
966	0.0
967	0.0
968	0.0
969	0.0
970	0.0
971	0.0
972	0.0
973	0.0
974	0.0
975	0.0

SPEED VERSUS TIME SEQUENCE—Continued

Record (sec)	Speed (mph)
976	0.0
977	0.0
978	0.0
979	0.0
980	0.51
981	0.33
982	0.0
983	0.0
984	0.0
985	0.0
986	0.0
987	0.0
988	0.0
989	0.0
990	0.0
991	0.0
992	0.0
993	0.0
994	0.0
995	0.0
996	0.0
997	0.0
998	0.0
999	0.0
1000	0.0
1001	0.0
1002	0.0
1003	0.13
1004	0.71
1005	0.0
1006	0.0
1007	0.0
1008	0.0
1009	4.15
1010	6.00
1011	6.00
1012	6.00
1013	5.30
1014	4.14
1015	1.96
1016	0.0
1017	0.0
1018	0.0
1019	0.0
1020	0.0
1021	0.0
1022	0.0
1023	0.0
1024	0.0
1025	0.0
1026	0.0
1027	0.0
1028	0.0
1029	0.0
1030	0.0
1031	0.0
1032	0.0
1033	0.0
1034	0.0
1035	0.0
1036	0.0
1037	0.48
1038	1.64
1039	0.41
1040	0.0
1041	0.0
1042	0.0
1043	0.0
1044	0.0
1045	0.0
1046	0.0

SPEED VERSUS TIME SEQUENCE—Continued

Record (sec)	Speed (mph)
1047	0.0
1048	0.0
1049	0.0
1050	0.0
1051	0.0
1052	0.0
1053	0.0
1054	0.0
1055	0.0

SPEED VERSUS TIME SEQUENCE—Continued

Record (sec)	Speed (mph)
1056	0.0
1057	0.0
1058	0.0
1059	0.0
1060	0.0

(e) EPA New York City Cycle for Light-Duty Vehicles and Light-Duty Trucks.

EPA NEW YORK CITY CYCLE

[Speed versus time sequence]

Time (sec)	Speed (mph)	Time (sec)	Speed (mph)	Time (sec)	Speed (mph)
0	0	1	0	2	0
3	0	4	0	5	0
6	0	7	0	8	0
9	0	10	0	11	0
12	0	13	0	14	0
15	0	16	0	17	0
18	0	19	0	20	0
21	0	22	0	23	0
24	0	25	0	26	0
27	0	28	0	29	0
30	0	31	0	32	0
33	0	34	0	35	0
36	0	37	0	38	0
39	0	40	0	41	0
42	0	43	0	44	0
45	0	46	0	47	0.4
48	2.8	49	5.6	50	7.0
51	7.6	52	7.6	53	6.2
54	6.4	55	7.6	56	9.5
57	8.9	58	8.6	59	9.6
60	12.4	61	15.0	62	17.8
63	21.0	64	22.9	65	21.7
66	18.2	67	14.5	68	10.2
69	5.6	70	2.5	71	2.1
72	3.1	73	5.7	74	9.0
75	10.8	76	10.8	77	9.5
78	6.5	79	3.9	80	2.6
81	1.0	82	0.8	83	0.1
84	0	85	0	86	0
87	0	88	0	89	0
90	0	91	0	92	0
93	0	94	0	95	0
96	2.7	97	8.3	98	12.4
99	15.7	100	17.4	101	17.3
102	17.2	103	15.1	104	11.2
105	8.6	106	5.9	107	5.4
108	6.8	109	6.9	110	4.8
111	5.7	112	7.1	113	6.8
114	5.9	115	6.0	116	6.0
117	5.9	118	5.6	119	5.5
120	7.2	121	9.9	122	10.8
123	11.4	124	11.9	125	12.1
126	12.6	127	12.3	128	10.6
129	9.9	130	9.4	131	8.9
132	7.6	133	6.1	134	5.0
135	3.7	136	2.6	137	1.0
138	0.8	139	0.1	140	0.4
141	0.2	142	0	143	0
144	0	145	1.3	146	6.0

EPA NEW YORK CITY CYCLE—Continued

[Speed versus time sequence]

Time (sec)	Speed (mph)	Time (sec)	Speed (mph)	Time (sec)	Speed (mph)
147	10.2	148	12.1	149	13.8
150	15.1	151	16.2	152	15.9
153	16.0	154	16.8	155	17.5
156	18.0	157	19.6	158	21.7
159	23.1	160	23.7	161	24.1
162	24.5	163	25.0	164	25.2
165	24.6	166	24.3	167	23.3
168	22.7	169	22.1	170	21.6
171	21.1	172	20.3	173	19.2
174	17.0	175	13.9	176	14.1
177	14.6	178	14.6	179	14.5
180	14.4	181	14.2	182	14.2
183	13.2	184	11.5	185	8.4
186	5.5	187	3.7	188	2.9
189	1.3	190	0.8	191	0.3
192	0.1	193	0.1	194	0
195	1.3	196	3.9	197	9.9
198	15.9	199	19.3	200	20.7
201	21.4	202	21.4	203	20.5
204	19.0	205	16.7	206	13.1
207	11.2	208	14.9	209	19.8
210	23.8	211	25.7	212	26.2
213	26.4	214	23.3	215	19.6
216	18.9	217	19.3	218	19.4
219	18.5	220	17.5	221	16.4
222	15.6	223	15.6	224	16.0
225	16.8	226	17.5	227	18.0
228	19.6	229	21.7	230	23.5
231	24.6	232	25.0	233	24.3
234	23.1	235	20.7	236	17.2
237	13.5	238	9.2	239	3.3
240	0	241	0	242	0
243	0	244	0	245	0
246	0	247	0	248	0
249	0	250	0	251	0
252	0	253	0	254	0.2
255	2.0	256	4.5	257	6.4
258	7.2	259	7.6	260	7.2
261	6.6	262	6.5	263	5.1
264	4.4	265	5.5	266	3.0
267	3.4	268	3.0	269	2.9
270	1.3	271	0.8	272	0.3
273	0	274	0	275	0.3
276	4.7	277	9.7	278	13.9
279	16.7	280	19.1	281	20.5
282	20.5	283	19.7	284	19.9
285	20.4	286	20.9	287	21.4
288	21.9	289	22.4	290	22.1
291	21.4	292	20.8	293	20.3
294	20.5	295	19.3	296	17.3
297	17.1	298	16.7	299	14.3
300	11.9	301	10.7	302	10.2
303	9.4	304	10.6	305	12.8
306	13.7	307	12.3	308	10.4
309	8.6	310	5.5	311	3.2
312	2.0	313	0.6	314	0
315	0	316	0	317	0
318	0	319	0	320	0
321	0	322	0	323	2.5
324	6.1	325	5.5	326	3.2
327	3.6	328	6.1	329	9.1

EPA NEW YORK CITY CYCLE—Continued

[Speed versus time sequence]

Time (sec)	Speed (mph)	Time (sec)	Speed (mph)	Time (sec)	Speed (mph)
330	9.8	331	8.6	332	6.8
333	5.9	334	5.6	335	6.0
336	7.2	337	8.4	338	9.3
339	7.6	340	5.5	341	2.5
342	0.1	343	0	344	0
345	0	346	0	347	0
348	0	349	0	350	0
351	0	352	0	353	0
354	0	355	0	356	0
357	0	358	0	359	0
360	0	361	0	362	0
363	0	364	0	365	0
366	0	367	0	368	0
369	0	370	0	371	0
372	0	373	0	374	0
375	0	376	0	377	0
378	0	379	0	380	0
381	0	382	0	383	0
384	0	385	0	386	0
387	0	388	0	389	0
390	0	391	0	392	0
393	0	394	0	395	0.2
396	1.6	397	3.0	398	3.0
399	2.1	400	2.3	401	4.6
402	7.8	403	9.9	404	10.7
405	10.2	406	10.1	407	10.7
408	10.9	409	11.4	410	11.1
411	10.0	412	8.8	413	8.2
414	8.6	415	10.2	416	11.8
417	13.0	418	13.3	419	12.8
420	11.7	421	11.7	422	12.4
423	13.7	424	14.4	425	14.3
426	14.7	427	15.1	428	15.3
429	15.8	430	14.5	431	12.2
432	11.1	433	12.0	434	13.1
435	12.2	436	8.9	437	7.7
438	7.6	439	8.0	440	5.5
441	3.3	442	2.4	443	1.4
444	0.6	445	0	446	0
447	0	448	0	449	0
450	0	451	0	452	0
453	0	454	0	455	0
456	0	457	0	458	0
459	0	460	0	461	0
462	0	463	0	464	0
465	0	466	0	467	0
468	0	469	0	470	0
471	0	472	0	473	0
474	0	475	0	476	0
477	0	478	0	479	0
480	0	481	0	482	0
483	0	484	0	485	0
486	0	487	0	488	0
489	0	490	0	491	0
492	0	493	0	494	0
495	1.0	496	4.1	497	7.4
498	10.2	499	11.3	500	11.8
501	12.2	502	14.3	503	16.0
504	17.8	505	18.6	506	19.6
507	20.2	508	19.9	509	19.7
510	20.8	511	21.0	512	18.8

EPA NEW YORK CITY CYCLE—Continued

[Speed versus time sequence]

Time (sec)	Speed (mph)	Time (sec)	Speed (mph)	Time (sec)	Speed (mph)
513	17.6	514	13.0	515	7.5
516	2.9	517	0.8	518	0
519	0.2	520	0.7	521	1.4
522	2.3	523	2.7	524	3.0
525	2.6	526	1.2	527	0.1
528	0.7	529	1.8	530	3.1
531	3.9	532	5.3	533	7.8
534	9.7	535	10.3	536	10.2
537	9.4	538	7.1	539	6.8
540	8.9	541	10.6	542	11.9
543	15.5	544	19.6	545	22.8
546	25.1	547	26.0	548	26.7
549	27.3	550	27.7	551	27.6
552	27.3	553	25.7	554	23.3
555	20.6	556	17.8	557	14.9
558	11.3	559	7.4	560	4.6
561	1.7	562	0.7	563	0
564	0	565	0	566	0
567	0	568	0	569	0
570	0	571	0	572	0
573	0	574	0	575	0
576	0	577	0	578	0
579	0	580	0	581	0
582	0	583	0	584	0
585	0	586	0	587	0
588	0	589	0	590	0
591	0	592	0	593	0
594	0	595	0	596	0
597	0	598	0	599	0
600	0				

(f)(1) EPA Engine Dynamometer Schedules for Heavy-duty Otto-cycle engines.

Record (seconds)	Percent	
	Normalized revolutions per minute	Normalized torque
1	0.0	0.0
2	0.0	0.0
3	0.0	0.0
4	0.0	0.0
5	0.0	0.0
6	0.0	0.0
7	0.0	0.0
8	0.0	0.0
9	0.0	0.0
10	0.0	0.0
11	0.0	0.0
12	0.0	0.0
13	0.0	0.0
14	0.0	0.0
15	0.0	0.0
16	0.0	0.0
17	0.0	0.0
18	0.0	0.0
19	0.0	0.0
20	0.0	0.0
21	0.0	0.0
22	0.0	0.0
23	0.0	0.0
24	0.0	0.0
25	7.00	44.40
26	16.00	85.40
27	27.00	97.80
28	38.00	100.00
29	45.00	100.00
30	51.00	100.00
31	54.00	97.50
32	53.00	90.00
33	49.00	75.20
34	45.00	50.00
35	40.00	10.00
36	34.00	2.30
37	27.00	0.0
38	21.00	2.30
39	16.00	12.00
40	12.00	35.30
41	8.50	4.90
42	5.00	−10.00
43	3.00	−10.00
44	0.0	0.0
45	0.0	0.0
46	0.0	0.0
47	0.0	0.0
48	0.0	0.0
49	0.0	0.0
50	0.0	0.0
51	3.00	10.00

Record (seconds)	Percent	
	Normalized revolutions per minute	Normalized torque
52	11.00	40.20
53	20.00	53.00
54	27.50	64.80
55	32.00	78.00
56	32.00	78.00
57	27.50	56.00
58	26.00	24.40
59	24.00	−8.40
60	23.00	−10.00
61	24.00	−10.00
62	27.00	−10.00
63	34.00	−10.00
64	44.00	28.00
65	57.00	74.40
66	60.00	74.40
67	53.00	33.60
68	48.00	−10.00
69	44.00	−10.00
70	40.00	−10.00
71	40.00	7.00
72	44.00	22.70
73	46.00	30.00
74	46.00	32.00
75	44.00	25.00
76	40.00	18.00
77	37.00	14.00
78	36.00	10.00
79	34.00	0.0
80	34.00	−10.00
81	32.00	−10.00
82	31.00	−10.00
83	36.00	39.90
84	42.00	84.70
85	48.00	90.00
86	50.00	90.00
87	50.00	90.00
88	47.00	85.00
89	43.00	75.00
90	38.00	60.00
91	36.00	36.00
92	36.00	7.50
93	36.30	−10.00
94	45.00	64.50
95	53.00	67.00
96	58.00	64.50
97	62.00	60.30
98	63.00	55.50
99	62.00	52.30
100	61.00	47.00
101	55.00	44.00
102	50.00	39.00
103	45.00	36.00
104	40.00	34.00
105	36.00	30.00
106	34.00	25.80
107	32.00	20.00
108	30.00	14.60
109	26.00	10.00
110	23.00	0.0
111	18.00	−8.00
112	16.00	−10.00
113	18.00	−8.00
114	20.00	27.60
115	17.00	4.00
116	14.00	−8.00
117	12.00	−10.00
118	9.00	−10.00
119	7.00	−10.00
120	7.00	−10.00
121	5.00	−10.00
122	4.00	−10.00
123	3.00	−10.00
124	2.00	−8.00
125	0.0	0.0
126	0.0	0.0
127	0.0	0.0
128	0.0	0.0
129	0.0	0.0
130	5.00	8.00
131	8.00	16.30
132	10.00	27.50
133	8.00	27.50
134	5.00	9.00
135	2.00	1.80
136	0.0	0.0
137	0.0	0.0
138	0.0	0.0
139	0.0	0.0
140	0.0	0.0
141	0.0	0.0
142	0.0	0.0
143	0.0	0.0
144	0.0	0.0
145	0.0	0.0
146	0.0	0.0
147	0.0	0.0
148	0.0	0.0
149	2.00	4.80
150	1.00	4.50
151	0.0	0.0
152	0.0	0.0
153	0.0	0.0
154	0.0	0.0
155	0.0	0.0
156	0.0	0.0
157	0.0	0.0
158	0.0	0.0
159	0.0	0.0
160	0.0	0.0
161	0.0	0.0
162	0.0	0.0
163	0.0	0.0
164	0.0	0.0
165	0.0	0.0
166	0.0	0.0
167	8.00	27.00
168	18.00	65.00
169	23.00	82.50
170	23.00	88.00
171	21.00	88.00
172	18.00	81.30
173	17.00	32.00
174	15.00	−10.00
175	13.00	−10.00
176	11.00	−10.00
177	8.00	−10.00
178	6.00	−10.00
179	4.00	−10.00
180	2.00	−10.00
181	0.0	0.0
182	0.0	0.0
183	0.0	0.0
184	0.0	0.0
185	0.0	0.0
186	0.0	0.0
187	0.0	0.0
188	0.0	0.0
189	0.0	0.0
190	0.0	0.0
191	0.0	0.0
192	0.0	0.0
193	0.0	0.0

Record (seconds)	Percent	
	Normalized revolutions per minute	Normalized torque
194	0.0	0.0
195	0.0	0.0
196	0.0	0.0
197	0.0	0.0
198	0.0	0.0
199	0.0	0.0
200	0.0	0.0
201	0.0	0.0
202	0.0	0.0
203	0.0	0.0
204	0.0	4.00
205	0.50	7.70
206	5.00	14.00
207	11.00	24.70
208	15.00	42.30
209	16.00	70.00
210	17.00	70.00
211	17.00	50.00
212	16.00	26.30
213	14.00	5.00
214	10.00	−10.00
215	10.00	−10.00
216	14.00	73.30
217	18.00	83.00
218	19.00	84.80
219	18.00	84.80
220	16.00	82.80
221	11.00	74.00
222	7.00	8.50
223	4.00	0.0
224	0.0	0.0
225	0.0	0.0
226	0.0	0.0
227	0.0	0.0
228	0.0	0.0
229	0.0	0.0
230	0.0	0.0
231	0.0	0.0
232	0.0	0.0
233	6.00	17.60
234	6.00	19.60
235	5.00	14.00
236	3.00	9.80
237	1.00	5.50
238	0.0	3.00
239	0.0	0.0
240	0.0	0.0
241	0.0	0.0
242	0.0	0.0
243	0.0	0.0
244	0.0	0.0
245	0.0	0.0
246	0.0	0.0
247	0.0	0.0
248	0.0	0.0
249	0.0	0.0
250	0.0	0.0
251	0.0	0.0
252	0.0	0.0
253	0.0	0.0
254	0.0	0.0
255	0.0	0.0
256	0.0	0.0
257	0.0	0.0
258	0.0	0.0
259	0.0	0.0
260	0.0	0.0
261	0.0	0.0
262	0.0	0.0
263	0.0	0.0
264	0.0	0.0
265	0.0	0.0
266	0.0	0.0
267	0.0	0.0
268	0.0	0.0
269	0.0	0.0
270	0.0	0.0
271	0.0	0.0
272	0.0	0.0
273	0.0	0.0
274	0.0	0.0
275	0.0	0.0
276	0.0	0.0
277	0.0	0.0
278	0.0	0.0
279	0.0	0.0
280	0.0	0.0
281	0.0	7.00
282	1.00	10.00
283	2.00	11.50
284	1.00	10.00
285	0.0	0.0
286	0.0	0.0
287	0.0	0.0
288	0.0	0.0
289	0.0	0.0
290	0.0	0.0
291	0.0	0.0
292	0.0	0.0
293	0.0	0.0
294	0.0	0.0
295	0.0	0.0
296	0.0	0.0
297	0.0	0.0
298	0.0	0.0
299	0.0	28.00
300	0.0	30.00
301	2.00	32.00
302	6.00	34.00
303	14.00	36.00
304	19.00	36.00
305	24.50	36.00
306	24.50	36.00
307	24.00	30.00
308	19.00	24.00
309	13.00	18.00
310	9.00	14.00
311	7.00	8.00
312	6.00	0.0
313	4.00	3.00
314	3.00	6.80
315	0.0	0.0
316	0.0	0.0
317	0.0	0.0
318	0.0	0.0
319	0.0	0.0
320	0.0	0.0
321	0.0	0.0
322	0.0	0.0
323	0.0	18.00
324	3.00	40.00
325	8.00	86.00
326	18.00	97.00
327	38.00	100.00
328	45.50	100.00
329	45.00	96.00
330	44.00	84.40
331	43.00	53.60
332	41.00	5.00
333	43.00	47.60
334	44.00	90.00
335	45.00	90.00

Record (seconds)	Percent	
	Normalized revolutions per minute	Normalized torque
336	44.00	73.00
337	40.00	54.00
338	38.00	34.70
339	36.00	10.00
340	35.00	10.00
341	35.00	10.00
342	35.50	60.00
343	36.00	57.90
344	37.00	53.00
345	39.00	50.00
346	40.50	50.00
347	43.00	50.00
348	45.00	50.00
349	48.00	50.00
350	51.00	52.00
351	56.00	58.70
352	64.00	70.00
353	68.00	70.00
354	70.00	70.00
355	65.50	64.60
356	61.00	28.90
357	55.00	−5.00
358	50.00	−10.00
359	45.00	−10.00
360	38.00	−10.00
361	28.00	−10.00
362	19.00	−10.00
363	14.00	−10.00
364	7.00	−10.00
365	2.00	−5.00
366	3.00	5.00
367	7.00	25.00
368	9.00	38.00
369	7.00	17.00
370	4.00	2.00
371	3.00	−9.00
372	3.00	−10.00
373	11.00	70.00
374	15.00	97.60
375	16.00	100.00
376	19.00	100.00
377	26.00	100.00
378	29.00	95.00
379	25.00	63.00
380	19.00	−10.00
381	12.00	−10.00
382	8.00	−10.00
383	5.00	−10.00
384	2.00	−10.00
385	1.00	−10.00
386	0.0	0.0
387	0.0	0.0
388	0.0	0.0
389	0.0	0.0
390	0.0	0.0
391	0.0	0.0
392	0.0	0.0
393	0.0	0.0
394	0.0	0.0
395	0.0	0.0
396	0.0	0.0
397	0.0	0.0
398	0.0	0.0
399	0.0	0.0
400	0.0	0.0
401	0.0	0.0
402	0.0	0.0
403	0.0	0.0
404	0.0	0.0
405	0.0	0.0
406	0.0	0.0

Record (seconds)	Percent	
	Normalized revolutions per minute	Normalized torque
407	0.0	0.0
408	0.0	0.0
409	0.0	0.0
410	0.0	0.0
411	0.0	0.0
412	0.0	0.0
413	0.0	0.0
414	0.0	0.0
415	0.0	0.0
416	0.0	0.0
417	0.0	0.0
418	0.0	0.0
419	4.00	20.00
420	4.00	20.00
421	0.0	0.0
422	0.0	0.0
423	0.0	0.0
424	0.0	0.0
425	0.0	0.0
426	0.0	0.0
427	0.0	0.0
428	0.0	0.0
429	0.0	0.0
430	2.00	0.0
431	6.00	2.00
432	14.00	28.80
433	20.00	30.00
434	24.40	11.00
435	24.00	10.00
436	24.00	12.00
437	28.00	52.00
438	32.00	52.00
439	34.00	46.00
440	34.00	30.00
441	34.50	30.00
442	35.00	30.00
443	36.00	35.00
444	39.00	40.00
445	45.00	50.00
446	49.00	56.00
447	50.00	−8.00
448	45.00	−10.00
449	39.00	−10.00
450	34.00	−10.00
451	28.00	−10.00
452	25.00	−10.00
453	21.00	−10.00
454	18.00	−10.00
455	15.00	−10.00
456	12.00	−10.00
457	18.00	−8.00
458	29.00	19.80
459	40.00	54.00
460	52.00	82.00
461	64.00	95.00
462	71.00	99.00
463	77.00	100.00
464	84.00	100.00
465	85.00	99.00
466	85.00	95.00
467	84.00	90.00
468	82.00	84.60
469	80.00	78.50
470	78.00	78.50
471	77.00	70.00
472	76.00	65.50
473	74.00	61.50
474	72.00	56.00
475	70.00	52.00
476	68.00	46.00
477	66.50	40.00

Record (seconds)	Percent	
	Normalized revolutions per minute	Normalized torque
478	65.00	32.00
479	63.00	26.00
480	61.00	25.60
481	61.00	72.00
482	61.00	78.00
483	58.00	72.00
484	50.00	64.00
485	44.00	55.00
486	35.00	40.00
487	26.00	20.00
488	21.00	−4.00
489	18.00	−10.00
490	16.00	−10.00
491	19.00	−8.00
492	24.00	2.00
493	32.00	68.50
494	45.00	78.00
495	51.00	86.00
496	58.00	92.00
497	64.00	97.00
498	71.00	100.00
499	73.00	98.00
500	73.00	94.00
501	73.00	86.00
502	73.00	82.00
503	76.00	84.00
504	80.00	98.00
505	84.00	100.00
506	85.00	100.00
507	84.00	100.00
508	81.00	92.00
509	75.00	80.00
510	73.00	70.00
511	70.00	60.00
512	67.00	53.00
513	65.00	45.00
514	63.00	36.50
515	62.00	28.00
516	61.00	22.50
517	60.00	23.00
518	60.00	24.00
519	60.00	24.00
520	60.00	26.00
521	61.00	60.00
522	62.00	64.00
523	63.00	64.00
524	64.00	64.00
525	62.00	64.00
526	56.00	60.00
527	53.00	−7.00
528	49.00	−10.00
529	47.00	−10.00
530	46.00	−10.00
531	45.00	−7.00
532	45.00	30.00
533	46.00	50.00
534	46.00	50.00
535	47.00	50.00
536	47.00	50.00
537	47.00	30.00
538	46.00	12.00
539	45.00	10.50
540	44.00	10.00
541	41.00	10.00
542	37.00	9.00
543	36.00	2.00
544	35.00	−10.00
545	38.00	67.00
546	35.00	−10.00
547	31.00	15.00
548	28.00	55.00

Record (seconds)	Percent	
	Normalized revolutions per minute	Normalized torque
549	34.00	44.00
550	35.00	38.50
551	36.00	38.50
552	36.00	38.50
553	37.00	38.50
554	39.00	36.00
555	42.00	27.00
556	45.00	62.00
557	48.00	45.00
558	51.00	15.00
559	51.00	8.00
560	51.00	6.00
561	48.00	10.00
562	46.00	11.00
563	44.00	13.00
564	41.00	17.00
565	37.00	20.00
566	34.00	20.00
567	30.00	17.00
568	26.00	14.00
569	23.00	7.00
570	19.00	2.00
571	15.00	−5.00
572	11.00	−10.00
573	8.00	−10.00
574	5.00	−8.00
575	2.00	−5.00
576	0.0	0.0
577	0.0	0.0
578	0.0	0.0
579	0.0	0.0
580	0.0	0.0
581	0.0	0.0
582	0.0	0.0
583	4.00	15.00
584	19.00	31.00
585	30.00	46.00
586	37.00	68.00
587	40.00	76.00
588	41.00	77.00
589	40.50	78.00
590	40.00	77.00
591	40.00	64.00
592	38.00	10.00
593	38.00	25.00
594	40.00	50.00
595	40.00	36.00
596	40.00	31.00
597	40.00	31.00
598	41.00	37.00
599	42.00	97.00
600	43.00	100.00
601	45.00	100.00
602	47.00	100.00
603	48.00	100.00
604	49.00	100.00
605	51.00	97.00
606	52.00	94.00
607	53.00	90.00
608	54.00	87.00
609	56.00	86.00
610	56.00	85.00
611	55.50	85.00
612	55.00	81.00
613	54.00	77.00
614	53.00	72.00
615	52.00	67.00
616	49.00	60.00
617	46.00	45.00
618	45.00	12.00
619	44.00	10.00

Record (seconds)	Percent	
	Normalized revolutions per minute	Normalized torque
620	44.00	10.00
621	45.00	12.00
622	46.00	14.00
623	47.00	24.00
624	49.00	88.00
625	50.00	90.00
626	51.00	90.00
627	52.00	90.00
628	53.00	90.00
629	54.00	90.00
630	54.00	90.00
631	54.00	87.00
632	54.00	84.00
633	54.00	80.00
634	53.50	77.00
635	53.00	76.00
636	53.00	75.00
637	52.00	73.00
638	51.00	69.00
639	50.00	65.00
640	50.00	60.00
641	49.00	55.00
642	49.00	50.00
643	49.00	50.00
644	49.50	60.00
645	49.50	65.00
646	50.00	70.00
647	50.50	75.00
648	51.00	80.00
649	52.00	85.00
650	53.00	90.00
651	54.00	90.00
652	55.00	90.00
653	55.00	88.00
654	55.00	84.00
655	55.00	79.00
656	55.00	74.00
657	55.00	69.00
658	55.00	64.00
659	55.00	59.00
660	55.00	54.00
661	55.00	49.00
662	55.00	44.50
663	55.00	39.00
664	55.00	34.00
665	55.00	27.00
666	55.00	18.00
667	55.00	8.00
668	55.00	6.00
669	55.00	13.00
670	55.00	27.00
671	55.50	30.00
672	56.00	30.00
673	57.00	30.00
674	58.00	34.00
675	59.00	46.00
676	59.00	89.00
677	59.00	90.00
678	59.00	91.00
679	59.00	91.00
680	60.00	91.00
681	60.00	91.00
682	60.50	90.00
683	61.00	89.00
684	61.50	88.00
685	62.00	83.00
686	63.00	73.00
687	65.00	70.00
688	66.00	71.00
689	67.00	74.00
690	67.50	79.00
691	68.00	85.00
692	68.50	90.00
693	69.00	94.00
694	69.50	96.00
695	70.00	98.00
696	70.50	100.00
697	71.00	100.00
698	72.00	100.00
699	72.00	100.00
700	72.00	100.00
701	72.00	100.00
702	72.00	100.00
703	72.00	100.00
704	72.00	100.00
705	72.00	100.00
706	72.00	100.00
707	72.50	100.00
708	73.00	100.00
709	73.50	100.00
710	74.00	100.00
711	74.00	100.00
712	74.50	100.00
713	75.00	100.00
714	75.00	100.00
715	75.00	100.00
716	75.00	100.00
717	75.00	100.00
718	75.00	100.00
719	75.00	100.00
720	75.00	100.00
721	75.00	100.00
722	75.00	100.00
723	75.00	98.00
724	75.00	90.00
725	75.00	34.00
726	74.00	15.00
727	72.00	3.00
728	70.00	−7.00
729	69.00	−10.00
730	68.00	−10.00
731	70.50	53.00
732	73.00	80.00
733	75.00	88.00
734	77.00	94.00
735	79.00	97.00
736	82.00	97.00
737	85.00	98.00
738	85.00	98.00
739	87.00	97.00
740	90.00	95.00
741	92.00	90.00
742	93.00	88.00
743	94.00	86.00
744	95.00	83.00
745	96.00	79.00
746	97.00	74.00
747	98.00	68.00
748	99.00	62.00
749	100.00	54.00
750	100.00	30.00
751	100.00	22.00
752	100.00	20.00
753	100.00	22.00
754	100.00	30.00
755	100.00	65.00
756	100.00	76.00
757	100.00	80.00
758	100.00	78.00
759	100.00	72.00
760	100.00	54.00
761	95.00	30.00

Record (seconds)	Percent	
	Normalized revolutions per minute	Normalized torque
762	85.00	12.00
763	68.00	−5.00
764	57.00	−9.00
765	56.00	−10.00
766	57.00	−9.00
767	57.00	−5.00
768	57.00	22.00
769	58.00	40.00
770	59.00	45.00
771	59.00	46.00
772	59.50	45.00
773	60.00	33.00
774	60.00	0.0
775	60.00	−10.00
776	60.00	−10.00
777	60.00	34.00
778	60.00	50.00
779	60.00	60.00
780	60.00	69.00
781	60.00	75.00
782	60.00	79.00
783	61.00	83.00
784	61.00	84.00
785	61.00	85.00
786	62.00	85.00
787	62.00	85.00
788	62.00	85.00
789	63.00	85.00
790	63.00	85.00
791	64.00	85.00
792	64.00	85.00
793	64.00	85.00
794	64.00	85.00
795	64.00	85.00
796	64.00	84.50
797	64.00	84.00
798	64.00	83.00
799	64.00	82.00
800	64.00	81.00
801	64.00	77.00
802	64.00	72.00
803	65.00	67.00
804	66.00	64.00
805	67.00	60.00
806	69.00	62.30
807	72.00	84.00
808	73.00	90.50
809	74.00	91.00
810	74.00	90.00
811	74.00	84.50
812	73.00	74.00
813	72.00	66.00
814	71.00	60.00
815	70.00	54.00
816	69.00	50.00
817	68.00	49.00
818	68.00	48.00
819	68.00	48.00
820	68.00	48.50
821	68.00	49.00
822	68.00	51.00
823	68.00	53.50
824	68.00	55.00
825	68.00	58.00
826	68.00	60.00
827	68.00	62.00
828	68.00	64.00
829	68.00	67.00
830	69.00	68.50
831	70.00	70.00
832	70.00	70.00
833	70.00	70.00
834	70.00	70.00
835	70.00	70.00
836	70.00	70.00
837	71.00	66.00
838	73.00	64.00
839	75.00	64.00
840	77.00	98.00
841	79.00	100.00
842	81.00	100.00
843	82.00	100.00
844	83.00	100.00
845	84.00	98.00
846	84.00	94.00
847	85.00	93.00
848	86.00	94.00
849	87.00	98.00
850	89.00	100.00
851	92.00	100.00
852	95.00	100.00
853	97.50	100.00
854	100.00	100.00
855	100.00	100.00
856	100.00	100.00
857	100.00	100.00
858	100.00	97.00
859	96.00	−6.00
860	94.00	−10.00
861	91.00	−10.00
862	88.00	−10.00
863	86.00	−10.00
864	84.00	−10.00
865	82.00	−10.00
866	79.00	−10.00
867	77.00	−10.00
868	75.00	−10.00
869	73.00	−10.00
870	72.00	−10.00
871	72.00	−10.00
872	72.00	−8.00
873	71.00	8.00
874	68.00	9.00
875	64.00	−9.00
876	58.00	−8.00
877	56.00	53.00
878	56.00	67.00
879	56.00	70.00
880	56.00	67.00
881	55.00	60.00
882	54.00	60.00
883	49.00	75.00
884	38.00	80.00
885	30.00	78.00
886	25.00	53.00
887	18.00	32.00
888	14.00	16.00
889	9.00	3.00
890	5.00	−6.00
891	1.00	−10.00
892	0.0	0.0
893	0.0	0.0
894	0.0	0.0
895	0.0	0.0
896	0.0	0.0
987	0.0	0.0
898	0.0	0.0
899	0.0	0.0
900	0.0	0.0
901	0.0	0.0
902	0.0	0.0
903	0.0	0.0

Record (seconds)	Percent	
	Normalized revolutions per minute	Normalized torque
904	0.0	0.0
905	0.0	0.0
906	0.0	0.0
907	0.0	0.0
908	0.0	0.0
909	0.0	0.0
910	0.0	0.0
911	0.0	0.0
912	0.0	0.0
913	0.0	0.0
914	0.0	0.0
915	0.0	0.0
916	0.0	0.0
917	0.0	0.0
918	0.0	0.0
919	0.0	0.0
920	4.50	47.00
921	12.00	85.00
922	30.00	97.00
923	42.00	100.00
924	51.00	100.00
925	54.00	100.00
926	54.00	97.00
927	52.00	90.00
928	48.00	75.00
929	44.00	57.00
930	37.00	47.00
931	29.00	40.00
932	24.00	34.00
933	21.00	27.00
934	22.00	24.00
935	22.50	22.00
936	20.00	16.00
937	15.00	7.00
938	10.00	0.0
939	5.00	−7.00
940	2.00	−10.00
941	1.00	−10.00
942	0.0	0.0
943	0.0	0.0
944	0.0	0.0
945	1.00	0.0
946	5.00	20.00
947	15.00	43.00
948	28.00	52.00
949	34.00	64.00
950	37.00	74.00
951	37.50	90.00
952	37.00	56.00
953	36.00	27.00
954	35.00	−2.00
955	33.00	−8.00
956	29.00	−10.00
957	29.00	−8.00
958	29.00	−2.00
959	34.00	30.00
960	38.00	75.00
961	34.00	70.00
962	31.00	25.00
963	28.00	−7.00
964	26.00	−10.00
965	24.00	−7.00
966	23.00	4.00
967	23.00	22.00
968	24.00	30.00
969	23.00	32.00
970	22.00	25.00
971	18.00	18.00
972	16.00	14.00
973	15.00	10.00
974	15.00	0.0

Record (seconds)	Percent	
	Normalized revolutions per minute	Normalized torque
975	15.00	−7.00
976	15.00	−10.00
977	18.00	−8.00
978	25.00	40.00
979	37.00	90.00
980	46.00	90.00
981	49.00	90.00
982	49.00	90.00
983	49.00	85.00
984	47.00	77.00
985	44.00	59.00
986	43.00	36.00
987	42.00	13.00
988	40.00	−10.00
989	41.00	65.00
990	44.00	65.00
991	45.00	65.00
992	45.00	62.00
993	44.00	56.00
994	42.00	46.00
995	41.00	36.00
996	39.00	20.00
997	38.00	4.00
998	37.00	33.00
999	38.00	39.00
1,000	36.00	40.00
1,001	35.00	40.00
1,002	33.00	39.00
1,003	30.00	36.00
1,004	27.00	33.00
1,005	22.00	24.00
1,006	21.00	−5.00
1,007	20.00	−10.00
1,008	18.00	−6.00
1,009	17.00	28.00
1,010	16.00	5.00
1,011	14.00	−5.00
1,012	12.00	−9.00
1,013	9.00	−10.00
1,014	7.00	−10.00
1,015	5.00	−10.00
1,016	4.00	−10.00
1,017	3.00	−10.00
1,018	2.00	−10.00
1,019	0.0	0.0
1,020	0.0	0.0
1,021	0.0	0.0
1,022	0.0	0.0
1,023	0.0	0.0
1,024	0.0	0.0
1,025	2.00	7.00
1,026	6.00	15.00
1,027	10.00	28.00
1,028	11.00	26.00
1,029	10.00	10.00
1,030	8.00	3.00
1,031	5.00	0.0
1,032	2.00	0.0
1,033	0.0	0.0
1,034	0.0	0.0
1,035	0.0	0.0
1,036	0.0	0.0
1,037	0.0	0.0
1,038	0.0	0.0
1,039	0.0	0.0
1,040	0.0	0.0
1,041	0.0	0.0
1,042	0.0	0.0
1,043	0.0	0.0
1,044	0.0	0.0
1,045	0.0	0.0

Record (seconds)	Percent	
	Normalized revolutions per minute	Normalized torque
1,046	0.0	0.0
1,047	0.0	0.0
1,048	0.0	0.0
1,049	0.0	0.0
1,050	0.0	0.0
1,051	0.0	0.0
1,052	0.0	0.0
1,053	0.0	0.0
1,054	0.0	0.0
1,055	0.0	0.0
1,056	0.0	0.0
1,057	0.0	0.0
1,058	0.0	0.0
1,059	0.0	0.0
1,060	0.0	0.0
1,061	4.00	05.00
1,062	11.00	35.00
1,063	21.00	73.00
1,064	25.00	86.00
1,065	26.00	90.00
1,066	25.00	90.00
1,067	23.00	83.00
1,068	20.00	32.00
1,069	16.00	−6.00
1,070	14.00	−10.00
1,071	10.00	−10.00
1,072	7.00	−10.00
1,073	3.00	−10.00
1,074	1.00	−10.00
1,075	0.0	0.0
1,076	0.0	0.0
1,077	0.0	0.0
1,078	0.0	0.0
1,079	0.0	0.0
1,080	0.0	0.0
1,081	0.0	0.0
1,082	0.0	0.0
1,083	0.0	0.0
1,084	0.0	0.0
1,085	0.0	0.0
1,086	0.0	0.0
1,087	0.0	0.0
1,088	0.0	0.0
1,089	0.0	0.0
1,090	0.0	0.0
1,091	0.0	0.0
1,092	0.0	0.0
1,093	0.0	0.0
1,094	0.0	0.0
1,095	0.0	0.0
1,096	0.0	0.0
1,097	0.0	0.0
1,098	1.00	3.00
1,099	3.00	6.00
1,100	6.00	13.00
1,101	9.00	14.00
1,102	12.00	16.00
1,103	15.00	28.00
1,104	18.00	60.00
1,105	20.00	47.00
1,106	21.00	31.00
1,107	21.00	15.00
1,108	20.00	−2.00
1,109	20.00	−10.00
1,110	20.00	−2.00
1,111	20.00	70.00
1,112	21.00	83.00
1,113	22.00	84.00
1,114	22.00	83.00
1,115	18.00	78.00
1,116	14.00	68.00
1,117	8.00	10.00
1,118	4.00	4.00
1,119	1.00	0.0
1,120	0.0	0.0
1,121	0.0	0.0
1,122	0.0	0.0
1,123	0.0	0.0
1,124	0.0	0.0
1,125	0.0	1.00
1,126	1.00	5.00
1,127	5.00	18.00
1,128	9.00	19.00
1,129	12.00	18.00
1,130	12.00	15.00
1,131	9.00	10.00
1,132	5.00	5.00
1,133	2.00	2.00
1,134	0.0	0.0
1,135	0.0	0.0
1,136	0.0	0.0
1,137	0.0	0.0
1,138	0.0	0.0
1,139	0.0	0.0
1,140	0.0	0.0
1,141	0.0	0.0
1,142	0.0	0.0
1,143	0.0	0.0
1,144	0.0	0.0
1,145	0.0	0.0
1,146	0.0	0.0
1,147	0.0	0.0
1,148	0.0	0.0
1,149	0.0	0.0
1,150	0.0	0.0
1,151	0.0	0.0
1,152	0.0	0.0
1,153	0.0	0.0
1,154	0.0	0.0
1,155	0.0	0.0
1,156	0.0	0.0
1,157	0.0	0.0
1,158	0.0	0.0
1,159	0.0	0.0
1,160	0.0	0.0
1,161	0.0	0.0
1,162	0.0	0.0
1,163	0.0	0.0
1,164	0.0	0.0
1,165	0.0	0.0
1,166	0.0	0.0
1,167	0.0	0.0

(2) EPA Engine Dynamometer Schedule for Heavy-Duty Diesel Engines.

Record (seconds)	Percent	
	Normalized revolutions per minute	Normalized torque
1	0.0	0.0
2	0.0	0.0
3	0.0	0.0
4	0.0	0.0
5	0.0	0.0
6	0.0	0.0
7	0.0	0.0
8	0.0	0.0
9	0.0	0.0
10	0.0	0.0

Record (seconds)	Percent	
	Normalized revolutions per minute	Normalized torque
11	0.0	0.0
12	0.0	0.0
13	0.0	0.0
14	0.0	0.0
15	0.0	0.0
16	0.0	0.0
17	0.0	0.0
18	0.0	0.0
19	0.0	0.0
20	0.0	0.0
21	0.0	0.0
22	0.0	0.0
23	0.0	0.0
24	0.0	0.0
25	0.0	3.67
26	0.0	47.69
27	3.11	59.41
28	9.09	84.54
29	15.62	80.00
30	33.49	80.00
31	37.93	79.29
32	31.20	38.25
33	21.99	26.67
34	30.00	15.10
35	22.23	16.47
36	19.61	28.05
37	20.00	20.38
38	18.33	(1)
39	6.55	(1)
40	15.82	(1)
41	23.63	(1)
42	17.51	(1)
43	14.19	62.52
44	16.64	69.36
45	27.77	60.00
46	37.03	63.79
47	47.36	75.36
48	54.77	80.00
49	57.70	80.00
50	54.03	79.92
51	58.00	65.03
52	58.65	43.23
53	62.88	50.00
54	69.83	50.00
55	72.00	42.05
56	75.81	40.00
57	84.22	42.20
58	83.86	41.28
59	80.55	(1)
60	80.51	(1)
61	78.00	(1)
62	79.79	(1)
63	80.33	30.54
64	85.58	42.12
65	81.78	50.00
66	78.00	50.00
67	80.74	43.16
68	92.10	73.65
69	88.01	(1)
70	84.00	(1)
71	84.00	(1)
72	81.17	(1)
73	70.46	(1)
74	66.00	13.57
75	62.23	29.43
76	64.00	20.00
77	63.48	17.42
78	60.34	10.00
79	56.85	10.00
80	56.00	(1)
81	52.45	(1)
82	39.91	10.00
83	36.38	10.00
84	30.00	10.00
85	27.93	10.00
86	26.00	16.74
87	27.66	3.36
88	28.00	(1)
89	27.41	(1)
90	20.96	(1)
91	12.15	(1)
92	3.81	(1)
93	0.0	0.0
94	0.0	0.0
95	0.0	0.91
96	0.0	7.52
97	0.0	0.0
98	0.0	0.0
99	0.0	0.0
100	0.0	0.0
101	0.0	0.0
102	0.0	0.0
103	0.0	0.0
104	0.0	0.0
105	0.0	0.0
106	0.0	0.0
107	0.0	0.0
108	0.0	0.0
109	0.0	0.0
110	0.0	0.0
111	0.0	0.0
112	0.0	0.0
113	0.0	0.0
114	0.0	0.0
115	0.0	0.0
116	0.0	0.0
117	0.0	0.0
118	0.0	0.0
119	0.0	0.0
120	0.0	0.0
121	0.0	0.0
122	0.0	0.0
123	0.0	0.0
124	0.0	0.0
125	0.0	0.0
126	0.0	0.0
127	0.0	0.0
128	0.0	0.0
129	1.77	(1)
130	1.60	(1)
131	0.0	0.0
132	0.0	0.0
133	2.14	9.28
134	3.08	0.0
135	0.0	0.0
136	0.0	0.0
137	0.0	0.0
138	0.0	0.0
139	0.0	0.0
140	0.0	0.0
141	0.0	0.0
142	0.0	0.0
143	0.0	0.0
144	0.0	0.0
145	0.0	0.0
146	0.0	0.0
147	0.0	5.51
148	0.0	11.34
149	0.0	0.0
150	0.0	0.0
151	0.0	0.0
152	0.0	0.0

Record (seconds)	Percent	
	Normalized revolutions per minute	Normalized torque
153	0.0	0.0
154	0.0	0.0
155	0.0	0.0
156	0.0	0.0
157	0.0	0.0
158	0.0	0.21
159	0.0	30.00
160	0.0	26.78
161	0.0	20.00
162	0.0	20.00
163	0.0	4.12
164	0.0	0.0
165	0.0	0.0
166	0.0	0.0
167	0.0	0.0
168	0.0	0.0
169	0.0	0.0
170	0.0	0.0
171	0.0	0.0
172	0.0	0.0
173	0.0	0.0
174	0.0	0.0
175	0.0	0.0
176	0.0	0.0
177	0.0	0.0
178	0.0	0.0
179	0.0	0.0
180	0.0	0.0
181	0.0	0.0
182	0.0	0.0
183	0.0	0.0
184	0.0	20.00
185	0.0	20.00
186	0.0	11.73
187	0.0	0.0
188	0.0	0.0
189	0.0	0.0
190	0.0	0.0
191	0.0	0.0
192	0.0	0.0
193	0.0	0.0
194	0.0	0.0
195	0.0	0.0
196	0.0	0.0
197	0.0	0.0
198	0.0	0.0
199	0.0	0.0
200	0.0	0.0
201	0.0	0.0
202	0.0	0.0
203	0.0	0.0
204	0.0	0.0
205	0.0	0.0
206	0.0	0.0
207	0.0	0.0
208	0.0	0.0
209	0.0	0.0
210	0.0	0.0
211	0.0	0.0
212	0.0	0.0
213	0.0	0.0
214	0.0	73.41
215	0.0	90.00
216	31.30	81.30
217	41.15	90.00
218	44.00	90.00
219	46.41	90.00
220	51.04	82.41
221	66.66	80.00
222	75.03	90.00
223	89.85	90.00

Record (seconds)	Percent	
	Normalized revolutions per minute	Normalized torque
224	96.78	93.88
225	96.91	50.94
226	94.60	17.02
227	99.16	28.60
228	100.00	39.83
229	100.00	30.00
230	100.00	26.69
231	100.98	20.00
232	100.71	20.00
233	100.00	36.06
234	96.16	40.00
235	95.77	30.00
236	94.55	32.75
237	96.86	35.68
238	99.18	30.00
239	100.00	44.93
240	101.81	50.00
241	86.54	(1)
242	63.56	(1)
243	56.00	(1)
244	46.00	(1)
245	41.86	45.18
246	38.31	78.47
247	35.98	80.00
248	31.03	80.00
249	25.36	80.00
250	23.05	60.97
251	18.20	27.34
252	12.84	43.71
253	10.10	68.95
254	3.79	68.95
255	1.48	44.28
256	0.0	0.0
257	0.0	0.0
258	0.0	0.0
259	0.0	0.0
260	0.0	0.0
261	0.0	0.0
262	0.0	0.0
263	0.0	24.97
264	0.0	17.16
265	0.0	6.20
266	0.0	10.00
267	0.0	10.00
268	0.0	0.0
269	0.0	0.0
270	0.0	0.0
271	0.0	0.0
272	0.0	0.0
273	0.0	0.0
274	0.0	0.0
275	0.0	0.0
276	0.0	0.0
277	0.0	0.0
278	0.0	0.0
279	0.0	0.0
280	0.0	0.0
281	0.0	0.0
282	0.0	0.0
283	0.0	0.0
284	0.0	0.0
285	0.0	0.0
286	0.0	0.0
287	0.0	0.0
288	0.0	0.0
289	0.0	0.0
290	0.0	0.0
291	0.0	0.0
292	0.0	0.0
293	0.0	0.0
294	0.0	0.0

Record (seconds)	Percent	
	Normalized revolutions per minute	Normalized torque
295	0.0	0.0
296	0.0	0.0
297	0.0	0.0
298	0.0	0.0
299	0.0	0.0
300	0.0	0.0
301	0.0	0.0
302	0.0	0.0
303	0.0	0.0
304	0.0	0.0
305	0.0	0.0
306	0.0	0.0
307	0.0	0.0
308	0.0	0.0
309	0.0	0.0
310	0.0	0.0
311	0.0	0.0
312	0.0	0.0
313	0.0	0.0
314	0.0	0.0
315	0.0	0.0
316	0.0	0.0
317	0.0	0.0
318	0.0	0.0
319	0.0	0.0
320	0.0	0.0
321	0.0	15.55
322	0.0	20.00
323	24.18	19.08
324	23.00	10.00
325	11.56	1.86
326	6.87	(1)
327	6.00	(1)
328	0.72	(1)
329	0.0	0.0
330	0.0	0.0
331	0.0	0.0
332	0.0	0.0
333	0.0	0.0
334	0.0	0.0
335	0.0	0.0
336	0.0	0.0
337	0.0	0.0
338	0.0	0.0
339	0.0	0.0
340	0.0	0.0
341	0.0	0.0
342	0.0	0.0
343	0.0	0.0
344	0.0	0.0
345	0.0	0.0
346	0.0	0.0
347	0.0	0.0
348	0.0	0.0
349	0.0	0.0
350	0.0	0.0
351	0.0	0.0
352	0.0	0.0
353	0.0	0.0
354	0.0	0.0
355	0.0	0.0
356	0.0	0.0
357	0.0	0.0
358	0.0	0.0
359	0.0	0.0
360	0.0	0.0
361	0.0	0.0
362	0.0	0.0
363	0.0	0.0
364	0.0	0.0
365	0.0	0.0
366	0.0	0.0
367	0.0	0.0
368	0.0	0.0
369	0.0	0.0
370	0.0	0.0
371	0.0	0.0
372	0.0	0.0
373	0.0	0.0
374	0.0	0.0
375	0.0	0.0
376	0.0	0.0
377	0.0	29.59
378	−1.50	87.46
379	8.88	100.00
380	46.04	100.00
381	76.89	100.00
382	80.00	100.00
383	82.14	94.64
384	85.39	83.07
385	87.70	88.51
386	92.00	79.83
387	92.00	61.66
388	94.58	66.77
389	102.88	60.00
390	106.00	72.76
391	109.18	8.43
392	111.91	(1)
393	82.00	(1)
394	79.33	(1)
395	71.15	(1)
396	68.84	(1)
397	78.35	49.17
398	82.00	70.00
399	80.65	69.46
400	92.85	60.00
401	97.48	60.00
402	98.95	60.00
403	100.74	60.00
404	103.68	43.17
405	104.00	10.04
406	80.62	20.00
407	83.37	20.00
408	81.06	15.29
409	80.00	10.00
410	76.86	(1)
411	74.11	(1)
412	71.60	(1)
413	70.58	(1)
414	78.00	(1)
415	80.29	1.45
416	80.54	17.30
417	78.23	11.13
418	78.45	19.55
419	84.36	24.16
420	72.16	80.00
421	79.10	74.83
422	90.09	16.04
423	74.04	(1)
424	68.02	(1)
425	68.53	(1)
426	59.39	(1)
427	63.54	(1)
428	70.00	2.38
429	73.10	17.76
430	72.13	(1)
431	67.27	(1)
432	36.03	(1)
433	20.75	(1)
434	11.49	(1)
435	−2.09	0.0
436	−0.73	0.0

Record (seconds)	Percent	
	Normalized revolutions per minute	Normalized torque
437	8.57	60.00
438	30.55	61.93
439	67.10	63.00
440	86.03	39.85
441	89.33	30.00
442	91.64	30.00
443	97.88	10.40
444	97.73	1.37
445	96.00	10.00
446	96.00	0.96
447	96.00	(1)
448	85.27	28.34
449	87.54	30.76
450	86.16	29.18
451	88.00	20.00
452	87.21	20.00
453	86.00	20.00
454	87.42	20.00
455	88.00	11.32
456	77.84	(1)
457	72.00	(1)
458	71.32	(1)
459	70.00	0.04
460	70.00	(1)
461	74.88	(1)
462	74.06	(1)
463	67.74	(1)
464	66.00	(1)
465	64.23	(1)
466	62.00	(1)
467	55.94	(1)
468	54.00	(1)
469	66.43	(1)
470	75.21	70.00
471	86.00	54.53
472	86.00	24.56
473	88.81	(1)
474	90.00	(1)
475	105.48	(1)
476	74.00	(1)
477	73.34	(1)
478	71.02	10.00
479	76.46	29.38
480	81.61	40.00
481	78.16	30.39
482	74.13	26.46
483	90.00	0.0
484	90.87	0.0
485	92.00	(1)
486	93.50	(1)
487	94.00	(1)
488	94.13	(1)
489	88.96	(1)
490	63.25	(1)
491	62.00	(1)
492	49.54	45.37
493	52.49	86.99
494	64.00	90.00
495	64.99	90.00
496	71.93	93.22
497	78.87	95.21
498	82.00	83.64
499	86.76	80.00
500	93.71	80.00
501	94.87	80.00
502	103.60	80.00
503	101.23	41.89
504	95.48	24.85
505	98.00	50.00
506	99.79	50.00
507	106.21	46.82
508	110.84	(1)
509	98.55	(1)
510	70.95	(1)
511	67.27	(1)
512	60.96	(1)
513	48.03	(1)
514	52.31	(1)
515	54.00	(1)
516	65.27	(1)
517	78.00	(1)
518	57.61	(1)
519	42.58	(1)
520	38.81	(1)
521	22.37	(1)
522	3.52	(1)
523	0.0	0.0
524	−1.46	36.39
525	−0.23	5.75
526	0.0	0.0
527	0.0	0.0
528	0.0	0.0
529	0.0	0.0
530	0.0	0.0
531	0.0	0.0
532	0.0	0.0
533	0.0	0.0
534	0.0	0.0
535	0.0	0.0
536	0.0	0.0
537	0.0	0.0
538	0.0	0.0
539	0.0	0.0
540	0.0	0.0
541	0.0	0.0
542	0.0	0.0
543	0.0	0.0
544	0.0	(1)
545	0.0	0.0
546	−0.75	0.0
547	−0.56	0.0
548	4.00	(1)
549	0.68	(1)
550	0.0	0.0
551	0.0	0.0
552	0.0	2.60
553	0.0	20.00
554	0.0	20.00
555	0.0	7.96
556	0.0	0.0
557	0.0	0.0
558	0.0	78.53
559	1.85	60.00
560	11.10	63.88
561	16.00	70.00
562	30.05	70.00
563	42.88	70.00
564	56.10	70.00
565	63.39	66.52
566	70.66	59.94
567	72.98	80.00
568	77.87	86.46
569	88.03	90.00
570	90.00	90.00
571	92.23	100.00
572	94.00	100.00
573	94.86	100.00
574	96.00	100.00
575	97.49	100.00
576	108.84	100.00
577	110.00	83.92
578	104.77	(1)

Record (seconds)	Percent	
	Normalized revolutions per minute	Normalized torque
579	87.50	(1)
580	90.00	0.0
581	91.38	(1)
582	81.84	(1)
583	65.99	(1)
584	63.68	(1)
585	60.73	(1)
586	57.05	(1)
587	53.47	(1)
588	50.42	(1)
589	44.31	(1)
590	37.58	37.91
591	33.48	20.00
592	31.16	20.00
593	28.85	20.00
594	22.13	20.00
595	9.31	(1)
596	0.0	0.0
597	0.0	0.0
598	0.0	0.0
599	0.0	0.0
600	0.0	0.0
601	0.0	0.0
602	0.0	0.0
603	0.0	0.0
604	0.0	0.0
605	0.0	0.0
606	2.52	6.30
607	10.30	17.87
608	13.89	20.00
609	20.20	20.00
610	24.07	22.59
611	33.33	17.50
612	40.30	(1)
613	47.85	(1)
614	66.00	7.78
615	68.00	10.93
616	67.59	32.04
617	66.00	40.00
618	67.04	40.00
619	68.00	40.00
620	68.00	48.33
621	75.93	99.53
622	78.00	100.00
623	78.00	100.00
624	77.07	100.00
625	76.00	100.00
626	76.00	100.00
627	76.00	100.00
628	75.63	100.00
629	73.00	97.50
630	76.81	90.00
631	80.26	90.00
632	83.44	90.00
633	84.00	98.79
634	84.00	100.00
635	83.61	100.00
636	82.00	100.00
637	83.02	94.91
638	86.67	90.00
639	89.65	90.00
640	90.00	99.81
641	89.45	100.00
642	86.00	100.00
643	86.00	95.47
644	87.22	90.00
645	88.00	90.00
646	88.00	80.74
647	88.00	79.17
648	88.00	77.21
649	88.00	100.00
650	88.00	94.45
651	88.00	90.00
652	88.00	90.00
653	90.00	90.00
654	89.63	90.00
655	88.68	90.00
656	90.00	90.00
657	90.00	90.00
658	91.63	81.86
659	92.00	80.00
660	90.00	81.29
661	89.43	92.86
662	87.11	100.00
663	86.00	100.00
664	86.00	100.00
665	89.66	100.00
666	90.00	99.27
667	90.46	90.00
668	92.78	90.00
669	95.09	90.00
670	100.22	82.97
671	102.00	80.00
672	102.00	70.18
673	102.00	80.00
674	97.34	50.07
675	87.02	(1)
676	86.00	(1)
677	73.12	22.19
678	75.77	39.62
679	75.76	48.80
680	75.11	37.23
681	78.00	34.34
682	80.37	40.00
683	77.51	47.49
684	81.44	50.00
685	82.13	39.36
686	84.00	27.79
687	84.00	16.21
688	84.00	15.36
689	85.39	26.93
690	86.00	30.00
691	86.00	30.08
692	85.67	40.00
693	84.65	40.00
694	86.00	35.20
695	87.28	30.00
696	88.00	22.05
697	86.09	(1)
698	83.78	(1)
699	81.47	(1)
700	81.70	(1)
701	85.16	(1)
702	84.52	(1)
703	82.21	(1)
704	79.89	(1)
705	77.58	(1)
706	76.00	6.31
707	79.16	0.0
708	75.16	27.36
709	72.00	40.00
710	72.00	40.00
711	74.00	38.44
712	74.00	30.00
713	74.00	30.00
714	74.00	36.28
715	72.43	47.86
716	68.23	59.43
717	73.80	50.00
718	72.52	50.00
719	74.00	45.85
720	72.85	57.18

Record (seconds)	Percent	
	Normalized revolutions per minute	Normalized torque
721	76.38	62.70
722	81.55	60.00
723	80.18	60.00
724	83.60	60.00
725	83.44	56.40
726	86.00	50.00
727	87.35	50.00
728	86.34	50.00
729	86.00	40.11
730	88.29	61.47
731	88.78	63.92
732	86.92	50.00
733	86.76	50.00
734	87.55	42.24
735	88.00	49.34
736	86.00	50.91
737	86.00	67.45
738	86.00	81.88
739	87.13	70.00
740	89.44	77.21
741	91.76	88.78
742	90.07	89.65
743	92.00	80.00
744	92.70	80.00
745	94.00	80.00
746	94.00	80.00
747	94.00	80.00
748	94.00	80.00
749	94.00	81.37
750	94.59	87.05
751	96.00	57.40
752	96.00	42.19
753	96.00	42.33
754	96.00	40.00
755	96.00	38.37
756	96.00	12.83
757	96.00	(1)
758	96.00	(1)
759	96.00	(1)
760	97.74	7.37
761	100.05	19.74
762	102.00	11.83
763	102.00	26.81
764	103.00	49.96
765	104.00	60.00
766	102.37	60.00
767	103.94	60.00
768	104.00	40.00
769	104.00	25.75
770	103.12	(1)
771	100.80	(1)
772	100.00	(1)
773	101.83	44.88
774	102.00	36.40
775	102.00	(1)
776	102.00	(1)
777	100.91	(1)
778	101.40	(1)
779	100.28	(1)
780	97.97	(1)
781	96.00	(1)
782	96.00	10.00
783	96.00	0.23
784	96.00	(1)
785	96.00	(1)
786	94.08	(1)
787	78.00	(1)
788	77.45	(1)
789	71.67	28.96
790	67.18	80.00
791	66.50	87.48
792	71.43	90.00
793	74.13	90.00
794	75.56	92.20
795	74.75	100.00
796	77.07	94.65
797	79.38	83.08
798	80.00	71.51
799	80.01	69.93
800	82.33	58.36
801	84.00	50.00
802	84.00	59.58
803	84.00	76.36
804	84.00	80.00
805	84.00	70.49
806	82.00	80.00
807	81.47	82.66
808	80.00	90.00
809	77.68	90.00
810	74.52	75.24
811	77.58	78.96
812	81.89	80.00
813	80.42	80.00
814	82.00	83.68
815	83.05	79.50
816	84.00	70.00
817	84.00	61.60
818	84.00	50.03
819	86.00	60.00
820	86.00	60.00
821	86.00	69.39
822	88.51	73.73
823	88.43	70.00
824	88.00	70.00
825	94.00	70.99
826	94.51	80.00
827	95.17	80.00
828	95.14	80.00
829	94.54	80.00
830	94.00	80.00
831	94.00	77.89
832	94.00	31.99
833	94.00	43.57
834	94.00	60.28
835	94.00	63.29
836	94.00	76.57
837	94.00	89.86
838	94.29	90.00
839	97.80	87.00
840	102.91	80.00
841	104.00	73.85
842	104.00	62.28
843	104.00	69.29
844	106.00	70.00
845	106.00	62.70
846	106.00	40.00
847	104.88	40.00
848	104.00	32.85
849	104.00	30.00
850	104.00	0.30
851	103.63	11.87
852	100.62	13.12
853	98.00	5.01
854	96.68	10.00
855	96.00	(1)
856	96.00	(1)
857	96.00	(1)
858	95.43	(1)
859	94.00	(1)
860	94.00	(1)
861	95.52	5.18
862	97.83	(1)

Record (seconds)	Percent	
	Normalized revolutions per minute	Normalized torque
863	98.00	(1)
864	98.00	(1)
865	97.22	(1)
866	96.00	6.35
867	96.00	12.98
868	96.00	10.00
869	95.93	10.00
870	92.00	10.00
871	92.00	10.00
872	92.98	14.89
873	94.00	13.54
874	90.79	42.12
875	88.08	40.40
876	86.23	30.00
877	88.00	32.75
878	87.14	44.32
879	84.82	50.00
880	82.51	50.00
881	82.00	50.00
882	82.12	40.00
883	83.13	35.64
884	80.00	20.00
885	84.26	51.95
886	86.62	66.21
887	84.31	60.00
888	81.99	9.96
889	79.35	1.61
890	75.36	19.56
891	73.05	40.00
892	70.73	8.35
893	68.42	(1)
894	47.15	8.95
895	35.79	10.00
896	32.95	7.38
897	29.16	(1)
898	16.47	(1)
899	2.13	(1)
900	0.0	0.0
901	0.0	0.0
902	0.0	0.0
903	0.0	0.0
904	0.0	0.0
905	0.0	0.0
906	0.0	0.0
907	0.0	0.0
908	0.0	0.0
909	0.0	0.0
910	0.0	0.0
911	0.0	0.0
912	0.0	0.0
913	0.0	0.0
914	0.0	0.0
915	0.0	0.0
916	0.0	0.0
917	0.0	0.0
918	0.0	0.0
919	0.0	0.0
920	0.0	0.0
921	0.0	0.0
922	0.0	0.0
923	0.0	0.0
924	0.0	0.0
925	0.0	0.0
926	0.0	0.0
927	0.0	3.67
928	0.0	47.69
929	3.11	59.41
930	9.09	84.54
931	15.62	80.00
932	33.49	80.00
933	37.93	79.29
934	31.20	38.25
935	21.99	26.67
936	30.00	15.10
937	22.23	16.47
938	19.61	28.05
939	20.00	20.38
940	18.33	(1)
941	6.55	(1)
942	15.82	(1)
943	23.63	(1)
944	17.51	(1)
945	14.19	62.52
946	16.64	69.36
947	27.77	60.00
948	37.03	63.79
949	47.36	75.36
950	54.77	80.00
951	57.70	80.00
952	54.03	79.92
953	58.00	65.03
954	58.65	43.23
955	62.88	50.00
956	69.83	50.00
957	72.00	42.05
958	75.81	40.00
959	84.22	42.20
960	83.86	41.28
961	80.55	(1)
962	80.51	(1)
963	78.00	(1)
964	79.79	(1)
965	80.33	30.54
966	85.58	42.12
967	81.78	50.00
968	78.00	50.00
969	80.74	43.16
970	92.10	73.65
971	88.01	(1)
972	84.00	(1)
973	84.00	(1)
974	81.17	(1)
975	70.46	(1)
976	66.00	13.57
977	62.23	29.43
978	64.00	20.00
979	63.48	17.42
980	60.34	10.00
981	56.85	10.00
982	56.00	(1)
983	52.45	(1)
984	39.91	10.00
985	36.38	10.00
986	30.00	10.00
987	27.93	10.00
988	26.00	16.74
989	27.66	3.36
990	28.00	(1)
991	27.41	(1)
992	20.96	(1)
993	12.15	(1)
994	3.81	(1)
995	0.0	0.0
996	0.0	0.0
997	0.0	0.91
998	0.0	7.52
999	0.0	0.0
1,000	0.0	0.0
1,001	0.0	0.0
1,002	0.0	0.0
1,003	0.0	0.0
1,004	0.0	0.0

Record (seconds)	Percent	
	Normalized revolutions per minute	Normalized torque
1,005	0.0	0.0
1,006	0.0	0.0
1,007	0.0	0.0
1,008	0.0	0.0
1,009	0.0	0.0
1,010	0.0	0.0
1,011	0.0	0.0
1,012	0.0	0.0
1,013	0.0	0.0
1,014	0.0	0.0
1,015	0.0	0.0
1,016	0.0	0.0
1,017	0.0	0.0
1,018	0.0	0.0
1,019	0.0	0.0
1,020	0.0	0.0
1,021	0.0	0.0
1,022	0.0	0.0
1,023	0.0	0.0
1,024	0.0	0.0
1,025	0.0	0.0
1,026	0.0	0.0
1,027	0.0	0.0
1,028	0.0	0.0
1,029	0.0	0.0
1,030	0.0	0.0
1,031	1.77	(1)
1,032	1.60	(1)
1,033	0.0	0.0
1,034	0.0	0.0
1,035	2.14	9.28
1,036	3.08	0.0
1,037	0.0	0.0
1,038	0.0	0.0
1,039	0.0	0.0
1,040	0.0	0.0
1,041	0.0	0.0
1,042	0.0	0.0
1,043	0.0	0.0
1,044	0.0	0.0
1,045	0.0	0.0
1,046	0.0	0.0
1,047	0.0	0.0
1,048	0.0	0.0
1,049	0.0	5.51
1,050	0.0	11.34
1,051	0.0	0.0
1,052	0.0	0.0
1,053	0.0	0.0
1,054	0.0	0.0
1,055	0.0	0.0
1,056	0.0	0.0
1,057	0.0	0.0
1,058	0.0	0.0
1,059	0.0	0.0
1,060	0.0	0.21
1,061	0.0	30.00
1,062	0.0	26.78
1,063	0.0	20.00
1,064	0.0	20.00
1,065	0.0	4.12
1,066	0.0	0.0
1,067	0.0	0.0
1,068	0.0	0.0
1,069	0.0	0.0
1,070	0.0	0.0
1,071	0.0	0.0
1,072	0.0	0.0
1,073	0.0	0.0
1,074	0.0	0.0
1,075	0.0	0.0
1,076	0.0	0.0
1,077	0.0	0.0
1,078	0.0	0.0
1,079	0.0	0.0
1,080	0.0	0.0
1,081	0.0	0.0
1,082	0.0	0.0
1,083	0.0	0.0
1,084	0.0	0.0
1,085	0.0	0.0
1,086	0.0	20.00
1,087	0.0	20.00
1,088	0.0	11.73
1,089	0.0	0.0
1,090	0.0	0.0
1,091	0.0	0.0
1,092	0.0	0.0
1,093	0.0	0.0
1,094	0.0	0.0
1,095	0.0	0.0
1,096	0.0	0.0
1,097	0.0	0.0
1,098	0.0	0.0
1,099	0.0	0.0
1,100	0.0	0.0
1,101	0.0	0.0
1,102	0.0	0.0
1,103	0.0	0.0
1,104	0.0	0.0
1,105	0.0	0.0
1,106	0.0	0.0
1,107	0.0	0.0
1,108	0.0	0.0
1,109	0.0	0.0
1,110	0.0	0.0
1,111	0.0	0.0
1,112	0.0	0.0
1,113	0.0	0.0
1,114	0.0	0.0
1,115	0.0	0.0
1,116	0.0	73.41
1,117	0.0	90.00
1,118	31.30	81.30
1,119	41.15	90.00
1,120	44.00	90.00
1,121	46.41	90.00
1,122	51.04	82.41
1,123	66.66	80.00
1,124	75.03	90.00
1,125	89.85	90.00
1,126	96.78	93.88
1,127	96.91	50.94
1,128	94.60	17.02
1,129	99.16	28.60
1,130	100.00	39.83
1,131	100.00	30.00
1,132	100.00	26.69
1,133	100.98	20.00
1,134	100.71	20.00
1,135	100.00	36.06
1,136	96.16	40.00
1,137	95.77	30.00
1,138	94.55	32.75
1,139	96.86	35.68
1,140	99.18	30.00
1,141	100.00	44.93
1,142	101.81	50.00
1,143	86.54	(1)
1,144	63.56	(1)
1,145	56.00	(1)
1,146	46.00	(1)

Record (seconds)	Percent	
	Normalized revolutions per minute	Normalized torque
1,147	41.86	45.18
1,148	38.31	78.47
1,149	35.98	80.00
1,150	31.03	80.00
1,151	25.36	80.00
1,152	23.05	60.97
1,153	18.20	27.34
1,154	12.84	43.71
1,155	10.10	68.95
1,156	3.79	68.95
1,157	1.48	44.28
1,158	0.0	0.0
1,159	0.0	0.0
1,160	0.0	0.0
1,161	0.0	0.0
1,162	0.0	0.0
1,163	0.0	0.0
1,164	0.0	0.0
1,165	0.0	24.97
1,166	0.0	17.16
1,167	0.0	6.20
1,168	0.0	10.00
1,169	0.0	10.00
1,170	0.0	0.0
1,171	0.0	0.0
1,172	0.0	0.0
1,173	0.0	0.0
1,174	0.0	0.0
1,175	0.0	0.0
1,176	0.0	0.0
1,177	0.0	0.0
1,178	0.0	0.0
1,179	0.0	0.0
1,180	0.0	0.0
1,181	0.0	0.0
1,182	0.0	0.0
1,183	0.0	0.0
1,184	0.0	0.0
1,185	0.0	0.0
1,186	0.0	0.0
1,187	0.0	0.0
1,188	0.0	0.0
1,189	0.0	0.0
1,190	0.0	0.0
1,191	0.0	0.0
1,192	0.0	0.0
1,193	0.0	0.0
1,194	0.0	0.0
1,195	0.0	0.0
1,196	0.0	0.0
1,197	0.0	0.0
1,198	0.0	0.0
1,199	0.0	0.0

[1] Closed throttle motoring.

(3) Optional EPA Engine Dynamometer Schedule for Heavy-duty Otto-cycle engines.

Record (seconds)	Percent	
	Normalized revolutions per minute	Normalized torque
1	0.0	0.0
2	0.0	0.0
3	0.0	0.0
4	0.0	0.0
5	0.0	0.0
6	0.0	0.0
7	0.0	0.0
8	0.0	0.0
9	0.0	0.0
10	0.0	0.0
11	0.0	0.0
12	0.0	0.0
13	0.0	0.0
14	0.0	0.0
15	0.0	0.0
16	0.0	0.0
17	0.0	0.0
18	0.0	0.0
19	0.0	0.0
20	0.0	0.0
21	0.0	0.0
22	0.0	0.0
23	0.0	0.0
24	0.0	0.0
25	−1.78	44.40
26	0.0	85.35
27	4.25	100.00
28	27.47	100.00
29	42.96	100.00
30	45.79	100.00
31	48.11	99.46
32	50.42	90.00
33	52.74	75.23
34	54.00	50.00
35	44.42	8.96
36	45.05	−10.00
37	46.00	9.99
38	37.69	−10.00
39	31.61	5.68
40	22.94	35.29
41	24.00	4.87
42	20.86	−10.00
43	12.45	−10.00
44	6.00	−10.00
45	6.52	−10.00
46	7.17	−10.00
47	2.56	−10.00
48	0.0	0.0
49	0.0	0.0
50	0.0	0.0
51	0.0	10.11
52	4.32	46.40
53	8.90	45.17
54	1.95	50.00
55	3.33	41.68
56	4.00	89.46
57	13.76	55.60
58	26.43	26.96
59	33.85	6.16
60	36.00	−10.00
61	34.45	−10.00
62	34.00	−10.00
63	35.64	−10.00
64	32.99	27.39
65	36.00	80.00
66	41.63	74.37
67	60.41	26.76
68	48.44	−10.00
69	43.86	−10.00
70	40.39	−10.00
71	38.50	4.01
72	35.05	30.00
73	40.66	16.70
74	43.64	26.45
75	45.96	−10.00
76	47.10	−10.00
77	49.29	−10.00
78	37.10	−10.00

Record (seconds)	Percent	
	Normalized revolutions per minute	Normalized torque
79	36.00	−10.00
80	34.47	−10.00
81	32.15	−10.00
82	31.67	−10.00
83	28.48	13.89
84	32.38	90.00
85	36.00	90.00
86	41.69	90.00
87	45.74	90.00
88	49.95	80.00
89	49.10	80.00
90	50.59	62.97
91	45.99	34.98
92	42.76	7.23
93	35.12	−10.00
94	32.06	67.92
95	35.53	62.55
96	46.57	68.60
97	49.77	48.85
98	52.00	60.00
99	58.06	60.00
100	63.66	23.42
101	64.14	17.84
102	59.58	3.76
103	38.00	42.26
104	39.09	30.00
105	40.00	30.00
106	34.85	47.18
107	32.03	10.33
108	34.00	33.48
109	34.00	50.00
110	33.02	20.69
111	25.54	−10.00
112	15.57	−10.00
113	14.00	−10.00
114	14.47	27.64
115	18.00	4.49
116	17.13	−10.00
117	16.00	−10.00
118	10.02	−10.00
119	9.81	−10.00
120	5.88	−10.00
121	4.00	−10.00
122	4.00	−10.00
123	2.93	−10.00
124	0.62	−10.00
125	0.0	0.0
126	0.0	0.0
127	0.0	0.0
128	0.0	0.0
129	0.0	0.0
130	0.0	10.00
131	0.0	10.00
132	0.0	29.02
133	0.0	27.83
134	0.0	7.34
135	0.0	0.0
136	0.0	0.0
137	0.0	0.0
138	0.0	0.0
139	0.0	0.0
140	0.0	0.0
141	0.0	0.0
142	0.0	0.0
143	0.0	0.0
144	0.0	0.0
145	0.0	0.0
146	2.00	0.0
147	1.38	0.0
148	0.0	0.0
149	0.0	6.27
150	0.0	2.16
151	0.0	0.0
152	0.0	0.0
153	0.0	0.0
154	0.83	−10.00
155	2.00	−10.00
156	0.54	−10.00
157	0.0	0.0
158	0.0	0.0
159	0.0	0.0
160	0.0	0.0
161	0.0	0.0
162	0.0	0.0
163	0.0	0.0
164	0.0	0.0
165	0.0	0.0
166	0.0	0.0
167	0.0	22.01
168	1.23	72.29
169	6.63	80.00
170	17.29	89.29
171	22.17	90.00
172	24.00	82.70
173	24.00	31.96
174	24.00	−10.00
175	22.57	−10.00
176	22.00	−10.00
177	13.88	−10.00
178	10.00	−10.00
179	9.31	−10.00
180	3.99	−10.00
181	0.0	0.0
182	0.0	0.0
183	0.0	0.0
184	0.0	0.0
185	0.0	0.0
186	0.0	0.0
187	0.0	0.0
188	0.0	0.0
189	0.0	0.0
190	0.0	0.0
191	0.0	0.0
192	0.0	0.0
193	0.0	0.0
194	0.0	0.0
195	0.0	0.0
196	0.0	0.0
197	0.0	0.0
198	0.0	0.0
199	0.0	0.0
200	0.0	0.0
201	0.0	0.0
202	0.0	0.0
203	0.0	0.0
204	−2.52	6.30
205	−4.22	15.28
206	0.0	10.00
207	0.0	10.00
208	0.0	10.00
209	0.0	75.93
210	0.0	32.22
211	1.67	35.00
212	15.48	29.82
213	25.46	−10.00
214	24.22	−10.00
215	23.44	−10.00
216	12.41	80.00
217	8.94	83.61
218	7.26	84.82
219	16.70	80.00
220	24.67	63.33

Record (seconds)	Percent	
	Normalized revolutions per minute	Normalized torque
221	0.24	79.81
222	0.0	8.52
223	0.0	0.0
224	0.0	0.0
225	0.0	0.0
226	0.0	0.0
227	0.0	0.0
228	0.0	0.0
229	0.0	0.0
230	0.0	0.0
231	0.0	0.0
232	0.0	0.0
233	0.0	17.59
234	0.0	19.63
235	0.0	10.00
236	0.0	10.00
237	0.0	10.00
238	0.0	3.34
239	0.0	0.0
240	0.0	0.0
241	0.0	0.0
242	0.0	0.0
243	0.0	0.0
244	0.0	0.0
245	0.0	0.0
246	0.0	0.0
247	0.0	0.0
248	0.0	0.0
249	0.0	0.0
250	0.0	0.0
251	0.0	0.0
252	0.0	0.0
253	0.0	0.0
254	0.0	0.0
255	0.0	0.0
256	0.0	0.0
257	0.0	0.0
258	0.0	0.0
259	0.0	0.0
260	0.0	0.0
261	0.0	0.0
262	0.0	0.0
263	0.0	0.0
264	0.0	0.0
265	0.0	0.0
266	0.0	0.0
267	0.0	0.0
268	0.0	0.0
269	0.0	0.0
270	0.0	0.0
271	0.0	0.0
272	0.0	0.0
273	0.0	0.0
274	0.0	0.0
275	0.0	0.0
276	0.0	0.0
277	0.0	0.0
278	0.0	0.0
279	0.0	0.0
280	0.0	0.0
281	0.0	4.17
282	1.15	10.00
283	2.00	10.00
284	0.22	10.00
285	0.0	0.0
286	0.0	0.0
287	0.0	0.0
288	0.0	0.0
289	0.0	0.0
290	0.0	0.0
291	0.0	0.0

Record (seconds)	Percent	
	Normalized revolutions per minute	Normalized torque
292	0.0	0.0
293	0.0	0.0
294	0.0	0.0
295	0.0	0.0
296	0.0	0.0
297	0.0	0.0
298	0.0	0.0
299	0.0	0.0
300	0.0	4.07
301	0.0	10.00
302	0.0	17.22
303	0.0	20.00
304	0.0	20.37
305	2.33	31.94
306	16.22	36.48
307	24.00	24.91
308	24.00	13.34
309	19.06	10.00
310	18.00	−10.00
311	17.17	−10.00
312	9.04	−10.00
313	1.09	−10.00
314	0.0	0.0
315	0.0	0.0
316	0.0	0.0
317	0.0	0.0
318	0.0	0.0
319	0.0	0.0
320	0.0	0.0
321	0.0	0.0
322	0.0	0.0
323	0.0	0.82
324	0.37	41.08
325	2.68	90.00
326	6.00	94.99
327	11.94	100.00
328	15.63	100.00
329	41.26	90.28
330	46.26	90.00
331	44.56	67.08
332	36.00	1.12
333	27.58	50.12
334	23.52	90.00
335	24.00	90.00
336	26.29	70.00
337	30.00	65.38
338	30.00	34.47
339	30.00	10.00
340	30.00	10.00
341	30.00	10.00
342	30.18	60.00
343	40.00	58.25
344	40.67	50.00
345	41.02	50.00
346	40.00	50.00
347	41.61	50.00
348	42.00	50.00
349	46.00	50.00
350	48.22	50.00
351	59.21	58.69
352	67.18	70.00
353	71.00	70.00
354	72.00	70.00
355	72.13	68.08
356	74.89	28.94
357	68.91	−10.00
358	49.71	−10.00
359	41.84	−10.00
360	38.30	−10.00
361	35.93	−10.00
362	28.00	−10.00

Record (seconds)	Percent	
	Normalized revolutions per minute	Normalized torque
363	23.48	−10.00
364	10.16	−10.00
365	4.72	−10.00
366	0.82	5.90
367	−9.53	19.53
368	2.20	45.60
369	20.53	7.33
370	21.15	0.0
371	17.67	−10.00
372	13.04	−10.00
373	8.41	79.70
374	10.33	100.00
375	17.27	100.00
376	22.00	100.00
377	25.16	100.00
378	29.37	100.00
379	36.73	66.35
380	40.00	−10.00
381	23.50	−10.00
382	9.37	−10.00
383	8.00	−10.00
384	6.74	−10.00
385	2.86	−10.00
386	0.11	−10.00
387	0.0	0.0
388	0.0	0.0
389	0.0	0.0
390	0.0	0.0
391	0.0	0.0
392	0.0	0.0
393	0.0	0.0
394	0.0	0.0
395	0.0	0.0
396	0.0	0.0
397	0.0	0.0
398	0.0	0.0
399	0.0	0.0
400	0.0	0.0
401	0.0	0.0
402	0.0	0.0
403	0.0	0.0
404	0.0	0.0
405	0.0	0.0
406	0.0	0.0
407	0.0	0.0
408	0.0	0.0
409	0.0	0.0
410	0.0	0.0
411	0.0	0.0
412	0.0	0.0
413	0.0	0.0
414	0.0	0.0
415	0.0	0.0
416	0.0	0.0
417	0.0	0.0
418	0.0	0.0
419	2.27	20.00
420	2.82	14.11
421	0.0	0.0
422	0.0	0.0
423	0.0	0.0
424	0.0	0.0
425	0.0	0.0
426	0.0	0.0
427	0.0	0.0
428	0.0	0.0
429	0.0	0.0
430	0.0	0.0
431	0.26	0.78
432	16.60	31.83
433	45.32	29.78

Record (seconds)	Percent	
	Normalized revolutions per minute	Normalized torque
434	43.00	10.00
435	40.69	10.00
436	35.12	10.00
437	28.18	19.70
438	28.26	47.45
439	30.00	30.00
440	30.00	30.00
441	30.00	30.00
442	34.54	30.00
443	36.00	30.00
444	36.43	30.00
445	43.84	30.00
446	50.00	30.00
447	50.00	24.56
448	50.00	20.00
449	50.00	−10.00
450	37.97	−10.00
451	35.30	−10.00
452	30.68	−10.00
453	27.02	−10.00
454	26.00	−10.00
455	26.00	−10.00
456	20.24	−10.00
457	14.00	−10.00
458	13.45	18.27
459	9.40	52.99
460	10.72	81.81
461	15.50	97.48
462	19.62	100.00
463	20.25	100.00
464	25.76	100.00
465	35.02	100.00
466	42.14	94.65
467	44.00	90.00
468	45.70	90.00
469	51.99	60.00
470	50.00	60.00
471	51.29	63.22
472	54.96	70.00
473	56.00	70.00
474	62.35	38.25
475	71.61	30.00
476	76.22	50.00
477	78.00	50.00
478	78.00	41.53
479	55.93	12.58
480	38.52	0.0
481	34.42	71.65
482	36.11	79.47
483	38.84	67.90
484	42.74	60.00
485	44.00	54.75
486	49.46	36.35
487	52.00	30.00
488	32.05	−10.00
489	25.69	0.0
490	24.00	0.0
491	24.00	−10.00
492	20.24	−10.00
493	10.16	68.43
494	8.00	80.58
495	10.20	80.99
496	13.54	90.00
497	18.00	94.13
498	20.28	100.00
499	22.00	100.00
500	23.77	91.15
501	28.08	90.00
502	30.00	86.01
503	32.85	80.70
504	32.86	100.00

Record (seconds)	Percent	
	Normalized revolutions per minute	Normalized torque
505	33.37	100.00
506	36.00	100.00
507	51.77	100.00
508	60.57	95.72
509	64.00	70.00
510	64.91	70.00
511	75.83	70.00
512	82.00	70.00
513	85.72	51.42
514	86.17	49.14
515	88.49	35.13
516	90.00	15.99
517	91.12	26.74
518	92.00	32.85
519	93.74	30.00
520	89.29	−10.00
521	66.00	41.87
522	67.38	56.88
523	80.02	54.96
524	93.95	66.34
525	97.63	63.69
526	94.11	60.00
527	85.66	−10.00
528	70.00	−10.00
529	69.11	−10.00
530	66.80	−10.00
531	64.48	−10.00
532	53.00	44.98
533	52.73	49.27
534	62.00	40.00
535	62.00	43.88
536	64.18	44.55
537	53.36	4.88
538	46.28	15.79
539	46.00	19.83
540	45.65	10.00
541	45.99	10.00
542	48.05	10.00
543	44.71	3.54
544	48.82	−10.00
545	51.92	66.82
546	47.53	−10.00
547	36.31	9.23
548	17.73	55.68
549	29.43	38.22
550	36.00	37.46
551	36.00	40.00
552	34.00	40.00
553	34.00	40.00
554	34.00	36.25
555	38.26	24.68
556	43.38	61.38
557	50.78	46.12
558	52.00	19.92
559	52.32	0.0
560	52.09	3.19
561	48.00	10.00
562	48.00	10.00
563	48.00	10.00
564	30.94	19.48
565	28.00	20.00
566	28.00	20.00
567	28.00	15.81
568	28.00	10.00
569	26.53	10.00
570	26.00	10.00
571	23.71	−10.00
572	17.59	−10.00
573	11.65	−10.00
574	1.92	−10.00
575	0.0	0.0
576	0.0	0.0
577	0.0	0.0
578	0.0	0.0
579	0.0	0.0
580	0.0	0.0
581	0.0	0.0
582	0.0	0.0
583	1.26	25.19
584	6.72	47.87
585	13.67	40.56
586	16.20	80.00
587	18.52	80.00
588	25.83	75.83
589	35.15	70.00
590	38.93	77.31
591	41.78	80.00
592	40.00	10.00
593	40.00	20.18
594	40.00	52.78
595	40.00	34.82
596	40.00	30.00
597	40.00	38.33
598	40.00	30.09
599	38.30	100.00
600	40.61	100.00
601	42.00	100.00
602	42.00	100.00
603	42.00	100.00
604	42.00	100.00
605	42.00	100.00
606	42.50	97.50
607	43.19	85.93
608	43.13	85.65
609	44.00	90.00
610	44.00	90.00
611	44.00	80.00
612	44.00	80.00
613	44.70	80.00
614	46.00	74.91
615	46.00	63.34
616	46.00	60.00
617	46.00	60.00
618	44.00	10.00
619	44.00	10.00
620	43.09	10.00
621	42.00	10.00
622	42.00	10.00
623	43.85	19.26
624	50.00	90.00
625	50.00	90.00
626	50.00	90.00
627	50.00	90.00
628	50.00	90.00
629	48.26	90.00
630	48.00	89.73
631	48.37	80.00
632	49.32	80.00
633	48.00	80.00
634	48.00	80.00
635	48.00	80.00
636	48.00	70.28
637	48.00	70.00
638	48.00	70.00
639	48.00	74.44
640	48.00	61.96
641	49.52	50.00
642	50.00	50.00
643	50.00	40.00
644	50.00	44.62
645	50.78	60.00
646	52.00	49.09

Record (seconds)	Percent	
	Normalized revolutions per minute	Normalized torque
647	52.00	40.00
648	52.00	40.00
649	52.04	40.89
650	54.00	90.00
651	54.00	90.00
652	54.00	85.10
653	55.29	73.53
654	56.00	70.00
655	56.00	70.00
656	56.00	60.00
657	56.00	57.23
658	56.00	50.00
659	56.00	38.17
660	56.00	30.00
661	56.00	30.00
662	54.00	39.36
663	54.00	27.79
664	54.00	20.00
665	54.00	20.00
666	54.00	20.00
667	54.00	11.49
668	54.00	0.08
669	54.00	13.31
670	54.00	30.00
671	54.96	30.00
672	57.28	30.00
673	56.41	30.00
674	57.91	30.00
675	58.22	36.60
676	60.00	90.00
677	60.00	90.00
678	60.00	95.82
679	60.00	92.60
680	60.00	90.00
681	60.00	90.00
682	60.42	90.00
683	62.74	90.00
684	65.05	90.00
685	66.00	83.16
686	66.00	71.59
687	66.00	70.00
688	66.00	70.00
689	66.00	73.14
690	66.00	80.00
691	66.00	86.28
692	66.00	90.00
693	66.00	90.00
694	68.20	100.00
695	70.00	100.00
696	70.00	100.00
697	70.00	100.00
698	74.38	100.00
699	76.00	100.00
700	72.09	100.00
701	73.60	100.00
702	72.00	100.00
703	72.00	100.00
704	72.00	100.00
705	72.00	100.00
706	72.00	100.00
707	72.29	100.00
708	73.39	100.00
709	72.92	100.00
710	74.00	100.00
711	74.00	100.00
712	77.73	100.00
713	78.00	100.00
714	77.50	100.00
715	76.00	100.00
716	76.00	100.00
717	76.00	100.00

Record (seconds)	Percent	
	Normalized revolutions per minute	Normalized torque
718	72.49	100.00
719	71.79	100.00
720	67.16	100.00
721	72.70	100.00
722	75.02	100.00
723	73.34	100.00
724	73.64	91.78
725	74.00	31.21
726	78.27	28.63
727	80.00	17.05
728	80.00	5.48
729	80.00	−10.00
730	80.00	−10.00
731	80.00	63.93
732	84.00	80.00
733	85.43	82.39
734	87.62	93.96
735	84.00	100.00
736	84.00	100.00
737	84.00	91.32
738	86.00	100.00
739	86.73	100.00
740	90.00	96.59
741	91.99	90.00
742	94.00	90.00
743	95.63	81.87
744	96.00	89.70
745	100.00	98.72
746	100.57	78.60
747	102.88	50.00
748	104.00	73.99
749	104.00	90.00
750	104.00	25.98
751	103.71	20.00
752	99.54	20.00
753	98.00	20.00
754	99.09	25.44
755	98.60	65.08
756	103.15	80.00
757	100.03	80.00
758	102.35	80.00
759	104.00	73.38
760	104.00	55.11
761	101.42	30.62
762	98.39	11.97
763	57.65	−10.00
764	58.00	−10.00
765	57.45	−10.00
766	56.00	−10.00
767	56.00	−10.00
768	56.00	27.39
769	56.00	40.00
770	56.00	50.00
771	56.00	45.60
772	56.00	33.77
773	56.00	40.00
774	60.15	5.40
775	62.00	−10.00
776	62.00	−10.00
777	62.00	41.64
778	62.00	59.65
779	62.00	75.21
780	62.00	76.36
781	62.00	80.00
782	62.00	80.00
783	62.00	80.00
784	62.00	80.00
785	61.15	80.00
786	60.00	80.00
787	60.00	87.38
788	60.00	90.00

Record (seconds)	Percent	
	Normalized revolutions per minute	Normalized torque
789	60.00	90.00
790	60.00	90.00
791	60.00	90.00
792	60.00	90.00
793	60.00	83.17
794	60.00	80.00
795	60.00	89.97
796	62.31	90.00
797	64.00	86.88
798	64.00	80.00
799	64.00	80.00
800	64.00	80.00
801	64.00	80.00
802	66.00	70.00
803	66.51	70.00
804	68.00	65.87
805	68.00	60.00
806	68.00	60.00
807	73.31	86.55
808	74.00	90.00
809	74.00	90.00
810	73.29	90.00
811	72.00	84.86
812	73.34	73.29
813	74.00	70.00
814	72.03	70.00
815	71.71	50.00
816	70.00	50.00
817	70.00	50.00
818	68.77	56.15
819	68.00	60.00
820	68.00	60.00
821	68.00	58.28
822	68.00	40.00
823	68.00	48.01
824	68.00	60.00
825	68.00	60.00
826	68.00	60.00
827	68.00	60.00
828	68.00	61.87
829	68.00	70.00
830	69.00	70.00
831	70.00	70.00
832	70.00	70.00
833	70.00	70.00
834	70.00	70.00
835	70.00	70.00
836	70.00	70.00
837	73.61	70.00
838	76.00	62.41
839	76.00	60.00
840	76.00	100.00
841	76.92	100.00
842	80.78	100.00
843	82.00	100.00
844	83.40	100.00
845	84.00	100.00
846	83.97	90.00
847	82.35	90.00
848	85.33	93.31
849	89.95	100.00
850	88.13	100.00
851	89.21	100.00
852	95.76	100.00
853	100.23	100.00
854	102.00	100.00
855	104.59	100.00
856	112.71	100.00
857	113.01	100.00
858	112.00	100.00
859	104.00	−10.00
860	103.56	−10.00
861	102.75	−10.00
862	102.94	−10.00
863	99.24	−10.00
864	94.61	−10.00
865	93.99	−10.00
866	92.32	−10.00
867	93.36	−10.00
868	92.00	−10.00
869	90.73	−10.00
870	88.42	−10.00
871	84.21	−10.00
872	82.00	10.00
873	82.00	7.38
874	82.00	−10.00
875	82.00	−10.00
876	68.79	48.69
877	64.00	70.00
878	64.00	70.00
879	58.66	67.95
880	37.27	60.00
881	34.96	60.00
882	32.65	73.54
883	30.33	80.00
884	28.02	80.00
885	25.70	50.00
886	23.39	37.76
887	21.07	10.00
888	18.76	10.00
889	14.89	−10.00
890	12.13	−10.00
891	5.45	−10.00
892	0.0	0.0
893	0.0	0.0
894	0.0	0.0
895	0.0	0.0
896	0.0	0.0
897	0.0	0.0
898	0.0	0.0
899	0.0	0.0
900	0.0	0.0
901	0.0	0.0
902	0.0	0.0
903	0.0	0.0
904	0.0	0.0
905	0.0	0.0
906	0.0	0.0
907	0.0	0.0
908	0.0	0.0
909	0.0	0.0
910	0.0	0.0
911	0.0	0.0
912	0.0	0.0
913	0.0	0.0
914	0.0	0.0
915	0.0	0.0
916	0.0	0.0
917	0.0	0.0
918	0.0	0.0
919	0.0	0.0
920	−1.78	44.40
921	0.0	85.35
922	4.25	100.00
923	27.47	100.00
924	42.96	100.00
925	45.79	100.00
926	48.11	99.46
927	50.42	90.00
928	52.74	75.23
929	54.00	50.00
930	44.42	8.96

Record (seconds)	Percent	
	Normalized revolutions per minute	Normalized torque
931	45.05	−10.00
932	46.00	9.99
933	37.69	−10.00
934	31.61	5.68
935	22.94	35.29
936	24.00	4.87
937	20.86	−10.00
938	12.45	−10.00
939	6.00	−10.00
940	6.52	−10.00
941	7.17	−10.00
942	2.56	−10.00
943	0.0	0.0
944	0.0	0.0
945	0.0	0.0
946	0.0	10.11
947	4.32	46.40
948	8.90	45.17
949	1.95	50.00
950	3.33	41.68
951	4.00	89.46
952	13.76	55.60
953	26.43	26.96
954	33.85	6.16
955	36.00	−10.00
956	34.45	−10.00
957	34.00	−10.00
958	35.64	−10.00
959	32.99	27.39
960	36.00	80.00
961	41.63	74.37
962	60.41	26.76
963	48.44	−10.00
964	43.86	−10.00
965	40.39	−10.00
966	38.50	4.01
967	35.05	30.00
968	40.66	16.70
969	43.64	26.45
970	45.96	−10.00
971	47.10	−10.00
972	49.29	−10.00
973	37.10	−10.00
974	36.00	−10.00
975	34.47	−10.00
976	32.15	−10.00
977	31.67	−10.00
978	28.48	13.89
979	32.38	90.00
980	36.00	90.00
981	41.69	90.00
982	45.74	90.00
983	49.95	80.00
984	49.10	80.00
985	50.59	62.97
986	45.99	34.98
987	42.76	7.23
988	35.12	−10.00
989	32.06	67.92
990	35.53	62.55
991	46.57	68.60
992	49.77	48.85
993	52.00	60.00
994	58.06	60.00
995	63.66	23.42
996	64.14	17.84
997	59.58	3.76
998	38.00	42.26
999	39.09	30.00
1,000	40.00	30.00
1,001	34.85	47.18
1,002	32.03	10.33
1,003	34.00	33.48
1,004	34.00	50.00
1,005	33.02	20.69
1,006	25.54	−10.00
1,007	15.57	−10.00
1,008	14.00	−10.00
1,009	14.47	27.64
1,010	18.00	4.49
1,011	17.13	−10.00
1,012	16.00	−10.00
1,013	10.02	−10.00
1,014	9.81	−10.00
1,015	5.88	−10.00
1,016	4.00	−10.00
1,017	4.00	−10.00
1,018	2.93	−10.00
1,019	0.62	−10.00
1,020	0.0	0.0
1,021	0.0	0.0
1,022	0.0	0.0
1,023	0.0	0.0
1,024	0.0	0.0
1,025	0.0	10.00
1,026	0.0	10.00
1,027	0.0	29.02
1,028	0.0	27.83
1,029	0.0	7.34
1,030	0.0	0.0
1,031	0.0	0.0
1,032	0.0	0.0
1,033	0.0	0.0
1,034	0.0	0.0
1,035	0.0	0.0
1,036	0.0	0.0
1,037	0.0	0.0
1,038	0.0	0.0
1,039	0.0	0.0
1,040	0.0	0.0
1,041	2.00	0.0
1,042	1.38	0.0
1,043	0.0	0.0
1,044	0.0	6.27
1,045	0.0	2.16
1,046	0.0	0.0
1,047	0.0	0.0
1,048	0.0	0.0
1,049	0.83	−10.00
1,050	2.00	−10.00
1,051	0.54	−10.00
1,052	0.0	0.0
1,053	0.0	0.0
1,054	0.0	0.0
1,055	0.0	0.0
1,056	0.0	0.0
1,057	0.0	0.0
1,058	0.0	0.0
1,059	0.0	0.0
1,060	0.0	0.0
1,061	0.0	0.0
1,062	0.0	22.01
1,063	1.23	72.29
1,064	6.63	80.00
1,065	17.29	89.29
1,066	22.17	90.00
1,067	24.00	82.70
1,068	24.00	31.96
1,069	24.00	−10.00
1,070	22.57	−10.00
1,071	22.00	−10.00
1,072	13.88	−10.00

Record (seconds)	Percent	
	Normalized revolutions per minute	Normalized torque
1,073	10.00	−10.00
1,074	9.31	−10.00
1,075	3.99	−10.00
1,076	0.0	0.0
1,077	0.0	0.0
1,078	0.0	0.0
1,079	0.0	0.0
1,080	0.0	0.0
1,081	0.0	0.0
1,082	0.0	0.0
1,083	0.0	0.0
1,084	0.0	0.0
1,085	0.0	0.0
1,086	0.0	0.0
1,087	0.0	0.0
1,088	0.0	0.0
1,089	0.0	0.0
1,090	0.0	0.0
1,091	0.0	0.0
1,092	0.0	0.0
1,093	0.0	0.0
1,094	0.0	0.0
1,095	0.0	0.0
1,096	0.0	0.0
1,097	0.0	0.0
1,098	0.0	0.0
1,099	−2.52	6.30
1,100	−4.22	15.28
1,101	0.0	10.00
1,102	0.0	10.00
1,103	0.0	10.00
1,104	0.0	75.93
1,105	0.0	32.22
1,106	1.67	35.00
1,107	15.48	29.82
1,108	25.46	−10.00
1,109	24.22	−10.00
1,110	23.44	−10.00
1,111	12.41	80.00
1,112	8.94	83.61
1,113	7.26	84.82
1,114	16.70	80.00
1,115	24.67	63.33
1,116	0.24	79.81
1,117	0.0	8.52
1,118	0.0	0.0
1,119	0.0	0.0
1,120	0.0	0.0
1,121	0.0	0.0
1,122	0.0	0.0
1,123	0.0	0.0
1,124	0.0	0.0
1,125	0.0	0.0
1,126	0.0	0.0
1,127	0.0	0.0
1,128	0.0	17.59
1,129	0.0	19.63
1,130	0.0	10.00
1,131	0.0	10.00
1,132	0.0	10.00
1,133	0.0	3.34
1,134	0.0	0.0
1,135	0.0	0.0
1,136	0.0	0.0
1,137	0.0	0.0
1,138	0.0	0.0
1,139	0.0	0.0
1,140	0.0	0.0
1,141	0.0	0.0
1,142	0.0	0.0
1,143	0.0	0.0
1,144	0.0	0.0
1,145	0.0	0.0
1,146	0.0	0.0
1,147	0.0	0.0
1,148	0.0	0.0
1,149	0.0	0.0
1,150	0.0	0.0
1,151	0.0	0.0
1,152	0.0	0.0
1,153	0.0	0.0
1,154	0.0	0.0
1,155	0.0	0.0
1,156	0.0	0.0
1,157	0.0	0.0
1,158	0.0	0.0
1,159	0.0	0.0
1,160	0.0	0.0
1,161	0.0	0.0
1,162	0.0	0.0
1,163	0.0	0.0
1,164	0.0	0.0
1,165	0.0	0.0
1,166	0.0	0.0
1,167	0.0	0.0

(g) EPA US06 Driving Schedule for Light-Duty Vehicles and Light-Duty Trucks.

EPA US06 Driving Schedule

[Speed versus Time Sequence]

Time (sec)	Speed (mph)
0	0.0
1	0.0
2	0.0
3	0.0
4	0.0
5	0.0
6	0.2
7	0.7
8	1.1
9	1.7
10	6.0
11	13.9
12	20.5
13	25.7
14	25.0
15	28.4
16	32.3
17	34.6
18	36.5
19	38.4
20	39.9
21	42.2
22	43.8
23	44.2
24	43.4
25	42.6
26	40.3
27	39.2
28	38.4
29	38.4
30	39.2
31	38.8
32	38.8
33	36.5
34	32.3
35	27.6

EPA US06 DRIVING SCHEDULE—Continued

[Speed versus Time Sequence]

Time (sec)	Speed (mph)
36	22.3
37	17.3
38	11.5
39	5.8
40	1.2
41	0.0
42	0.0
43	0.0
44	0.0
45	0.0
46	0.0
47	0.0
48	0.0
49	0.8
50	9.2
51	14.9
52	18.2
53	22.2
54	27.2
55	31.4
56	33.8
57	37.2
58	40.8
59	44.0
60	46.3
61	47.6
62	49.5
63	51.2
64	53.0
65	54.4
66	55.6
67	56.4
68	56.1
69	56.2
70	55.8
71	55.1
72	54.4
73	54.2
74	54.4
75	54.2
76	53.5
77	52.3
78	52.0
79	51.9
80	51.8
81	51.9
82	52.0
83	52.5
84	53.4
85	54.9
86	56.8
87	58.8
88	60.6
89	62.3
90	64.2
91	66.2
92	67.8
93	69.4
94	70.4
95	70.6
96	70.7
97	70.3
98	68.2
99	66.5
100	64.9
101	63.7
102	62.5
103	61.0
104	59.3
105	57.7

EPA US06 DRIVING SCHEDULE—Continued

[Speed versus Time Sequence]

Time (sec)	Speed (mph)
106	56.0
107	54.5
108	52.8
109	51.2
110	49.5
111	48.0
112	46.3
113	44.0
114	41.1
115	38.8
116	37.7
117	36.6
118	35.3
119	30.0
120	24.4
121	19.8
122	15.5
123	10.8
124	6.3
125	3.2
126	2.1
127	1.2
128	0.0
129	0.0
130	0.0
131	0.0
132	0.0
133	0.0
134	0.0
135	0.0
136	2.7
137	9.2
138	16.1
139	22.7
140	29.2
141	34.2
142	38.8
143	43.0
144	45.3
145	46.8
146	48.0
147	49.5
148	50.3
149	51.5
150	52.2
151	52.6
152	53.0
153	53.8
154	53.8
155	53.8
156	54.6
157	56.3
158	56.9
159	58.1
160	58.4
161	59.6
162	59.9
163	60.2
164	60.5
165	59.7
166	58.3
167	58.1
168	57.8
169	57.3
170	57.5
171	56.6
172	57.0
173	56.6
174	56.5
175	56.2

EPA US06 DRIVING SCHEDULE—Continued

[Speed versus Time Sequence]

Time (sec)	Speed (mph)
176	56.4
177	56.6
178	56.4
179	56.1
180	56.0
181	55.9
182	54.8
183	54.2
184	54.6
185	52.2
186	54.7
187	55.7
188	57.0
189	58.0
190	58.1
191	59.4
192	59.9
193	61.0
194	61.4
195	61.9
196	62.5
197	62.5
198	62.7
199	62.2
200	62.5
201	63.1
202	62.7
203	62.8
204	63.0
205	64.1
206	63.9
207	64.1
208	64.3
209	64.5
210	64.9
211	65.3
212	66.0
213	66.0
214	66.4
215	64.1
216	63.6
217	63.9
218	64.1
219	63.7
220	64.3
221	64.2
222	63.9
223	64.2
224	63.4
225	64.0
226	63.9
227	64.0
228	63.8
229	64.0
230	63.3
231	63.4
232	63.9
233	64.0
234	64.3
235	64.8
236	65.1
237	64.0
238	64.2
239	63.1
240	63.7
241	63.1
242	63.7
243	63.5
244	63.0
245	63.1

EPA US06 DRIVING SCHEDULE—Continued

[Speed versus Time Sequence]

Time (sec)	Speed (mph)
246	63.0
247	63.3
248	63.4
249	63.3
250	62.5
251	62.5
252	62.9
253	62.8
254	62.2
255	62.4
256	62.3
257	62.3
258	62.4
259	62.1
260	62.5
261	62.8
262	62.3
263	62.3
264	62.4
265	61.9
266	62.8
267	62.8
268	62.3
269	62.8
270	62.4
271	62.1
272	61.9
273	61.8
274	62.1
275	62.1
276	62.1
277	62.0
278	62.4
279	62.2
280	62.2
281	62.4
282	62.7
283	62.6
284	63.7
285	64.3
286	64.8
287	65.1
288	65.9
289	66.1
290	67.0
291	67.2
292	67.5
293	68.3
294	68.3
295	68.8
296	69.1
297	69.4
298	71.7
299	72.1
300	74.9
301	72.6
302	72.2
303	72.2
304	72.0
305	72.5
306	72.8
307	72.7
308	71.8
309	71.4
310	71.1
311	71.1
312	70.9
313	71.0
314	71.0
315	71.2

EPA US06 DRIVING SCHEDULE—Continued

[Speed versus Time Sequence]

Time (sec)	Speed (mph)
316	72.1
317	72.6
318	73.6
319	74.8
320	75.7
321	77.3
322	78.4
323	79.3
324	78.2
325	76.0
326	75.6
327	76.4
328	77.6
329	78.0
330	79.1
331	79.5
332	79.9
333	79.9
334	80.3
335	80.3
336	79.5
337	79.5
338	79.1
339	78.7
340	77.6
341	76.5
342	74.3
343	72.6
344	70.8
345	67.6
346	66.4
347	66.7
348	66.1
349	65.9
350	66.2
351	66.1
352	67.1
353	67.4
354	68.3
355	68.3
356	68.7
357	68.2
358	68.1
359	68.0
360	67.1
361	66.4
362	66.1
363	65.7
364	66.0
365	66.4
366	66.0
367	66.3
368	67.0
369	67.5
370	67.9
371	68.1
372	68.5
373	68.9
374	68.6
375	69.4
376	69.4
377	69.4
378	70.0
379	70.4
380	70.6
381	70.9
382	70.3
383	70.6
384	70.3
385	69.7

EPA US06 DRIVING SCHEDULE—Continued

[Speed versus Time Sequence]

Time (sec)	Speed (mph)
386	69.9
387	70.1
388	69.6
389	69.3
390	69.9
391	69.7
392	69.5
393	69.9
394	70.2
395	70.2
396	70.2
397	71.0
398	70.8
399	70.9
400	70.7
401	70.9
402	71.2
403	71.3
404	70.8
405	71.2
406	71.7
407	71.9
408	72.6
409	72.3
410	72.3
411	72.1
412	72.0
413	71.9
414	72.6
415	72.8
416	73.2
417	72.1
418	71.5
419	70.9
420	70.4
421	70.5
422	70.9
423	70.2
424	71.0
425	70.2
426	70.3
427	69.1
428	68.8
429	68.2
430	68.3
431	68.2
432	67.7
433	67.3
434	67.5
435	67.6
436	67.6
437	67.2
438	67.0
439	66.3
440	66.6
441	66.2
442	66.4
443	65.9
444	66.1
445	65.5
446	62.2
447	62.2
448	61.4
449	61.1
450	61.4
451	61.1
452	61.4
453	61.4
454	61.8
455	61.8

EPA US06 DRIVING SCHEDULE—Continued

[Speed versus Time Sequence]

Time (sec)	Speed (mph)
456	61.8
457	61.8
458	62.2
459	61.8
460	62.2
461	62.6
462	62.2
463	62.6
464	62.2
465	62.6
466	62.6
467	63.0
468	62.6
469	62.2
470	61.1
471	59.5
472	58.8
473	56.8
474	55.7
475	54.1
476	51.5
477	49.2
478	48.8
479	47.6
480	44.9
481	41.5
482	37.2
483	34.6
484	33.0
485	29.2
486	22.3
487	17.7
488	17.3
489	14.0
490	10.0
491	6.0
492	2.0
493	0.0
494	0.0
495	0.0
496	0.0
497	0.0
498	0.0
499	0.0
500	0.0
501	0.2
502	4.4
503	10.1
504	15.6
505	20.8
506	25.1
507	27.7
508	28.2
509	26.8
510	24.8
511	22.4
512	17.1
513	11.3
514	6.9
515	7.5
516	11.1
517	15.4
518	19.9
519	24.2
520	27.1
521	28.5
522	28.2
523	25.6
524	21.7
525	17.3

EPA US06 DRIVING SCHEDULE—Continued

[Speed versus Time Sequence]

Time (sec)	Speed (mph)
526	12.1
527	7.5
528	5.8
529	2.4
530	1.2
531	1.9
532	6.7
533	11.8
534	16.8
535	21.7
536	25.9
537	27.7
538	28.0
539	27.1
540	24.4
541	20.2
542	15.2
543	9.3
544	5.0
545	2.9
546	2.4
547	8.4
548	13.5
549	17.8
550	22.2
551	26.2
552	30.0
553	29.8
554	26.0
555	21.3
556	16.2
557	11.4
558	6.6
559	2.6
560	0.0
561	0.0
562	0.0
563	0.0
564	0.0
565	0.0
566	0.0
567	0.0
568	0.3
569	6.4
570	12.7
571	19.2
572	23.8
573	28.2
574	34.9
575	37.5
576	40.3
577	45.0
578	49.9
579	51.6
580	51.2
581	50.6
582	49.9
583	47.8
584	44.6
585	41.2
586	37.8
587	33.4
588	28.0
589	23.7
590	18.8
591	12.9
592	6.2
593	2.2
594	0.0
595	0.0

EPA US06 DRIVING SCHEDULE—Continued

[Speed versus Time Sequence]

Time (sec)	Speed (mph)
596	0.0
597	0.0
598	0.0
599	0.0
600	0.0

(h) EPA SC03 Driving Schedule for Light-Duty Vehicles and Light-Duty Trucks.

EPA SC03 DRIVING SCHEDULE

[Speed versus Time Sequence]

Time (sec)	Speed (mph)
0	0.0
1	0.0
2	0.0
3	0.0
4	0.0
5	0.0
6	0.0
7	0.0
8	0.0
9	0.0
10	0.0
11	0.0
12	0.0
13	0.0
14	0.0
15	0.0
16	0.0
17	0.0
18	0.0
19	0.9
20	3.0
21	2.9
22	3.3
23	3.5
24	2.2
25	1.4
26	0.0
27	0.0
28	0.0
29	0.0
30	0.0
31	0.0
32	0.0
33	0.4
34	3.3
35	6.0
36	8.0
37	8.7
38	10.0
39	12.4
40	13.8
41	14.7
42	14.8
43	16.6
44	18.3
45	19.0
46	19.2
47	19.3
48	19.7
49	20.5
50	21.0
51	21.2
52	21.6
53	22.2

EPA SC03 DRIVING SCHEDULE—Continued

[Speed versus Time Sequence]

Time (sec)	Speed (mph)
54	23.8
55	24.6
56	24.3
57	23.3
58	22.7
59	21.4
60	20.4
61	19.5
62	17.9
63	15.6
64	11.7
65	7.8
66	7.2
67	9.3
68	12.9
69	15.8
70	16.2
71	16.9
72	18.3
73	20.3
74	21.6
75	22.4
76	23.0
77	22.8
78	22.1
79	21.2
80	19.5
81	17.1
82	14.1
83	10.5
84	7.6
85	7.5
86	10.0
87	13.1
88	14.1
89	16.4
90	19.6
91	22.4
92	24.7
93	26.1
94	25.8
95	26.6
96	27.8
97	28.5
98	28.9
99	29.3
100	29.5
101	29.4
102	29.4
103	29.8
104	30.3
105	30.6
106	30.5
107	30.5
108	30.1
109	29.3
110	28.4
111	27.6
112	26.8
113	25.5
114	23.7
115	21.7
116	19.3
117	16.7
118	14.4
119	11.5
120	7.9
121	6.6
122	9.4
123	12.4

EPA SC03 DRIVING SCHEDULE—Continued

[Speed versus Time Sequence]

Time (sec)	Speed (mph)
124	14.8
125	16.1
126	19.3
127	22.6
128	25.5
129	26.4
130	26.7
131	27.8
132	29.4
133	31.1
134	32.5
135	33.6
136	34.6
137	35.4
138	36.1
139	37.0
140	37.7
141	38.1
142	38.3
143	38.1
144	37.8
145	36.6
146	34.8
147	33.2
148	32.4
149	32.3
150	32.3
151	32.4
152	32.4
153	32.4
154	32.5
155	33.3
156	34.4
157	35.5
158	36.6
159	37.4
160	38.0
161	38.4
162	38.5
163	38.6
164	38.4
165	38.2
166	37.5
167	36.9
168	36.3
169	34.8
170	33.0
171	31.4
172	30.7
173	30.3
174	30.0
175	29.3
176	27.4
177	25.1
178	21.8
179	17.2
180	12.5
181	8.1
182	4.5
183	2.0
184	1.0
185	0.6
186	0.0
187	0.0
188	0.0
189	0.0
190	0.0
191	0.0
192	0.0
193	0.0

EPA SC03 DRIVING SCHEDULE—Continued

[Speed versus Time Sequence]

Time (sec)	Speed (mph)
194	0.0
195	0.0
196	0.0
197	0.0
198	0.0
199	0.0
200	0.0
201	0.0
202	0.0
203	0.0
204	0.0
205	1.0
206	0.5
207	2.6
208	7.7
209	12.3
210	15.8
211	17.3
212	19.4
213	23.3
214	27.2
215	31.0
216	33.6
217	34.2
218	35.8
219	37.3
220	38.3
221	39.2
222	40.1
223	40.9
224	41.0
225	40.4
226	39.7
227	39.1
228	38.1
229	36.7
230	35.9
231	35.9
232	35.7
233	34.9
234	33.9
235	32.6
236	31.9
237	31.1
238	30.6
239	30.3
240	30.1
241	29.9
242	29.8
243	29.8
244	29.8
245	29.8
246	29.7
247	29.7
248	29.6
249	28.4
250	25.8
251	22.8
252	19.0
253	14.0
254	8.6
255	4.1
256	1.3
257	0.0
258	0.0
259	0.0
260	0.0
261	0.0
262	0.0
263	0.0

EPA SC03 DRIVING SCHEDULE—Continued

[Speed versus Time Sequence]

Time (sec)	Speed (mph)
264	0.0
265	0.0
266	0.0
267	0.0
268	0.0
269	0.0
270	0.0
271	0.0
272	0.0
273	0.0
274	0.0
275	0.0
276	0.0
277	0.0
278	0.0
279	0.0
280	0.0
281	0.1
282	4.5
283	9.1
284	13.6
285	18.2
286	22.6
287	26.2
288	29.3
289	32.1
290	34.5
291	36.8
292	38.4
293	40.0
294	41.2
295	41.9
296	42.2
297	42.7
298	43.0
299	43.3
300	43.5
301	43.7
302	44.3
303	45.4
304	45.9
305	46.8
306	47.6
307	48.2
308	48.6
309	48.7
310	48.6
311	49.0
312	49.8
313	50.5
314	51.2
315	52.1
316	52.7
317	53.4
318	52.4
319	54.5
320	54.8
321	54.8
322	54.7
323	54.3
324	54.0
325	53.8
326	53.5
327	53.3
328	52.9
329	52.6
330	52.0
331	51.6
332	51.0
333	50.3

EPA SC03 DRIVING SCHEDULE—Continued

[Speed versus Time Sequence]

Time (sec)	Speed (mph)
334	49.3
335	48.1
336	46.5
337	43.6
338	40.7
339	37.2
340	34.4
341	31.4
342	28.6
343	24.2
344	18.1
345	12.3
346	8.1
347	4.8
348	2.6
349	2.1
350	0.0
351	0.0
352	0.0
353	0.0
354	0.0
355	0.0
356	0.0
357	0.0
358	0.0
359	0.0
360	0.0
361	0.0
362	0.0
363	0.0
364	0.0
365	0.0
366	0.0
367	0.0
368	0.0
369	0.0
370	0.0
371	4.3
372	9.1
373	13.2
374	16.3
375	19.1
376	20.9
377	22.7
378	24.8
379	26.9
380	28.8
381	30.0
382	30.4
383	30.6
384	30.9
385	31.1
386	30.8
387	31.1
388	31.5
389	32.4
390	33.1
391	33.3
392	33.4
393	33.7
394	34.1
395	34.7
396	35.0
397	35.4
398	35.8
399	36.0
400	36.2
401	36.3
402	36.4
403	36.5

EPA SC03 DRIVING SCHEDULE—Continued

[Speed versus Time Sequence]

Time (sec)	Speed (mph)
404	36.9
405	37.2
406	37.3
407	37.8
408	38.2
409	38.6
410	38.8
411	38.6
412	38.9
413	39.0
414	38.8
415	38.6
416	38.1
417	37.6
418	37.6
419	37.3
420	37.0
421	36.6
422	36.2
423	36.0
424	36.0
425	35.5
426	34.5
427	33.0
428	31.0
429	27.5
430	22.6
431	20.0
432	19.0
433	19.4
434	19.2
435	20.6
436	22.9
437	24.6
438	25.5
439	26.9
440	27.3
441	28.2
442	29.6
443	30.2
444	30.7
445	31.3
446	31.7
447	32.2
448	32.5
449	33.0
450	33.2
451	33.3
452	33.1
453	32.7
454	32.3
455	31.9
456	31.5
457	31.2
458	30.8
459	30.5
460	30.2
461	29.9
462	30.2
463	30.6
464	30.9
465	31.2
466	31.8
467	32.4
468	32.5
469	32.3
470	32.3
471	32.8
472	32.9
473	32.8

EPA SC03 DRIVING SCHEDULE—Continued

[Speed versus Time Sequence]

Time (sec)	Speed (mph)
474	32.8
475	33.3
476	33.4
477	32.9
478	32.9
479	32.8
480	32.9
481	32.8
482	32.8
483	32.4
484	31.6
485	30.6
486	30.3
487	30.3
488	29.8
489	29.3
490	28.9
491	28.8
492	29.3
493	30.0
494	30.2
495	30.4
496	30.7
497	30.8
498	29.8
499	28.7
500	28.9
501	29.2
502	29.4
503	28.6
504	27.0
505	27.2
506	26.6
507	23.2
508	21.2
509	21.2
510	20.8
511	17.9
512	13.2
513	9.5
514	6.4
515	4.1
516	2.5
517	0.0
518	0.0
519	0.0
520	0.0
521	0.0
522	0.0
523	0.0
524	0.0
525	0.0
526	0.0
527	0.0
528	0.0
529	0.0
530	0.0
531	0.0
532	0.0
533	0.0
534	0.0
535	0.0
536	0.0
537	0.6
538	3.3
539	5.9
540	8.9
541	10.2
542	10.4
543	9.9

EPA SC03 DRIVING SCHEDULE—Continued

[Speed versus Time Sequence]

Time (sec)	Speed (mph)
544	9.9
545	10.5
546	11.3
547	12.4
548	12.8
549	14.0
550	14.6
551	15.5
552	17.0
553	17.5
554	18.1
555	18.4
556	18.5
557	18.2
558	18.5
559	18.3
560	18.2
561	17.9
562	17.7
563	17.7
564	17.3
565	17.4
566	16.8
567	17.5
568	17.7
569	17.5
570	17.6
571	17.3
572	17.4
573	17.6
574	17.6
575	17.9
576	18.0
577	17.8
578	17.7

EPA SC03 DRIVING SCHEDULE—Continued

[Speed versus Time Sequence]

Time (sec)	Speed (mph)
579	17.5
580	17.7
581	17.7
582	18.1
583	18.4
584	19.2
585	18.9
586	18.0
587	15.6
588	13.3
589	10.0
590	7.7
591	5.8
592	3.7
593	2.4
594	0.0

[42 FR 32989, June 28, 1977, as amended at 43 FR 52924, Nov. 14, 1978; 45 FR 4214, Jan. 21, 1980; 48 FR 1465, Jan. 12, 1983; 48 FR 52239, Nov. 16, 1983; 49 FR 48148, Dec. 10, 1984; 52 FR 47876, Dec. 16, 1987; 54 FR 14612, Apr. 11, 1989; 58 FR 16067, Mar. 24, 1993; 61 FR 54901, Oct. 22, 1996; 63 FR 23501, Apr. 29, 1998]

APPENDIX II TO PART 86—TEMPERATURE SCHEDULES

(a) Ambient temperature cycle for the diurnal emission portion of the evaporative emission test (see § 86.133).

TABLE I—TEMPERATURE VERSUS TIME SEQUENCE

Use linear interpolation between hourly temperatures

Time (min)	Temp. (°F)	Time (min)	Temp. (°F)	Time (min)	Temp. (°F)
0	72.0	60	72.5	120	75.5
180	80.3	240	85.2	300	89.4
360	93.1	420	95.1	480	95.8
540	96.0	600	95.5	660	94.1
720	91.7	780	88.6	840	85.5
900	82.8	960	80.9	1020	79.0
1080	77.2	1140	75.8	1200	74.7
1260	73.9	1320	73.3	1380	72.6
1440	72.0	1500	72.5	1560	75.5
1620	80.3	1680	85.2	1740	89.4
1800	93.1	1860	95.1	1920	95.8
1980	96.0	2040	95.5	2100	94.1
2160	91.7	2220	88.6	2280	85.5
2340	82.8	2400	80.9	2460	79.0
2520	77.2	2580	75.8	2640	74.7
2700	73.9	2760	73.3	2820	72.6
2880	72.0	2940	72.5	3000	75.5
3060	80.3	3120	85.2	3180	89.4
3240	93.1	3300	95.1	3360	95.8
3420	96.0	3480	95.5	3540	94.1
3600	91.7	3660	88.6	3720	85.5
3780	82.8	3840	80.9	3900	79.0
3960	77.2	4020	75.8	4080	74.7
4140	73.9	4200	73.3	4260	72.6

TABLE I—TEMPERATURE VERSUS TIME SEQUENCE—Continued

Use linear interpolation between hourly temperatures					
Time (min)	Temp. (°F)	Time (min)	Temp. (°F)	Time (min)	Temp. (°F)
4320	72.9				

[58 FR 16070, Mar. 24, 1993]

APPENDIX III TO PART 86—CONSTANT VOLUME SAMPLER FLOW CALIBRATION

The following calibration procedure outlines the equipment, the test setup configuration, and the various parameters which must be measured to establish the flow rate of the constant volume sampler pump. All the parameters related to the pump are simultaneously measured with the parameters related to a flowmeter which is connected in series with the pump. The calculated flow rate (ft^3/rev@ pump inlet absolute pressure and temperature) can then be plotted versus a correlation function which is the value of a specific combination of pump parameters. The linear equation which relates the pump flow and the correlation function is then determined. In the event that a CVS has a multiple speed drive, a calibration for each range should be performed.

This calibration procedure is based on the measurement of the absolute values of the pump and flowmeter parameters that relate the flow rate at each point. Three conditions must be maintained to assure the accuracy and integrity of the calibration curve. First, the pump pressures should be measured at taps on the pump rather than at the external piping on the pump inlet and outlet. Pressure taps that are mounted at the top and bottom center of the pump drive headplate are exposed to the actual pump cavity pressures, and therefore reflect the absolute pressure differentials. Secondly, temperature stability must be maintained during the calibration. The laminar flowmeter is sensitive to inlet temperature oscillations which cause the data points to be scattered. Gradual changes (± 2 °F) in temperature are acceptable as long as they occur over a period of several minutes. Finally, all connections between the flowmeter and the CVS pump must be absolutely void of any leakage.

During a CVS emissions test the measurement of these same pump parameters enables the user to calculate the flow rate from the calibration equation.

After the calibration curve has been obtained, a verification test of the entire system can be performed by injecting a known mass of gas into the system and comparing the mass indicated by the system to the true mass injected. An indicated error does not necessarily mean that the calibration is wrong, since other factors can influence the accuracy of the system.

Equipment:

The following list of equipment will be needed to perform this calibration procedure. Figure 1 illustrates a typical equipment arrangement used for calibration. All of the equipment involved should conform to the range and accuracy as specified in Figure 1.

Equipment List:

1. LFE—Laminar Flowmeter
2. Micromanometer
3. Thermometer
4. Timer
5. U-Tube Manometers
6. Temperature Indicator with type J Thermocouples
7. A variable flow restrictor with appropriate piping to connect the CVS pump and LFE.

After the system has been connected as shown in Figure 1, set the variable restrictor in the wide open position and run the CVS pump for twenty minutes. Record the calibration data.

CALIBRATION DATA MEASUREMENTS

Parameter	Symbol	Units	Tolerance
Barometric pressure (corrected)	P_B	''Hg	±.01 ''Hg.
Ambient temperature	T_A	°F	±.5 °F.
Air Temperature into LFE	ETI	°F	±.1 °F.
Pressure depression upstream of LFE	EPI	''H20	±.1''H20.
Pressure drop across the LFE matrix	EDP	''H20	±.005''H20.
Air temperature at CVS pump inlet	PTI	°F	±.5 °F.
Pressure depression at CVS pump inlet	PPI	''Fluid	±.05''Fluid.
Specific gravity of manometer fluid	Sp. Gr.		
Pressure head at CVS pump outlet	PPO	''Fluid	±.05''Fluid.
Air temperature at CVS pump outlet (optional)	PTO	°F	±.5 °F.
Pump revolutions during test period	N	Revs	None.

CALIBRATION DATA MEASUREMENTS—Continued

Parameter	Symbol	Units	Tolerance
Elapsed time for test period	t	Seconds	±.05 Seconds.

NOTE: The fluid level in the manometer tube should stabilize before the reading is made and the elapsed time for revolution counting should be greater than 120 seconds.

Reset the restrictor valve to a more restricted condition in an increment of pump inlet depression (about 4″ H_2O) that will yield a minimum of six data points for the total calibration.

Allow the system to stabilize for 3 minutes and repeat the data acquisition.

Data Analysis:

The data recorded during the calibration are to be used in the following calculations.

1. The air flow rate at each test point is calculated in standard cubic feet per minute (Qs) from the flowmeter data using the manufacturer's prescribed method.

2. The air flow rate is then converted to pump flow, Vo, in cubic feet per revolution at absolute pump inlet temperature and pressure.

$$V_o = Qs/n \times T_p/530 \times 29.92/P_p$$

where:

Qs=Meter air flow rate in standard cubic feet per minute (flowmeter standard conditions are 70 °F, 29.92 ''Hg).

n=Pump speed in revolutions per minute.

P_p=Absolute pump inlet pressure, in (''Hg).

$P_p = P_B - PPI$ (SP.GR./13.57), T_p = PTI + 460.

3. The correlation function at each test point is then calculated from the calibration data, as follows:

$$X_o = \frac{1}{n}\sqrt{\frac{\Delta P_v}{P_e}}$$

ΔP_p = The pressure differential from pump inlet to pump outlet in (''Hg).

$$\Delta P_p = P_e - P_p$$

P_e=Absolute pump outlet pressure, in (''Hg).

$$P_p = P_B + PPO \text{ (Sp. Gr./13.57)}$$

See §86.177–22 for other definitions.

4. A linear least squares fit is performed to generate the calibration equations which have the forms

$$V_o = D_o - M(X_o)$$
$$n = A - B(P_p)$$

Do, M, A, and B are the slope-intercept constants describing the lines.

A CVS system that has multiple speeds should be calibrated on each speed used. The calibration curves generated for the ranges will be approximately parallel and the intercept values, D_o, will increase as the pump flow range decreases.

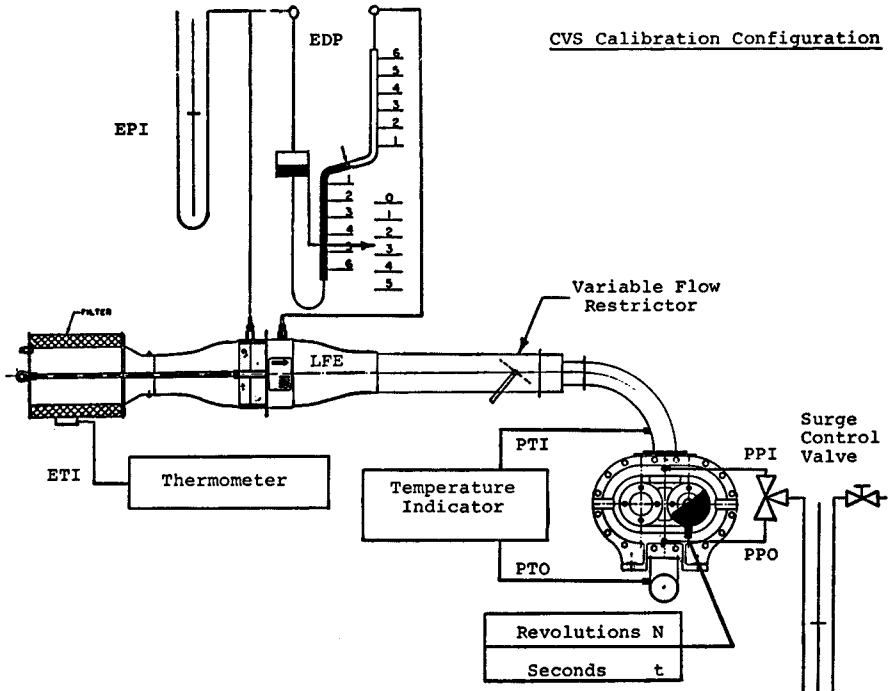

Unit		Range	Accuracy
	ETI	0-100 °F	± .1 °F
LFE	EPI	0-10 "H_2O	± .1 "H_2O
	EDP	0-10 "H_2O	± .005 "H_2O
	PTI	0-250 °F	± .5 °F
	PPI	0-36 "Fluid	± .05 "Fluid
	PPO	0-36 "Fluid	± .05 "Fluid
Pump	PTO	0-250 °F	± .5 °F
	N	0-100,000	± 0
	t	0-10,000 secs.	± .05 secs.

Note: Fluid used in 36 inch manometer should extend range to at least 0-60 "H_2O. Separate manometers for PPI and PPO may be used during calibration.

Figure I—CVS Calibration Configuration

If the calibration has been performed carefully, the calculated V_o values from the equation will be within ±.50% of the measured value of V_o. Values of M will vary from one pump to another, but values of D_o for pumps of the same make, model, and range should agree within ±3 percent of each other. Particulate influx from use will cause the pump slip to decrease as reflected by lower values for M. Calibrations should be performed at 0, 30, 100, 200, 400, etc. hours of pump operation to assure the stability of the pump slip rate. Analysis of mass injection data will also reflect pump slip stability.

CVS System Verification:

The following technique can be used to verify that the CVS and analytical instruments can accurately measure a mass of gas that has been injected into the system.

1. Obtain a small cylinder that has been charged with pure propane or carbon monoxide gas (caution—carbon monoxide is poisonous!). Critical flow orifice devices can also be used for constant flow metering.

2. Determine a reference cylinder weight to the nearest 0.01 gram.

3. Operate the CVS in the normal manner and release a quantity of pure propane or

carbon monoxide into the system during the sampling period.

4. The calculations of §86.177–22 are performed in a normal way except, in the case of propane, the density of propane (17.30 grams/cu./ft./carbon atom) is used in place of the density of exhaust hydrocarbons. In the case of carbon monoxide, the density of 32.97 grams/cu. ft. is used.

5. The gravimetric mass is subtracted from the CVS measured mass and then divided by the gravimetric mass to determine the percent accuracy of the system.

6. The cause for any discrepancy greater than ±2 percent should be found and corrected. The following list of parametric errors may assist the operator in locating the cause of large errors.

Positive Error (Indication is higher than true value):

1. Calculated V_o is greater than actual V_o.

a. Original calibration in error.

2. Pump inlet temperature recorder is reading low. A 6 °F. discrepancy will give a 1 percent error.

3. Pump inlet pressure indicator is reading high. A 3.5 in. H_2O high reading will give 1 percent error.

4. Background concentration reading is too low. Check analyzer zero. Check leakage at floor inlet.

5. Analyzer is reading high. Check span.

6. Barometer reading is in error (too high). Barometric pressure reading should be gravity and temperature corrected.

7. Revolution counter is reading high (Check pump speed and counters.)

8. Mixture is stratified causing the sample to be higher than the average concentration in the mixture. Negative Error (Indication is lower than true value):

1. Calculated V_o is less than actual V_o.

a. Original calibration in error.

b. Pump clearances decreased due to influx of some surface adherent material. Recalibration may be needed.

2. Pump inlet temperature recorder is reading high.

3. Pump inlet pressure indicator is reading low.

4. Background concentration reading is too high.

5. Analyzer is reading low.

6. Barometer reading is in error (too low).

7. Revolution counter is reading low.

8. There is a leak into the sampling system. Pressure check the lines and fittings on the intake side of sample transfer pumps on both the CVS and analyzer console.

[42 FR 33000, June 28, 1977]

APPENDIX IV TO PART 86—DURABILITY DRIVING SCHEDULES

(a) Durability Driving Schedule for Light-Duty Vehicles and Light-Duty Trucks.

The schedule consists basically of 11 laps of a 3.7 mile course. The basic vehicle speed for each lap is listed below:

Lap	Speed miles per hour
1	40
2	30
3	40
4	40
5	35
6	30
7	35
8	45
9	35
10	55
11	70

During each of the first nine laps there are 4 stops with 15 second idle. Normal accelerations and decelerations are used. In addition, there are 5 light decelerations each lap from the base speed to 20 m.p.h. followed by light accelerations to the base speed.

The 10th lap is run at a constant speed of 55 m.p.h.

The 11th lap is begun with a wide open throttle acceleration from stop to 70 m.p.h. A normal deceleration to idle followed by a second wide open throttle acceleration occurs at the midpoint of the lap.

(b) Durability Driving Schedule for Motorcycles. The Durability Driving Schedule for Class III Motorcycles may be used for Light-Duty Vehicles and Light-Duty Trucks.

The schedule consists basically of 11 laps of a 6.0 km (3.7 mi) course. The basic vehicle speed for each lap is listed below:

SPEED (KILOMETERS PER HOUR)

Lap	Class I	Class II	Class III
1	65	65	65
2	45	45	65
3	65	65	55
4	65	65	45
5	55	55	55
6	45	45	55
7	55	55	70
8	70	70	55
9	55	55	46
10	70	90	90
11	70	90	110

During each of the first nine laps there are 4 stops with 15 second idle. Normal accelerations and decelerations are used. In addition, there are 5 light declerations each lap from the base speed to 30 km/h followed by light accelerations to the base speed.

The 10th lap is run at a constant speed.

The 11th lap is begun with a wide open throttle acceleration from stop. A normal deceleration to idle followed by a second wide open throttle acceleration occurs at the midpoint of the lap.

This schedule may be modified with the advance approval of the Administrator if it results in unsafe operation of the vehicle.

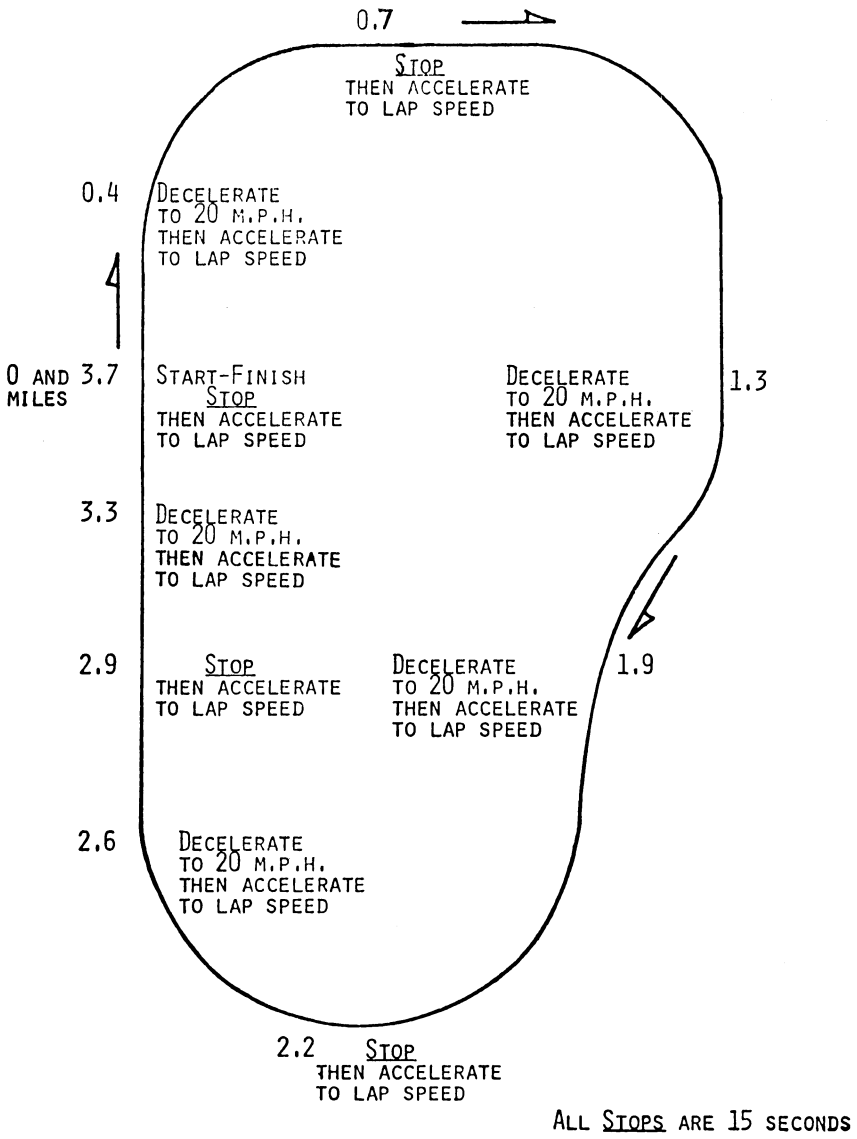

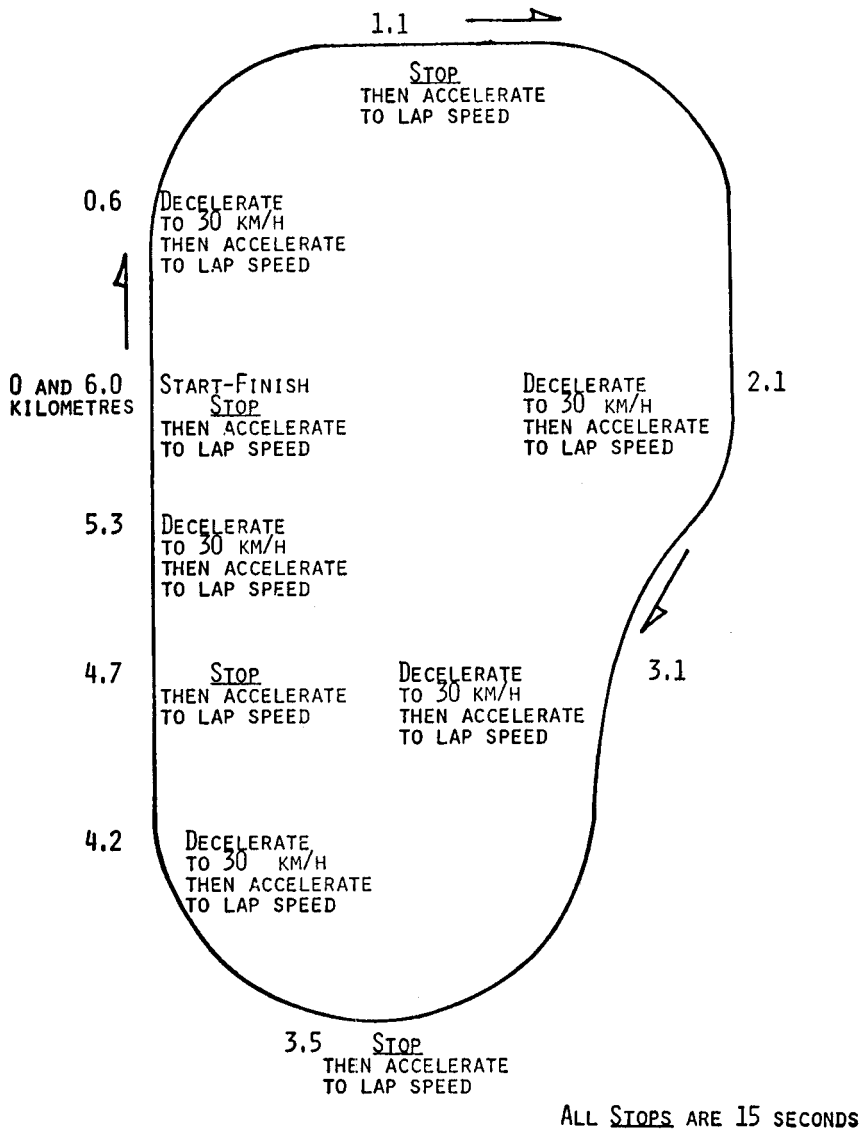

[42 FR 33002, June 28, 1977]

APPENDIX V TO PART 86 [RESERVED]

APPENDIX VI TO PART 86—VEHICLE AND ENGINE COMPONENTS

(a) Light-Duty Vehicles, Light-Duty Trucks, Motorcycles, and Gasoline-Fueled Heavy-Duty Engines.

I. Basic Mechanical Components-Engine.

(1) Intake and exhaust valves.

(2) Drive belts.

(3) Manifold and cylinder head bolts.

(4) Engine oil and filter.

(5) Engine coolant.

(6) Cooling system hoses and connections.

(7) Vacuum fittings, hoses, and connections.

(8) Oil injection metering system.

II. Fuel System.
(1) Fuel specification-octane rating, lead content.
(2) Carburetor-idle RPM, mixture ratio.
(3) Choke mechanism.
(4) Fuel system filter and fuel system lines and connections.
(5) Choke plate and linkage.
III. Ignition Components.
(1) Ignition timing and advance systems.
(2) Distributor breaker points and condenser.
(3) Spark plugs.
(4) Ignition wiring.
(5) Operating parts of distributor.
IV. Crankcase Ventilation System.
(1) PCV valve.
(2) Ventilation hoses.
(3) Oil filter breather cap.
(4) Manifold inlet (carburetor spacer, etc.).
V. External Exhaust Emission Control System.
(1) Secondary air injection system hoses.
(2) Air system manifolds.
(3) Control valves and air pump.
(4) Manifold reactors.
(5) Catalytic converters.
(6) Exhaust recirculation.
(7) Water injection.
VI. Evaporative Emission Control System.
(1) Engine compartment hose connections.
(2) Carbon storage media.
(3) Fuel tank pressure-relief valve operation.
(4) Fuel vapor control valves.
VII. Air Inlet Components.
(1) Carburetor air cleaner filter.
(2) Hot air control valve.
(b) Diesel Light-Duty Vehicles, Diesel Light-Duty Trucks, and Diesel Heavy-Duty Engines.
I. Engine Mechanical Components.
(1) Valve train.
(2) Cooling system.
a. Coolant.
b. Thermostat.
c. Filter.
(3) Lubrication.
a. Oil filter.
b. Lubricant.
II. Fuel System.
(1) Fuel type.
(2) Fuel pump.
(3) Fuel filters.
(4) Injectors.
(5) Governor.
III. Air Inlet Components.
(1) Air cleaner.
(2) Inlet ducting.
IV. External Exhaust Emission Control System.
(1) Rack limiting devices (aneroid, throttle delay, etc.).
(2) Manifold reactors.
(3) Catalytic converters.
(4) Exhaust recirculation.
(5) Water injection.

[42 FR 33004, June 28, 1977]

APPENDIXES VII–IX TO PART 86 [RESERVED]

APPENDIX X TO PART 86—SAMPLING PLANS FOR SELECTIVE ENFORCEMENT AUDITING OF HEAVY-DUTY ENGINES AND LIGHT-DUTY TRUCKS

TABLE 1—SAMPLING PLAN CODE LETTER

Annual sales	Code letter
50–99	A.
100–299	B.
300–499	C.
500 or greater	D.

TABLE 2—SAMPLING PLAN FOR CODE LETTER "A"

[Sample inspection criteria]

Stage	Pass No.	Fail No.	Stage	Pass No.	Fail No.
1	(1)	(2)	16	6	11
2	(1)	(2)	17	7	12
3	(1)	(2)	18	7	12
4	0	(2)	19	8	13
5	0	(2)	20	8	13
6	1	6	21	9	14
7	1	7	22	10	14
8	2	7	23	10	15
9	2	8	24	11	15
10	3	8	25	11	16
11	3	8	26	12	16
12	4	9	27	12	17
13	5	10	28	13	17
14	5	10	29	14	17
15	6	11	30	16	17

[1] Test sample passing not permitted at this stage.
[2] Test sample failure not permitted at this stage.

TABLE 3—SAMPLING PLAN FOR CODE LETTER "B"

[Sample Inspection Criteria]

Stage	Pass No.	Fail No.
1	(1)	(2)
2	(1)	(2)
3	(1)	(2)
4	(1)	(2)
5	0	(2)
6	1	6
7	1	7
8	2	7
9	2	8
10	3	8
11	3	9
12	4	9
13	4	10
14	5	10
15	5	11
16	6	12
17	6	12
18	7	13
19	8	13

TABLE 3—SAMPLING PLAN FOR CODE LETTER "B"—Continued

[Sample Inspection Criteria]

Stage	Pass No.	Fail No.
20	8	14
21	9	14
22	9	15
23	10	15
24	10	16
25	11	16
26	11	17
27	12	17
28	12	18
29	13	18
30	13	19
31	14	19
32	14	20
33	15	20
34	16	21
35	16	21
36	17	22
37	17	22
38	18	22
39	18	22
40	21	22

[1] Test sample passing not permitted at this stage.
[2] Test sample failure not permitted at this stage.

TABLE 4—SAMPLING PLAN FOR CODE LETTER "C"

[Sample Inspection Criteria]

Stage	Pass No.	Fail No.
1	[1]	[2]
2	[1]	[2]
3	[1]	[2]
4	[1]	[2]
5	0	[2]
6	0	6
7	1	7
8	2	7
9	2	8
10	3	9
11	3	9
12	4	10
13	4	10
14	5	11
15	5	11
16	6	12
17	6	12
18	7	13
19	7	13
20	8	14
21	8	14
22	9	15
23	10	15
24	10	16
25	11	16
26	11	17
27	12	17
28	12	18
29	13	18
30	13	19
31	14	19
32	14	20
33	15	20
34	15	21
35	16	21
36	16	22
37	17	22
38	18	23

TABLE 4—SAMPLING PLAN FOR CODE LETTER "C"—Continued

[Sample Inspection Criteria]

Stage	Pass No.	Fail No.
39	18	23
40	19	24
41	19	24
42	20	25
43	20	25
44	21	26
45	21	27
46	22	27
47	22	27
48	23	27
49	23	27
50	26	27

[1] Test sample passing not permitted at this stage.
[2] Test sample failure not permitted at this stage.

TABLE 5—SAMPLING PLAN FOR CODE LETTER "D"

[Sample Inspection Criteria]

Stage	Pass No.	Fail No.
1	([1])	([2])
2	([1])	([2])
3	([1])	([2])
4	([1])	([2])
5	0	([2])
6	0	6
7	1	7
8	2	8
9	2	8
10	3	9
11	3	9
12	4	10
13	4	10
14	5	11
15	5	11
16	6	12
17	6	12
18	7	13
19	7	13
20	8	14
21	8	14
22	9	15
23	9	15
24	10	16
25	11	16
26	11	17
27	12	17
28	12	18
29	13	19
30	13	19
31	14	20
32	14	20
33	15	21
34	15	21
35	16	22
36	16	22
37	17	23
38	17	23
39	18	24
40	18	24
41	19	25
42	19	26
43	20	26
44	21	27
45	21	27
46	22	28
47	22	28

TABLE 5—SAMPLING PLAN FOR CODE LETTER "D"—Continued

[Sample Inspection Criteria]

Stage	Pass No.	Fail No.
48	23	29
49	23	29
50	24	30
51	24	30
52	25	31
53	25	31
54	26	32
55	26	32
56	27	33
57	27	33
58	28	33
59	28	33
60	32	33

[1] Test sample passing not permitted at this stage.
[2] Test sample failure not permitted at this stage.

[48 FR 1414, Jan. 12, 1983, as amended at 48 FR 52209, Nov. 16, 1983]

APPENDIX XI TO PART 86—SAMPLING PLANS FOR SELECTIVE ENFORCEMENT AUDITING OF LIGHT-DUTY VEHICLES

40% AQL

TABLE 1—SAMPLING PLAN CODE LETTER

Annual sales of configuration	Code letter
50–99	A
100–299	B
300–499	C
500 or greater	D

TABLE 2—SAMPLING PLAN FOR CODE LETTER "A" 40% AQL

[Sample inspection criteria]

Stage	Pass No.	Fail No.
1	(1)	(2)
2	(1)	(2)
3	(1)	(2)
4	0	(2)
5	0	(2)
6	1	6
7	1	7
8	2	7
9	2	8
10	3	8
11	3	9
12	4	9
13	5	10
14	5	10
15	6	11
16	6	11
17	7	12
18	7	12
19	8	13
20	8	13
21	9	14
22	10	14
23	10	15
24	11	15
25	11	16

TABLE 2—SAMPLING PLAN FOR CODE LETTER "A" 40% AQL—Continued

[Sample inspection criteria]

Stage	Pass No.	Fail No.
26	12	16
27	12	17
28	13	17
29	14	17
30	16	17

[1] Test sample passing not permitted at this stage.
[2] Test sample failure not permitted at this stage.

TABLE 3—SAMPLING PLAN FOR CODE LETTER "B" 40% AQL

[Sample inspection criteria]

Stage	Pass No.	Fail No.
1	(1)	(2)
2	(1)	(2)
3	(1)	(2)
4	(1)	(2)
5	0	(2)
6	1	6
7	1	7
8	2	7
9	2	8
10	3	8
11	3	9
12	4	9
13	4	10
14	5	10
15	5	11
16	6	12
17	6	12
18	7	13
19	8	13
20	8	14
21	9	14
22	9	15
23	10	15
24	10	16
25	11	16
26	11	17
27	12	17
28	12	18
29	13	18
30	13	19
31	14	19
32	14	20
33	15	20
34	16	21
35	16	21
36	17	22
37	17	22
38	18	22
39	18	22
40	21	22

[1] Test sample passing not permitted at this stage.
[2] Test sample failure not permitted at this stage.

TABLE 4—SAMPLING PLAN FOR CODE LETTER "C" 40% AQL

[Sample inspection criteria]

Stage	Pass No.	Fail No.
1	(1)	(2)
2	(1)	(2)
3	(1)	(2)
4	(1)	(2)

TABLE 4—SAMPLING PLAN FOR CODE LETTER "C" 40% AQL—Continued

[Sample inspection criteria]

Stage	Pass No.	Fail No.
5	0	(2)
6	0	6
7	1	7
8	2	7
9	2	8
10	3	9
11	3	9
12	4	10
13	4	10
14	5	11
15	5	11
16	6	12
17	6	12
18	7	13
19	7	13
20	8	14
21	8	14
22	9	15
23	10	15
24	10	16
25	11	16
26	11	17
27	12	17
28	12	18
29	13	18
30	13	19
31	14	19
32	14	20
33	15	20
34	15	21
35	16	21
36	16	22
37	17	22
38	18	23
39	18	23
40	19	24
41	19	24
42	20	25
43	20	25
44	21	26
45	21	27
46	22	27
47	22	27
48	23	27
49	23	27
50	26	27

[1] Test sample passing not permitted at this stage.
[2] Test sample failure not permitted at this stage.

TABLE 5—SAMPLING PLAN FOR CODE LETTER "D" 40% AQL

[Sample inspection criteria]

Stage	Pass No.	Fail No.
1	(1)	(2)
2	(1)	(2)
3	(1)	(2)
4	(1)	(2)
5	0	(2)
6	0	6
7	1	7
8	2	8
9	2	8
10	3	9
11	3	9
12	4	10
13	4	10

TABLE 5—SAMPLING PLAN FOR CODE LETTER "D" 40% AQL—Continued

[Sample inspection criteria]

Stage	Pass No.	Fail No.
14	5	11
15	5	11
16	6	12
17	6	12
18	7	13
19	7	13
20	8	14
21	8	14
22	9	15
23	9	15
24	10	16
25	11	16
26	11	17
27	12	17
28	12	18
29	13	19
30	13	19
31	14	20
32	14	20
33	15	21
34	15	21
35	16	22
36	16	22
37	17	23
38	17	23
39	18	24
40	18	24
41	19	25
42	19	26
43	20	26
44	21	27
45	21	27
46	22	28
47	22	28
48	23	29
49	23	29
50	24	30
51	24	30
52	25	31
53	25	31
54	26	32
55	26	32
56	27	33
57	27	33
58	28	33
59	28	33
60	32	33

[1] Test sample passing not permitted at this stage.
[2] Test sample failure not permitted at this stage.

[49 FR 48485, Dec. 12, 1984]

APPENDIX XII TO PART 86—TABLES FOR PRODUCTION COMPLIANCE AUDITING OF HEAVY-DUTY ENGINES AND HEAVY-DUTY VEHICLES, INCLUDING LIGHT-DUTY TRUCKS

TABLE 1—COMPLIANCE LEVEL DETERMINATION USING THE PRIMARY PCA SAMPLING PLAN

	Compliance level [2]
PCA test sample size.[1]	
24	15

TABLE 1—COMPLIANCE LEVEL DETERMINATION USING THE PRIMARY PCA SAMPLING PLAN—Continued

	Compliance level [2]
25	15
26	16
27	17
28	17
29	18
30	18
31	19
32	20
33	20
34	21
35	21
36	22
37	23
38	23
39	24
40	24
41	25
42	26
43	26
44	27
45	27
46	28
47	29
48	29
49	30
50	30
51	31
52	32
53	32
54	33
55	33
56	34
57	35
58	35
59	36
60	36

[1] Including the number of SEA tests if applicable.
[2] Is the test result of the sequence number: (The lowest test result is sequence No. 1).

TABLE 2—VALUES OF K FOR THE REDUCED FIXED PCA SAMPLING PLAN

	Value of K
Sample size:	
3	1.602
4	1.114
5	0.895
6	0.764
7	0.674
8	0.608
9	0.555
10	0.513
11	0.478
12	0.448
13	0.422
14	0.399
15	0.379
16	0.360
17	0.343
18	0.328
19	0.314
20	0.301
21	0.289
22	0.277
23	0.266

TABLE 3—VALUES OF K FOR THE REDUCED SEQUENTIAL PCA SAMPLING PLAN

	Value of K
Sample size:	
4	1.671
8	0.912
12	0.672
16	0.540
20	0.451

[50 FR 35401, Aug. 30, 1985]

APPENDIX XIII TO PART 86—STATE REQUIREMENTS INCORPORATED BY REFERENCE IN PART 86 OF THE CODE OF FEDERAL REGULATIONS

The following is an informational list of the California regulatory requirements applicable to the National Low Emission Vehicle program (October, 1996) incorporated by reference in part 86 of the Code of Federal Regulations (see §86.1).

CALIFORNIA STATE REGULATIONS

(a) State of California; Air Resources Board: California Assembly-Line Test Procedures for 1983 Through 1997 Model-Year Passenger Cars, Light-Duty Trucks and Medium-Duty Vehicles, adopted November 24, 1981, amended June 24, 1996.

(b) State of California; Air Resources Board: California Assembly-Line Test Procedures for 1998 and Subsequent Model-Year Passenger Cars, Light-Duty Trucks and Medium-Duty Vehicles, adopted June 24, 1996.

(c) California Code of Regulations, Title 13, Division 3, Sections 2108, 2109, 2110.

(d) State of California; Air Resources Board: California Exhaust Emission Standards and Test Procedures for 1988 and Subsequent Model Passenger Cars, Light-Duty Trucks, and Medium-Duty Vehicles, adopted May 20, 1987, amended June 24, 1996, Section 9.a.

(e) State of California; Air Resources Board: California Non-Methane Organic Gas Test Procedures, adopted July 12, 1991, amended June 24, 1996.

(f) State of California; Air Resources Board: Regulations Regarding Malfunction and Diagnostic System Requirements—1994 and Later Passenger Cars, Light-Duty Trucks, and Medium-Duty Vehicles and Engines (OBD II), California Mail Out #95–34, September 26, 1995, excluding paragraphs (d), (m)(4), and (m)(5).

(g) State of California; Air Resources Board: California Motor Vehicle Emission Control Label Specifications, adopted March 1, 1978, amended June 24, 1996, excluding paragraphs 2(b), 3.5, and 10.

[62 FR 31264, June 6, 1997]

APPENDIX XIV TO PART 86—DETERMINATION OF ACCEPTABLE DURABILITY TEST SCHEDULE FOR LIGHT-DUTY VEHICLES AND LIGHT LIGHT-DUTY TRUCKS CERTIFYING TO THE PROVISIONS OF PART 86, SUBPART R

A manufacturer may determine mileage test intervals for durability-data vehicles subject to the conditions specified in §86.1726. The following procedure shall be used to determine if the schedule is acceptable to the Administrator:

1. Select exhaust system mileage test points and maintenance mileage test points for proposed (prop) schedule.

2. Calculate the sums of the squares corrected to the mean of the system mileages at the proposed test points:

$$A_{prop} = [\sum(X_p)^2 - ((\sum X_p)^2 / N_p))_{prop}$$

Where:

X_p = Individual mileages at which the vehicle will be tested.

N_p = Total number of tests (including before and after maintenance tests).

(Subscript ''p'' refers to proposed test schedule).

3. Determine exhaust system mileage test points and maintenance mileage test points based on testing at five thousand mile intervals from 5,000 miles through the final testing point and maintenance mileage test points selected for the proposed schedule in step 1 of this appendix. This schedule will be designated as the standard (std) test schedule.

4. Calculate the sums of squares corrected to the mean of the standard schedule:

$$B_{std} = [\sum(X_s)^2 - ((\sum X_s)^2 / N_s))_{std}$$

Where:

X_s = Individual mileages at which the vehicle will be tested.

N_s = Total number of tests (including before and after maintenance).

(Subscript ''s'' refers to standard test schedule).

5. Refer to table I and determine t_p at $(N_p - 2)_{prop}$ degrees of freedom and t_s at $(N_s - 2)_{std}$.

6. If $(A_{prop})^{1/2} \geq t_p / t_s \times (B_{std})^{1/2}$ the proposed plan is acceptable.

TABLE I TO APPENDIX XIV

Degrees of freedom (N–2)	t
1	6.314
2	2.920
3	2.353
4	2.132
5	2.015
6	1.943
7	1.895
8	1.860
9	1.833
10	1.812
11	1.796
12	1.782
13	1.771
14	1.761
15	1.753
16	1.746
17	1.740
18	1.734
19	1.729
20	1.725
21	1.721
22	1.717
23	1.714
24	1.711
25	1.708

[62 FR 31264, June 6, 1997]

APPENDIX XV TO PART 86—PROCEDURE FOR DETERMINING AN ACCEPTABLE EXHAUST REGENERATION DURABILITY-DATA TEST SCHEDULE FOR DIESEL CYCLE VEHICLES EQUIPPED WITH PERIODICALLY REGENERATING TRAP OXIDIZER SYSTEMS CERTIFYING TO THE PROVISIONS OF PART 86, SUBPART R

1. Select exhaust system mileage test points for proposed (prop) schedule.

2. Calculate the sums of the squares corrected to the mean of the system mileages at the proposed test points:

$$A_{prop} = [\sum(X_p)^2 - ((\sum X_p)^2 / N_p))_{prop}$$

Where:

X_p = Individual mileages at which the vehicle will be tested.

N_p = Total number of tests (including before and after maintenance tests).

(Subscript ''p'' refers to proposed test schedule).

3. The exhaust system mileage tests points at 5,000, 25,000, 50,000, 75,000, and 100,000 miles will be designated as the standard (std) test schedule.

4. Calculate the sums of square corrected to the mean of the standard tests schedule:

$$B_{std} = [\sum(X_s)^2 - ((\sum X_s)^2 / N_s))_{std}$$

Where:

X_s = Individual mileages at which the vehicle will be tested.

N_s = Total number of regeneration emission tests.

(Subscript ''s'' refers to standard test schedule)

5. Refer to table I and determine t_p at $(N_p - 2)_{prop}$ degrees of freedom and t_s at $(N_s - 2)_{std}$ degrees of freedom.

6. If $(A_{prop})^{1/2} \geq t_p / t_s \times (B_{std})^{1/2}$ the proposed plan is acceptable.

TABLE I TO APPENDIX XV

Degrees of freedom (N–2)	t
1	6.314
2	2.920
3	2.353
4	2.132
5	2.015
6	1.943
7	1.895
8	1.860
9	1.833
10	1.812
11	1.796
12	1.782
13	1.771
14	1.761
15	1.753

[62 FR 31264, June 6, 1997]

APPENDIX XVI TO PART 86—POLLUTANT MASS EMISSIONS CALCULATION PROCEDURE FOR GASEOUS-FUELED VEHICLES AND FOR VEHICLES EQUIPPED WITH PERIODICALLY REGENERATING TRAP OXIDIZER SYSTEMS CERTIFYING TO THE PROVISIONS OF PART 86, SUBPART R

(a) Gaseous-Fueled Vehicle Pollutant Mass Emission Calculation Procedure.

(1) For all TLEVs, LEVs, and ULEVs, the calculation procedures specified in Chapter 5 of the California Regulatory Requirements Applicable to the National Low Emission Vehicle Program (October, 1996) shall apply. These procedures are incorporated by reference (see §86.1).

(b) Pollutant Mass Emissions Calculation Procedure for Vehicles Equipped with Periodically Regenerating Trap Oxidizer Systems.

(1) Exhaust Emissions. (i) The provisions of §86.1777 apply to vehicles equipped with periodically regenerating trap oxidizer systems, except that the following shall apply instead of the requirements in §86.144–94(a):

(ii) The final reported test results shall be computed by the use of the following formula:

(iii) For light-duty vehicles and light-duty trucks:

Y_{wm} = 0.43 ((Yct + Ys) / (Dct + Ds)) + 0.57 ((Yht + Ys) / (Dht + Ds)).

(iv) For purposes of adjusting emissions for regeneration:

Re = ((Yr1 − Yct) + (Yr2 − Ys) + (Yr3 − Yht)) / (Dct + Ds + Dht).

Yr = Ywm + Re.

Where:

Ywm = Weighted mass emissions of each pollutant, i.e., HC, CO, NO_X or CO , in grams per vehicle mile.

Yct = Mass emissions as calculated from the ''transient'' phase of the cold start test, in grams per test phase.

Yht = Mass emissions as calculated from the ''transient'' phase of the hot start test in grams per test phase.

Ys = Mass emissions as calculated from the ''stabilized'' phase of the cold start test, in grams per test phase.

Dct = The measured driving distance from the ''transient'' phase of the cold start test, in miles.

Dht = The measured distance from the ''transient'' phase of the hot start test, in miles.

Ds = The measured driving distance from the ''stabilized'' phase of the cold start test, in miles.

Yr = Regeneration emission test.

Re = Mass emissions of each pollutant attributable to regeneration in grams per mile.

Yr1 = Mass emissions, during a regeneration emission test, as calculated from the ''transient'' phase of the cold start test, in grams per test phase.

Yr2 = Mass emissions, during a regeneration emission test, as calculated from the ''stabilized'' phase of the cold start test, in grams per test phase.

Yr3 = Mass emissions, during a regeneration emission test, as calculated from the ''transient'' phase of the hot start test in grams per test phase.

(2) Particulate Emissions. (i) The provisions of §86.1778 apply to vehicles equipped with periodically regenerating trap oxidizer systems, except that the following shall apply instead of the requirements §86.145–82(a):

(ii) The final reported test results for the mass particulate (Mp) in grams/mile shall be computed as follows.

(iii) For purposes of adjusting emissions for regeneration:

Mp = 0.43(Mp1 + Mp2) / (Dct + Ds) + 0.57 (Mp3 + Mp2) / (Dht + Ds)

Re = ((Mpr1 − Mp1) + (Mpr2 − Mp2) + (Mpr3 − Mp3) / (Dct + Ds + Dht)

Mpr = Mp + Re

Where:

(1) Mp1 = Mass of particulate determined from the ''transient'' phase of the cold start test, in grams per test phase. (See §86.110–94(d)(1) for determination.)

(2) Mp2 = Mass of particulate determined from the ''stabilized'' phase of the cold start test, in grams per test phase. (See §86.110–94(d)(1) for determination.)

(3) Mp3 = Mass of particulate determined from the ''transient'' phase of the hot start test, in grams per test phase. (See §86.110–94(d)(1) for determination.)

(4) Dct = The measured driving distance from the ''transient'' phase of the cold start test, in miles.

(5) Ds = The measured driving distance from the ''stabilized'' phase of the cold start test, in miles.

(6) Dht = The measured driving distance from the ''transient'' phase of the hot start test, in miles.

(7) Mpr = Regeneration emission test

(8) Re = Mass of particulate attributable to regeneration in grams/mile.

(9) Mpr1 = Mass of particulate determined, during a regeneration emission test, from the ''transient'' phase of the cold start test in grams per test phase. (See §86.110–94(d)(1) for determination.)

(10) Mpr2 = Mass of particulate determined, during a regeneration emission test, from ''stabilized'' phase of the cold start test, in grams per test phase. (See §86.110–94(d)(1) for determination.)

(11) Mpr3 = Mass of particulate determined, during a regeneration emission test, from the ''transient'' phase of the hot start test, in grams per test phase. (See §86.110–94(d)(1) for determination.)

(c) Fuel Economy Calculations for Gaseous Fuels Based on the Cold Start CVS–1975 Federal Test Procedure.

(1) Assume the fuel meets HD–5 specifications (95% C_3H_8, 5% nC_4H_{10}, by volume).

(i) Physical constants of Propane and Normal Butane:

Component	Mol. Wt.	Sp. Gr.	Liquid density (lb/gal @ 60 °F)				Liquid density of Hd–5 (lb/gal @ 60 °F)
C_3H_8	44.094	0.508	4.235	×	0.95	=	4.0233
nC_4H_{10}	58.12	0.584	4.868	×	0.05	=	0.2434
							4.2667

(ii) Density of the HD–5 fuel:

(0.95 × 4.235) + (0.05 × 4.868) = 4.267 lb/gal @ 60 °F

(iii) Molecular Weights:

(A)

Species	Mol. Wt.
C	12.01115
H	1.00797
0	15.9994
CO	28.01055
CO_2	44.00995
$CH_{2.658}$*	14.6903

*Average ratio of Hydrogen to carbon atoms in HD–5 fuel.

(B)

C_3H_8	8/3	=	2.666×0.95 (% propane)	=	2.533
nC_4H_{10}	10/4	=	2.5×0.05 (% Butane)	=	0.125
					2.568

(iv) Weight of Carbon in:

CO = wt. of CO × (12.01115 / 28.01055) = wt CO × (0.429)

CO_2 = wt. of CO_2 × (12.01115 / 44.00995) wt CO_2 × (0.273)

$CH_{2.658}$ = wt. of $CH_{2.658}$ × (12.01115 / 14.6903) = wt $CH_{2.658}$ × (0.818)

(v) Wt. of Carbon per gallon of LPG:

wt. of carbon = 4.2667 lbs/gal × 453.59 gms/lb × 0.818 = 1583 grams C/gal HD–5

(vi) Fuel economy:

$$\frac{\text{grams C/gal}}{\text{grams C in exhaust/mi}} = \text{miles/gal}$$

$$\text{LPG} = \frac{1583 \text{ gms C/gal}}{(0.818)(\text{HC}) + (0.429)(\text{CO}) + (0.273)(\text{CO}_2)}$$

Where:

HC = CVS HC in grams/mile

CO = CVS CO in grams/mile

CO_2 = CVS CO_2 in grams/mile

For gasoline:

= 2421 / ((0.866)(HC) + (0.429)(CO) + (0.273)(CO_2))

For Natural Gas:

= 1535 / ((0.759)(HC) + (0.429)(CO) + (0.273)(CO_2))

[62 FR 31265, June 6, 1997]

APPENDIX XVII TO PART 86—PROCEDURE FOR DETERMINING VEHICLE EMISSION CONTROL TECHNOLOGY CATEGORY/FUEL REACTIVITY ADJUSTMENT FACTORS FOR LIGHT-DUTY VEHICLES AND LIGHT LIGHT-DUTY TRUCKS CERTIFYING TO THE PROVISIONS OF PART 86, SUBPART R

The following procedure shall be used by the Administrator to establish the reactivity adjustment factor for exhaust emissions of non-methane organic gases (NMOG) and establish the ''methane reactivity adjustment factor'' for exhaust methane emissions from natural gas vehicles, for the purpose of certifying a vehicle of specific emission control technology category and fuel for the National LEV program provisions of subpart R of this part.

(a) The Administrator shall determine representative speciated NMOG exhaust emission profiles for light-duty conventional gasoline-fueled TLEVs, LEVs, and ULEVs according to the following conditions:

(1) All testing will be conducted using a specified gasoline blend representative of

commercial gasoline and having the specifications listed in §86.1771.

(2) Speciated NMOG profiles shall be obtained from a statistically valid number of TLEVs, LEVs, and ULEVs.

(3) The speciated NMOG profiles shall identify and quantify, in units of g/mile or mg/mile, as many constituents as possible in accordance with the procedures specified in Chapter 5 of the California Regulatory Requirements Applicable to the National Low Emission Vehicle Program (October, 1996). These procedures are incorporated by reference (see §86.1).

(b) The ''g ozone potential per mile'' of each NMOG identified in the speciated profile shall be determined by multiplying the ''g/mile NMOG'' emission value of the constituent NMOG by its maximum incremental reactivity in paragraph (j) of this appendix.

(c) The ''total g ozone potential per mile'' of NMOG exhaust emissions from the vehicle/fuel system shall be the sum of all the constituent NMOG ''g ozone potential per mile'' values calculated in paragraph (b) of this appendix.

(d) The ''g ozone potential per g NMOG'' for the vehicle/fuel system shall be determined by dividing the ''total g ozone potential per mile'' value calculated in paragraph (c) of this appendix by the ''total g/mile of NMOG emissions''.

(e) For light-duty candidate vehicle/fuel systems not powered by conventional gasoline, the Administrator shall establish ''reactivity adjustment factors'' calculated from exhaust emission profiles derived according to the same conditions specified in paragraphs (a)(1) and (a)(2) of this appendix.

(f) The ''g ozone potential per g NMOG'' for candidate vehicle/fuel systems not powered by conventional gasoline shall be determined according to paragraphs (b), (c), and (d) of this appendix.

(g)(1) The candidate vehicle/fuel ''reactivity adjustment factor'' shall be determined by dividing the ''g ozone potential per g NMOG'' calculated in paragraph (f) of this appendix by the ''g ozone potential per g NMOG'' value for the vehicle in the same emission control technology category operated on conventional gasoline. The ''g ozone potential per g NMOG'' values for conventional gasoline vehicles are listed in §86.1777(b)(5) or shall be established by the Administrator pursuant to this appendix. For candidate vehicle/fuel systems powered by methanol or liquefied petroleum gas, the quotient calculated above shall be multiplied by 1.1. The resulting value shall constitute the ''reactivity adjustment factor'' for the methanol or liquefied petroleum gas-powered vehicle/fuel system.

(2) For candidate vehicle/fuel systems operating on natural gas, a ''methane reactivity adjustment factor'' shall be calculated by dividing the maximum incremental reactivity value for methane given in paragraph (j) of this appendix by the ''g ozone potential per g NMOG'' value for the vehicle in the same emission control technology category operated on conventional gasoline as listed in §86.1777(b)(5) or established by the Administrator pursuant to this appendix.

(h) The Administrator shall assign a reactivity adjustment factor unique to a specific engine family at the request of a vehicle manufacturer provided that each of the following occurs:

(1)(i) The manufacturer submits speciated NMOG exhaust emission profiles to the Administrator obtained from emission testing a minimum of four different vehicles representative of vehicles that will be certified in the engine family. The test vehicles shall include the official emission-data vehicle(s) for the engine family, and the mileage accumulation of each vehicle shall be at or greater than 4000 miles. One speciated profile shall be submitted for each test vehicle. Emission levels of each constituent NMOG shall be measured according to Chapter 5 of the California Regulatory Requirements Applicable to the National Low Emission Vehicle Program (October, 1996). These procedures are incorporated by reference (see §86.1). For the emission-data vehicle(s), the speciated profile(s) shall be obtained from the same test used to obtain the official exhaust emission test results for the emission-data vehicle at the 4,000 mile test point. The manufacturer shall calculate ''g ozone potential per g NMOG'' values for each speciated NMOG exhaust emission profile in accordance with the procedures specified in paragraphs (b), (c), and (d) of this appendix. By using these ''g ozone potential per g NMOG'' values, the manufacturer shall calculate a ''reactivity adjustment factor'' for each test vehicle in accordance with the procedure specified in paragraph (g) of this appendix. A ''reactivity adjustment factor'' for the engine family shall be calculated by taking the arithmetic mean of the ''reactivity adjustment factor'' obtained for each test vehicle. The 95 percent upper confidence bound (95% UCB) shall be calculated according to the equation:

$$95\%\ \mathrm{UCB} = \mathrm{RAF_m} + 1.96 \times \left[\frac{\sum_{i=1}^{n} \left(\mathrm{RAF_i} - \mathrm{RAF_m}\right)^2}{(n-1)} \right]^{1/2}$$

Where:

RAF_m = mean ''reactivity adjustment factor'' calculated for the engine family.

RAF_i = ''reactivity adjustment factor'' calculated for the i'th test vehicle.

n = number of test vehicles.

(ii) The 95 percent upper confidence bound of the ''reactivity adjustment factor'' for the engine family shall be less than or equal to

115 percent of the engine family ''reactivity adjustment factor.''

(2) The manufacturer submits an ''ozone deterioration factor'' for the engine family. To determine the ''ozone deterioration factor,'' the manufacturer shall perform two tests at each mileage interval for one or more durability vehicle(s) tested in accordance with the procedures and conditions specified in subpart R of this part for calculating mass deterioration factors. The Administrator shall approve the use of other mileage intervals and procedures if the manufacturer can demonstrate that equivalently representative ''ozone deterioration factors'' are obtained. One speciated profile shall be submitted for each test. Emission levels of each constituent NMOG shall be measured according to Chapter 5 of the California Regulatory Requirements Applicable to the National Low Emission Vehicle Program (October, 1996). These procedures are incorporated by reference (see §86.1). A mean g/mi NMOG mass value and a mean ''g ozone per g NMOG'' value shall be calculated by taking the arithmetic mean of each measurement from the speciated profiles. These results shall be multiplied together to obtain a mean ''total g ozone potential per mile'' value at each mileage interval. A mean ''ozone deterioration factor'' shall be calculated in accordance with the procedures in §86.1777 and this appendix except that the mean total ''g ozone potential per mile'' value determined at each mileage interval shall be used in place of measured mass emissions. If the ''ozone deterioration factor'' is determined to be less than 1.00, the ''ozone deterioration factor'' shall be assigned a value of 1.00. The ''ozone deterioration factor'' shall be multiplied by the product of the official exhaust NMOG mass emission results at the 4000 mile test point and the mean ''reactivity adjustment factor'' for the engine family to obtain the NMOG certification levels used to determine compliance with the NMOG emission standards.

(3) The speciated profiles, mean ''reactivity adjustment factor'' for the engine family, and ''ozone deterioration factor'' are provided to the Administrator with the certification application for the engine family.

(i) Gasoline meeting the specifications listed in the following tables shall be used to determine the ''g ozone potential per g NMOG'' of conventional gasoline (the test methods used for each fuel property shall be the same as the test method for the identical fuel property listed in §86.1771):

Fuel property	Limit
Sulfur, ppm by weight	300 ± 50
Benzene, volume percent	1.6 ± 0.3
Reid vapor pressure, psi	8.7 ± 0.3
Distillation, D–86 degrees F	
10%	115–135
50%, maximum	240
90%	323–333
EP, maximum	420
Hydrocarbon Type, volume percent	
Total Aromatics	32 ± 3.0
Multi-substituted alkyl aromatics	21 ± 3.0
Olefins	12 ± 3.0
Saturates	remainder

(j) The maximum incremental reactivities to be used in paragraph (b) of this appendix are provided in the table in this paragraph (j). Any manufacturer which intends to use the table shall submit to the Administrator a list which provides the specific organic gases measured by the manufacturer and the maximum incremental reactivity value assigned to each organic gas prior to or with the submittal of a request for the use of a reactivity adjustment factor unique to a specific engine family. The Administrator may deny such requests if he or she determines that the maximum incremental reactivity value assignments are made incorrectly. The table follows:

MAXIMUM INCREMENTAL REACTIVITY (MIR) VALUES

[Units: grams ozone/gram organic gas]

CAS#	Compound	MIR
	Alcohols	
00067–56–1	methanol	0.56
00064–17–5	ethanol	1.34
	Light End and Mid-Range Hydrocarbons (Listed in approximate elution order)	
	methane	0.0148
00074–85–1	ethene	7.29
00074–86–2	ethyne	0.50
00074–84–0	ethane	0.25
00115–07–1	propene	9.40
00074–98–6	propane	0.48
00463–49–0	1,2-propadiene	10.89
00074–99–7	1-propyne	4.10
00075–28–5	methylpropane	1.21
00115–11–7	2-methylpropene	5.31
00106–98–9	1-butene	8.91
00106–99–0	1,3-butadiene	10.89
00106–97–8	n-butane	1.02
00624–64–6	trans-2-butene	9.94
00463–82–1	2,2-dimethylpropane	0.37
00107–00–6	1-butyne	9.24
00590–18–1	cis-2-butene	9.94
00563–45–1	3-methyl-1-butene	6.22
00078–78–4	2-methylbutane	1.38
00503–17–3	2-butyne	9.24
00109–67–1	1-pentene	6.22
00563–46–2	2-methyl-1-butene	4.90
00109–66–0	n-pentane	1.
00078–79–5	2-methyl-1,3-butadiene	9.08
00646–04–8	trans-2-pentene	8.80
00558–37–2	3,3-dimethyl-1-butene	4.42
00627–20–3	cis-2-pentene	8.80

MAXIMUM INCREMENTAL REACTIVITY (MIR) VALUES—Continued

[Units: grams ozone/gram organic gas]

CAS#	Compound	MIR
00689–97–4	1-buten-3-yne	9.24
00513–35–9	2-methyl-2-butene	6.41
00542–92–7	1,3-cyclopentadiene	7.66
00075–83–2	2,2-dimethylbutane	0.82
00142–29–0	cyclopentene	7.66
00691–37–2	4-methyl-1-pentene	4.42
00760–20–3	3-methyl-1-pentene	4.42
00287–92–3	cyclopentane	2.38
00079–29–8	2,3-dimethylbutane	1.07
01634–04–4	1-methyl-tert-butyl-ether	0.62
00691–38–3	4-methyl-cis-2-pentene	6.69
00107–83–5	2-methylpentane	1.53
00674–76–0	4-methyl-trans-2-pentene	6.69
00096–14–0	3-methylpentane	1.52
00763–29–1	2-methyl-1-pentene	4.42
00592–41–6	1-hexene	4.42
00110–54–3	n-hexane	0.98
13269–52–8	trans-3-hexene	6.69
07642–09–3	cis-3-hexene	6.69
04050–45–7	trans-2-hexene	6.69
00616–12–6	3-methyl-trans-2-pentene	6.69
00625–27–4	2-methyl-2-pentene	6.69
01120–62–3	3-methylcyclopentene	5.65
07688–21–3	cis-2-hexene	6.69
00637–92–3	1-ethyl-tert-butyl-ether	1.98
00922–62–3	3-methyl-cis-2-pentene	6.69
00590–35–2	2,2-dimethylpentane	1.40
00096–37–7	methylcyclopentane	2.82
00108–08–7	2,4-dimethylpentane	1.78
00464–06–2	2,2,3-trimethylbutane	1.32
07385–78–6	3,4-dimethyl-1-pentene	3.48
00693–89–0	1-methylcyclopentene	7.66
00071–43–2	benzene	0.42
03404–61–3	3-methyl-1-hexene	3.48
00562–49–2	3,3-dimethylpentane	0.71
00110–82–7	cyclohexane	1.28
00591–76–4	2-methylhexane	1.08
00565–59–3	2,3-dimethylpentane	1.51
00110–83–8	cyclohexene	5.67
00589–34–4	3-methylhexane	1.40
02532–58–3	cis-1,3-dimethylcyclopentane	2.55
00617–78–7	3-ethylpentane	1.40
00822–50–4	trans-1,2-dimethylcyclopentane	1.85
00592–76–7	1-heptene	3.48
00540–84–1	2,2,4-trimethylpentane	0.93
14686–14–7	trans-3-heptene	5.53
00142–82–5	n-heptane	0.81
02738–19–4	2-methyl-2-hexene	5.53
03899–36–3	3-methyl-trans-3-hexene	5.53
14686–13–6	trans-2-heptene	5.53
00816–79–5	3-ethyl-2-pentene	5.53
00107–39–1	2,4,4-trimethyl-1-pentene	2.69
10574–37–5	2,3-dimethyl-2-pentene	5.53
06443–92–1	cis-2-heptene	5.53
00108–87–2	methylcyclohexane	1.85
00590–73–8	2,2-dimethylhexane	1.20
00107–40–4	2,4,4-trimethyl-2-pentene	5.29
01640–89–7	ethylcyclopentane	2.31
00592–13–2	2,5-dimethylhexane	1.63
00589–43–5	2,4-dimethylhexane	1.50
00563–16–6	3,3-dimethylhexane	1.20
00565–75–3	2,3,4-trimethylpentane	1.60
00560–21–4	2,3,3-trimethylpentane	1.20
00108–88–3	toluene	2.73
00584–94–1	2,3-dimethylhexane	1.32
00592–27–8	2-methylheptane	0.96
00589–53–7	4-methylheptane	1.20
00589–81–1	3-methylheptane	0.99
15890–40–1	(1a,2a,3b) -1,2,3-trimethylcyclopentane.	1.94

MAXIMUM INCREMENTAL REACTIVITY (MIR) VALUES—Continued

[Units: grams ozone/gram organic gas]

CAS#	Compound	MIR
00638– –0	cis-1,3-dimethylcyclohexane	1.94
02207– –7	trans-1,4-dimethylcyclohexane	1.94
03522–94–9	2,2,5-trimethylhexane	0.97
00111–66–0	1-octene	2.69
14850–23–8	trans-4-octene	5.29
00111–65–9	n-octane	0.61
13389–42–9	trans-2-octene	5.29
02207–03–6	trans-1,3-dimethylcyclohexane	1.94
07642– –8	cis-2-octene	5.29
01069–53–0	2,3,5-trimethylhexane	1.14
02213–23–2	2,4-dimethylheptane	1.34
02207–01–4	cis-1,2-dimethylcyclohexane	1.94
01678–91–7	ethylcyclohexane	1.94
00926–82–9	3,5-dimethylheptane	1.14
00100–41–4	ethylbenzene	2.70
03074–71–3	2,3-dimethylheptane	1.14
00108–38–3	m-&p-xylene	7.64
02216–34–4	4-methyloctane	1.14
03221–61–2	2-methyloctane	1.14
02216–33–3	3-methyloctane	1.14
00100–42–5	styrene(ethenylbenzene)	2.22
00095–47–6	o-xylene	6.46
00124–11–8	1-nonene	2.23
00111–84–2	n-nonane	0.54
00098–82–8	(1-methylethyl)benzene	2.24
15869–87–1	2,2-dimethyloctane	1.01
04032–94–4	2,4-dimethyloctane	1.01
00103–65–1	n-propylbenzene	2.12
00620–14–4	1-methyl-3-ethylbenzene	7.20
00622–96–8	1-methyl-4-ethylbenzene	7.20
00108–67–8	1,3,5-trimethylbenzene	10.12
00611–14–3	1-methyl-2-ethylbenzene	7.20
00095–63–6	1,2,4-trimethylbenzene	8.83
00124–18–5	n-decane	0.47
00538–93–2	(2-methylpropyl)benzene	1.87
00135–98–8	(1-methylpropyl)benzene	1.89
00535–77–3	1-methyl-3-(1-methylethyl)benzene.	6.45
00526–73–8	1,2,3-trimethylbenzene	8.85
00099–87–6	1-methyl-4-(1-methylethyl)benzene.	6.45
00496–11–7	2,3-dihydroindene(indan)	1.06
00527–84–4	1-methyl-2-(1-methylethyl)benzene.	6.45
00141–93–5	1,3-diethylbenzene	6.45
00105–05–5	1,4-diethylbenzene	6.45
01074–43–7	1-methyl-3-n-propylbenzene	6.45
01074–55–1	1-methyl-4-n-propylbenzene	6.45
00135–01–3	1,2-diethylbenzene	6.45
01074–17–5	1-methyl-2-n-propylbenzene	6.45
01758–88–9	1,4-dimethyl-2-ethylbenzene	9.07
00874–41–9	1,3-dimethyl-4-ethylbenzene	9.07
00934–80–5	1,2-dimethyl-4-ethylbenzene	9.07
02870–04–4	1,3-dimethyl-2-ethylbenzene	9.07
01120–21–4	n-undecane(hendecane)	0.42
00933–98–2	1,2-dimethyl-3-ethylbenzene	9.07
00095–93–2	1,2,4,5-tetramethylbenzene	9.07
03968–85–2	(2-methylbutyl)benzene	1.07
00527–53–7	1,2,3,5-tetramethylbenzene	9.07
01074–92–6	1-(1,1-dimethylethyl)-2-methylbenzene.	5.84
00488–23–3	1,2,3,4-tetramethylbenzene	9.07
00538–68–1	n-pentylbenzene	1.70
00098–19–1	1-(1,1-dimethylethyl)-3,5-DMbenzene.	7.50
00091–20–3	naphthalene	1.18
00112–40–3	n-dodecane	0.38

MAXIMUM INCREMENTAL REACTIVITY (MIR) VALUES—Continued

[Units: grams ozone/gram organic gas]

CAS#	Compound	MIR
	Carbonyl Compounds	
00050–00–0	formaldehyde	7.15
00075–07–0	acetaldehyde	5.52
00107–02–8	acrolein	6.77
00067–64–1	acetone	0.56
00123–33–6	propionaldehyde	6.53
00123–72–8	butyraldehyde	5.26
00066–25–1	hexanaldehyde	3.79
00100–52–7	benzaldehyde	-0.55
00078–93–3	methyl ethyl ketone (2-butanone)	1.18
00078–85–3	methacrolein	6.77
04170–30–3	crotonaldehyde	5.42
00110–62–3	valeraldehyde	4.41
00620–23–5	m-tolualdehyde	-0.55

[62 FR 31266, June 6, 1997]

APPENDIX XVIII TO PART 86—STATISTICAL OUTLIER IDENTIFICATION PROCEDURE FOR LIGHT-DUTY VEHICLES AND LIGHT LIGHT-DUTY TRUCKS CERTIFYING TO THE PROVISIONS OF PART 86, SUBPART R

Residual normal deviates to indicate outliers are used routinely and usefully in analyzing regression data, but suffer theoretical deficiencies if statistical significance tests are required. Consequently, the procedure for testing for outliers outlined by Snedecor and Cochran, 6th ed., *Statistical Methods*, PP. 157–158, will be used. The method will be described generally, then by appropriate formulae, and finally a numerical example will be given.

(a) Linearity is assumed (as in the rest of the deterioration factor calculation procedure), and each contaminant is treated separately. The procedure is as follows:

(1) Calculate the deterioration factor regression as usual, and determine the largest residual in absolute value. Then recalculate the regression with the suspected outlier omitted. From the new regression line calculate the residual at the deleted point, denoted as $(y_i - y_i')$. Obtain a statistic by dividing $(y_i - y_i')$ by the square root of the estimated variance of $(y_i - y_i')$. Find the tailed probability, p, from the t-distribution corresponding to the quotient (double-tailed), with n-3 degrees of freedom, with n the original sample size.

(2) This probability, p, assumes the suspected outlier is randomly selected, which is not true. Therefore, the outlier will be rejected only if $1 - (1\text{-}p)^n < 0.05$.

(3) The procedure will be repeated for each contaminant individually until the above procedure indicates no outliers are present.

(4) When an outlier is found, the vehicle test-log will be examined. If an unusual vehicle malfunction is indicated, data for all contaminants at that test-point will be rejected; otherwise, only the identified outlier will be omitted in calculating the deterioration factor.

(b) Procedure for the calculation of the t-Statistic for Deterioration Data Outlier Test.

(1) Given a set of n points, (x_1, y_1), (x_2, y_2) * * * (x_n, y_n).

Where:

x_i is the mileage of the ith data point.

y_i is the emission of the ith data point.

Assume model:

$y = a + \beta(x - \bar{x}) + \epsilon$

(2)(i) Calculate the regression line.

$\hat{y} = a + b(x - \bar{x})$

(ii) Suppose the absolute value of the ith residual

$(y_i - \hat{y}_i)$ is the largest.

(3)(i) Calculate the regression line with the ith point deleted.

$\hat{y}' = a' + b'(x - \bar{x})$

(ii)

$$\text{Let } t = \frac{\left((y_i - \hat{y}_i')\right)}{\sqrt{\hat{\text{var}}\left(y_i - \hat{y}_i'\right)}}$$

Where:

y_1 is the observed suspected outlier.

$\hat{y}'_i$ is the predicted value with the suspected outlier deleted.

$$\hat{\text{var}}\left(y_i - \hat{y}_i'\right) = S_2\left(1 + \frac{1}{n-1} + \frac{(x_i - x)^2}{\sum_{j=1}^{n}(x - \bar{x})^2}\right), j \neq i$$

(x is calculated without the suspected outlier)

$$S_2 = \frac{\sum_{j=1}^{n}\left(y_j - \bar{y}_j'\right)^2}{n-3}, j \neq i$$

(iii) Find p from the t-statistic table

Where:

$p = \text{prob}\ (|t(n\text{-}3)| \geq t)$

t(n–3) is a t-distributed variable with n–3 degrees of freedom.

(iv) y_i is an outlier if $1-(1-p)^n < .05$

x	y	$\hat{y}$	$y - \hat{y}$
8	59	56.14	2.86
6	58	58.17	−0.17
11	56	53.10	2.90
22[1]	53	41.96	11.04
14	50	50.06	−0.06
17	45	47.03	−2.03
18	43	46.01	−3.01
24	42	39.94	2.06

x	y	$\hat{y}$	$y - \hat{y}$
19	39	45.00	−6.00
23	38	40.95	−2.95
26	30	37.91	−7.91
40	27	23.73	3.27

[1] Suspected outlier.

(4)(i) Assume model:

$y = a + \beta(x - \bar{x}) + \in$

$y = 45 - 1.013(x - \bar{x})$

(ii) Suspected point out of regression:

$y = 44.273 - 1.053(x - \bar{x})$

$y = 44.273 - 1.053(22 - 18.727) = 40.827$

$y_i - \hat{y}'_i = 12.173$

$$\hat{var}\left(y_i - \hat{y}_i^{'}\right) = S^2\left(1 + \frac{1}{11} + \frac{10.711}{914.182}\right)$$

[62 FR 31270, June 6, 1997; 62 FR 45289, Aug. 26, 1997, as amended at 63 FR 987, Jan. 7, 1998]

FINDING AIDS

A list of CFR titles, subtitles, chapters, subchapters and parts and an alphabetical list of agencies publishing in the CFR are included in the CFR Index and Finding Aids volume to the Code of Federal Regulations which is published separately and revised annually.

Material Approved for Incorporation by Reference
Table of CFR Titles and Chapters
Alphabetical List of Agencies Appearing in the CFR
Table of OMB Control Numbers
List of CFR Sections Affected

Material Approved for Incorporation by Reference

(Revised as of July 1, 1998)

The Director of the Federal Register has approved under 5 U.S.C. 552(a) and 1 CFR Part 51 the incorporation by reference of the following publications. This list contains only those incorporations by reference effective as of the revision date of this volume. Incorporations by reference found within a regulation are effective upon the effective date of that regulation. For more information on incorporation by reference, see the preliminary pages of this volume.

40 CFR (PART 86)
ENVIRONMENTAL PROTECTION AGENCY

	40 CFR
American National Standards Institute 11 West 42nd Street, New York, NY 10036 Telephone: (212) 642–4900	
ANSI/AGA NGV1–1994, Standard for Compressed Natural Gas Vehicle (NGV) Fueling Connection Devices.	86.1; 86.001–9; 86.004–9; 86.098–8; 86.099–8
American Society for Testing and Materials 100 Barr Harbor Drive, West Conshohocken, PA 19428–2959, Telephone: (610) 832–9585, FAX (610) FAX (610) 832–9555	
ASTM D 1945–91, Standard Test Method for Analysis of Natural Gas by Gas Chromatography.	86.1; 86.113–94; 86.1213–94; 86.1313–94
ASTM D 2163–91, Standard Test Method for Analysis of Liquefied Petroleum (LP) Gases and Propene Concentrates by Gas Chromatography.	86.1; 86.1213–94; 86.1313–94
ASTM D5186–91, Standard Test Method for Determination of Aromatic Content of Diesel Fuels by Supercritical Fluid Chromatography.	86.1313–91; 86.1313–94; 86.1313–98
ASTM E29–67 (Reapproved 1980) Standard Recommended Practice for Indicating Which Places of Figures Are To Be Considered Significant In Specified Limiting Values.	86.094–26; 86.094–28; 86.1105–87
ASTM E29–90, Standard Practice for Using Significant Digits in Test Data to Determine Conformance with Specifications.	86.1; 86.000–26; 86.000–28; 86.001–28; 86.609–96; 86.1009–84; 86.1009–96; 86.1442
ASTM F29–93a, Standard Practice for Using Significant Digits in Test Data to Determine Conformance with Specifications.	86.098–15; 86.004–15
Society of Automotive Engineers 400 Commonwealth Dr., Warrendale, PA 15096, Telephone: (412) 776–4841	
SAE J1151, Methane Measurement Using Gas Chromatography, Dec. 1991.	86.111–94(b)(3); 86.1311–94(b)(2)
SAE J1349, Engine Power Test Code-Spark Ignition and Compression Ignition-Net Power Rating.	86.094–8; 86.096–8

40 CFR (PART 86)—Continued

ENVIRONMENTAL PROTECTION AGENCY—Continued

	40 CFR
SAE J1850, Class B Data Communication Network Interface, August 1991.	86.095–17
SAE J1877, Recommended Practice for Bar-Coded Vehicle Identification Number Label, May 1988.	86.094–35; 86.095–35
SAE J1892, Recommenced Practice for Bar-Coded Vehicle Emission Configuration Label, May 1988.	86.094–35; 86.095–35
SAE J1937, November 1989, Engine Testing with Low Temperature Charge Air Cooler Systems in a Dynamometer Test Cell.	86.1330–84; 86.1330–90
SAE J1962, Diagnostic Connector, June 1992	86.094–17
SAE J1979, E/E Diagnostic Test Modes, December 1991	86.094–17
SAE J2012, Diagnostic Trouble Code Definitions, March 1992	86.094–17
SAE J2186, E/E Data Link Security, September 1991	86.094–18
State of California	
California Regulatory Requirements Applicable to the Evaporative Emissions Program, January 4, 1995.	86.1; 86.096–8; 86.096–9; 86.096.10

Table of CFR Titles and Chapters

(Revised as of June 29, 1998)

Title 1—General Provisions

I Administrative Committee of the Federal Register (Parts 1—49)

II Office of the Federal Register (Parts 50—299)

IV Miscellaneous Agencies (Parts 400—500)

Title 2—[Reserved]

Title 3—The President

I Executive Office of the President (Parts 100—199)

Title 4—Accounts

I General Accounting Office (Parts 1—99)

II Federal Claims Collection Standards (General Accounting Office—Department of Justice) (Parts 100—299)

Title 5—Administrative Personnel

I Office of Personnel Management (Parts 1—1199)

II Merit Systems Protection Board (Parts 1200—1299)

III Office of Management and Budget (Parts 1300—1399)

IV Advisory Committee on Federal Pay (Parts 1400—1499)

V The International Organizations Employees Loyalty Board (Parts 1500—1599)

VI Federal Retirement Thrift Investment Board (Parts 1600—1699)

VII Advisory Commission on Intergovernmental Relations (Parts 1700—1799)

VIII Office of Special Counsel (Parts 1800—1899)

IX Appalachian Regional Commission (Parts 1900—1999)

XI Armed Forces Retirement Home (Part 2100)

XIV Federal Labor Relations Authority, General Counsel of the Federal Labor Relations Authority and Federal Service Impasses Panel (Parts 2400—2499)

XV Office of Administration, Executive Office of the President (Parts 2500—2599)

XVI Office of Government Ethics (Parts 2600—2699)

XXI Department of the Treasury (Parts 3100—3199)

Title 5—Administrative Personnel—Continued

Chap.	
XXII	Federal Deposit Insurance Corporation (Part 3201)
XXIII	Department of Energy (Part 3301)
XXIV	Federal Energy Regulatory Commission (Part 3401)
XXV	Department of the Interior (Part 3501)
XXVI	Department of Defense (Part 3601)
XXVIII	Department of Justice (Part 3801)
XXIX	Federal Communications Commission (Parts 3900—3999)
XXX	Farm Credit System Insurance Corporation (Parts 4000—4099)
XXXI	Farm Credit Administration (Parts 4100—4199)
XXXIII	Overseas Private Investment Corporation (Part 4301)
XXXV	Office of Personnel Management (Part 4501)
XL	Interstate Commerce Commission (Part 5001)
XLI	Commodity Futures Trading Commission (Part 5101)
XLII	Department of Labor (Part 5201)
XLIII	National Science Foundation (Part 5301)
XLV	Department of Health and Human Services (Part 5501)
XLVI	Postal Rate Commission (Part 5601)
XLVII	Federal Trade Commission (Part 5701)
XLVIII	Nuclear Regulatory Commission (Part 5801)
L	Department of Transportation (Part 6001)
LII	Export-Import Bank of the United States (Part 6201)
LIII	Department of Education (Parts 6300—6399)
LIV	Environmental Protection Agency (Part 6401)
LVII	General Services Administration (Part 6701)
LVIII	Board of Governors of the Federal Reserve System (Part 6801)
LIX	National Aeronautics and Space Administration (Part 6901)
LX	United States Postal Service (Part 7001)
LXI	National Labor Relations Board (Part 7101)
LXII	Equal Employment Opportunity Commission (Part 7201)
LXIII	Inter-American Foundation (Part 7301)
LXV	Department of Housing and Urban Development (Part 7501)
LXVI	National Archives and Records Administration (Part 7601)
LXIX	Tennessee Valley Authority (Part 7901)
LXXI	Consumer Product Safety Commission (Part 8101)
LXXIV	Federal Mine Safety and Health Review Commission (Part 8401)
LXXVI	Federal Retirement Thrift Investment Board (Part 8601)
LXXVII	Office of Management and Budget (Part 8701)

Title 6—[Reserved]

Title 7—Agriculture

SUBTITLE A—Office of the Secretary of Agriculture (Parts 0—26)
SUBTITLE B—Regulations of the Department of Agriculture

Title 7—Agriculture—Continued

Chap.	
I	Agricultural Marketing Service (Standards, Inspections, Marketing Practices), Department of Agriculture (Parts 27—209)
II	Food and Nutrition Service, Department of Agriculture (Parts 210—299)
III	Animal and Plant Health Inspection Service, Department of Agriculture (Parts 300—399)
IV	Federal Crop Insurance Corporation, Department of Agriculture (Parts 400—499)
V	Agricultural Research Service, Department of Agriculture (Parts 500—599)
VI	Natural Resources Conservation Service, Department of Agriculture (Parts 600—699)
VII	Farm Service Agency, Department of Agriculture (Parts 700—799)
VIII	Grain Inspection, Packers and Stockyards Administration (Federal Grain Inspection Service), Department of Agriculture (Parts 800—899)
IX	Agricultural Marketing Service (Marketing Agreements and Orders; Fruits, Vegetables, Nuts), Department of Agriculture (Parts 900—999)
X	Agricultural Marketing Service (Marketing Agreements and Orders; Milk), Department of Agriculture (Parts 1000—1199)
XI	Agricultural Marketing Service (Marketing Agreements and Orders; Miscellaneous Commodities), Department of Agriculture (Parts 1200—1299)
XIII	Northeast Dairy Compact Commission (Parts 1300—1399)
XIV	Commodity Credit Corporation, Department of Agriculture (Parts 1400—1499)
XV	Foreign Agricultural Service, Department of Agriculture (Parts 1500—1599)
XVI	Rural Telephone Bank, Department of Agriculture (Parts 1600—1699)
XVII	Rural Utilities Service, Department of Agriculture (Parts 1700—1799)
XVIII	Rural Housing Service, Rural Business-Cooperative Service, Rural Utilities Service, and Farm Service Agency, Department of Agriculture (Parts 1800—2099)
XXVI	Office of Inspector General, Department of Agriculture (Parts 2600—2699)
XXVII	Office of Information Resources Management, Department of Agriculture (Parts 2700—2799)
XXVIII	Office of Operations, Department of Agriculture (Parts 2800—2899)
XXIX	Office of Energy, Department of Agriculture (Parts 2900—2999)
XXX	Office of the Chief Financial Officer, Department of Agriculture (Parts 3000—3099)
XXXI	Office of Environmental Quality, Department of Agriculture (Parts 3100—3199)
XXXII	[Reserved]

Title 7—Agriculture—Continued

Chap.	
XXXIII	Office of Transportation, Department of Agriculture (Parts 3300—3399)
XXXIV	Cooperative State Research, Education, and Extension Service, Department of Agriculture (Parts 3400—3499)
XXXV	Rural Housing Service, Department of Agriculture (Parts 3500—3599)
XXXVI	National Agricultural Statistics Service, Department of Agriculture (Parts 3600—3699)
XXXVII	Economic Research Service, Department of Agriculture (Parts 3700—3799)
XXXVIII	World Agricultural Outlook Board, Department of Agriculture (Parts 3800—3899)
XLI	[Reserved]
XLII	Rural Business-Cooperative Service and Rural Utilities Service, Department of Agriculture (Parts 4200—4299)

Title 8—Aliens and Nationality

I	Immigration and Naturalization Service, Department of Justice (Parts 1—499)

Title 9—Animals and Animal Products

I	Animal and Plant Health Inspection Service, Department of Agriculture (Parts 1—199)
II	Grain Inspection, Packers and Stockyards Administration (Packers and Stockyards Programs), Department of Agriculture (Parts 200—299)
III	Food Safety and Inspection Service, Meat and Poultry Inspection, Department of Agriculture (Parts 300—599)

Title 10—Energy

I	Nuclear Regulatory Commission (Parts 0—199)
II	Department of Energy (Parts 200—699)
III	Department of Energy (Parts 700—999)
X	Department of Energy (General Provisions) (Parts 1000—1099)
XI	United States Enrichment Corporation (Parts 1100—1199)
XVII	Defense Nuclear Facilities Safety Board (Parts 1700—1799)

Title 11—Federal Elections

I	Federal Election Commission (Parts 1—9099)

Title 12—Banks and Banking

I	Comptroller of the Currency, Department of the Treasury (Parts 1—199)
II	Federal Reserve System (Parts 200—299)

Title 12—Banks and Banking—Continued

Chap.

III Federal Deposit Insurance Corporation (Parts 300—399)

IV Export-Import Bank of the United States (Parts 400—499)

V Office of Thrift Supervision, Department of the Treasury (Parts 500—599)

VI Farm Credit Administration (Parts 600—699)

VII National Credit Union Administration (Parts 700—799)

VIII Federal Financing Bank (Parts 800—899)

IX Federal Housing Finance Board (Parts 900—999)

XI Federal Financial Institutions Examination Council (Parts 1100—1199)

XIV Farm Credit System Insurance Corporation (Parts 1400—1499)

XV Thrift Depositor Protection Oversight Board (Parts 1500—1599)

XVII Office of Federal Housing Enterprise Oversight, Department of Housing and Urban Development (Parts 1700-1799)

XVIII Community Development Financial Institutions Fund, Department of the Treasury (Parts 1800—1899)

Title 13—Business Credit and Assistance

I Small Business Administration (Parts 1—199)

III Economic Development Administration, Department of Commerce (Parts 300—399)

Title 14—Aeronautics and Space

I Federal Aviation Administration, Department of Transportation (Parts 1—199)

II Office of the Secretary, Department of Transportation (Aviation Proceedings) (Parts 200—399)

III Commercial Space Transportation, Federal Aviation Administration, Department of Transportation (Parts 400—499)

V National Aeronautics and Space Administration (Parts 1200—1299)

Title 15—Commerce and Foreign Trade

SUBTITLE A—Office of the Secretary of Commerce (Parts 0—29)

SUBTITLE B—Regulations Relating to Commerce and Foreign Trade

I Bureau of the Census, Department of Commerce (Parts 30—199)

II National Institute of Standards and Technology, Department of Commerce (Parts 200—299)

III International Trade Administration, Department of Commerce (Parts 300—399)

IV Foreign-Trade Zones Board, Department of Commerce (Parts 400—499)

VII Bureau of Export Administration, Department of Commerce (Parts 700—799)

Title 15—Commerce and Foreign Trade—Continued

Chap.

VIII Bureau of Economic Analysis, Department of Commerce (Parts 800—899)

IX National Oceanic and Atmospheric Administration, Department of Commerce (Parts 900—999)

XI Technology Administration, Department of Commerce (Parts 1100—1199)

XIII East-West Foreign Trade Board (Parts 1300—1399)

XIV Minority Business Development Agency (Parts 1400—1499)

SUBTITLE C—Regulations Relating to Foreign Trade Agreements

XX Office of the United States Trade Representative (Parts 2000—2099)

SUBTITLE D—Regulations Relating to Telecommunications and Information

XXIII National Telecommunications and Information Administration, Department of Commerce (Parts 2300—2399)

Title 16—Commercial Practices

I Federal Trade Commission (Parts 0—999)

II Consumer Product Safety Commission (Parts 1000—1799)

Title 17—Commodity and Securities Exchanges

I Commodity Futures Trading Commission (Parts 1—199)

II Securities and Exchange Commission (Parts 200—399)

IV Department of the Treasury (Parts 400—499)

Title 18—Conservation of Power and Water Resources

I Federal Energy Regulatory Commission, Department of Energy (Parts 1—399)

III Delaware River Basin Commission (Parts 400—499)

VI Water Resources Council (Parts 700—799)

VIII Susquehanna River Basin Commission (Parts 800—899)

XIII Tennessee Valley Authority (Parts 1300—1399)

Title 19—Customs Duties

I United States Customs Service, Department of the Treasury (Parts 1—199)

II United States International Trade Commission (Parts 200—299)

III International Trade Administration, Department of Commerce (Parts 300—399)

Title 20—Employees' Benefits

I Office of Workers' Compensation Programs, Department of Labor (Parts 1—199)

Title 20—Employees' Benefits—Continued

Chap.

II Railroad Retirement Board (Parts 200—399)

III Social Security Administration (Parts 400—499)

IV Employees' Compensation Appeals Board, Department of Labor (Parts 500—599)

V Employment and Training Administration, Department of Labor (Parts 600—699)

VI Employment Standards Administration, Department of Labor (Parts 700—799)

VII Benefits Review Board, Department of Labor (Parts 800—899)

VIII Joint Board for the Enrollment of Actuaries (Parts 900—999)

IX Office of the Assistant Secretary for Veterans' Employment and Training, Department of Labor (Parts 1000—1099)

Title 21—Food and Drugs

I Food and Drug Administration, Department of Health and Human Services (Parts 1—1299)

II Drug Enforcement Administration, Department of Justice (Parts 1300—1399)

III Office of National Drug Control Policy (Parts 1400—1499)

Title 22—Foreign Relations

I Department of State (Parts 1—199)

II Agency for International Development, International Development Cooperation Agency (Parts 200—299)

III Peace Corps (Parts 300—399)

IV International Joint Commission, United States and Canada (Parts 400—499)

V United States Information Agency (Parts 500—599)

VI United States Arms Control and Disarmament Agency (Parts 600—699)

VII Overseas Private Investment Corporation, International Development Cooperation Agency (Parts 700—799)

IX Foreign Service Grievance Board Regulations (Parts 900—999)

X Inter-American Foundation (Parts 1000—1099)

XI International Boundary and Water Commission, United States and Mexico, United States Section (Parts 1100—1199)

XII United States International Development Cooperation Agency (Parts 1200—1299)

XIII Board for International Broadcasting (Parts 1300—1399)

XIV Foreign Service Labor Relations Board; Federal Labor Relations Authority; General Counsel of the Federal Labor Relations Authority; and the Foreign Service Impasse Disputes Panel (Parts 1400—1499)

XV African Development Foundation (Parts 1500—1599)

XVI Japan-United States Friendship Commission (Parts 1600—1699)

XVII United States Institute of Peace (Parts 1700—1799)

Title 23—Highways

Chap.

I Federal Highway Administration, Department of Transportation (Parts 1—999)

II National Highway Traffic Safety Administration and Federal Highway Administration, Department of Transportation (Parts 1200—1299)

III National Highway Traffic Safety Administration, Department of Transportation (Parts 1300—1399)

Title 24—Housing and Urban Development

SUBTITLE A—Office of the Secretary, Department of Housing and Urban Development (Parts 0—99)

SUBTITLE B—Regulations Relating to Housing and Urban Development

I Office of Assistant Secretary for Equal Opportunity, Department of Housing and Urban Development (Parts 100—199)

II Office of Assistant Secretary for Housing-Federal Housing Commissioner, Department of Housing and Urban Development (Parts 200—299)

III Government National Mortgage Association, Department of Housing and Urban Development (Parts 300—399)

V Office of Assistant Secretary for Community Planning and Development, Department of Housing and Urban Development (Parts 500—599)

VI Office of Assistant Secretary for Community Planning and Development, Department of Housing and Urban Development (Parts 600—699) [Reserved]

VII Office of the Secretary, Department of Housing and Urban Development (Housing Assistance Programs and Public and Indian Housing Programs) (Parts 700—799)

VIII Office of the Assistant Secretary for Housing—deral Housing Commissioner, Department of Housing and Urban Development (Section 8 Housing Assistance Programs and Section 202 Direct Loan Program) (Parts 800—899)

IX Office of Assistant Secretary for Public and Indian Housing, Department of Housing and Urban Development (Parts 900—999)

X Office of Assistant Secretary for Housing—Federal Housing Commissioner, Department of Housing and Urban Development (Interstate Land Sales Registration Program) (Parts 1700—1799)

XII Office of Inspector General, Department of Housing and Urban Development (Parts 2000—2099)

XX Office of Assistant Secretary for Housing—Federal Housing Commissioner, Department of Housing and Urban Development (Parts 3200—3899)

XXV Neighborhood Reinvestment Corporation (Parts 4100—4199)

Title 25—Indians

I Bureau of Indian Affairs, Department of the Interior (Parts 1—299)

Title 25—Indians—Continued

Chap.

II Indian Arts and Crafts Board, Department of the Interior (Parts 300—399)

III National Indian Gaming Commission, Department of the Interior (Parts 500—599)

IV Office of Navajo and Hopi Indian Relocation (Parts 700—799)

V Bureau of Indian Affairs, Department of the Interior, and Indian Health Service, Department of Health and Human Services (Part 900)

VI Office of the Assistant Secretary-Indian Affairs, Department of the Interior (Part 1001)

VII Office of the Special Trustee for American Indians, Department of the Interior (Part 1200)

Title 26—Internal Revenue

I Internal Revenue Service, Department of the Treasury (Parts 1—799)

Title 27—Alcohol, Tobacco Products and Firearms

I Bureau of Alcohol, Tobacco and Firearms, Department of the Treasury (Parts 1—299)

Title 28—Judicial Administration

I Department of Justice (Parts 0—199)

III Federal Prison Industries, Inc., Department of Justice (Parts 300—399)

V Bureau of Prisons, Department of Justice (Parts 500—599)

VI Offices of Independent Counsel, Department of Justice (Parts 600—699)

VII Office of Independent Counsel (Parts 700—799)

Title 29—Labor

SUBTITLE A—Office of the Secretary of Labor (Parts 0—99)

SUBTITLE B—Regulations Relating to Labor

I National Labor Relations Board (Parts 100—199)

II Office of Labor-Management Standards, Department of Labor (Parts 200—299)

III National Railroad Adjustment Board (Parts 300—399)

IV Office of Labor-Management Standards, Department of Labor (Parts 400—499)

V Wage and Hour Division, Department of Labor (Parts 500—899)

IX Construction Industry Collective Bargaining Commission (Parts 900—999)

X National Mediation Board (Parts 1200—1299)

XII Federal Mediation and Conciliation Service (Parts 1400—1499)

XIV Equal Employment Opportunity Commission (Parts 1600—1699)

Title 29—Labor—Continued

Chap.

XVII Occupational Safety and Health Administration, Department of Labor (Parts 1900—1999)

XX Occupational Safety and Health Review Commission (Parts 2200—2499)

XXV Pension and Welfare Benefits Administration, Department of Labor (Parts 2500—2599)

XXVII Federal Mine Safety and Health Review Commission (Parts 2700—2799)

XL Pension Benefit Guaranty Corporation (Parts 4000—4999)

Title 30—Mineral Resources

I Mine Safety and Health Administration, Department of Labor (Parts 1—199)

II Minerals Management Service, Department of the Interior (Parts 200—299)

III Board of Surface Mining and Reclamation Appeals, Department of the Interior (Parts 300—399)

IV Geological Survey, Department of the Interior (Parts 400—499)

VI Bureau of Mines, Department of the Interior (Parts 600—699)

VII Office of Surface Mining Reclamation and Enforcement, Department of the Interior (Parts 700—999)

Title 31—Money and Finance: Treasury

SUBTITLE A—Office of the Secretary of the Treasury (Parts 0—50)

SUBTITLE B—Regulations Relating to Money and Finance

I Monetary Offices, Department of the Treasury (Parts 51—199)

II Fiscal Service, Department of the Treasury (Parts 200—399)

IV Secret Service, Department of the Treasury (Parts 400—499)

V Office of Foreign Assets Control, Department of the Treasury (Parts 500—599)

VI Bureau of Engraving and Printing, Department of the Treasury (Parts 600—699)

VII Federal Law Enforcement Training Center, Department of the Treasury (Parts 700—799)

VIII Office of International Investment, Department of the Treasury (Parts 800—899)

Title 32—National Defense

SUBTITLE A—Department of Defense

I Office of the Secretary of Defense (Parts 1—399)

V Department of the Army (Parts 400—699)

VI Department of the Navy (Parts 700—799)

VII Department of the Air Force (Parts 800—1099)

SUBTITLE B—Other Regulations Relating to National Defense

Title 32—National Defense—Continued

Chap.

XII Defense Logistics Agency (Parts 1200—1299)

XVI Selective Service System (Parts 1600—1699)

XIX Central Intelligence Agency (Parts 1900—1999)

XX Information Security Oversight Office, National Archives and Records Administration (Parts 2000—2099)

XXI National Security Council (Parts 2100—2199)

XXIV Office of Science and Technology Policy (Parts 2400—2499)

XXVII Office for Micronesian Status Negotiations (Parts 2700—2799)

XXVIII Office of the Vice President of the United States (Parts 2800—2899)

XXIX Presidential Commission on the Assignment of Women in the Armed Forces (Part 2900)

Title 33—Navigation and Navigable Waters

I Coast Guard, Department of Transportation (Parts 1—199)

II Corps of Engineers, Department of the Army (Parts 200—399)

IV Saint Lawrence Seaway Development Corporation, Department of Transportation (Parts 400—499)

Title 34—Education

SUBTITLE A—Office of the Secretary, Department of Education (Parts 1—99)

SUBTITLE B—Regulations of the Offices of the Department of Education

I Office for Civil Rights, Department of Education (Parts 100—199)

II Office of Elementary and Secondary Education, Department of Education (Parts 200—299)

III Office of Special Education and Rehabilitative Services, Department of Education (Parts 300—399)

IV Office of Vocational and Adult Education, Department of Education (Parts 400—499)

V Office of Bilingual Education and Minority Languages Affairs, Department of Education (Parts 500—599)

VI Office of Postsecondary Education, Department of Education (Parts 600—699)

VII Office of Educational Research and Improvement, Department of Education (Parts 700—799)

XI National Institute for Literacy (Parts 1100-1199)

SUBTITLE C—Regulations Relating to Education

XII National Council on Disability (Parts 1200—1299)

Title 35—Panama Canal

I Panama Canal Regulations (Parts 1—299)

Title 36—Parks, Forests, and Public Property

Chap.

I National Park Service, Department of the Interior (Parts 1—199)

II Forest Service, Department of Agriculture (Parts 200—299)

III Corps of Engineers, Department of the Army (Parts 300—399)

IV American Battle Monuments Commission (Parts 400—499)

V Smithsonian Institution (Parts 500—599)

VII Library of Congress (Parts 700—799)

VIII Advisory Council on Historic Preservation (Parts 800—899)

IX Pennsylvania Avenue Development Corporation (Parts 900—999)

XI Architectural and Transportation Barriers Compliance Board (Parts 1100—1199)

XII National Archives and Records Administration (Parts 1200—1299)

XIV Assassination Records Review Board (Parts 1400-1499)

Title 37—Patents, Trademarks, and Copyrights

I Patent and Trademark Office, Department of Commerce (Parts 1—199)

II Copyright Office, Library of Congress (Parts 200—299)

IV Assistant Secretary for Technology Policy, Department of Commerce (Parts 400—499)

V Under Secretary for Technology, Department of Commerce (Parts 500—599)

Title 38—Pensions, Bonuses, and Veterans' Relief

I Department of Veterans Affairs (Parts 0—99)

Title 39—Postal Service

I United States Postal Service (Parts 1—999)

III Postal Rate Commission (Parts 3000—3099)

Title 40—Protection of Environment

I Environmental Protection Agency (Parts 1—799)

V Council on Environmental Quality (Parts 1500—1599)

Title 41—Public Contracts and Property Management

SUBTITLE B—Other Provisions Relating to Public Contracts

50 Public Contracts, Department of Labor (Parts 50–1—50–999)

51 Committee for Purchase From People Who Are Blind or Severely Disabled (Parts 51–1—51–99)

60 Office of Federal Contract Compliance Programs, Equal Employment Opportunity, Department of Labor (Parts 60–1—60–999)

61 Office of the Assistant Secretary for Veterans Employment and Training, Department of Labor (Parts 61–1—61–999)

Title 41—Public Contracts and Property Management—Continued

Chap.

SUBTITLE C—Federal Property Management Regulations System

101 Federal Property Management Regulations (Parts 101–1—101–99)

105 General Services Administration (Parts 105–1—105–999)

109 Department of Energy Property Management Regulations (Parts 109–1—109–99)

114 Department of the Interior (Parts 114–1—114–99)

115 Environmental Protection Agency (Parts 115–1—115–99)

128 Department of Justice (Parts 128–1—128–99)

SUBTITLE D—Other Provisions Relating to Property Management [Reserved]

SUBTITLE E—Federal Information Resources Management Regulations System

201 Federal Information Resources Management Regulation (Parts 201–1—201–99) [Reserved]

SUBTITLE F—Federal Travel Regulation System

300 General

301 Temporary Duty (TDY) Travel Allowances (Parts 301–1—301–99)

302 Relocation Allowances (Parts 302–1—302–99)

303 Payment of Expenses Connected with the Death of Certain Employees (Parts 303–1—303–2)

304 Payment from a Non-Federal Source for Travel Expenses (Parts 304–1—304–99)

Title 42—Public Health

I Public Health Service, Department of Health and Human Services (Parts 1—199)

IV Health Care Financing Administration, Department of Health and Human Services (Parts 400—499)

V Office of Inspector General-Health Care, Department of Health and Human Services (Parts 1000—1999)

Title 43—Public Lands: Interior

SUBTITLE A—Office of the Secretary of the Interior (Parts 1—199)

SUBTITLE B—Regulations Relating to Public Lands

I Bureau of Reclamation, Department of the Interior (Parts 200—499)

II Bureau of Land Management, Department of the Interior (Parts 1000—9999)

III Utah Reclamation Mitigation and Conservation Commission (Parts 10000—10005)

Title 44—Emergency Management and Assistance

I Federal Emergency Management Agency (Parts 0—399)

IV Department of Commerce and Department of Transportation (Parts 400—499)

Title 45—Public Welfare

Chap.

SUBTITLE A—Department of Health and Human Services (Parts 1—199)

SUBTITLE B—Regulations Relating to Public Welfare

II Office of Family Assistance (Assistance Programs), Administration for Children and Families, Department of Health and Human Services (Parts 200—299)

III Office of Child Support Enforcement (Child Support Enforcement Program), Administration for Children and Families, Department of Health and Human Services (Parts 300—399)

IV Office of Refugee Resettlement, Administration for Children and Families, Department of Health and Human Services (Parts 400—499)

V Foreign Claims Settlement Commission of the United States, Department of Justice (Parts 500—599)

VI National Science Foundation (Parts 600—699)

VII Commission on Civil Rights (Parts 700—799)

VIII Office of Personnel Management (Parts 800—899)

X Office of Community Services, Administration for Children and Families, Department of Health and Human Services (Parts 1000—1099)

XI National Foundation on the Arts and the Humanities (Parts 1100—1199)

XII Corporation for National and Community Service (Parts 1200—1299)

XIII Office of Human Development Services, Department of Health and Human Services (Parts 1300—1399)

XVI Legal Services Corporation (Parts 1600—1699)

XVII National Commission on Libraries and Information Science (Parts 1700—1799)

XVIII Harry S. Truman Scholarship Foundation (Parts 1800—1899)

XXI Commission on Fine Arts (Parts 2100—2199)

XXII Christopher Columbus Quincentenary Jubilee Commission (Parts 2200—2299)

XXIII Arctic Research Commission (Part 2301)

XXIV James Madison Memorial Fellowship Foundation (Parts 2400—2499)

XXV Corporation for National and Community Service (Parts 2500—2599)

Title 46—Shipping

I Coast Guard, Department of Transportation (Parts 1—199)

II Maritime Administration, Department of Transportation (Parts 200—399)

III Coast Guard (Great Lakes Pilotage), Department of Transportation (Parts 400—499)

IV Federal Maritime Commission (Parts 500—599)

Title 47—Telecommunication

Chap.

I Federal Communications Commission (Parts 0—199)

II Office of Science and Technology Policy and National Security Council (Parts 200—299)

III National Telecommunications and Information Administration, Department of Commerce (Parts 300—399)

Title 48—Federal Acquisition Regulations System

1 Federal Acquisition Regulation (Parts 1—99)

2 Department of Defense (Parts 200—299)

3 Department of Health and Human Services (Parts 300—399)

4 Department of Agriculture (Parts 400—499)

5 General Services Administration (Parts 500—599)

6 Department of State (Parts 600—699)

7 United States Agency for International Development (Parts 700—799)

8 Department of Veterans Affairs (Parts 800—899)

9 Department of Energy (Parts 900—999)

10 Department of the Treasury (Parts 1000—1099)

12 Department of Transportation (Parts 1200—1299)

13 Department of Commerce (Parts 1300—1399)

14 Department of the Interior (Parts 1400—1499)

15 Environmental Protection Agency (Parts 1500—1599)

16 Office of Personnel Management Federal Employees Health Benefits Acquisition Regulation (Parts 1600—1699)

17 Office of Personnel Management (Parts 1700—1799)

18 National Aeronautics and Space Administration (Parts 1800—1899)

19 United States Information Agency (Parts 1900—1999)

20 Nuclear Regulatory Commission (Parts 2000—2099)

21 Office of Personnel Management, Federal Employees Group Life Insurance Federal Acquisition Regulation (Parts 2100—2199)

23 Social Security Administration (Parts 2300—2399)

24 Department of Housing and Urban Development (Parts 2400—2499)

25 National Science Foundation (Parts 2500—2599)

28 Department of Justice (Parts 2800—2899)

29 Department of Labor (Parts 2900—2999)

34 Department of Education Acquisition Regulation (Parts 3400—3499)

35 Panama Canal Commission (Parts 3500—3599)

44 Federal Emergency Management Agency (Parts 4400—4499)

51 Department of the Army Acquisition Regulations (Parts 5100—5199)

52 Department of the Navy Acquisition Regulations (Parts 5200—5299)

Chap.

53 Department of the Air Force Federal Acquisition Regulation Supplement (Parts 5300—5399)

54 Defense Logistics Agency, Department of Defense (Part 5452)

57 African Development Foundation (Parts 5700—5799)

61 General Services Administration Board of Contract Appeals (Parts 6100—6199)

63 Department of Transportation Board of Contract Appeals (Parts 6300—6399)

99 Cost Accounting Standards Board, Office of Federal Procurement Policy, Office of Management and Budget (Parts 9900—9999)

Title 49—Transportation

SUBTITLE A—Office of the Secretary of Transportation (Parts 1—99)

SUBTITLE B—Other Regulations Relating to Transportation

I Research and Special Programs Administration, Department of Transportation (Parts 100—199)

II Federal Railroad Administration, Department of Transportation (Parts 200—299)

III Federal Highway Administration, Department of Transportation (Parts 300—399)

IV Coast Guard, Department of Transportation (Parts 400—499)

V National Highway Traffic Safety Administration, Department of Transportation (Parts 500—599)

VI Federal Transit Administration, Department of Transportation (Parts 600—699)

VII National Railroad Passenger Corporation (AMTRAK) (Parts 700—799)

VIII National Transportation Safety Board (Parts 800—999)

X Surface Transportation Board, Department of Transportation (Parts 1000—1399)

Title 50—Wildlife and Fisheries

I United States Fish and Wildlife Service, Department of the Interior (Parts 1—199)

II National Marine Fisheries Service, National Oceanic and Atmospheric Administration, Department of Commerce (Parts 200—299)

III International Fishing and Related Activities (Parts 300—399)

IV Joint Regulations (United States Fish and Wildlife Service, Department of the Interior and National Marine Fisheries Service, National Oceanic and Atmospheric Administration, Department of Commerce); Endangered Species Committee Regulations (Parts 400—499)

V Marine Mammal Commission (Parts 500—599)

Title 50—Wildlife and Fisheries—Continued

Chap.

VI Fishery Conservation and Management, National Oceanic and Atmospheric Administration, Department of Commerce (Parts 600—699)

CFR Index and Finding Aids

Subject/Agency Index

List of Agency Prepared Indexes

Parallel Tables of Statutory Authorities and Rules

List of CFR Titles, Chapters, Subchapters, and Parts

Alphabetical List of Agencies Appearing in the CFR

Alphabetical List of Agencies Appearing in the CFR

(Revised as of June 29, 1998)

Agency	CFR Title, Subtitle or Chapter
Administrative Committee of the Federal Register	1, I
Advanced Research Projects Agency	32, I
Advisory Commission on Intergovernmental Relations	5, VII
Advisory Committee on Federal Pay	5, IV
Advisory Council on Historic Preservation	36, VIII
African Development Foundation	22, XV
Federal Acquisition Regulation	48, 57
Agency for International Development, United States	22, II
Federal Acquisition Regulation	48, 7
Agricultural Marketing Service	7, I, IX, X, XI
Agricultural Research Service	7, V
Agriculture Department	
Agricultural Marketing Service	7, I, IX, X, XI
Agricultural Research Service	7, V
Animal and Plant Health Inspection Service	7, III; 9, I
Chief Financial Officer, Office of	7, XXX
Commodity Credit Corporation	7, XIV
Cooperative State Research, Education, and Extension Service	7, XXXIV
Economic Research Service	7, XXXVII
Energy, Office of	7, XXIX
Environmental Quality, Office of	7, XXXI
Farm Service Agency	7, VII, XVIII
Federal Acquisition Regulation	48, 4
Federal Crop Insurance Corporation	7, IV
Food and Nutrition Service	7, II
Food Safety and Inspection Service	9, III
Foreign Agricultural Service	7, XV
Forest Service	36, II
Grain Inspection, Packers and Stockyards Administration	7, VIII; 9, II
Information Resources Management, Office of	7, XXVII
Inspector General, Office of	7, XXVI
National Agricultural Library	7, XLI
National Agricultural Statistics Service	7, XXXVI
Natural Resources Conservation Service	7, VI
Operations, Office of	7, XXVIII
Rural Business-Cooperative Service	7, XVIII, XLII
Rural Development Administration	7, XLII
Rural Housing Service	7, XVIII, XXXV
Rural Telephone Bank	7, XVI
Rural Utilities Service	7, XVII, XVIII, XLII
Secretary of Agriculture, Office of	7, Subtitle A
Transportation, Office of	7, XXXIII
World Agricultural Outlook Board	7, XXXVIII
Air Force Department	32, VII
Federal Acquisition Regulation Supplement	48, 53
Alcohol, Tobacco and Firearms, Bureau of	27, I
AMTRAK	49, VII
American Battle Monuments Commission	36, IV
American Indians, Office of the Special Trustee	25, VII
Animal and Plant Health Inspection Service	7, III; 9, I
Appalachian Regional Commission	5, IX
Architectural and Transportation Barriers Compliance Board	36, XI

Agency	CFR Title, Subtitle or Chapter
Arctic Research Commission	45, XXIII
Armed Forces Retirement Home	5, XI
Arms Control and Disarmament Agency, United States	22, VI
Army Department	32, V
Engineers, Corps of	33, II; 36, III
Federal Acquisition Regulation	48, 51
Assassination Records Review Board	36, XIV
Benefits Review Board	20, VII
Bilingual Education and Minority Languages Affairs, Office of	34, V
Blind or Severely Disabled, Committee for Purchase From People Who Are	41, 51
Board for International Broadcasting	22, XIII
Census Bureau	15, I
Central Intelligence Agency	32, XIX
Chief Financial Officer, Office of	7, XXX
Child Support Enforcement, Office of	45, III
Children and Families, Administration for	45, II, III, IV, X
Christopher Columbus Quincentenary Jubilee Commission	45, XXII
Civil Rights, Commission on	45, VII
Civil Rights, Office for	34, I
Coast Guard	33, I; 46, I; 49, IV
Coast Guard (Great Lakes Pilotage)	46, III
Commerce Department	44, IV
Census Bureau	15, I‘
Economic Affairs, Under Secretary	37, V
Economic Analysis, Bureau of	15, VIII
Economic Development Administration	13, III
Emergency Management and Assistance	44, IV
Export Administration, Bureau of	15, VII
Federal Acquisition Regulation	48, 13
Fishery Conservation and Management	50, VI
Foreign-Trade Zones Board	15, IV
International Trade Administration	15, III; 19, III
National Institute of Standards and Technology	15, II
National Marine Fisheries Service	50, II, IV
National Oceanic and Atmospheric Administration	15, IX; 50, II, III, IV, VI
National Telecommunications and Information Administration	15, XXIII; 47, III
National Weather Service	15, IX
Patent and Trademark Office	37, I
Productivity, Technology and Innovation, Assistant Secretary for	37, IV
Secretary of Commerce, Office of	15, Subtitle A
Technology, Under Secretary for	37, V
Technology Administration	15, XI
Technology Policy, Assistant Secretary for	37, IV
Commercial Space Transportation	14, III
Commodity Credit Corporation	7, XIV
Commodity Futures Trading Commission	5, XLI; 17, I
Community Planning and Development, Office of Assistant Secretary for	24, V, VI
Community Services, Office of	45, X
Comptroller of the Currency	12, I
Construction Industry Collective Bargaining Commission	29, IX
Consumer Product Safety Commission	5, LXXI; 16, II
Cooperative State Research, Education, and Extension Service	7, XXXIV
Copyright Office	37, II
Corporation for National and Community Service	45, XII, XXV
Cost Accounting Standards Board	48, 99
Council on Environmental Quality	40, V
Customs Service, United States	19, I
Defense Contract Audit Agency	32, I
Defense Department	5, XXVI; 32, Subtitle A
Advanced Research Projects Agency	32, I
Air Force Department	32, VII

Agency	CFR Title, Subtitle or Chapter
Army Department	32, V; 33, II; 36, III, 48, 51
Defense Intelligence Agency	32, I
Defense Logistics Agency	32, I, XII; 48, 54
Engineers, Corps of	33, II; 36, III
Federal Acquisition Regulation	48, 2
National Imagery and Mapping Agency	32, I
Navy Department	32, VI; 48, 52
Secretary of Defense, Office of	32, I
Defense Contract Audit Agency	32, I
Defense Intelligence Agency	32, I
Defense Logistics Agency	32, XII; 48, 54
Defense Nuclear Facilities Safety Board	10, XVII
Delaware River Basin Commission	18, III
Drug Enforcement Administration	21, II
East-West Foreign Trade Board	15, XIII
Economic Affairs, Under Secretary	37, V
Economic Analysis, Bureau of	15, VIII
Economic Development Administration	13, III
Economic Research Service	7, XXXVII
Education, Department of	5, LIII
Bilingual Education and Minority Languages Affairs, Office of	34, V
Civil Rights, Office for	34, I
Educational Research and Improvement, Office of	34, VII
Elementary and Secondary Education, Office of	34, II
Federal Acquisition Regulation	48, 34
Postsecondary Education, Office of	34, VI
Secretary of Education, Office of	34, Subtitle A
Special Education and Rehabilitative Services, Office of	34, III
Vocational and Adult Education, Office of	34, IV
Educational Research and Improvement, Office of	34, VII
Elementary and Secondary Education, Office of	34, II
Employees' Compensation Appeals Board	20, IV
Employees Loyalty Board	5, V
Employment and Training Administration	20, V
Employment Standards Administration	20, VI
Endangered Species Committee	50, IV
Energy, Department of	5, XXIII; 10, II, III, X
Federal Acquisition Regulation	48, 9
Federal Energy Regulatory Commission	5, XXIV; 18, I
Property Management Regulations	41, 109
Energy, Office of	7, XXIX
Engineers, Corps of	33, II; 36, III
Engraving and Printing, Bureau of	31, VI
Enrichment Corporation, United States	10, XI
Environmental Protection Agency	5, LIV; 40, I
Federal Acquisition Regulation	48, 15
Property Management Regulations	41, 115
Environmental Quality, Office of	7, XXXI
Equal Employment Opportunity Commission	5, LXII; 29, XIV
Equal Opportunity, Office of Assistant Secretary for	24, I
Executive Office of the President	3, I
Administration, Office of	5, XV
Environmental Quality, Council on	40, V
Management and Budget, Office of	25, III, LXXVII; 48, 99
National Drug Control Policy, Office of	21, III
National Security Council	32, XXI; 47, 2
Presidential Documents	3
Science and Technology Policy, Office of	32, XXIV; 47, II
Trade Representative, Office of the United States	15, XX
Export Administration, Bureau of	15, VII
Export-Import Bank of the United States	5, LII; 12, IV
Family Assistance, Office of	45, II
Farm Credit Administration	5, XXXI; 12, VI
Farm Credit System Insurance Corporation	5, XXX; 12, XIV
Farm Service Agency	7, VII, XVIII

Agency	CFR Title, Subtitle or Chapter
Federal Acquisition Regulation	48, 1
Federal Aviation Administration	14, I
Commercial Space Transportation	14, III
Federal Claims Collection Standards	4, II
Federal Communications Commission	5, XXIX; 47, I
Federal Contract Compliance Programs, Office of	41, 60
Federal Crop Insurance Corporation	7, IV
Federal Deposit Insurance Corporation	5, XXII; 12, III
Federal Election Commission	11, I
Federal Emergency Management Agency	44, I
Federal Acquisition Regulation	48, 44
Federal Employees Group Life Insurance Federal Acquisition Regulation	48, 21
Federal Employees Health Benefits Acquisition Regulation	48, 16
Federal Energy Regulatory Commission	5, XXIV; 18, I
Federal Financial Institutions Examination Council	12, XI
Federal Financing Bank	12, VIII
Federal Highway Administration	23, I, II; 49, III
Federal Home Loan Mortgage Corporation	1, IV
Federal Housing Enterprise Oversight Office	12, XVII
Federal Housing Finance Board	12, IX
Federal Labor Relations Authority, and General Counsel of the Federal Labor Relations Authority	5, XIV; 22, XIV
Federal Law Enforcement Training Center	31, VII
Federal Maritime Commission	46, IV
Federal Mediation and Conciliation Service	29, XII
Federal Mine Safety and Health Review Commission	5, LXXIV; 29, XXVII
Federal Pay, Advisory Committee on	5, IV
Federal Prison Industries, Inc.	28, III
Federal Procurement Policy Office	48, 99
Federal Property Management Regulations	41, 101
Federal Property Management Regulations System	41, Subtitle C
Federal Railroad Administration	49, II
Federal Register, Administrative Committee of	1, I
Federal Register, Office of	1, II
Federal Reserve System	12, II
Board of Governors	5, LVIII
Federal Retirement Thrift Investment Board	5, VI, LXXVI
Federal Service Impasses Panel	5, XIV
Federal Trade Commission	5, XLVII; 16, I
Federal Transit Administration	49, VI
Federal Travel Regulation System	41, Subtitle F
Fine Arts, Commission on	45, XXI
Fiscal Service	31, II
Fish and Wildlife Service, United States	50, I, IV
Fishery Conservation and Management	50, VI
Food and Drug Administration	21, I
Food and Nutrition Service	7, II
Food Safety and Inspection Service	9, III
Foreign Agricultural Service	7, XV
Foreign Assets Control, Office of	31, V
Foreign Claims Settlement Commission of the United States	45, V
Foreign Service Grievance Board	22, IX
Foreign Service Impasse Disputes Panel	22, XIV
Foreign Service Labor Relations Board	22, XIV
Foreign-Trade Zones Board	15, IV
Forest Service	36, II
General Accounting Office	4, I, II
General Services Administration	5, LVII
Contract Appeals, Board of	48, 61
Federal Acquisition Regulation	48, 5
Federal Property Management Regulations System	41, 101, 105
Federal Travel Regulation System	41, Subtitle F
General	41, 300
Payment From a Non-Federal Source for Travel Expenses	41, 304
Payment of Expenses Connected With the Death of Certain Employees	41, 303

Agency	CFR Title, Subtitle or Chapter
Relocation Allowances	41, 302
Temporary Duty (TDY) Travel Allowances	41, 301
Geological Survey	30, IV
Government Ethics, Office of	5, XVI
Government National Mortgage Association	24, III
Grain Inspection, Packers and Stockyards Administration	7, VIII; 9, II
Great Lakes Pilotage	46, III
Harry S. Truman Scholarship Foundation	45, XVIII
Health and Human Services, Department of	5, XLV; 45, Subtitle A
Child Support Enforcement, Office of	45, III
Children and Families, Administration for	45, II, III, IV, X
Community Services, Office of	45, X
Family Assistance, Office of	45, II
Federal Acquisition Regulation	48, 3
Food and Drug Administration	21, I
Health Care Financing Administration	42, IV
Human Development Services, Office of	45, XIII
Indian Health Service	25, V
Inspector General (Health Care), Office of	42, V
Public Health Service	42, I
Refugee Resettlement, Office of	45, IV
Health Care Financing Administration	42, IV
Housing and Urban Development, Department of	5, LXV; 24, Subtitle B
Community Planning and Development, Office of Assistant Secretary for	24, V, VI
Equal Opportunity, Office of Assistant Secretary for	24, I
Federal Acquisition Regulation	48, 24
Federal Housing Enterprise Oversight, Office of	12, XVII
Government National Mortgage Association	24, III
Housing—Federal Housing Commissioner, Office of Assistant Secretary for	24, II, VIII, X, XX
Inspector General, Office of	24, XII
Public and Indian Housing, Office of Assistant Secretary for	24, IX
Secretary, Office of	24, Subtitle A, VII
Housing—Federal Housing Commissioner, Office of Assistant Secretary for	24, II, VIII, X, XX
Human Development Services, Office of	45, XIII
Immigration and Naturalization Service	8, I
Independent Counsel, Office of	28, VII
Indian Affairs, Bureau of	25, I, V
Indian Affairs, Office of the Assistant Secretary	25, VI
Indian Arts and Crafts Board	25, II
Indian Health Service	25, V
Information Agency, United States	22, V
Federal Acquisition Regulation	48, 19
Information Resources Management, Office of	7, XXVII
Information Security Oversight Office, National Archives and Records Administration	32, XX
Inspector General	
Agriculture Department	7, XXVI
Health and Human Services Department	42, V
Housing and Urban Development Department	24, XII
Institute of Peace, United States	22, XVII
Inter-American Foundation	5, LXIII; 22, X
Intergovernmental Relations, Advisory Commission on	5, VII
Interior Department	
American Indians, Office of the Special Trustee	25, VII
Endangered Species Committee	50, IV
Federal Acquisition Regulation	48, 14
Federal Property Management Regulations System	41, 114
Fish and Wildlife Service, United States	50, I, IV
Geological Survey	30, IV
Indian Affairs, Bureau of	25, I, V
Indian Affairs, Office of the Assistant Secretary	25, VI
Indian Arts and Crafts Board	25, II
Land Management, Bureau of	43, II
Minerals Management Service	30, II

Agency	CFR Title, Subtitle or Chapter
Mines, Bureau of	30, VI
National Indian Gaming Commission	25, III
National Park Service	36, I
Reclamation, Bureau of	43, I
Secretary of the Interior, Office of	43, Subtitle A
Surface Mining and Reclamation Appeals, Board of	30, III
Surface Mining Reclamation and Enforcement, Office of	30, VII
Internal Revenue Service	26, I
International Boundary and Water Commission, United States and Mexico, United States Section	22, XI
International Development, United States Agency for	22, II
Federal Acquisition Regulation	48, 7
International Development Cooperation Agency, United States	22, XII
International Development, United States Agency for	22, II; 48, 7
Overseas Private Investment Corporation	5, XXXIII; 22, VII
International Fishing and Related Activities	50, III
International Investment, Office of	31, VIII
International Joint Commission, United States and Canada	22, IV
International Organizations Employees Loyalty Board	5, V
International Trade Administration	15, III; 19, III
International Trade Commission, United States	19, II
Interstate Commerce Commission	5, XL
James Madison Memorial Fellowship Foundation	45, XXIV
Japan–United States Friendship Commission	22, XVI
Joint Board for the Enrollment of Actuaries	20, VIII
Justice Department	5, XXVIII; 28, I
Drug Enforcement Administration	21, II
Federal Acquisition Regulation	48, 28
Federal Claims Collection Standards	4, II
Federal Prison Industries, Inc.	28, III
Foreign Claims Settlement Commission of the United States	45, V
Immigration and Naturalization Service	8, I
Offices of Independent Counsel	28, VI
Prisons, Bureau of	28, V
Property Management Regulations	41, 128
Labor Department	5, XLII
Benefits Review Board	20, VII
Employees' Compensation Appeals Board	20, IV
Employment and Training Administration	20, V
Employment Standards Administration	20, VI
Federal Acquisition Regulation	48, 29
Federal Contract Compliance Programs, Office of	41, 60
Federal Procurement Regulations System	41, 50
Labor-Management Standards, Office of	29, II, IV
Mine Safety and Health Administration	30, I
Occupational Safety and Health Administration	29, XVII
Pension and Welfare Benefits Administration	29, XXV
Public Contracts	41, 50
Secretary of Labor, Office of	29, Subtitle A
Veterans' Employment and Training, Office of the Assistant Secretary for	41, 61; 20, IX
Wage and Hour Division	29, V
Workers' Compensation Programs, Office of	20, I
Labor-Management Standards, Office of	29, II, IV
Land Management, Bureau of	43, II
Legal Services Corporation	45, XVI
Library of Congress	36, VII
Copyright Office	37, II
Management and Budget, Office of	5, III, LXXVII; 48, 99
Marine Mammal Commission	50, V
Maritime Administration	46, II
Merit Systems Protection Board	5, II
Micronesian Status Negotiations, Office for	32, XXVII
Mine Safety and Health Administration	30, I
Minerals Management Service	30, II

Agency	CFR Title, Subtitle or Chapter
Mines, Bureau of	30, VI
Minority Business Development Agency	15, XIV
Miscellaneous Agencies	1, IV
Monetary Offices	31, I
National Aeronautics and Space Administration	5, LIX; 14, V
Federal Acquisition Regulation	48, 18
National Agricultural Library	7, XLI
National Agricultural Statistics Service	7, XXXVI
National Archives and Records Administration	5, LXVI; 36, XII
Information Security Oversight Office	32, XX
National Bureau of Standards	15, II
National Capital Planning Commission	1, IV
National Commission for Employment Policy	1, IV
National Commission on Libraries and Information Science	45, XVII
National and Community Service, Corporation for	45, XII, XXV
National Council on Disability	34, XII
National Credit Union Administration	12, VII
National Drug Control Policy, Office of	21, III
National Foundation on the Arts and the Humanities	45, XI
National Highway Traffic Safety Administration	23, II, III; 49, V
National Imagery and Mapping Agency	32, I
National Indian Gaming Commission	25, III
National Institute for Literacy	34, XI
National Institute of Standards and Technology	15, II
National Labor Relations Board	5, LXI; 29, I
National Marine Fisheries Service	50, II, IV
National Mediation Board	29, X
National Oceanic and Atmospheric Administration	15, IX; 50, II, III, IV, VI
National Park Service	36, I
National Railroad Adjustment Board	29, III
National Railroad Passenger Corporation (AMTRAK)	49, VII
National Science Foundation	5, XLIII; 45, VI
Federal Acquisition Regulation	48, 25
National Security Council	32, XXI
National Security Council and Office of Science and Technology Policy	47, II
National Telecommunications and Information Administration	15, XXIII; 47, III
National Transportation Safety Board	49, VIII
National Weather Service	15, IX
Natural Resources Conservation Service	7, VI
Navajo and Hopi Indian Relocation, Office of	25, IV
Navy Department	32, VI
Federal Acquisition Regulation	48, 52
Neighborhood Reinvestment Corporation	24, XXV
Northeast Dairy Compact Commission	7, XIII
Nuclear Regulatory Commission	5, XLVIII; 10, I
Federal Acquisition Regulation	48, 20
Occupational Safety and Health Administration	29, XVII
Occupational Safety and Health Review Commission	29, XX
Offices of Independent Counsel	28, VI
Operations Office	7, XXVIII
Overseas Private Investment Corporation	5, XXXIII; 22, VII
Panama Canal Commission	48, 35
Panama Canal Regulations	35, I
Patent and Trademark Office	37, I
Payment From a Non-Federal Source for Travel Expenses	41, 304
Payment of Expenses Connected With the Death of Certain Employees	41, 303
Peace Corps	22, III
Pennsylvania Avenue Development Corporation	36, IX
Pension and Welfare Benefits Administration	29, XXV
Pension Benefit Guaranty Corporation	29, XL
Personnel Management, Office of	5, I, XXXV; 45, VIII
Federal Acquisition Regulation	48, 17
Federal Employees Group Life Insurance Federal Acquisition Regulation	48, 21

Agency	CFR Title, Subtitle or Chapter
Federal Employees Health Benefits Acquisition Regulation	48, 16
Postal Rate Commission	5, XLVI; 39, III
Postal Service, United States	5, LX; 39, I
Postsecondary Education, Office of	34, VI
President's Commission on White House Fellowships	1, IV
Presidential Commission on the Assignment of Women in the Armed Forces	32, XXIX
Presidential Documents	3
Prisons, Bureau of	28, V
Productivity, Technology and Innovation, Assistant Secretary	37, IV
Public Contracts, Department of Labor	41, 50
Public and Indian Housing, Office of Assistant Secretary for	24, IX
Public Health Service	42, I
Railroad Retirement Board	20, II
Reclamation, Bureau of	43, I
Refugee Resettlement, Office of	45, IV
Regional Action Planning Commissions	13, V
Relocation Allowances	41, 302
Research and Special Programs Administration	49, I
Rural Business-Cooperative Service	7, XVIII, XLII
Rural Development Administration	7, XLII
Rural Housing Service	7, XVIII, XXXV
Rural Telephone Bank	7, XVI
Rural Utilities Service	7, XVII, XVIII, XLII
Saint Lawrence Seaway Development Corporation	33, IV
Science and Technology Policy, Office of	32, XXIV
Science and Technology Policy, Office of, and National Security Council	47, II
Secret Service	31, IV
Securities and Exchange Commission	17, II
Selective Service System	32, XVI
Small Business Administration	13, I
Smithsonian Institution	36, V
Social Security Administration	20, III; 48, 23
Soldiers' and Airmen's Home, United States	5, XI
Special Counsel, Office of	5, VIII
Special Education and Rehabilitative Services, Office of	34, III
State Department	22, I
Federal Acquisition Regulation	48, 6
Surface Mining and Reclamation Appeals, Board of	30, III
Surface Mining Reclamation and Enforcement, Office of	30, VII
Surface Transportation Board	49, X
Susquehanna River Basin Commission	18, VIII
Technology Administration	15, XI
Technology Policy, Assistant Secretary for	37, IV
Technology, Under Secretary for	37, V
Tennessee Valley Authority	5, LXIX; 18, XIII
Thrift Depositor Protection Oversight Board	12, XV
Thrift Supervision Office, Department of the Treasury	12, V
Trade Representative, United States, Office of	15, XX
Transportation, Department of	5, L
Coast Guard	33, I; 46, I; 49, IV
Coast Guard (Great Lakes Pilotage)	46, III
Commercial Space Transportation	14, III
Contract Appeals, Board of	48, 63
Emergency Management and Assistance	44, IV
Federal Acquisition Regulation	48, 12
Federal Aviation Administration	14, I
Federal Highway Administration	23, I, II; 49, III
Federal Railroad Administration	49, II
Federal Transit Administration	49, VI
Maritime Administration	46, II
National Highway Traffic Safety Administration	23, II, III; 49, V
Research and Special Programs Administration	49, I
Saint Lawrence Seaway Development Corporation	33, IV
Secretary of Transportation, Office of	14, II; 49, Subtitle A

Agency	CFR Title, Subtitle or Chapter
Surface Transportation Board	49, X
Transportation, Office of	7, XXXIII
Temporary Duty (TDY) Travel Allowances	41, 301
Treasury Department	5, XXI; 17, IV
Alcohol, Tobacco and Firearms, Bureau of	27, I
Community Development Financial Institutions Fund	12, XVIII
Comptroller of the Currency	12, I
Customs Service, United States	19, I
Engraving and Printing, Bureau of	31, VI
Federal Acquisition Regulation	48, 10
Federal Law Enforcement Training Center	31, VII
Fiscal Service	31, II
Foreign Assets Control, Office of	31, V
Internal Revenue Service	26, I
International Investment, Office of	31, VIII
Monetary Offices	31, I
Secret Service	31, IV
Secretary of the Treasury, Office of	31, Subtitle A
Thrift Supervision, Office of	12, V
Truman, Harry S., Scholarship Foundation	45, XVIII
United States and Canada, International Joint Commission	22, IV
United States and Mexico, International Boundary and Water Commission, United States Section	22, XI
United States Enrichment Corporation	10, XI
Utah Reclamation Mitigation and Conservation Commission	43, III
Veterans Affairs Department	38, I
Federal Acquisition Regulation	48, 8
Veterans' Employment and Training, Office of the Assistant Secretary for	41, 61; 20, IX
Vice President of the United States, Office of	32, XXVIII
Vocational and Adult Education, Office of	34, IV
Wage and Hour Division	29, V
Water Resources Council	18, VI
Workers' Compensation Programs, Office of	20, I
World Agricultural Outlook Board	7, XXXVIII

Table of OMB Control Numbers

The OMB control numbers for chapter I of title 40 were consolidated into §9.1 at 58 FR 27472, May 10, 1993. Section 9.1 is reprinted below for the convenience of the user.

PART 9—OMB APPROVALS UNDER THE PAPERWORK REDUCTION ACT

AUTHORITY: 7 U.S.C. 135 *et seq.*, 136–136y; 15 U.S.C. 2001, 2003, 2005, 2006, 2601–2671; 21 U.S.C. 331j, 346a, 348; 31 U.S.C. 9701; 33 U.S.C. 1251 *et seq.*, 1311, 1313d, 1314, 1318, 1321, 1326, 1330, 1342, 1344, 1345 (d) and (e), 1361; E.O. 11735, 38 FR 21243, 3 CFR, 1971–1975 Comp. p. 973; 42 U.S.C. 241, 242b, 243, 246, 300f, 300g, 300g–1, 300g–2, 300g–3, 300g–4, 300g–5, 300g–6, 300j–1, 300j–2, 300j–3, 300j–4, 300j–9, 1857 *et seq.*, 6901–6992k, 7401–7671q, 7542, 9601–9657, 11023, 11048.

§9.1 OMB approvals under the Paperwork Reduction Act.

This part consolidates the display of control numbers assigned to collections of information in certain EPA regulations by the Office of Management and Budget (OMB) under the Paperwork Reduction Act (PRA). This part fulfills the requirements of section 3507(f) of the PRA.

40 CFR citation	OMB control No.
Public Information	
Part 2, subpart B	2050–0143
Environmental Impact Assessment of Nongovernmental Activities in Antarctica	
8.5–8.10	2020–0007
General Regulation for Assistance Programs for Other than State and Local Governments	
30.400	2030–0020
30.500	2030–0020
30.501	2030–0020
30.503	2030–0020
30.505	2030–0020
30.510	2030–0020
30.520	2030–0020
30.530	2030–0020
30.531	2030–0020
30.532	2030–0020
30.535	2030–0020
30.1002	2030–0020
30.1003	2030–0020
30.1200	2030–0020
Uniform Administrative Requirements for Grants and Cooperative Agreements to State and Local Governments	
31.10	2030–0020
31.20–31.21	2030–0020
31.31–31.32	2030–0020
31.36(g)–31.36(h)	2030–0020
31.40	2030–0020
31.42	2030–0020
31.6	2030–0020
Procurement Under Assistance Agreements	
33.110	2030–0003
33.211	2030–0003
State and Local Assistance	
35.2015	2040–0027
35.2025	2040–0027
35.2034	2040–0027
35.2040	2040–0027
35.2105–35.2107	2040–0027
35.2110	2040–0027
35.2114	2040–0027
35.2118	2040–0027
35.2120	2040–0027
35.2127	2040–0027
35.2130	2040–0027
35.2140	2040–0027
35.2211–35.2212	2040–0027
35.2215–35.2216	2040–0027
35.2218	2040–0027
35.3010	2040–0095
35.3030	2040–0095
35.3130	2040–0118
35.3135	2040–0118
35.3140	2040–0118
35.3145	2040–0118
35.3150	2040–0118
35.3155	2040–0118
35.3160	2040–0118
35.3165	2040–0118
35.3170	2040–0118
35.6055(a)(2)	2010–0020
35.6055(b)(1)	2010–0020
35.6055(b)(2)(i)–(ii)	2010–0020
35.6105(a)(2)(i)–(v), (vii)	2010–0020
35.6110(b)(2)	2010–0020
35.6120	2010–0020
35.6145	2010–0020
35.6155(a), (c)	2010–0020
35.6230(a), (c)	2010–0020
35.6300(a)(3)	2010–0020
35.6315(c)	2010–0020
35.6320	2010–0020
35.6340(a)	2010–0020

40 CFR citation	OMB control No.
35.6350	2010–0020
35.6500	2010–0020
35.6550(a)(1)(ii)	2010–0020
35.6550(b)(1)(iii)	2010–0020
35.6550(b)(2)(i)	2010–0020
35.6585	2010–0020
35.6595(a)	2010–0020
35.6600(a)	2010–0020
35.6650	2010–0020
35.6655	2010–0020
35.6660	2010–0020
35.6665(a)	2010–0020
35.6700	2010–0020
35.6705	2010–0020
35.6710	2010–0020
35.6805	2010–0020
35.6815(a), (d), (e)	2010–0020
35.9000–35.9070	2040–0138
Indian Tribes: Air Quality Planning and Management	
49.6	2060–0306
49.7	2060–0306
Requirements for Preparation, Adoption, and Submittal of Implementation Plans	
51.160–51.166	2060–0003
51.321–51.323	2060–0088
51.353–51.354	2060–0252
51.365–51.366	2060–0252
51.370–51.371	2060–0252
51.850–51.860	2060–0279
Approval and Promulgation of Implementation Plans	
52.21	2060–0003
52.741	2060–0203
Outer Continental Shelf Air Regulations	
55.4–55.8	2060–0249
55.11–55.14	2060–0249
Ambient Air Quality Surveillance	
58.11–58.14	2060–0084
58.20–58.23	2060–0084
58.25–58.28	2060–0084
58.30–58.31	2060–0084
58.33	2060–0084
58.35	2060–0084
58.40–58.41	2060–0084
58.43	2060–0084
58.45	2060–0084
58.50	2060–0084
Standards of Performance for New Stationary Sources [1]	
60.7(d)	2060–0207
60.45–60.47	2060–0026
60.46a–60.49a	2060–0023
60.40b	2060–0072
60.42b	2060–0072
60.44b–60.49b	2060–0072
60.42c	2060–0202
60.44c–60.48c	2060–0202
60.53–60.54	2060–0040
60.50a	2060–0210
60.56a–60.59a	2060–0210
60.63–60.65	2060–0025
60.73–60.74	2060–0019
60.84–60.85	2060–0041
60.93	2060–0083
60.104–60.108	2060–0022
60.113a–60.115a	2060–0121
60.113b–60.116b	2060–0074
60.123	2060–0080
60.133	2060–0110
60.142–60.144	2060–0029
60.143a–60.145a	2060–0029
60.153–60.155	2060–0035
60.192(b)	2060–0031
60.194–60.195	2060–0031
60.203–60.204	2060–0037
60.213–60.214	2060–0037
60.223–60.224	2060–0037
60.233–60.234	2060–0037
60.243–60.244	2060–0037
60.253–60.254	2060–0122
60.273–60.276	2060–0038
60.273a–60.276a	2060–0038
60.284–60.286	2060–0021
60.292–60.293	2060–0054
60.296	2060–0054
60.303	2060–0082
60.310	2060–0106
60.313–60.316	2060–0106
60.334–60.335	2060–0028
60.343–60.344	2060–0063
60.373–60.374	2060–0081
60.384–60.386	2060–0016
60.393–60.396	2060–0034
60.398	2060–0034
60.403–60.404	2060–0111
60.433–60.435	2060–0105
60.443–60.447	2060–0004
60.453–60.456	2060–0108
60.463–60.466	2060–0107
60.473–60.474	2060–0002
60.482–2	2060–0012
60.482–3	2060–0012
60.482–4	2060–0012
60.482–7	2060–0012
60.482–8	2060–0012
60.482–10	2060–0012
60.483–1	2060–0012
60.483–2	2060–0012
60.484–60.487	2060–0012
60.493–60.496	2060–0001
60.502–60.503	2060–0006
60.505	2060–0006
60.530–60.536	2060–0161
60.537(a)(1)–(2), (a)(4)–(5), (b)–(i)	2060–0161
60.538–60.539	2060–0161
60.543(b)(2)–(4), (c)–(n)	2060–0156
60.544	2060–0156
60.545(a)–(d), (f)	2060–0156
60.546(a)–(e), (f)(4)–(6), (g)–(j)	2060–0156
60.547	2060–0156
60.562–1	2060–0145
60.562–2	2060–0145
60.563–60.565	2060–0145
60.580	2060–0073
60.583–60.585	2060–0073
60.592–60.593	2060–0067
60.603–60.604	2060–0059
60.613–60.615	2060–0197
60.622	2060–0079
60.624–60.625	2060–0079
60.632–60.636	2060–0120
60.640	2060–0120
60.642–60.644	2060–0120
60.646–60.647	2060–0120
60.663–60.665	2060–0197
60.670	2060–0050
60.672	2060–0050

40 CFR citation	OMB control No.
60.674–60.676	2060–0050
60.683–60.685	2060–0114
60.692–1	2060–0172
60.692–2	2060–0172
60.692–3	2060–0172
60.692–4	2060–0172
60.692–5	2060–0172
60.693–1	2060–0172
60.693–2	2060–0172
60.695–60.698	2060–0172
60.703–60.705	2060–0269
60.710	2060–0171
60.713–60.717	2060–0171
60.722–60.725	2060–0162
60.734–60.736	2060–0251
60.740	2060–0181
60.743–60.747	2060–0181
National Emission Standards for Hazardous Air Pollutants [2]	
61.24–61.25	2060–0191
61.32–61.34	2060–0092
61.53–61.55	2060–0097
61.65(b)–(d)	2060–0071
61.67–61.71	2060–0071
61.93–61.95	2060–0191
61.103–61.105	2060–0191
61.107	2060–0191
61.123–61.124	2060–0191
61.126	2060–0191
61.132–61.133	2060–0185
61.135–61.139	2060–0185
61.142	2060–0101
61.144–61.147	2060–0101
61.149	2060–0101
61.150–61.155	2060–0101
61.163–61.165	2060–0043
61.203	2060–0191
61.206–61.209	2060–0191
61.223–61.224	2060–0191
61.242–1	2060–0068
61.242–2	2060–0068
61.242–3	2060–0068
61.242–4	2060–0068
61.242–7	2060–0068
61.242–8	2060–0068
61.242–10	2060–0068
61.242–11	2060–0068
61.243–1	2060–0068
61.243–2	2060–0068
61.244–61.247	2060–0068
61.253–61.255	2060–0191
61.271–61.276	2060–0185
61.300	2060–0182
61.302–61.305	2060–0182
61.342	2060–0183
61.344–61.349	2060–0183
61.354–61.357	2060–0183
National Emission Standards for Hazardous Air Pollutants for Source Categories [3]	
63.5(d)	2060–0330
63.52–63.56	2060–0266
63.72	2060–0222
63.74–63.79	2060–0222
63.91–63.96	2060–0264
63.103	2060–0282
63.105	2060–0282
63.117–63.118	2060–0282
63.122–63.123	2060–0282
63.129–63.130	2060–0282
63.146–63.148	2060–0282
63.151–63.152	2060–0282
63.181–63.182	2060–0282
63.302–63.311	2060–0253
63.322–63.325	2060–0234
63.345–63.347	2060–0327
63.363–63.367	2060–0283
63.403–63.406	2060–0268
63.420	2060–0325
63.422–63.428	2060–0325
63.467–63.468	2060–0273
63.480–63.506	2060–0356
63.525–63.528	2060–0290
63.548–63.550	2060–0296
63.563–63.567	2060–0289
63.653	2060–0340
63.654	2060–0340
63.703–63.707	2060–0326
63.752–63.753	2060–0314
63.787(a)–(b)	2060–0330
63.788(a)–(c)	2060–0330
63.806–63.807	2060–0324
63.829–63.830	2060–0335
63.846(d)	2060–0360
63.847(b), (g)	2060–0360
63.848(d)(5), (e), (f)(5)(ii), (g), (k), (m)	2060–0360
63.850	2060–0360
63.1311	2060–0351
63.1314	2060–0351
63.1315	2060–0351
63.1319	2060–0351
63.1320	2060–0351
63.1325–63.1332	2060–0351
63.1335	2060–0351
Chemical Accident Prevention Provisions	
68.120(a), (e), and (g)	2050–0127
State Operating Permit Programs	
70.3–70.11	2060–0243
Federal Operating Permit Programs	
71.5	2060–0336
71.6(a),(c),(d),(g)	2060–0336
71.7	2060–0336
71.9(e)–(j)	2060–0336
71.24–71.26	2060–0276
Permits Regulation	
72.7–72.10	2060–0258
72.14	2060–0258
72.20–72.25	2060–0258
72.30–72.33	2060–0258
72.40–72.44	2060–0258
72.50–72.51	2060–0258
72.60–72.69	2060–0258
72.70–72.74	2060–0258
72.80–72.85	2060–0258
72.90–72.96	2060–0258
Allowance System	
73.10–73.13	2060–0261
73.16	2060–0261
73.18–73.21	2060–0261
73.30–73.38	2060–0258
73.50–73.53	2060–0258
73.70–73.77	2060–0221
73.80–73.86	2060–0258
73.90	2060–0258

40 CFR citation	OMB control No.
Sulfur Dioxide Opt-ins	
74.12	2060–0258
74.14	2060–0258
74.16	2060–0258
74.18	2060–0258
74.20	2060–0258
74.22	2060–0258
74.24–74.25	2060–0258
74.41	2060–0258
74.43–74.44	2060–0258
74.46–74.47	2060–0258
74.60–74.64	2060–0258
Continuous Emission Monitoring	
75.4–75.5	2060–0258
75.10–75.18	2060–0258
75.20–75.24	2060–0258
75.30–75.34	2060–0258
75.40–75.48	2060–0258
75.50–75.52	2060–0258
75.53–75.56	2060–0258
75.60–75.67	2060–0258
Nitrogen Oxides Emission Reduction Program	
76.8–76.15	2060–0258
Excess Emissions	
77.3–77.6	2060–0258
Appeal Procedures for Acid Rain Program	
78.1–78.20	2060–0258
Registration of Fuels and Fuel Additives	
79.10–79.11	2060–0150
79.20–79.21	2060–0150
79.31–79.33	2060–0150
79.51(a), (c), (d), (g), (h)	2060–0150
79.52	2060–0150
79.57(a)(5)	2060–0150
79.57(f)(5)	2060–0150
79.58(e)	2060–0150
79.59(b)–(d)	2060–0150
79.60	2060–0150
79.61(e)	2060–0150
79.62–79.68	2060–0297
Regulation of Fuels and Fuel Additives	
80.20	2060–0066
80.25	2060–0066
80.27	2060–0178
80.29(c)	2060–0308
80.40	2060–0277
80.46	2060–0277
80.65	2060–0277
80.68–80.69	2060–0277
80.74–80.77	2060–0277
80.79	2060–0277
80.83	2060–0277
80.91–80.93	2060–0277
80.91–80.94	2060–0277
80.101–80.106	2060–0277
80.125	2060–0277
80.127–80.130	2060–0277
80.128–80.130	2060–0277
80.141(c)–(f)	2060–0275
80.157	2060–0275
80.158	2060–0275
80.160	2060–0275
80.161	2060–0275
80.162	2060–0275
80.163(d)(3)	2060–0275
80.164	2060–0275
80.165	2060–0275
80.166	2060–0275
80.167(d)	2060–0275
80.170	2060–0275
80.171	2060–0275
80.173	2060–0275
Protection of Stratospheric Ozone	
82.9–82.13	2060–0170
82.21	2060–0170
82.36	2060–0247
82.38	2060–0247
82.40	2060–0247
82.42	2060–0247
82.122	2060–0259
82.156	2060–0256
82.160–82.162	2060–0256
82.164	2060–0256
82.166	2060–0256
82.176(a)	2060–0226
82.176(c)(3)	2060–0226
82.178	2060–0226
82.180	2060–0350
82.180(a)(5)	2060–0226
82.180(b)(3)	2060–0226
82.184(c)	2060–0226
82.184(e)	2060–0226
Control of Air Pollution From Motor Vehicles and Motor Vehicle Engines	
85.503	2060–0104
85.505	2060–0104
85.1403	2060–0302
85.1404	2060–0302
85.1406	2060–0302
85.1407	2060–0302
85.1408	2060–0302
85.1409	2060–0302
85.1410	2060–0302
85.1411	2060–0302
85.1412	2060–0302
85.1413	2060–0302
85.1414	2060–0302
85.1415	2060–0302
85.1503–85.1507	2060–0095
85.1509–85.1510	2060–0095
85.1511(b)–(d), (f)	2060–0095
85.1511(b)(3)	2060–0007
85.1512	2060–0095
85.1514–85.1515	2060–0095
85.1703	2060–0124
85.1705–85.1706	2060–0007
85.1901–85.1909	2060–0048
85.2112–85.2123	2060–0065
85.2114	2060–0016
85.2115	2060–0016
Control of Air Pollution From New and In-Use Motor Vehicles and New and In-Use Motor Vehicle Engines: Certification and Test Procedures	
86.004–38	2060–0104
86.004–40	2060–0104
86.079–31—86.079–33	2060–0104
86.079–36	2060–0104
86.079–39	2060–0104
86.080–12	2060–0104

40 CFR citation	OMB control No.
86.082–34	2060–0104
86.085–13	2060–0104
86.085–37	2060–0104
86.087–38	2060–0104
86.090–14	2060–0104
86.090–21	2060–0104
86.090–25	2060–0104
86.090–26	2060–0104
86.090–27	2060–0104
86.091–7	2060–0104
86.091–15	2060–0104
86.091–21	2060–0104
86.091–23	2060–0104
86.091–28	2060–0104
86.091–30	2060–0104
86.092–14	2060–0104
86.092–15	2060–0104
86.092–23	2060–0104
86.092–24	2060–0104
86.092–26	2060–0104
86.092–35	2060–0104
86.094–7–86.094–9	2060–0104
86.094–15–86.094–16	2060–0104
86.094–17	2060–0104
86.094–18	2060–0104
86.094–21	2060–0104
86.094–23	2060–0104
86.094–24(a)(3)(iii)	2060–0314
86.094–25	2060–0104
86.094–30	2060–0104
86.094–35	2060–0104
86.095–14	2060–0104
86.095–23	2060–0104
86.095–24	2060–0104
86.095–26	2060–0104
86.095–30	2060–0104
86.095–35	2060–0104
86.094–38	2060–0104
86.096–7	2060–0104
86.096–8	2060–0104
86.096–9	2060–0104
86.096–10	2060–0104
86.096–14	2060–0104
86.096–21	2060–0104
86.096–23	2060–0104
86.096–24	2060–0104
86.096–26	2060–0104
86.096–30	2060–0104
86.096–35	2060–0104
86.097–9	2060–0104
86.098–23	2060–0104
86.098–28	2060–0104
86.099–8	2060–0104
86.099–9	2060–0104
86.099–10	2060–0104
86.111–94	2060–0104
86.113–82	2060–0104
86.113–87	2060–0104
86.113–90	2060–0104
86.113–91	2060–0104
86.113–94	2060–0104
86.135–82	2060–0104
86.135–90	2060–0104
86.135–94	2060–0104
86.142–90	2060–0104
86.144–90	2060–0104
86.144–94	2060–0104
86.150–98	2060–0104
86.336–79	2060–0104
86.337–79	2060–0104
86.412–78	2060–0104
86.414–78	2060–0104
86.415–78	2060–0104
86.416–80	2060–0104
86.421–78	2060–0104
86.423–78	2060–0104
86.427–78	2060–0104
86.428–80	2060–0104
86.429–78	2060–0104
86.431–78	2060–0104
86.432–78	2060–0104
86.434–78	2060–0104
86.435–78	2060–0104
86.436–78	2060–0104
86.437–78	2060–0104
86.438–78	2060–0104
86.439–78	2060–0104
86.440–78	2060–0104
86.513–94	2060–0104
86.537–90	2060–0104
86.542–90	2060–0104
86.603–88	2060–0064
86.604–84	2060–0064
86.605–88	2060–0064
86.606–84	2060–0064
86.607–84	2060–0064
86.608–88	2060–0064
86.608–90	2060–0064
86.608–96	2060–0104
86.609–84	2060–0064
86.609–96	2060–0104
86.612–84	2060–0064
86.614–84	2060–0064
86.615–84	2060–0064
86.709–94	2060–0104
86.709–99	2060–0104
86.884–5	2060–0104
86.884–7	2060–0104
86.884–9	2060–0104
86.884–10	2060–0104
86.884–12	2060–0104
86.884–13	2060–0104
86.1003–90	2060–0064
86.1004–84	2060–0064
86.1005–90	2060–0064
86.1006–84	2060–0064
86.1007–84	2060–0064
86.1008–90	2060–0064
86.1008–96	2060–0104
86.1009–84	2060–0064
86.1009–96	2060–0104
86.1012–84	2060–0064
86.1014–84	2060–0064
86.1015–87	2060–0064
86.1106–87	2060–0132
86.1108–87	2060–0132
86.1110–87	2060–0132
86.1111–87	2060–0104
86.1112–87–86.1115–87	2060–0132
86.1213–85	2060–0104
86.1213–87	2060–0104
86.1242–85	2060–0104
86.1242–90	2060–0104
86.1308–84	2060–0104
86.1310–90	2060–0104
86.1311–94	2060–0104
86.1313–84	2060–0104
86.1313–87	2060–0104
86.1313–90	2060–0104
86.1313–91	2060–0104
86.1313–94	2060–0104
86.1313–98	2060–0104
86.1314–84	2060–0104
86.1316–84	2060–0104
86.1316–90	2060–0104
86.1319–84	2060–0104

40 CFR citation	OMB control No.
86.1319–90	2060–0104
86.1321–84	2060–0104
86.1321–90	2060–0104
86.1323–84	2060–0104
86.1327–84	2060–0104
86.1327–88	2060–0104
86.1327–90	2060–0104
86.1327–98	2060–0104
86.1332–84	2060–0104
86.1332–90	2060–0104
86.1334–84	2060–0104
86.1335–90	2060–0104
86.1336–84	2060–0104
86.1340–84	2060–0104
86.1340–90	2060–0104
86.1341–90	2060–0104
86.1341–98	2060–0104
86.1342–90	2060–0104
86.1344–94	2060–0104
86.1413	2060–0104
86.1427	2060–0104
86.1432	2060–0104
86.1434	2060–0104
86.1437	2060–0104
86.1442	2060–0104
86.1542–84	2060–0104
86.1544–84	2060–0104
86.1705	2060–0345
86.1707	2060–0345
86.1708	2060–0345
86.1709	2060–0345
86.1710	2060–0345
86.1712	2060–0345
86.1713	2060–0345
86.1714	2060–0345
86.1717	2060–0345
86.1721	2060–0345
86.1723	2060–0345
86.1724	2060–0345
86.1725	2060–0345
86.1726	2060–0345
86.1728	2060–0345
86.1734	2060–0345
86.1735	2060–0345
86.1770	2060–0345
86.1771	2060–0345
86.1776	2060–0345
86.1777	2060–0345
86.1778	2060–0345
86.2500	2060–0104
Clean–Fuel Vehicles	
88.104–94(a), (c), (e), (f), (g), (h), (i), (j), (k)	2060–0104
88.105–94	2060–0104
88.204–94(b)(1)	2060–0314
88.204–94(c)	2060–0314
88.305–94	2060–0104
88.306–94(a), (b) introductory text	2060–0104
88.306–94(b)(1)	2060–0314
88.306–94(b)(2)	2060–0314
88.306–94(b)(4)	2060–0314
88.306–94(c)	2060–0314
88.306–94(f)	2060–0314
Control of Emissions From New and In-Use Nonroad Engines	
89.1	2060–0124
89.2	2060–0124
89.114–96–89.120–96	2060–0287
89.122–96–89.127–96	2060–0287
89.129–96	2060–0287
89.203–96–89.207–96	2060–0287
89.209–96–89.211–96	2060–0287
89.304–96–89.331–96	2060–0287
89.404–96–89.424–96	2060–0287
89.505–89.905	2060–0064
89.511	2060–0064
89.512	2060–0064
89.603–89.605	2060–0095
89.607–89.610	2060–0095
89.611	2060–0007, 2060–0095
89.612	2060–0095
89.801	2060–0048
89.803	2060–0048
89.903	2060–0048
89.905	2060–0007
89.906	2060–0007
Control of Emissions From New and In-use Nonroad Engines	
90.107–90.108	2060–0338
90.113	2060–0338
90.115–90.124	2060–0338
90.126	2060–0338
90.304–90.329	2060–0338
90.404–90.427	2060–0338
90.505–90.509	2060–0295
90.511–90.512	2060–0295
90.604	2060–0294
90.611–90.613	2060–0294
90.800	2060–0048
90.802–90.804	2060–0048
90.806	2060–0048
90.903	2060–0124
90.905–90.906	2060–0007
Determining Conformity of Federal Actions to State or Federal Implementation Plans	
93.150–93.160	2060–0279
Mandatory Patent Licenses	
95.2	2060–0307
Oil Pollution Prevention	
112.1–112.7	2050–0021
Oil Pollution Prevention; Non-Transportation-Related Onshore Facilities	
112.20	2050–0135
Designation, Reportable Quantities, and Notification for Hazardous Substances	
116.4	2050–0046
117.3	2050–0046
117.21	2050–0046
EPA Administered Permit Programs: The National Pollutant Discharge Elimination System	
122.21(f)–(l)	2040–0086, 2040–0170
122.21(j)(4)	2040–0150
122.21(m)–(p)	2040–0068, 2040–0170
122.26(c), (d)	2040–0086
122.41(h)	2040–0068, 2040–0170

40 CFR citation	OMB control No.
122.41(j)	2040–0009, 2040–0110, 2040–0170
122.41(l)	2040–0110, 2040–0068, 2040–0170
122.42(c)	2040–0086
122.42(a), (b), (l)	2040–0068, 2040–0170
122.44(g), (i)	2040–0004, 2040–0170, 2040–0110
122.44(r)	2040–0180
122.45(b)	2040–0004, 2040–0110
122.45(b)(4)	2040–0068
122.47(a)	2040–0110, 2040–0170
122.47(b)	2040–0110, 2040–0068, 2040–0170
122.48	2040–0004, 2040–0170
122.62(a)	2040–0068, 2040–0170
122.63	2040–0068, 2040–0170
State Permit Requirements	
123.21–123.24	2040–0057, 2040–0170
123.25	2040–0004, 2040–0110, 2040–0170, 2040–0180
123.26–123.29	2040–0057, 2040–0170
123.43	2040–0057, 2040–0170
123.44	2040–0057, 2040–0170, 2040–0180
123.45	2040–0057, 2040–0170
123.62	2040–0057, 2040–0170, 2040–0180
123.63	2040–0057, 2040–0170, 2040–0180
123.64	2040–0057, 2040–0170
Procedures for Decisionmaking	
124.5	2040–0068
124.31	2050–0149
124.32	2050–0149
124.33	2050–0149
124.53–124.54	2040–0057
Criteria and Standards for the National Pollutant Discharge Elimination System	
125.59–125.67, and appendix A and B	2040–0088
Water Quality Planning and Management	
130.6–130.10	2040–0071
130.15	2040–0071
Water Quality Standards Regulation	
131.1	2040–0180
131.5	2040–0180
131.6–131.8	2040–0049
131.20	2040–0049
131.21	2040–0049, 2040–0180
131.22	2040–0049
131.31–131.36	2040–0049
Water Quality Guidance for the Great Lakes System	
132.1	2040–0180
132.2	2040–0180
132.3	2040–0180
132.4	2040–0180
132.5	2040–0180
Part 132, appendix A	2040–0180
Part 132, appendix B	2040–0180
Part 132, appendix C	2040–0180
Part 132, appendix D	2040–0180
Part 132, appendix E	2040–0180
Part 132, appendix F	2040–0180
Marine Sanitation Device Standard	
Part 140	2040–0187
National Primary Drinking Water Regulations	
141.2	2040–0090
141.4	2040–0090
141.11–141.15	2040–0090
141.21–141.22	2040–0090
141.23–141.24	2040–0090
141.25–141.30	2040–0090
141.31–141.32	2040–0090
141.33–141.35	2040–0090
141.40	2040–0090
141.41–141.43	2040–0090
141.50–141.52	2040–0090
141.60–141.63	2040–0090
141.70–141.75	2040–0090
141.80–141.91	2040–0090
141.100	2040–0090
141.110–141.111	2040–0090
141.140–141.144	2040–0183
National Primary Drinking Water Regulations Implementation	
142.2–142.3	2040–0090
142.10–142.15	2040–0090
142.16	2060–0090
142.17–142.24	2040–0090
142.56–142.57	2040–0090
142.60–142.61	2040–0090
142.62	2040–0090
142.63–142.64	2040–0090
142.70–142.78	2040–0090
142.81–142.81	2040–0090
Underground Injection Control Program	
144.8	2040–0042
144.12	2040–0042
144.14–144.15	2040–0042
144.23	2040–0042
144.25–144.28	2040–0042
144.31–144.33	2040–0042
144.38	2040–0042
144.41	2040–0042
144.51–144.55	2040–0042

40 CFR citation	OMB control No.
144.62–144.66	2040–0042
144.70	2040–0042
Underground Injection Control Program: Criteria and Standards	
146.10	2040–0042
146.12–146.15	2040–0042
146.22–146.25	2040–0042
146.32–146.35	2040–0042
146.52	2040–0042
146.64	2040–0042
146.66–146.73	2040–0042
State Underground Injection Control Programs	
147.104	2040–0042
147.304–147.305	2040–0042
147.504	2040–0042
147.754	2040–0042
147.904	2040–0042
147.1154	2040–0042
147.1354–147.1355	2040–0042
147.1454	2040–0042
147.1654	2040–0042
147.1954	2040–0042
147.2103–147.2104	2040–0042
147.2154	2040–0042
147.2402	2040–0042
147.2905	2040–0042
147.2912–147.2913	2040–0042
147.2915	2040–0042
147.2918	2040–0042
147.2920–147.2926	2040–0042
147.2929	2040–0042
147.3002–147.3003	2040–0042
147.3006–147.3007	2040–0042
147.3011	2040–0042
147.3014–147.3016	2040–0042
147.3101	2040–0042
147.3104–147.3105	2040–0042
147.3107–147.3109	2040–0042
Hazardous Waste Injection Restrictions	
148.5	2040–0042
148.20–148.23	2040–0042
Pesticide Registration and Classification Procedures	
152.46	2070–0060
152.50	2070–0024, 2070–0040, 2070–0060
152.80	2070–0040, 2070–0060
152.85	2070–0040, 2070–0060
152.98	2070–0060
152.122	2070–0060
152.132	2070–0044
152.135	2070–0060
152.164	2070–0060
152.404	2070–0040, 2070–0060
152.406	2070–0040, 2070–0060
152.412	2070–0040, 2070–0060
152.414	2070–0040, 2070–0060
Registration Standards	
155.30	2070–0057
Labeling Requirements for Pesticides and Devices	
156.36	2070–0052
156.206	2070–0060
156.208	2070–0060
156.210	2070–0060
156.212	2070–0060
Packaging Requirements for Pesticides and Devices	
157.22	2070–0052
157.24	2070–0052
157.34	2070–0052
157.36	2070–0052
Data Requirements for Registration	
158.30	2070–0040, 2070–0057, 2070–0060, 2070–0107
158.32	2070–0040, 2070–0053, 2070–0057, 2070–0060, 2070–0107
158.34	2070–0040, 2070–0057, 2070–0060, 2070–0107
158.45	2070–0040, 2070–0057, 2070–0060, 2070–0107
158.75	2070–0040, 2070–0057, 2070–0060, 2070–0107
158.101	2070–0040, 2070–0057, 2070–0060, 2070–0107
158.155	2070–0040, 2070–0057, 2070–0060, 2070–0107
158.160	2070–0040, 2070–0057, 2070–0060, 2070–0107
158.162	2070–0040, 2070–0057, 2070–0060, 2070–0107
158.165	2070–0040, 2070–0057, 2070–0060, 2070–0107
158.167	2070–0040, 2070–0057, 2070–0060, 2070–0107
158.170	2070–0040, 2070–0057, 2070–0060, 2070–0107

40 CFR citation	OMB control No.
158.175	2070–0040, 2070–0057, 2070–0060, 2070–0107
158.180	2070–0040, 2070–0057, 2070–0060, 2070–0107
158.190	2070–0040, 2070–0057, 2070–0060, 2070–0107
158.240	2070–0057, 2070–0060, 2070–0107
158.290	2070–0057, 2070–0060, 2070–0107
158.340	2070–0057, 2070–0060, 2070–0107
158.390	2070–0057, 2070–0060, 2070–0107
158.440	2070–0057, 2070–0060, 2070–0107
158.490	2070–0057, 2070–0060, 2070–0107
158.540	2070–0057, 2070–0060, 2070–0107
158.590	2070–0057, 2070–0060, 2070–0107
158.640	2070–0057, 2070–0060, 2070–0107
158.690	2070–0057, 2070–0060, 2070–0107
158.740	2070–0057, 2070–0060, 2070–0107
Good Laboratory Practice Standards	
Part 160	2070–0024, 2070–0032, 2070–0040, 2070–0055, 2070–0057, 2070–0060, 2070–0107
State Registration of Pesticide Products	
162.153	2070–0055
Certification of Usefulness of Pesticide Chemicals	
163.4	2070–0060, 2070–0024
163.5	2070–0060, 2070–0024
Exemption of Federal and State Agencies for Use of Pesticides Under Emergency Conditions	
166.20	2070–0032
166.32	2070–0032
166.43	2070–0032
166.50	2070–0032
Registration of Pesticide and Active Ingredient Producing Establishments, Submission of Pesticide Reports	
Part 167	2070–0078
Statements of Enforcement Policies and Interpretations	
168.65	2070–0027
168.75	2070–0027
168.85	2070–0027, 2070–0028,, 2070–0078
Books and Records of Pesticide Production and Distribution	
169.2	2070–0028
Worker Protection Standards for Agricultural Pesticides	
Part 170	2070–0148
Certification of Pesticide Applicators	
171.7	2070–0029
171.8	2070–0029
171.9	2070–0029
171.10	2070–0029
171.11	2070–0029
Experimental Use Permits	
172.4	2070–0040
172.8	2070–0040
Issuance of Food Additive Regulations	
177.81	2070–0024
177.92	2070–0024
177.98	2070–0024
177.99	2070–0024
177.102	2070–0024
177.105	2070–0024
177.110	2070–0024
177.116	2070–0024
Tolerances and Exemptions from Tolerances for Pesticide Chemicals in or on Raw Agricultural Commodities	
180.7	2070–0024
180.8	2070–0024
180.9	2070–0024
180.31	2070–0024
180.32	2070–0024
180.33	2070–0024
404 State Program Regulations	
233.10–233.12	2040–0168
233.21	2040–0168
233.30	2040–0168
233.50	2040–0168
233.52	2040–0168
233.61	2040–0140
Criteria for Classification of Solid Waste Disposal Facilities and Practices	
257.24	2050–0154
257.25	2050–0154
257.27	2050–0154

40 CFR citation	OMB control No.
Criteria for Municipal Solid Waste Landfills	
Part 258	2050–0122
258.10–258.16	2050–0122
258.20	2050–0122
258.23	2050–0122
258.28–258.29	2050–0122
258.51	2050–0122
258.53–258.55	2050–0122
258.57–258.58	2050–0122
258.60–258.61	2050–0122
258.71–258.74	2050–0122
Hazardous Waste Management System: General	
260.20–260.22	2050–0053
260.23	2050–0145
260.31–260.33	2050–0053
Identification and Listing of Hazardous Waste	
261.3	2050–0085
261.4	2050–0053
261.35	2050–0115
Standards Applicable to Generators of Hazardous Waste	
262.12	2050–0028
262.20	2050–0039
262.22–262.23	2050–0039
262.34	2050–0035, 2050–0085
262.40(a)	2050–0039
262.40(b)	2050–0024
262.40(c)	2050–0035
262.41	2050–0024
262.42	2050–0039
262.43	2050–0035
262.44(a)–(b)	2050–0039
262.44(c)	2050–0035
262.53–262.57	2050–0035
262.60	2050–0035
Standards Applicable to Transporters of Hazardous Waste	
263.11	2050–0028
263.20–263.22	2050–0039
263.30	2050–0039
Standards for Owners and Operators of Hazardous Waste Treatment, Storage, and Disposal Facilities	
264.11	2050–0028
264.12(a)	2050–0120
264.13	2050–0120, 2050–0009
264.14	2050–0009
264.15	2050–0120, 2050–0009
264.16	2050–0120, 2050–0009
264.17	2050–0120
264.18	2050–0009
264.19	2050–0009
264.32	2050–0009
264.35	2050–0009
264.37	2050–0120
264.51	2050–0009
264.52	2050–0009
264.53	2050–0120
264.54	2050–0120
264.56	2050–0120
264.71	2050–0039
264.72	2050–0039
264.73	2050–0120
264.74	2050–0120
264.75	2050–0024
264.76	2050–0039
264.90	2050–0009
264.96	2050–0120
264.97(g)	2050–0120
264.97(h)	2050–0009
264.97(j)	2050–0120
264.98(c), (g)(1), (g)(5), (g)(6)	2050–0033
264.98(g)(4), (h)	2050–0009
264.99(c), (g), (h)(1), (i)(1), (i)(2)	2050–0033
264.99(h)(2), (i)(3), (j)	2050–0009
264.100(e), (f), (g)	2050–0033
264.100(h)	2050–0009
264.101	2050–0120
264.112(a), (b), (c)	2050–0009
264.112(d)	2050–0120
264.113(a), (b), (d)	2050–0120
264.113(e)	2050–0050
264.115	2050–0120
264.116	2050–0120
264.118	2050–0009
264.119(a), (b)	2050–0120
264.119(c)	2050–0009
264.120	2050–0120
264.142(a)	2050–0009
264.142(b), (c), (d)	2050–0120
264.143	2050–0120
264.144(a)	2050–0009
264.144(b), (c), (d)	2050–0120
264.145	2050–0120
264.147(a)(7), (b)(7), (f),(g)	2050–0120
264.147(a)(1), (b)(1), (c), (f), (g), (h), (i), (j)	2050–0009
264.148	2050–0120
264.149	2050–0009
264.150	2050–0009
264.190	2050–0050
264.191	2050–0050
264.192(a)	2050–0009
264.192(g)	2050–0050
264.193(c), (d), (e), (g), (h)	2050–0009
264.193(i)	2050–0050
264.196	2050–0050
264.197(b)	2050–0050
264.197(c)	2050–0009
264.221	2050–0009
264.222(a)	2050–0009
264.222(b)	2050–0050
264.223(a)	2050–0009
264.223(b), (c)	2050–0050
264.226(c)	2050–0050, 2050–0009
264.226(d)	2050–0050
264.227	2050–0050
264.231	2050–0009
264.251	2050–0009
264.252(a)	2050–0009
264.252(b)	2050–0050
264.253(a)	2050–0009
264.253(b), (c)	2050–0050
264.254	2050–0050
264.259	2050–0009
264.271	2050–0009
264.272	2050–0009
264.276	2050–0050, 2050–0009
264.278(a)–(f), (h)	2050–0050
264.278(g)	2050–0050, 2050–0009
264.280	2050–0050
264.283	2050–0009

40 CFR citation	OMB control No.
264.301	2050–0009
264.302(a)	2050–0009
264.302(b)	2050–0050
264.303(a)	2050–0009
264.303(b)	2050–0050
264.304(a)	2050–0009
264.304(b), (c)	2050–0050
264.314	2050–0050
264.317	2050–0009
264.340	2050–0009
264.343	2050–0050
264.344	2050–0009
264.347	2050–0050
264.552	2050–0009
264.570	2050–0050
264.571	2050–0050
264.573	2050–0050
264.574	2050–0050
264.575	2050–0009
264.603	2050–0050
264.1033(a)	2050–0009
264.1033(j)	2050–0050
264.1034	2050–0050
264.1035	2050–0050
264.1036	2050–0050
264.1061	2050–0050
264.1062	2050–0050
264.1063	2050–0050
264.1064	2050–0050, 2050–0009
264.1065	2050–0050
264.1089	2060–0318
264.1090	2060–0318
264.1100	2050–0050
264.1101	2050–0050
Interim Status Standards for Owners and Operators of Hazardous Waste Treatment, Storage, and Disposal Facilities	
265.11	2050–0028
265.12(a)	2050–0120
265.13	2050–0120
265.15	2050–0120
265.16	2050–0120
265.19	2050–0120
265.37	2050–0120
265.51	2050–0120
265.52	2050–0120
265.53	2050–0120
265.54	2050–0120
265.56	2050–0120
265.71	2050–0039
265.72	2050–0039
265.73	2050–0120
265.75	2050–0024
265.76	2050–0039
265.90	2050–0033
265.92	2050–0033
265.93	2050–0033
265.94	2050–0033
265.112	2050–0120
265.113(a), (b), (d)	2050–0120
265.113(e)	2050–0050
265.115	2050–0120
265.116	2050–0120
265.118	2050–0120
265.119	2050–0120
265.120	2050–0120
265.142	2050–0120
265.143	2050–0120
265.144	2050–0120
265.145	2050–0120
265.147	2050–0120
265.148	2050–0120
265.149	2050–0120
265.150	2050–0120
265.190	2050–0035, 2050–0050
265.191	2050–0035, 2050–0050
265.192	2050–0035, 2050–0050
265.193	2050–0035, 2050–0050
265.195	2050–0120
265.196	2050–0035, 2050–0050
265.197(b)	2050–0050
265.197(c)	2050–0120
265.221	2050–0050
265.222	2050–0050
265.223	2050–0050
265.225	2050–0050
265.226	2050–0050
265.229	2050–0050
265.254	2050–0050
265.255	2050–0050
265.259	2050–0050
265.260	2050–0050
265.273	2050–0120
265.276	2050–0050
265.278	2050–0050
265.280	2050–0050
265.301	2050–0050
265.302	2050–0050
265.303	2050–0050
265.304	2050–0050
265.314	2050–0050
265.340	2050–0050
265.352	2050–0050
265.383	2050–0050
265.404	2050–0050
265.440	2050–0050
265.441	2050–0050
265.443	2050–0050
265.444	2050–0050
265.445	2050–0120
265.1033	2050–0050
265.1034	2050–0050
265.1035	2050–0050
265.1061	2050–0050
265.1062	2050–0050
265.1063	2050–0050
265.1064	2050–0050
265.1090	2060–0318
265.1100	2050–0050
265.1101	2050–0050
Standards for the Management of Specific Hazardous Wastes and Specific Types of Hazardous Waste Management Facilities	
266.70 (b)	2050–0028
266.70(c)	2050–0050
266.80	2050–0028
266.100	2050–0073
266.102	2050–0073
266.103	2050–0073
266.104	2050–0073
266.106	2050–0073
266.107	2050–0073
266.108	2050–0073
266.109	2050–0073
266.111	2050–0073
266.112	2050–0073

40 CFR citation	OMB control No.
Appendix IX	2050–0073
Land Disposal Restrictions	
268.4–268.5	2050–0085
268.6	2050–0062
268.7	2050–0085
268.9	2050–0085
268.42	2050–0085
268.44	2050–0085
EPA Administered Permit Programs: The Hazardous Waste Permit Program	
270.1	2050–0028, 2050–0034, 2050–0009
270.10	2050–0009
270.11	2050–0034
270.13	2050–0034
270.14	2050–0009
270.14(b)(21)	2050–0062, 2050–0085
270.15	2050–0009
270.16	2050–0009
270.17	2050–0009
270.18	2050–0009
270.19	2050–0009
270.20	2050–0009
270.21	2050–0009
270.22	2050–0073
270.23	2050–0009
270.24	2050–0009
270.25	2050–0009
270.26	2050–0115
270.30	2050–0120
270.33	2050–0009
270.40	2050–0009
270.41	2050–0009
270.42	2050–0009
270.51	2050–0009
270.62	2050–0009, 2050–0149
270.63	2050–0009
270.65	2050–0009
270.66	2050–0073, 2050–0149
270.72	2050–0034
270.73	2050–0009
Requirements for Authorization of State Hazardous Waste Programs	
271.5–271.8	2050–0041
271.20–271.21	2050–0041
271.23	2050–0041
Standards for Universal Waste Management	
273.14	2050–0145
273.15	2050–0145
273.18	2050–0145
273.32	2050–0145
273.34	2050–0145
273.35	2050–0145
273.38	2050–0145
273.39	2050–0145
273.61	2050–0145
273.62	2050–0145
273.80	2050–0145
Standards for Management of Used Oil	
279.10–279.11	2050–0124
279.42	2050–0028, 2050–0124
279.43–279.44	2050–0124
279.46	2050–0050
279.51	2050–0028
279.52–279.55	2050–0124
279.56	2050–0050
279.57	2050–0050, 2050–0124
279.62	2050–0028
279.63	2050–0124
279.65–279.66	2050–0050
279.72	2050–0050
279.73	2050–0028
279.74–279.75	2050–0050
279.82	2050–0124
Technical Standards and Corrective Action Requirements for Owners and Operators of Underground Storage Tanks (USTs)	
280.11(a)	2050–0068
280.20(a)–(b)	2050–0068
280.20(e)	2050–0068
280.22(a)–(f)	2050–0068
280.22(g)	2050–0068
280.31	2050–0068
280.33(f)	2050–0068
280.34(a)	2050–0068
280.34(b)	2050–0068
280.34(c)	2050–0068
280.40	2050–0068
280.43	2050–0068
280.44	2050–0068
280.45	2050–0068
280.50	2050–0068
280.53	2050–0068
280.61	2050–0068
280.62	2050–0068
280.63	2050–0068
280.64	2050–0068
280.65	2050–0068
280.66(a)	2050–0068
280.66(c)	2050–0068
280.66(d)	2050–0068
280.67	2050–0068
280.71(a)	2050–0068
280.72(a)	2050–0068
280.74	2050–0068
280.95	2050–0068
280.96	2050–0068
280.97	2050–0068
280.98	2050–0068
280.99	2050–0068
280.100	2050–0068
280.101	2050–0068
280.102	2050–0068
280.103	2050–0068
280.104	2050–0068
280.105	2050–0068
280.106	2050–0068
280.107	2050–0068
280.108	2050–0068
280.109(a)	2050–0068
280.109(b)	2050–0068
280.110	2050–0068
280.111	2050–0068
280.111(b)(11)	2050–0068
280.114(a)–(d)	2050–0068
280.114(e)	2050–0068
Approval of State Underground Storage Tank Programs	
281.120(a)	2050–0068

40 CFR citation	OMB control No.
281.120(g)	2050–0068
281.121	2050–0068
281.122	2050–0068
281.124	2050–0068
281.125	2050–0068
281.140	2050–0068
281.143(a)	2050–0068
281.150	2050–0068
281.152	2050–0068
281.161	2050–0068
National Oil and Hazardous Substances Pollution Contingency Plan	
300.405	2050–0046
300.425	2050–0095
300.430	2050–0096
300.435	2050–0096
300.920	2050–0141
Part 300, appendix A	2050–0095
Designation, reportable quantities, and notification	
302.4	2050–0046
302.6	2050–0046
302.8	2050–0086
Hazardous Substances Superfund; Response Claims Procedures	
307.11–307.14	2050–0106
307.21–307.23	2050–0106
307.30–307.32	2050–0106
Reimbursement to Local Governments for Emergency Response to Hazardous Substance Releases	
310.05	2050–0077
310.10–310.12	2050–0077
310.20	2050–0077
310.30	2050–0077
310.40	2050–0077
310.50	2050–0077
310.60	2050–0077
310.70	2050–0077
310.80	2050–0077
310.90	2050–0077
Part 310, appendix II	2050–0077
Worker Protection Standards for Hazardous Waste Operations and Emergency Response	
311.1–311.2	2050–0105
Trade Secrecy Claims for Emergency Planning and Community Right-to-Know; Health Professionals	
350.5–350.16	2050–0078
350.27	2050–0078
350.40	2050–0078
Emergency planning and notification	
Part 355, appendix A, appendix B	2050–0046
Toxic Chemical Release Reporting: Community Right–to–Know	
Part 372	2070–0093
Part 372, subpart A	2070–0093, 2070–0143
372.22	2070–0093, 2070–0143
372.25	2070–0093
372.27	2070–0143
372.30	2070–0093, 2070–0143
372.38	2070–0093, 2070–0143
Part 372, subpart C	2070–0093, 2070–0143
Part 372, subpart D	2070–0093, 2070–0143
372.85	2070–0093
372.95	2070–0143
General Pretreatment Regulations for Existing and New Sources of Pollution	
403.5(b)	2040–0009
403.6–403.7	2040–0009
403.8(a)–(e)	2040–0009
403.8(f)	2040–0009
403.9–403.10	2040–0009
403.12(b)–(g)	2040–0009
403.12(h), (i)	2040–0009
403.12(j), (k), (l), (o)	2040–0009
403.12(m), (p)	2040–0009
403.13	2040–0009
403.15	2040–0009
403.17–403.18	2040–0009, 2040–0170
Steam Electric Generating Point Source Category	
423.12–423.13	2040–0033
423.15	2040–0033
Pulp, Paper, and Paperboard Point Source Category	
430.14–430.17	2040–0033
430.24–430.27	2040–0033
430.54–430.57	2040–0033
430.64–430.67	2040–0033
430.74–430.77	2040–0033
430.84–430.87	2040–0033
430.94–430.97	2040–0033
430.104–430.107	2040–0033
430.114–430.117	2040–0033
430.134–430.137	2040–0033
430.144–430.147	2040–0033
430.154–430.157	2040–0033
430.164–430.167	2040–0033
430.174–430.177	2040–0033
430.184–430.187	2040–0033
430.194–430.197	2040–0033
430.204–430.207	2040–0033
430.214–430.217	2040–0033
430.224–430.227	2040–0033
430.234–430.237	2040–0033
430.244–430.247	2040–0033
430.254–430.257	2040–0033
430.264–430.267	2040–0033
The Builders' Paper and Board Mills Point Source Category	
431.14–431.17	2040–0033
Pharmaceutical Manufacturing Point Source Category	
439.14–439.17	2040–0033
439.24–439.27	2040–0033
439.34–439.37	2040–0033
439.44–439.47	2040–0033

40 CFR citation	OMB control No.
Coil Coating Point Source Category	
465.03	2040–0033
Porcelain Enameling Point Source Category	
466.03	2040–0033
Aluminum Forming Point Source Category	
467.03	2040–0033
State Sludge Management Program Requirements	
501.15(a)	2040–0086, 2040–0110
501.15(b)	2040–0004, 2040–0068, 2040–0110
501.15(c)	2040–0068
501.16	2040–0057
501.21	2040–0057
Standards for the Use or Disposal of Sewage Sludge	
503.17–503.18	2040–0157
503.27–503.28	2040–0157
503.47–503.48	2040–0157
Fuel Economy of Motor Vehicles	
600.006–86	2060–0104
600.007–80	2060–0104
600.010–86	2060–0104
600.113–88	2060–0104
600.113–93	2060–0104
600.206–86	2060–0104
600.207–86	2060–0104
600.209–85	2060–0104
600.306–86	2060–0104
600.307–86	2060–0104
600.311–86	2060–0104
600.312–86	2060–0104
600.313–86	2060–0104
600.314–86	2060–0104
600.507–86	2060–0104
600.509–86	2060–0104
600.510–86	2060–0104
600.512–86	2060–0104
Toxic Substances Control Act: General	
700.45	2070–0012, 2070–0038
Reporting and Recordkeeping Requirements	
704.5	2010–0019, 2070–0067
704.11	2010–0019, 2070–0067
704.25	2070–0067
704.33	2070–0067
704.43	2070–0067
704.45	2070–0067
704.95	2070–0067
704.102	2070–0067
704.104	2070–0067L='sΘ'
704.175	2070–0067
Chemical Imports and Exports	
707.65	2070–0030
707.67	2070–0030
707.72	2070–0030
Inventory Reporting Regulations	
Part 710	2070–0070
Chemical Information Rules	
712.5	2070–0054
712.7	2070–0054
712.20	2070–0054
712.28	2070–0054
712.30	2070–0054
Health and Safety Data Reporting	
716.5	2070–0004
716.10	2070–0004
716.20	2070–0004
716.25	2070–0004
716.30	2070–0004
716.35	2070–0004
716.40	2070–0004
716.45	2070–0004
716.50	2070–0004
716.60	2070–0004
716.65	2070–0004
716.105	2070–0004
716.120	2070–0004
Records and Reports of Allegations That Chemical Substances Cause Significant Adverse Reactions to Health or the Environment	
717.5	2070–0017
717.7	2070–0017
717.12	2070–0017
717.15	2070–0017
717.17	2070–0017
Premanufacture Notification	
720.1	2070–0012
720.22	2070–0012
720.25	2070–0012
720.30	2070–0012
720.36	2070–0012
720.38	2070–0012
Part 720, subpart C	2070–0012
720.62	2070–0012
720.75	2070–0012
720.78	2070–0012
720.80	2070–0012
720.85	2070–0012
720.87	2070–0012
720.90	2070–0012
720.102	2070–0012
Part 720, appendix A	2070–0012
Significant New Uses of Chemical Substances	
Part 721, subpart A	2070–0012, 2070–0038
721.72	2070–0012, 2070–0038
721.125	2070–0012, 2070–0038
721.160	2070–0012, 2070–0038
721.170	2070–0012, 2070–0038
721.185	2070–0012, 2070–0038
721.225	2070–0012

40 CFR citation	OMB control No.
721.267	2070–0012
721.275	2070–0012
721.285	2070–0012
721.320	2070–0012
721.323	2070–0012
721.325	2070–0012
721.336	2070–0012
721.370	2070–0012
721.390	2070–0012
721.400	2070–0012
721.415	2070–0012
721.430	2070–0012
721.445	2070–0012
721.460	2070–0012
721.470	2070–0012
721.484	2070–0012
721.490	2070–0012
721.505	2070–0012
721.520	2070–0012
721.530	2070–0012
721.536	2070–0012
721.540	2070–0012
721.550	2070–0012
721.562	2070–0012
721.575	2070–0012
721.600	2070–0012
721.625	2070–0012
721.639	2070–0012
721.642	2070–0012
721.646	2070–0012
721.650	2070–0038
721.700	2070–0012
721.715	2070–0012
721.750	2070–0012
721.757	2070–0012
721.775	2070–0012
721.785	2070–0012
721.805	2070–0012
721.825	2070–0012
721.840	2070–0012
721.875	2070–0012
721.925	2070–0012
721.950	2070–0012
721.982	2070–0012
721.1000	2070–0012
721.1025	2070–0038
721.1050	2070–0012
721.1068	2070–0012
721.1075	2070–0012
721.1120	2070–0012
721.1150	2070–0012
721.1175	2070–0012
721.1187	2070–0012
721.1193	2070–0012
721.1210	2070–0012
721.1225	2070–0012
721.1240	2070–0012
721.1300	2070–0012
721.1325	2070–0012
721.1350	2070–0012
721.1372	2070–0012
721.1375	2070–0012
721.1425	2070–0038
721.1430	2070–0038
721.1435	2070–0038
721.1440	2070–0038
721.1450	2070–0012
721.1500	2070–0012
721.1525	2070–0012
721.1550	2070–0012
721.1555	2070–0012
721.1568	2070–0012
721.1575	2070–0012
721.1612	2070–0012
721.1625	2070–0012
721.1630	2070–0012
721.1637	2070–0012
721.1640	2070–0012
721.1643	2070–0012
721.1645	2070–0012
721.1650	2070–0012
721.1660	2070–0038
721.1675	2070–0012
721.1700	2070–0012
721.1725	2070–0012
721.1728	2070–0012
721.1732	2070–0012
721.1735	2070–0012
721.1737	2070–0012
721.1738	2070–0012
721.1740	2070–0012
721.1745	2070–0012
721.1750	2070–0012
721.1755	2070–0012
721.1765	2070–0012
721.1769	2070–0012
721.1775	2070–0012
721.1790	2070–0038
721.1800	2070–0012
721.1820	2070–0012
721.1825	2070–0012
721.1850	2070–0012
721.1875	2070–0012
721.1900	2070–0012
721.1920	2070–0012
721.1925	2070–0012
721.1950	2070–0012
721.2025	2070–0012
721.2050	2070–0012
721.2075	2070–0012
721.2084	2070–0038
721.2085	2070–0012
721.2086	2070–0012
721.2088	2070–0012
721.2089	2070–0012
721.2092	2070–0038
721.2095	2070–0012
721.2097	2070–0012
721.2120	2070–0012
721.2140	2070–0012
721.2170	2070–0012
721.2175	2070–0012
721.2250	2070–0012
721.2260	2070–0012
721.2270	2070–0012
721.2275	2070–0012
721.2287	2070–0038
721.2340	2070–0012
721.2355	2070–0038
721.2380	2070–0012
721.2410	2070–0012
721.2420	2070–0012
721.2475	2070–0012
721.2520	2070–0012
721.2527	2070–0012
721.2540	2070–0012
721.2560	2070–0012
721.2565	2070–0012
721.2575	2070–0012
721.2600	2070–0038
721.2625	2070–0012
721.2650	2070–0012
721.2675	2070–0012
721.2725	2070–0038
721.2750	2070–0012
721.2800	2070–0038

40 CFR citation	OMB control No.
721.2815	2070–0012
721.2825	2070–0012
721.2840	2070–0012
721.2860	2070–0012
721.2880	2070–0012
721.2900	2070–0012
721.2920	2070–0012
721.2930	2070–0012
721.2940	2070–0012
721.2950	2070–0012
721.3000	2070–0012
721.3020	2070–0012
721.3028	2070–0012
721.3034	2070–0012
721.3040	2070–0012
721.3060	2070–0012
721.3063	2070–0012
721.3080	2070–0012
721.3100	2070–0012
721.3120	2070–0012
721.3140	2070–0012
721.3152	2070–0012
721.3160	2070–0038
721.3180	2070–0012
721.3200	2070–0012
721.3220	2070–0038
721.3248	2070–0012
721.3260	2070–0012
721.3320	2070–0012
721.3340	2070–0012
721.3350	2070–0038
721.3360	2070–0012
721.3364	2070–0012
721.3374	2070–0012
721.3380	2070–0012
721.3390	2070–0012
721.3420	2070–0012
721.3430	2070–0038
721.3435	2070–0012
721.3437	2070–0012
721.3440	2070–0012
721.3460	2070–0012
721.3480	2070–0012
721.3486	2070–0012
721.3500	2070–0012
721.3520	2070–0012
721.3560	2070–0012
721.3620	2070–0012
721.3625	2070–0012
721.3627	2070–0012
721.3628	2070–0012
721.3629	2070–0012
721.3640	2070–0012
721.3680	2070–0012
721.3700	2070–0012
721.3720	2070–0012
721.3740	2070–0012
721.3760	2070–0012
721.3764	2070–0012
721.3780	2070–0012
721.3790	2070–0012
721.3800	2070–0012
721.3815	2070–0012
721.3840	2070–0012
721.3860	2070–0012
721.3870	2070–0012
721.3880	2070–0012
721.3900	2070–0012
721.4000	2070–0012
721.4020	2070–0012
721.4040	2070–0012
721.4060	2070–0012
721.4080	2070–0038
721.4100	2070–0012
721.4110	2070–0012
721.4128	2070–0012
721.4133	2070–0012
721.4140	2070–0038
721.4155	2070–0038
721.4160	2070–0038
721.4180	2070–0038
721.4200	2070–0012
721.4215	2070–0012
721.4220	2070–0012
721.4240	2070–0012
721.4250	2070–0012
721.4255	2070–0012
721.4260	2070–0012
721.4270	2070–0012
721.4280	2070–0012
721.4300	2070–0012
721.4320	2070–0012
721.4340	2070–0012
721.4360	2070–0038
721.4380	2070–0012
721.4390	2070–0012
721.4400	2070–0012
721.4420	2070–0012
721.4460	2070–0012
721.4463	2070–0012
721.4466	2070–0012
721.4470	2070–0012
721.4473	2070–0012
721.4484	2070–0012
721.4480	2070–0012
721.4490	2070–0012
721.4494	2070–0012
721.4497	2070–0012
721.4500	2070–0012
721.4520	2070–0012
721.4550	2070–0012
721.4568	2070–0012
721.4585	2070–0012
721.4587	2070–0012
721.4590	2070–0012
721.4594	2070–0012
721.4600	2070–0012
721.4620	2070–0012
721.4640	2070–0012
721.4660	2070–0012
721.4663	2070–0012
721.4668	2070–0012
721.4680	2070–0012
721.4685	2070–0012
721.4700	2070–0012
721.4720	2070–0012
721.4740	2070–0038
721.4780	2070–0012
721.4790	2070–0012
721.4794	2070–0012
721.4800	2070–0012
721.4820	2070–0012
721.4840	2070–0012
721.4880	2070–0012
721.4925	2070–0038
721.5050	2070–0012
721.5075	2070–0012
721.5175	2070–0038
721.5192	2070–0012
721.5200	2070–0012
721.5225	2070–0012
721.5250	2070–0012
721.5275	2070–0012
721.5276	2070–0012
721.5278	2070–0012
721.5282	2070–0012

40 CFR citation	OMB control No.
721.5285	2070–0012
721.5300	2070–0012
721.5310	2070–0012
721.5325	2070–0012
721.5330	2070–0012
721.5350	2070–0012
721.5375	2070–0012
721.5385	2070–0012
721.5400	2070–0012
721.5425	2070–0012
721.5450	2070–0012
721.5475	2070–0012
721.5500	2070–0012
721.5525	2070–0012
721.5540	2070–0012
721.5545	2070–0012
721.5550	2070–0012
721.5575	2070–0012
721.5600	2070–0038
721.5700	2070–0012
721.5705	2070–0012
721.5710	2070–0038
721.5740	2070–0012
721.5760	2070–0012
721.5763	2070–0012
721.5769	2070–0012
721.5780	2070–0012
721.5800	2070–0012
721.5820	2070–0012
721.5840	2070–0012
721.5860	2070–0012
721.5880	2070–0012
721.5900	2070–0012
721.5910	2070–0012
721.5915	2070–0012
721.5920	2070–0012
721.5930	2070–0012
721.5960	2070–0012
721.5970	2070–0012
721.5980	2070–0012
721.5990	2070–0012
721.6000	2070–0038
721.6020	2070–0012
721.6060	2070–0012
721.6070	2070–0012
721.6080	2070–0012
721.6085	2070–0012
721.6090	2070–0012
721.6097	2070–0012
721.6100	2070–0012
721.6110	2070–0012
721.6120	2070–0012
721.6140	2070–0012
721.6160	2070–0012
721.6180	2070–0012
721.6186	2070–0012
721.6200	2070–0012
721.6220	2070–0012
721.6440	2070–0012
721.6470	2070–0012
721.6500	2070–0012
721.6520	2070–0012
721.6540	2070–0012
721.6560	2070–0012
721.6580	2070–0012
721.6600	2070–0012
721.6620	2070–0012
721.6625	2070–0012
721.6640	2070–0012
721.6660	2070–0012
721.6680	2070–0012
721.6700	2070–0012
721.6720	2070–0012
721.6740	2070–0012
721.6760	2070–0012
721.6780	2070–0012
721.6820	2070–0012
721.6840	2070–0012
721.6880	2070–0012
721.6900	2070–0012
721.6920	2070–0012
721.6940	2070–0012
721.6960	2070–0012
721.6980	2070–0012
721.7000	2070–0012
721.7020	2070–0012
721.7040	2070–0012
721.7046	2070–0012
721.7080	2070–0012
721.7100	2070–0012
721.7140	2070–0012
721.7160	2070–0012
721.7180	2070–0012
721.7200	2070–0012
721.7210	2070–0012
721.7220	2070–0012
721.7240	2070–0012
721.7260	2070–0012
721.7280	2070–0012
721.7300	2070–0012
721.7320	2070–0012
721.7340	2070–0012
721.7360	2070–0012
721.7370	2070–0012
721.7400	2070–0012
721.7420	2070–0012
721.7440	2070–0012
721.7450	2070–0012
721.7460	2070–0012
721.7480	2070–0012
721.7500	2070–0012
721.7540	2070–0012
721.7560	2070–0012
721.7580	2070–0012
721.7600	2070–0012
721.7620	2070–0012
721.7655	2070–0012
721.7660	2070–0012
721.7680	2070–0012
721.7780	2070–0012
721.7710	2070–0012
721.7720	2070–0012
721.7700	2070–0012
721.7740	2070–0012
721.7760	2070–0012
721.7770	2070–0012
721.8075	2070–0012
721.8082	2070–0012
721.8090	2070–0012
721.8100	2070–0012
721.8155	2070–0012
721.8160	2070–0012
721.8170	2070–0012
721.8175	2070–0012
721.8225	2070–0012
721.8250	2070–0012
721.8265	2070–0012
721.8275	2070–0012
721.8290	2070–0012
721.8300	2070–0012
721.8325	2070–0012
721.8335	2070–0012
721.8350	2070–0012
721.8375	2070–0012
721.8400	2070–0012
721.8425	2070–0012

40 CFR citation	OMB control No.
721.8450	2070–0012
721.8475	2070–0012
721.8500	2070–0012
721.8525	2070–0012
721.8550	2070–0012
721.8575	2070–0012
721.8600	2070–0012
721.8650	2070–0012
721.8654	2070–0012
721.8670	2070–0012
721.8673	2070–0012
721.8675	2070–0012
721.8700	2070–0012
721.8750	2070–0012
721.8775	2070–0012
721.8825	2070–0012
721.8850	2070–0012
721.8875	2070–0012
721.8900	2070–0012
721.8965	2070–0012
721.9000	2070–0038
721.9075	2070–0012
721.9100	2070–0012
721.9220	2070–0012
721.9240	2070–0012
721.9260	2070–0012
721.9280	2070–0012
721.9300	2070–0012
721.9320	2070–0012
721.9360	2070–0012
721.9400	2070–0012
721.9420	2070–0012
721.9460	2070–0012
721.9470	2070–0038
721.9480	2070–0012
721.9495	2070–0012
721.9500	2070–0012
721.9505	2070–0012
721.9507	2070–0012
721.9510	2070–0012
721.9520	2070–0012
721.9525	2070–0012
721.9526	2070–0012
721.9527	2070–0012
721.9530	2070–0012
721.9540	2070–0012
721.9550	2070–0012
721.9570	2070–0012
721.9580	2070–0038
721.9620	2070–0012
721.9630	2070–0012
721.9650	2070–0012
721.9656	2070–0012
721.9658	2070–0012
721.9660	2070–0038
721.9665	2070–0012
721.9675	2070–0012
721.9680	2070–0012
721.9700	2070–0012
721.9720	2070–0012
721.9730	2070–0012
721.9740	2070–0012
721.9750	2070–0012
721.9780	2070–0012
721.9800	2070–0012
721.9820	2070–0012
721.9850	2070–0012
721.9870	2070–0012
721.9892	2070–0012
721.9900	2070–0012
721.9920	2070–0012
721.9925	2070–0012
721.9930	2070–0038
721.9940	2070–0012
721.9957	2070–0038
721.9970	2070–0012
721.9975	2070–0012
Premanufacture Notification Exemptions	
723.50	2070–0012
723.175	2070–0012
723.250(m)(1)	2070–0012
Lead-Based Paint Poisioning Prevention in Certain Residential Structures	
Part 745, subpart F	2070–0151
Part 745, subpart L	2070–0155
Part 745, subpart Q	2070–0155
Water Treatment Chemicals	
Part 749, subpart D	2060–0193
749.68	2060–0193
Polychlorinated Biphenyls (PCBs) Manufacturing, Processing, Distribution in Commerce, and Use Prohibitions	
761.20	2070–0008, 2070–0021
761.30	2070–0003, 2070–0008, 2070–0021
761.60	2070–0011
761.65	2070–0112
761.70	2070–0011
761.75	2070–0011
761.80	2070–0021
761.93	2070–0149
761.93(a)(1)(iii)	2070–0149
761.93(b)	2070–0149
761.125	2070–0112
761.180	2070–0112
761.185	2070–0008
761.187	2070–0008
761.193	2070–0008
761.202	2070–0112
761.205	2070–0112
761.207	2070–0112
761.207(a)	2050–0039
761.208	2070–0112
761.209	2070–0112
761.210	2070–0112
761.211	2070–0112
761.215	2070–0112
761.218	2070–0112
Asbestos	
Part 763, subpart E	2070–0091
Part 763, subpart G	2070–0072
Part 763, subpart I	2070–0082
Dibenzo-para-dioxin/Dibenzofurans	
766.35(b)(1)	2070–0054
766.35(b)(2)	2070–0054
766.35(b)(3)	2070–0017
766.35(b)(4)(iii)	2070–0054
766.35(c)(1)(i)	2070–0054
766.35(c)(1)(ii)	2070–0054
766.35(c)(1)(iii)	2070–0017
766.35(d) Form	2070–0017
766.38	2070–0054

40 CFR citation	OMB control No.
Procedures Governing Testing Consent Agreements and Test Rules	
790.5	2070–0033
790.42	2070–0033
790.45	2070–0033
790.50	2070–0033
790.55	2070–0033
790.60	2070–0033
790.62	2070–0033
790.68	2070–0033
790.80	2070–0033
790.82	2070–0033
790.85	2070–0033
790.99	2070–0033
Good Laboratory Practice Standards	
Part 792	2010–0019, 2070–0004, 2070–0017, 2070–0033, 2070–0054, 2070–0067
Provisional Test Guidelines	
795.45	2070–0067
795.232	2070–0033
Identification of Specific Chemical Substance and Mixture Testing Requirements	
799.1053	2070–0033
799.1250	2070–0033
799.1560	2070–0033
799.1575	2070–0033
799.1645	2070–0033
799.1700	2070–0033
799.2155	2070–0033
799.2325	2070–0033
799.2475	2070–0033
799.2500	2070–0033
799.2700	2070–0033
799.3300	2070–0033
799.4360	2070–0033
799.4440	2070–0033
799.5000	2070–0033
799.5025	2070–0033
799.5050	2070–0033
799.5055	2070–0033
799.5075	2070–0033

[1] The ICRs referenced in this section of the table encompass the applicable general provisions contained in 40 CFR part 60, subpart A, which are not independent information collection requirements.

[2] The ICRs referenced in this section of the table encompass the applicable general provisions contained in 40 CFR part 61, subpart A, which are not independent information collection requirements.

[3] The ICRs referenced in this section of the table encompass the applicable general provisions contained in 40 CFR part 63, subpart A, which are not independent information collection requirements.

[58 FR 27472, May 10, 1993]

EDITORIAL NOTE: For Federal Register citations affecting §9.1 see the List of CFR Sections Affected in the Finding Aids section of this volume.

List of CFR Sections Affected

All changes in this volume of the Code of Federal Regulations which were made by documents published in the FEDERAL REGISTER since January 1, 1986, are enumerated in the following list. Entries indicate the nature of the changes effected. Page numbers refer to FEDERAL REGISTER pages. The user should consult the entries for chapters and parts as well as sections for revisions.

Title 40 was established at 36 FR 12213, June 29, 1971. For the period before January 1, 1986, see the ''List of CFR Sections Affected, 1964–1972 and 1973–1985 '' published in six separate volumes.

1986

40 CFR

51 FR Page

Chapter I

86.081–8 Added 24326
86.082–8 Added 24327
86.084–26 (a)(6)(iii) and (d)(2)(ii) revised; interim 24609
86.085–1 (b) revised; interim 24608
86.085–22 (e)(1)(i) revised; interim 24608
86.085–25 (a)(10) revised; interim 24608
86.085–28 (b)(4)(iv) and (c)(4)(iv) revised; interim 24609
86.087–9 (a)(1)(i) revised; interim 24608
86.087–25 (g)(2) revised; interim 24608
86.087–28 (b)(4)(iv) and (c)(4)(iv) revised; interim 24609
86.087–38 (b) and (e) revised; interim 24610
86.088–9 (a)(1)(i) and (iii)(C) revised; interim 24608
86.088–25 (b)(1) and (g)(2) revised; interim 24609
86.088–28 (b)(4)(iv) and (c)(4)(iv) revised; interim 24609
86.091–28 (b)(4)(iv) and (c)(4)(iv) revised; interim 24609
86.113–87 Added; interim 24610
86.513–87 Added; interim 24611
86.609 (a) revised; interim 24611
86.1213–87 Added; interim 24611

40 CFR—Continued

51 FR Page

Chapter I—Continued

86.1310–88 (b)(6)(ii)(E) revised; (b)(6)(ii)(G) and (H) removed; (b)(6)(ii)(I) redesignated as (b)(6)(ii)(G) and revised; interim 24611
86.1313–87 Added; interim 24612
86.1342–84 (c)(3) and (d)(3) revised; interim 24612
86.1513–87 Added; interim 24613
86.1544–84 (a) revised; interim 24613

1987

40 CFR

52 FR Page

Chapter I

86.084–14 (c)(7)(i)(A)(*3*) and (11)(ii)(B)(*13*) revised 47863
86.084–26 (a)(4)(iii) removed; (a)(4)(i) and (ii) revised 47863
86.085–2 Amended 47863
86.085–21 (b) (7) and (8) added 47863
86.087–8 (a)(1) (i), (ii), (iii), and (iv) revised 47863
86.087–9 (a)(1)(iv) and (d)(1)(iii) revised 47864
86.087–21 (b) (7) and (8) added 47864
86.088–9 (a)(1)(iii) and (d)(1)(iii) revised 47864
86.088–10 Heading and (a)(1)(i)(C) and (ii)(C) revised 47864
86.088–11 (a)(1)(iii) revised 47864
86.088–21 (b) (7) and (8) added 47864
86.088–35 (a)(2) heading and (iii)(E) and (d) revised 47864
86.090–9 Added 47865
80.090–10 Added 47867

40 CFR—Continued

52 FR Page

Chapter I—Continued

86.090–11 Added 47867
86.091–21 (b)(1)(ii) (A) introductory text and (B), (5) (i) and (ii) and (6) revised; (b)(5) (iii) and (iv) and (7) added; (b)(4)(iii) removed 47867
86.110–82 (c)(3) revised 47868
86.112–82 (a)(3) revised; (a) (4), (5), and (6) added 47868
86.118–78 (c) revised 47868
86.123–78 (a)(11) revised 47869
86.132–82 (a)(3) revised; (a)(4) added 47869
86.139–82 (d) revised 47869
86.332–79 (b)(11) revised 47869
86.513–87 (a) revised 47869
86.523–78 (a)(11) revised 47870
86.884–7 (a)(1), (2)(v), and (3) (i) and (ii) revised 47870
86.884–12 (a) and (c)(9)(iv) and (11) revised 47870
86.1105–87 (b) introductory text, (1) introductory text, and (2) introductory text revised 47870
86.1308–84 (e)(2)(iii) revised 47870
86.1310–88 (b)(1)(iv)(A), (3)(v)(D), and (6)(ii)(C) revised 47870
86.1312–88 (a)(3) revised; (a) (4) through (8) added 47871
86.1313–87 (a)(1) revised 47871
86.1319–84 (c)(7)(iv) and (e)(2) revised 47871
86.1320–88 (a) (1), (3), (5), and (6) revised; (a)(7) added 47872
86.1321–84 (a)(3) (i) and (ii) revised 47872
86.1327–84 (f)(2)(iii) revised 47872
86.1327–88 (f)(2)(i)(E) revised 47872
86.1330–84 (b)(1) and (f) revised 47872
86.1332–84 (c) (1) and (2) and (e)(1)(i) revised 47872
86.1333–84 (a) introductory text, (b), (d), revised; (a)(3) added 47873
86.1334–84 (a)(2) revised 47874
86.1335–84 (e)(1) revised 47874
86.1336–84 Heading revised; (d) redesignated as (e) and revised; new (d) added 47874
86.1337–84 (a) (10) and (11) revised 47874
86.1337–88 (a)(10) revised 47874
86.1338–84 (a)(1) revised 47874
86.1339–88 (a), (g), and (h)(2) revised 47874

40 CFR—Continued

52 FR Page

Chapter I—Continued

86.1341–84 Revised 47874
86.1342–84 (c)(3) correctly revised; (d)(5) revised 47876
86.1343–88 (b)(8) revised 47876
86 Appendix I amended 47876

1988

40 CFR

53 FR Page

Chapter I

86 Public workshop 3893
Authority citation revised 19134, 43875
86.087–2 Added 43875
86.087–9 (a)(1)(iv) revised; (d)(1)(iv) added 43876
86.088–9 (a)(1)(iv) and (d)(1)(iv) revised 43876
86.090–25 Added 471
86.091–9 Added 43876
86.113–90 Added 475
86.118–78 (c) revised 475
86.513–90 Added 476
86.1105–87 (a) removed; (c) redesignated as (d); new (c) added 43878
86.1113–87 (a)(4), (g)(1) and (3)(i), and (h) revised 19134
86.1213–90 Added 476
86.1313–90 Added 476
86.1513–90 Added 478

1989

40 CFR

54 FR Page

Chapter I

86 Authority citation revised 14455
86.090–1 Added 14459
86.090–2 Added 14459
86.090–3 Added 14460
86.090–5 Added 14460
86.090–8 Added 14461
86.090–9 (a)(1), (b), (d), (e), and (g)(2) revised 14462
86.090–10 Heading, (a) (1) and (3), (b) and (c) revised 14463
86.090–11 (a)(1) and (c) revised; (b) (3) and (4) added 14465
86.090–14 Added 14466
86.090–21 Added 14468
86.090–22 Added 14470
86.090–23 Added 14471
86.090–24 Added 14474
86.090–25 (b)(3), (d)(1)(ii), (e) (2) and (3), and (h) revised 14478

40 CFR—Continued

54 FR Page

Chapter I—Continued

86.090–26 Added 14478
86.090–27 Added 14481
86.090–28 Added 14481
86.090–29 Added 14486
86.090–30 Added 14488
86.090–35 Added 14495
86.091–2 Introductory text revised 14612
86.091–9 (a)(1), (b), (d), (e) and (g)(2) introductory paragraph revised 14612
86.091–10 Heading, (a) (1) and (3), (b), and (c) revised 14464
86.091–11 (a)(1) and (c) revised; (b) (3) and (4) added 14465
86.091–21 (a), (b)(4) (i) and (ii), (5)(ii), (6)(i) (A) and (C), (7) (i) and (ii), (e), and (f) revised 14469
86.091–23 (b)(1)(ii), (2), (3), and (4), (c), (e)(1), and (f) introductory text and (2) revised 14473
86.091–28 (a)(4)(i) introductory text and (C), (ii)(B), (b) (2), (3), (4) and (8), (c) (2), (4) and (7), and (d) (1) and (2) revised 14484
86.091–29 (a)(3)(i), (b)(3)(i), and (c)(1) revised 14488
86.091–30 (a)(1)(ii), (3) (i) and (ii), and (9), (b) (1), (3), (4) introductory text, (ii)(A), (iii) and (iv), (d)(1) (v) through (vii), (2), (3), (5), and (6)(i) revised; (d)(7) added, and (d)(1)(viii) removed 14493
86.091–35 (a) introductory text, (1)(iii) (C) and (D), (2)(iii)(D), (3)(iii) (F), (G), (J), and (K), (4)(i) and (iii)(E), (c)(1) and (g)(1) revised; (h) added 14498
86.094–11 (a)(1) and (c) revised; (b) (3) and (4) added 14466
86.104 (b) revised 14499
86.105 (a) revised 14499
86.106–90 Added 14499
86.107–90 Added 14499
86.109–90 Added 14500
86.110–90 Added 14507
86.111–82 (b)(3) revised 2121
86.111–90 Added 14512
86.113–90 Added 14514
86.114–79 (a)(7) revised 2121
86.116–90 Added 14516
86.117–90 Added 14516
86.119–90 Added 14518

40 CFR—Continued

54 FR Page

Chapter I—Continued

86.121–82 (a) introductory text and (3) and (b) introductory text revised; (a)(4) removed; (a)(5) redesignated as (a)(4) 2122
86.121–90 Added 14525
86.126–90 Added 14527
86.127–90 Added 14527
86.131–90 Added 14527
86.132–90 Added 14527
86.133–90 Added 14528
86.135–90 Added 14529
86.136–90 Added 14530
86.137–90 Added 14530
86.138–90 Added 14532
86.139–90 Added 14532
86.140–82 (b)(4)(ii) revised 2122
86.140–90 Added 14533
86.142–90 Added 14533
86.143–90 Added 14534
86.144–90 Added 14535
86.401–90 Added 14539
86.410–90 Added 14539
86.509–90 Added 14539
86.511–90 Added 14544
86.513–90 (c), (d), and (e) revised; (f), (g), and (h) added 14546
86.516–90 Added 14546
86.519–90 Added 14546
86.521–90 Added 14549
86.526–90 Added 14551
86.527–90 Added 14551
86.535–90 Added 14551
86.537–90 Added 14551
86.540–90 Added 14552
86.542–90 Added 14553
86.544–90 Added 14553
86.601 Redesignated as 86.601–84 2122
86.601–84 Redesignated from 86.601 2122
86.602 Redesignated as 86.602–84 2122
86.602–84 Redesignated from 86.602 2122
86.603 Redesignated as 86.603–88 and (c)(1) revised 2122
86.603–88 Redesignated from 86.603 and (c)(1) revised 2122
86.604 Resignated as 86.604–84 2123
86.604–84 Redesignated from 86.604 2123
86.605 Redesignated as 86.605–88 and (f) removed and (a)(2)(ix) added 2123

40 CFR—Continued

54 FR Page

Chapter I—Continued

86.605–88 Redesignated from 86.605 and (f) removed and (a)(2)(ix) added 2123
86.606 Redesignated as 86.606–84 2123
86.606–84 Redesignated from 86.606..... 2123
86.607 Redesignated as 86.607–84 2123
86.607–84 Redesignated from 86.607..... 2123
86.608 Redesignated as 86.608–88 and (a)(2)(ii) revised and (c) (1), (2), and (3) added 2123
86.608–88 Redesignated from 86.608 and (a)(2)(ii) revised and (c) (1), (2), and (3) added 2123
86.608–90 Added 14557
86.609 Redesignated as 86.609–84 2123
86.609–84 Redesignated from 86.609..... 2123
86.610 Redesignated as 86.610–84 2123
86.610–84 Redesignated from 86.610..... 2123
86.612 Redesignated as 86.612–84 2123
86.612–84 Redesignated from 86.612..... 2123
86.614 Redesignated as 86.614–84 2123
86.614–84 Redesignated from 86.614..... 2123
86.615 Redesignated as 86.615–84 2123
86.615–84 Redesignated from 86.615..... 2123
86.884–1—86.884–14 (Subpart I) Heading revised 14559
86.884–1 Revised 14559
86.884–5 (b) revised 14559
86.884–6 Revised 14559
86.1001–84—86.1015 (Subpart K) Heading revised 2123
86.1001–84—86.1014–84 (Subpart K) Heading revised 14559
86.1001–84 Revised 14559
86.1003–84 Redesignated as 86.1003–88 and (c)(1) revised 2123
86.1003–84 Added 14559
86.1003–88 Redesignated from 86.1003–84 and (c)(1) revised 2123

40 CFR—Continued

54 FR Page

Chapter I—Continued

86.1005–84 Redesignated as 86.1005–88 and (c) and (g) removed; (a)(1)(ii) and (2)(vi) (A), (B), (C), and (D) revised; (a)(2)(viii) added; (d), (e), and (f) redesignated as (c), (d), and (e) and revised; OMB number 2123
86.1005–88 Redesignated from 86.1005–84 and (c) and (g) removed; (a)(1)(ii) and (2)(vi) (A), (B), (C), and (D) revised; (a)(2)(viii) added; (d), (e), and (f) redesignated as (c), (d), and (e) and revised 2123
86.1005–90 Added 14560
86.1008–84 Redesignated as 86.1008–88 and (a)(4)(ii) and (c) revised; (g) (1), (2), (3), and (4) added; OMB number 2124
86.1008–88 Redesignated from 86.1008–84 and (a)(4)(ii) and (c) revised; (g) (1), (2), (3), and (4) added; OMB number 2124
86.1008–90 Added 14560
86.1201–85—86.1243–90 (Subpart M) Heading revised 14562
86.1201–90 Added 14562
86.1205–90 Added 14562
86.1206–90 Added 14562
86.1207–90 Added 14562
86.1213–90 (a) and (c) revised; (d), (e), and (f) added 14563
86.1216–90 Added 14564
86.1217–90 Added 14564
86.1221–90 Added 14566
86.1227–90 Added 14568
86.1231–90 Added 14568
86.1232–90 Added 14568
86.1233–90 Added 14568
86.1238–90 Added 14569
86.1242–90 Added 14570
86.1243–90 Added 14570
86.1301–84—86.1344–90 (Subpart N) Heading revised 14571
86.1301–90 Added 14571
86.1304–90 Added 14571
86.1305–90 Added 14571
86.1306–90 Added 14572
86.1309–90 Added 14572
86.1310–90 Added 14578
86.1311–90 Added 14578
86.1313–90 Revised 14589
86.1316–90 Added 14591
86.1319–90 Added 14591
86.1320–90 Added 14593

40 CFR—Continued

54 FR Page

Chapter I—Continued

86.1321–90 Added 14594
86.1326–90 Added 14596
86.1327–90 Added 14596
86.1330–90 Added 14597
86.1332–90 Added 14597
86.1333–90 Added 14599
86.1335–90 Added 14600
86.1337–90 Added 14600
86.1339–90 Added 14602
86.1340–90 Added 14602
86.1341–90 Added 14604
86.1342–90 Added 14605
86.1343–88 Heading revised..... 14610
86.1344–90 Added 14610
86.1501–84—86.1544–84 (Subpart P) Heading revised 14611
86.1501–90 Added 14611
86.1504–90 Added 14611
86.1505–90 Added 14611
86.1506–90 Added 14612
86 Appendix I amended..... 14612

1990

40 CFR

55 FR Page

Chapter I

86.090–2 Revised 30612
86.090–3 Revised 30613
86.090–7 Added 30613
86.090–10 (a)(1)(i)(C), (ii)(C), (iii)(C), and (iv)(C) revised..... 30616
86.090–11 (a)(1)(iii) and (iv) revised..... 30616
86.090–15 Added 30616
86.090–21 (b)(5)(iii) added 30618
86.090–23 (h) and (i) added 30618
86.090–24 (a)(16) and (17) added..... 30618
86.090–30 (a)(1)(i), (10), (11), (b)(3), (c)(1)(iii) introductory text, (iv), and (4) revised 30618
86.090–35 (a)(3)(iii)(L) and (M) added..... 30619
86.091–2 Revised 30619
86.091–7 Added 30619
86.091–9 (a)(1)(iii)(C) and (iv)(C) revised 46627
86.091–10 (a)(1)(i)(C)(*2*), (ii)(C)(*2*), (iii)(C)(*2*), (iv)(C)(*2*) revised 30622
86.091–11 (a)(1)(iii)(B) and (iv)(C) revised 30622
86.091–15 Added 30622
(g)(2) and (3) revised..... 46628
86.091–21 (b)(6)(i)(A), (B), (ii)(A), (ii)(B) revised; (b)(6)(iii) added..... 30625

40 CFR—Continued

55 FR Page

Chapter I—Continued

86.091.23 (f) and (g) revised; (h), (i), (j), and (k) added 30625
86.091–30 (a)(1)(i), (10), (11), (b)(3), (c)(1)(iii) introductory text, (iv), and (4) revised 30625
86.091–35 (a)(3)(iii)(L) and (M) revised..... 30626
(a)(3)(iii)(N) added 46628
86.092–1 Added 7187
86.092–2 Added 7187
86.092–14 Added 7187
86.092–24 Added 7190
(a)(16) added..... 30626
86.092–26 Added 7194
86.092–35 Added 7197
(a)(3)(iii)(L) and (M) revised 30627
86.094–11 (a)(1)(iv)(B) revised..... 30627
86.094–15 Added 30627
86.113–91 Added 34144
86.113–94 Added 34146
86.1102–87 (b) revised 46628
86.1104–90 Added 30629
86.1104–91 Added 30629
86.1105–87 (c) and (d) revised 46628
86.1106–87 (a)(2) revised 46629
86.1113–87 (a)(3)(iv), (6), (g)(3) introductory text and (i) revised; (g)(5) and (6) added 46629
86.1115–87 (z) removed; new (z) redesignated from (aa) 46630
86.1313–91 Added 34147
86.1313–94 Added 34149

1991

40 CFR

56 FR Page

Chapter I

86 Heading revised; eff. 7-5-91..... 25738
Authority citation revised 64711
86.078–3—86.097–9 (Subpart A) Heading revised; eff. 7-5-91..... 25738
86.091–11 (a)(1)(iv)(A) revised; (a)(1)(iv)(B) removed 64711
86.091–23 (c)(2)(ii) added 64711
86.093–11 Added 64711
86.094–2 Added; eff. 7-5-91 25739
86.094–3 Added; eff. 7-5-91 25740
86.094–7 Added; eff. 7-5-91 25740
86.094–8 Added; eff. 7-5-91 25740
86.094–9 Added; eff. 7-5-91 25742
86.094–21 Added;eff. 7-5-91 25747
86.094–23 Added; eff. 7-5-91..... 25748
86.094–30 Added; eff. 7-5-91..... 25749
86.094–35 Added; eff. 7-5-91..... 25750
86.095–14 Added; eff. 7-5-91..... 25751
86.095–24 Added; eff. 7-5-91..... 25752

40 CFR—Continued

56 FR Page

Chapter I—Continued

86.095–26 Added; eff. 7-5-91 25752
86.095–30 Added; eff. 7-5-91 25753
86.095–35 Added; eff. 7-5-91 25755
86.096–8 Added; eff. 7-5-91 25756
86.097–9 Added; eff. 7-5-91 25757
86.105 Revised; eff. 7-5-91 25761
86.106–94 Added; eff. 7-5-91 25760
86.109–94 Added; eff. 7-5-91 25760
86.110–94 Added; eff. 7-5-91 25767
86.111–94 Added; eff. 7-5-91 25771
86.112–91 Added; eff. 7-5-91 25773
86.114–94 Added; eff. 7-5-91 25773
86.116–94 Added; eff. 7-5-91 25774
86.125–94 Added; eff. 7-5-91 25774
86.127–94 Added; eff. 7-5-91 25774
86.129–94 Added; eff. 7-5-91 25775
86.135–94 Added; eff. 7-5-91 25775
86.137–94 Added; eff. 7-5-91 25776
86.140–94 Added; eff. 7-5-91 25777
86.144–94 Added; eff. 7-5-91 25777
86.701–94—86.709–99 (Subpart H) Added; eff. 7-5-91 25781
86.1105–87 (c) and (d) revised; (e) added 64712

1992

40 CFR

57 FR Page

Chapter I

86.091–28 (e) added 31897
86.094–2 Amended 31897
86.094–7 (h) revised; OMB number 31897
86.094–8 (b) through (h) revised; (k) added 31898
86.094–9 (k) added 31899
86.094–11 (a)(1)(iii) revised 19538
86.094–16 Added 31900
86.094–21 (a) through (b)(1) and (b)(5)(i)(C) through (b)(7) revised; (g) added 31900
86.094–22 Added 31902
86.094–24 Added 31903
86.094–35 (a) introductory text through (a)(1)(iii)(E), (a)(2)(iii)(L) through (a)(3)(iii)(H), (a)(3)(iii)(J) through (b), (d)(2) through (h) revised; (a)(1)(iii)(k) added 31907
86.095–24 (a) through (b)(1)(iv), (b)(2) through (h) revised; (b)(1)(xi) added 31909

40 CFR—Continued

57 FR Page

Chapter I—Continued

86.095–35 (a) introductory text through (a)(1)(iii)(E), (a)(2)(iii)(L) through (a)(3)(iii)(H), (a)(3)(iii)(J) through (b) and (d)(2) through (h) revised; (a)(1)(iii)(L) and (a)(2)(iii)(K) added 31913
86.096–8 (b) through (h) revised; (k) added 31915
86.097–9 (k) added 31916
86.113–91 (b)(2) revised 19538
86.113–94 (b)(2) revised 19538
86.201–94—86.246–94 (Subpart C) Added 31916
86.608–90 (a) introductory text and (1) revised; (a)(3) added 31921
86.614–84 (b)(5), (o)(2), (s)(1), (2), (t)(1), (3)(iv), (4), (5), (u)(2), (5), (v)(1), (2), (w)(1) through (4), (z)(1) and (2) revised; (o)(3), (x) and (aa)(1) amended 5330
86.615–84 (d) revised 5332
86.701–94 Revised 31922
86.708–94 (b) revised 31922
86.709–94 (b) revised 31922
86.709–99 (b) revised 31922
86.901–93—86.911–93 (Subpart J) Added 30055
86.1005–90 (a)(1)(ii) amended; (a)(1)(iii) and (a)(2)(vi)(c) revised 31922
86.1008–90 (a)(2) revised; (a)(5) added 31922
86.1009–84 (a) and (c)(1) revised 31923
86.1014–84 (b)(5), (o)(2), (s)(1), (2) introductory text, (i), (ii), (t)(1), (3)(iv), (4), (5), (u)(2), (5), (v)(1), (2), (w)(1) through (4), (x)(1), (z)(1) and (2) revised; (o)(3), (x)(2) and (aa)(1) amended 5332
86.1015 (d) revised 5333
Correctly designated 30657
86.1115–87 (b)(5), (o)(2), (s)(1), (2), (t)(1), (3)(iv), (4), (5), (u)(1), (2), (v)(1) through (4), (y)(1) and (2) revised; (o)(3), (w) and (z)(1) amended 5333
86.1116–87 (d) revised 5334
86.1313–91 (b)(2) revised 19538

1993

40 CFR

58 FR Page

Chapter I

86 Authority citation revised...4002, 16019
Meeting 13413
Public workshop....19211
OMB number 34370
86.1 Added 16019
(b)(1) table amended 58417
86.091–29 (a)(3)(i) and (c)(3)(i) revised....16020
86.093–2 Added 15795
86.093–11 (a)(1)(iv)(A) and (C) revised....15795
86.093–35 Added 15795
86.094–1 Added 4002
86.094–2 Amended....4002, 9485, 15799
86.094–3 (b) amended; eff. 7–16–93....33208
86.094–11 (a)(1)(iv) revised 15799
86.094–13 Added 4002
86.094–14 Added 4006
86.094–17 Added 9485
86.094–18 Added 9486
86.094–21 Revised 4009
(h) and (i) added 9487
86.094–22 Revised 4010
86.094–23 Revised 4012
(l)(2)(v) amended; eff. 7–16–93 33208
(c)(2)(i) revised 66294
86.094–24 Revised 4014
86.094–25 Added 4018
(d)(2)(i) amended; (d)(2)(iii) added 9487
86.094–26 Added 4021
86.094–28 Added 4025
86.094–30 Revised 4028
(f) added 9487
86.094–35 (a)(2)(iii)(F) and (c)(1)(ii)(B)(*2*) removed 4035
(i) added 9487
(a)(3)(iii)(O) added 15799
(a)(1)(iii)(L) added; (a)(2) heading and (iii)(C) revised; eff. 7–16–93....33209
86.095–14 Revised 4035
86.095-23 Added 66294
86.095–24 Revised 4035
86.095–26 Revised 4036
86.095–30 Revised 4037
(f) added 9487
86.095–35 (a)(2)(iii)(F) and (c)(1)(ii)(B)(*2*) removed 4037
(i) added 9487
(a)(3)(iii)(O) added 15799
(a)(2)(iii)(C) revised 16020

40 CFR—Continued

58 FR Page

Chapter I—Continued

(a)(1)(iii)(J) and (2)(iii)(C) revised; eff. 7–16–93....33209
(a)(2)(iii)(C) revised; eff. 7–28–93 34536
86.096–2 Added 16020
Amended 58417
86.096-3 Added....58417
86.096–7 Added 16021
(h)(6)(i) revised; eff. 7–28–93....34535
86.096–8 (b) revised 16021
Introductory text removed; (k) heading revised; eff. 7–28–93 34536
(a)(1)(iii) and (3) added....58417
86.096–9 Added 16021
(a)(1)(v) and (3) added....58417
86.096–10 Added 16022
86.096–11 Added 15799
86.096–14 Added 16023
86.096–21 Added 16023
Amended; eff. 7–16–93 34536
(j) and (k) added....58417
86.096–23 Added 16023
Introductory text and (a) through (l) revised....66297
86.096-24 Added 58417
86.096–26 Added 16024
86.096–30 Added 16024
Amended; (a)(18) added; eff. 7–28–93....34536
86.096–35 Added 16024
Amended; eff. 7–28–93 34536
(a)(1)(iii)(N) and (2)(iii)(P) added 58421
86.097–9 (b) revised 16025
(a)(1)(iv) and (3) added 58421
86.098–2 Added 15800
86.098–10 Added 15800
86.098–11 Added 15801
(b)(3) revised; (b)(4) removed; eff. 7–28–93....34536
86.098–23 Added 16025
(m)(1), (2)(iv) and (v) revised; eff. 7–28–93....34536
Introductory text and (a) through (l) revised....66297
86.099–8 Added 16025
(a)(1)(iii) and (3) added....58421
86.099–9 Added 16025
(a)(1)(iv) and (3) added 58422
86.099–10 Added 16026
86.099–11 Added; eff. 7–28–93 34537
86.105 (b) revised 16026
86.106–96 Added 16026
86.107–78 Removed 16019
86.107–96 Added 16027

40 CFR—Continued

58 FR Page

Chapter I—Continued

86.111–94 (a) Figure B94–7 amended; eff. 7–16–93 33209
86.113–82 Removed 16019
86.113–87 Removed 16019
86.113–90 Removed 16019
86.113–94 (a)(1) table amended 16030
86.115–78 (a) and (b) revised 16030
86.116-94 (c)(5) added; (d)(1) removed 58422
86.117–78 Removed 16019
86.117–96 Added 16030
86.123-78 (a) introductory text revised 58422
86.127–82 Removed 16019
86.127–96 Added 16032
86.128–79 (c) revised 16033
86.129–94 Heading revised; (d) added 16033
86.130–96 Added 16034
86.131–78 Removed 16019
86.131–96 Added 16037
86.132–82 Removed 16019
86.132–96 Added 16037
86.133–78 Removed 16019
86.133–96 Added 16039
86.134–96 Added 16040
86.135–82 Removed 16019
86.136–82 Removed 16019
86.136–90 (c) revised 16042
86.137–82 Removed 16019
86.137–96 Added 16042
86.138–78 Removed 16019
86.138–90 (i) revised 16042
86.138–96 Added 16042
86.142-90 (d) through (i), (k), (l), (m), (o) and (p) revised; (q) and (r) removed 58422
86.143–78 Removed 16019
86.143–96 Added 16043
86.146–96 Added 16045
86.301-79—86.348-79 (Subpart D) Heading revised 58422
86.319-79 (b) revised 58422
86.332-79 (a) revised; (d) and (e) removed 58423
86.516-90 (c)(3) added; (d)(1) removed 58423
86.523-78 (a) introductory text revised 58423
86.608–90 (a)(2)(ii), (iv) and (vi) revised 16045
86.608-96 Added 58423
86.609–84 (a), (b) and (c) revised 16045
86.609-96 Added 58423
86.610–84 (b) revised 16046

40 CFR—Continued

58 FR Page

Chapter I—Continued

86.610-96 Added 58424
86.708–94 Table H94–1 amended; (a)(1)(i)(A) revised; eff. 7–16–93 33211
(a)(1)(iii) and (3) added 58424
86.708-98 (a)(1)(iii) and (3) added 58424
86.709–94 Tables H94–10 and H94–15 amended; eff. 7–16–93 33211
(a)(1)(v) and (3) added 58424
86.709-99 (a)(1)(iv) and (3) added 58425
86.1001–84—86.1014–84 (Subpart K) Heading revised 16046
86.1008–90 (a)(1), (3)(ii), (iv), and (vi) revised 16046
86.1008-96 Added 58425
86.1009–84 (a), (b) and (c)(3) revised; (c)(4) added 16046
86.1009-96 Added 58425
86.1010–84 (b) and (c) revised 16047
86.1010-96 Added 58426
86.1105–87 (d)(1) introductory text revised 15802
(e) revised; (f) added 68540
86.1106-87 (a)(2) revised 68540
86.1201–85 Removed 16019
86.1205–85 Removed 16019
86.1205–90 (b) revised 16047
86.1206–85 Removed 16019
86.1206–96 Added 16047
86.1207–85 Removed 16019
86.1207–96 Added 16047
86.1213–85 Removed 16019
86.1213–87 Removed 16019
86.1215–85 (a) amended; (b) revised; (c) removed 16050
86.1216–85 Removed 16019
86.1217–85 Removed 16019
86.1217–96 Added 16050
86.1221–85 Removed 16019
86.1227–85 Removed 16019
86.1227–96 Added 16052
86.1229–85 Heading revised; (c) and (d) added 16053
86.1230–96 Added 16054
86.1231–85 Removed 16019
86.1231–96 Added 16056
86.1232–85 Removed 16019
86.1232–96 Added 16056
86.1233–85 Removed 16019
86.1233–96 Added 16057
86.1234–85 Removed 16019
86.1234–96 Added 16059
86.1235–96 Added 16060
86.1236–85 (a)(4) revised 16060

40 CFR—Continued

58 FR Page

Chapter I—Continued

86.1237–96 Added 16061
86.1238–85 Removed..... 16019
86.1238–90 (i) revised..... 16061
86.1238–96 Added 16061
86.1242–85 Removed..... 16019
86.1243–85 Removed..... 16019
86.1243–96 Added 16062
86.1246–96 Added 16063
86.1301–84 Removed..... 16019
86.1301–88 Removed..... 16019
86.1304–84 Removed..... 16019
86.1305–84 Removed..... 16019
86.1306–84 Removed..... 16019
86.1306–88 Removed..... 16019
86.1306–96 Added 16064
86.1313–84 Removed..... 16019
86.1313–87 Removed..... 16019
86.1313–90 Removed..... 16019
86.1313–91 (b)(2) revised 21401
86.1316–84 Removed..... 16019
86.1316-90 (b)(3) added and (c)(1) removed 58426
86.1320–88 Removed..... 16019
86.1321–84 Removed..... 16019
86.1323-84 (a) introductory text revised 58426
86.1326–84 Removed..... 16019
86.1327–84 Removed..... 16019
86.1327–88 Removed..... 16019
86.1327–96 Added 16064
86.1332–84 Removed..... 16019
86.1333–84 Removed..... 16019
86.1336–84 (e) revised 16065
86.1337–84 Removed..... 16019
86.1337–88 Removed..... 16019
86.1337–96 Added 16065
86.1339–88 Removed..... 16019
86.1340–84 Removed..... 16019
86.1401—86.1442 (Subpart O) Added 58426
86 Appendix I amended..... 16067
Appendix II added..... 16070

1994

40 CFR

59 FR Page

Chapter I

86 Court order..... 51114
86.1 (b)(1) table revised; (b)(3) added..... 48491
(b)(2) table amended 50073
86.001–2—86.099–11 (Subpart A) Heading revised 48491
86.001–2 Added 16281
86.001–9 Added 16282
(d)(1)(iii) and (iv) added 48491

40 CFR—Continued

59 FR Page

Chapter I—Continued

86.001–21 Added 16282
86.001–22 Added 16283
86.001–23 Added 16283
86.001–24 Added 16283
86.001–25 Added 16283
86.001–26 Added 16284
86.001–28 Added 16284
(h) added..... 48491
86.001–30 Added 16285
86.001–35 Added 16285
86.004–9 Added 16286
(d)(1)(iii) and (iv) added 48492
86.004–28 Added 16286
(h) added..... 48492
86.004–30 Added 16287
86.084–4 (b) redesignated as (c); new (b) added 48492
86.085–37 (b)(1) introductory text revised 50073
86.091–10 (a)(1) introductory text, (i) introductory text, (B)(*2*), (ii) introductory text, (B)(*2*) and (3) revised; (a)(1)(i)(C)(*3*), (ii)(C)(*3*), (v) and (vi) added..... 48492
86.091–28 (a)(4)(i) introductory text, (C), (ii)(B), (7)(i), (b)(4)(ii), (iii), (6)(i), (c)(4)(ii), (iii)(A)(*1*), (*2*), (B)(*1*), (*2*) and (d)(1) revised..... 48493
86.092–1 (a) revised 48494
86.092–15 Added 14106
86.092–23 Added 14108
86.094–2 Amended..... 48494
86.094–3 (b) revised 48494
86.094–8 (a)(1)(i) introductory text, (A) Tables A94–2, A94–3, A94–5 and A94–6 revised 48494
86.094–9 (a)(1)(i)(A) Tables A94–8, A94–9, A94–11, A94–12, (ii)(A) Table A94–14 and Table A94–15 and (d)(1)(i)(A) revised; (d)(1)(i)(C) added 48495
86.094–11 Heading, (a)(1) introductory text, (i)(A), (ii)(B), and (c) revised; (a)(1)(i)(C) added 48497
86.094–13 (a)(1), (c)(1), (d)(1), (e)(1) and (f)(1) amended..... 36369
86.094–15 (a)(2)(iii) and (b)(6)(ii) revised 14110
(a)(1) revised 50073
86.094–17 (a) introductory text revised..... 48497
86.094–23 (h)(3)(iv) revised..... 14110
(b)(3), (4), (c)(1) and (2)(i) revised 48498

40 CFR—Continued

59 FR Page

Chapter I—Continued

86.094–24 (a)(5), (6) introductory text, (12), (13) introductory text, (14) introductory text and (15) revised; (a)(6)(iv) and (13)(iii) added (13) 48498
(a)(3)(iii) added; (a)(4) introductory text revised 50073
86.094–26 (a)(2), (b)(2)(i) and (ii) amended 36369
86.095–23 (h)(3)(iv) revised 14110
86.095–35 (a)(4) heading, (i), (iii)(D), (E), (c)(1)(ii)(A), (B)(*1*) and (g)(1) revised 48499
86.096–8 (a)(1)(i), Table A96–1, Table A96–2 and (b)(1) revised 48499
86.096–9 (b)(1) heading, (i)(A) introductory text, (B)(*2*), (ii) and (iii) revised 48500
86.096–10 (b)(1) heading, (i)(A)(*2*), (B), (C), (ii)(A)(*2*) and (B) revised 48500
86.096–11 (b)(4) redesignated as (b)(5); heading, (a)(1)(i), (2)(ii), (c), and new (b)(5) revised; (a)(1)(iii) and new (b)(4) added 48500
86.096–21 (j) and (k) corrected 33913
86.097–9 (a)(1)(i)(A) Table A97–1, Table A97–2, (ii)(A) Table 97–3 and 97–4 revised 48500
86.098–2 Revised 16288
Amended 48501
86.098–3 Added 16288
86.098–7 Added 16288
86.098–8 Added 16289
(d)(1)(iii) and (iv) added 48501
86.098–10 (a)(1)(i) introductory text, (B)(*2*), (ii) introductory text, (B)(*2*), (3)(i) and (ii) revised; (a)(1)(i)(C)(*3*), (ii)(C)(*3*), (v) and (vi) added 48501
86.098–11 Heading, (a)(1)(i), (2)(ii) and (c) revised; new (a)(1)(iii) and (b)(4) added 48502
86.098–14 Added 16289
86.098–17 Added 16289
86.098–21 Added 16290
86.098–22 Added 16290
86.098–23 Introductory text and (a) through (l) revised 16290
86.098–24 Added 16290
86.098–25 Added 16291
86.098–26 Added 16291
86.098–28 Added 16292

40 CFR—Continued

59 FR Page

Chapter I—Continued

(h) added 48503
86.098–30 Added 16293
86.098–35 Added 16294
86.099–8 (b)(5), (6) and (d) added; (c) and (e) through (k) revised 16294
(b)(1) revised; (d)(1)(iii) and (iv) added 48503
86.099–9 (b)(1) heading, (i)(A) introductory text, (B)(*2*), (ii) and (iii) revised 48503
86.099–10 (b)(1) heading, (i)(A)(*2*), (B), (C), (ii)(A)(*2*) and (B) revised 48503
86.099–11 (a)(1)(i), (2)(ii) and (c) revised; (a)(1)(iii) and (b)(4) added 48503
86.101 (a)(3) added 16295
(a)(3) revised 48504
86.104 (b) redesignated as (c) and revised; new (b) added 48504
86.105 (b) revised 16295
(b) revised 48504
86.106–94 (a) revised 48504
86.106–96 (a) revised 48504
86.107–96 (b)(1) revised 48505
(b)(4) and (c)(4) revised 48505
86.107–98 Added 16295
86.110–94 (a)(2), (b) heading, introductory text and (3) revised; (a)(6) and (7) redesignated as (a)(7) and (8); new (a)(6) added 48505
86.111–94 (b)(3) introductory text and (v) revised 48505
(b)(3)(vii) added 50073
86.113–94 Revised 48506
86.115–78 (b)(3)(ii) and (5) revised 16296
86.116–94 Correctly designated 33913
86.121–90 (a)(2) and (b)(3) revised; (d) added 48508
86.127–96 (a)(1), (3), (4), (b), (d) introductory text, (2) and (e) revised 48508
86.129–94 (a) amended 39649
86.130–96 (a) and (b) revised 48509
86.132–90 (a)(4) introductory text and (ii) introductory text revised 48509
86.132–96 (h) introductory text, (j) introductory text, (1)(i) and (viii) revised 16296
(b), (e)(2) heading, introductory text and (f) revised 48509

40 CFR—Continued

59 FR Page

Chapter I—Continued

86.133–96 (a)(1) and (3) revised 48509
86.134–96 (a) revised 48509
86.135–94 (a) revised 48510
86.136–90 (a) heading, introductory text and (b) revised 48510
86.138–96 (a) revised 48510
86.140–94 (a) introductory text and (b) introductory text revised 48510
86.142–90 (o) introductory text revised; (q) and (r) added 48510
86.143–96 (a) and (b)(1)(ii)(B) revised 48510
86.144–90 (c)(7)(ii) amended 39649
86.144–94 (c)(7)(ii) amended 39649
(c)(7)(iii) through (xiii) redesignated as (c)(7)(iv) through (xiv); (a)(1), (c)(1)(ii), (3)(iv)(C), (5)(ii), (6)(ii), new (7)(iv) through (xiv), (8)(i) and (ii) revised; (b)(10), (c)(7)(iii), (8)(vi) and (9) added 48510
86.150–98 Added 16296
Heading revised; (d) added 48511
86.151–98 Added 16296
86.152–98 Added 16298
86.153–98 Added 16298
86.154–98 Added 16299
86.155–98 Added 16300
86.156–98 Added 16300
86.157–98 Added 48511
86.401–97 Added 48512
86.410–90 (a)(1) introductory text revised 48512
(c)(4) revised 48512
86.513–94 Added 48512
86.521–90 (b) introductory text, (2) and (c)(3) revised; (e) added 48514
86.527–90 (a), (c) and (d) revised 48514
86.540–90 (a) introductory text revised 48515
86.542–90 (q) and (r) added 48515
86.544–90 (c)(1)(ii), (v), (ix), (3)(iv)(C) and (7)(ii) revised 48515
86.602–98 Added 16300
86.603–98 Added 16300
86.605–98 Added 16301
86.608–98 Added 16301
86.609–98 Added 16303
86.610–98 Added 16304
86.708–94 Technical correction 33913

40 CFR—Continued

59 FR Page

Chapter I—Continued

(a)(1)(i)(A)(*3*) Tables H94–3, H94–4, H94–6 and H94–7 revised 48515
86.708–98 Technical correction 33913
(a)(1)(i) Table H98–1 and Table H98–2 revised 48516
86.709–94 (a)(1)(i)(A)(*3*) Tables H94–9, H94–10, H94–12, H9413, (ii)(A)(*2*) Table H94–15, Table H94–16 and Table H94–18 revised 48516
86.709–99 (a)(1)(i)(A) Table H99–1, H99–2, (ii)(A) Table H99–3 and H99–4 revised 48520
86.884–1 Revised 48521
86.884–4 Amended 48521
86.1002–2001 Added 16304
86.1003–2001 Added 16305
86.1008–2001 Added 16305
86.1009–2001 Added 16308
86.1010–2001 Added 16309
86.1201–90—86.1246–96 (Subpart M) Heading revised 48521
86.1201–90 (a) revised 48521
86.1204 Added 48521
86.1205–90 (a) revised 48521
86.1206–96 Introductory text revised 48521
86.1207–96 (b)(1) revised 48521
86.1213–94 Added 48521
86.1221–90 (a) introductory text, (2) and (b)(3) revised; (e) added 48523
86.1227–96 Heading, (b) introductory text and (2) revised 48523
86.1230–96 (a) and (b) revised 48524
86.1232–96 (b) and (f) revised 48524
86.1233–96 (a)(1) and (3) revised 48524
86.1234–96 (a) revised 48524
86.1238–96 (a) revised 48524
86.1242–90 (m) and (n) added 48524
86.1243–96 (a) and (b)(1)(ii)(B) revised 48525
86.1306–90 (a) revised 48525
86.1306–96 (a) revised 48525
86.1309–90 Heading, (a)(1) and (b)(4) revised 48525
86.1310–90 Heading, (a) introductory text and (2) revised 48525
86.1311–94 Added 48525
(b)(2)(iii) added 50073
86.1313–94 Revised 48528
86.1314–94 Added 48530
86.1316–94 Added 48530
86.1321–94 Added 48531
86.1325–94 Added 48531

40 CFR—Continued

59 FR Page

Chapter I—Continued

86.1327–94 Added 48532
86.1327–96 (a), (f)(1) and (2) introductory text revised 48533
86.1332–90 (c)(1) heading, (2) heading, (d)(2) heading, (3) heading, (e)(1) heading and (2) heading revised 48533
86.1336–84 (e)(2) heading revised..... 48533
86.1337–90 (a)(7), (8), (13), (20) and (26) revised..... 48533
86.1337–96 (a)(7), (8), (13), (20) and (26) revised..... 48533
86.1340–94 Added 48534
86.1342–94 Added 48534
86.1344–94 Added 48535
86.1406 (b) corrected 33913
86.1430 (a)(7)(ii) and (c)(3)(ii) corrected..... 33913
86.1437 (c) corrected 33913
86.1438 (c) corrected 33913
86.1439 (d) corrected 33913
(d)(1)(i), (ii)(B), (2)(i) and (f)(1)(ii)(A) corrected 33914
86.1501–84—86.1544–84 (Subpart P) Heading revised 48536
86.1501–94 Added 48536
86.1504–94 Added 48536
86.1505–94 Added 48536
86.1506–94 Added 48536
86.1513–94 Added 48536

1995

40 CFR

60 FR Page

Chapter I

86.078–7 Removed..... 43886
86.081–8 Removed..... 43886
86.082–8 Removed..... 43886
86.082–14 Removed 43886
86.083–30 Removed 43886
86.084–5 Removed..... 43886
86.084–14 Removed 43886
86.084–15 Removed 43886
86.084–26 Removed 43886
86.085–8 Removed..... 43886
86.085–9 Removed..... 43886
86.085–10 Removed 43886
86.085–11 Removed 43886
86.085–21 Removed 43886
86.085–22 Removed 43886
86.085–23 Removed 43886
86.085–24 Removed 43886
86.085–25 Removed 43886
86.085–27 Removed 43886
86.085–28 Removed 43886

40 CFR—Continued

60 FR Page

Chapter I—Continued

86.085–29 Removed 43886
86.085–30 Removed 43886
86.085–35 Removed 43886
86.085–38 Removed 43886
86.087–8 Removed..... 43886
86.087–9 Removed..... 43886
86.087–10 Removed 43886
86.087–21 Removed 43886
86.087–23 Removed 43886
86.087–25 Removed 43886
86.087–28 Removed 43886
86.087–29 Removed 43886
86.087–30 Removed 43886
86.087–35 Removed 43886
86.088–9 Removed..... 43886
86.088–11 Removed 43886
86.088–21 Removed 43886
86.088–23 Removed 43886
86.088–25 Removed 43886
86.088–28 Removed 43886
86.088–29 Removed 43886
86.088–30 Removed 43886
86.088–35 Removed 43886
86.090–2 Amended; eff. 7–31–95 34334
86.090–3 (b) amended; eff. 7–31–95..... 34335
86.090–7 Removed..... 43886
86.090–10 Removed 43886
86.090–11 Removed 43886
86.090–15 Removed 43886
86.090–23 Removed 43886
86.090–28 Removed 43886
86.090–29 Removed 43886
86.090–30 Removed 43886
86.090–35 Removed 43886
86.094–2 Amended; eff. 7–31–95 34335
Amended 40496
86.094–3 (b) amended; eff. 7–31–95..... 34335
86.094–9 (a)(1)(iii) revised; eff. 7–31–95 34335
86.094–17 (b)(1), (e)(2), (f)(3), (i) and (j) revised 15246
(j) revised 37945
(d) revised..... 39266
86.094–18 Removed 15247
86.094–21 (j) added; eff. 7–31–95..... 34335
86.094–30 (f)(4) revised 15247
86.094–38 Added (OMB number) 40496
86.095–30 (f)(4) revised 15247
86.096–7 OMB number 43880
86.096–8 OMB number 43880
(b) introductory text revised; (b)(5)(iv) added..... 43887

40 CFR—Continued

60 FR Page

Chapter I—Continued

86.096–9 OMB number 43880
(b) introductory text and (c) through (k) revised; (b)(5)(iv) added 43887
86.096–10 OMB number 43880
(b) introductory text revised; (b)(5)(iv) added 43887
86.096–11 (b)(5)(i) revised 43887
86.096–14 OMB number 43880
86.096–21 (c) through (i) removed; (j) and (k) redesignated as (k) and (l); new (c) through (j) added; eff. 7–31–95 34335
OMB number 43880
86.096–23 OMB number 43880
86.096–26 OMB number 43880
86.096–30 OMB number 43880
86.096–35 OMB number 43880
86.097–9 (a)(1)(iii) revised; eff. 7–31–95 34335
OMB number 43880
86.098–7 (h)(1) through (5) added 43888
86.098–11 (b)(3)(iii)(A) revised 43888
86.098–21 (c) through (k) removed; new (c) through (l) added; eff. 7–31–95 34335
86.098–23 OMB number 43880
86.098–26 (a)(3)(i)(B) through (ii)(B) removed; (a)(3)(i)(D) through (ii)(B) added 43888
86.099–8 OMB number 43880
(b) introductory text revised 43888
86.099–9 OMB number 43880
(b) introductory text revised 43888
86.099–10 OMB number 43880
(b) introductory text revised 43888
86.099–11 (b)(3)(iii)(A) revised 43888
86.106–82 Removed 43886
86.106–96 (a) introductory text revised 43888
86.107–90 (a)(2)(i) revised; (a)(2)(iii) added; eff. 7–31–95 34335
86.107–96 (b)(1) revised; (b)(3) added; eff. 7–31–95 34335
(a)(1) introductory text, (ii)(A), (B), (2), (3)(i), (ii), (c)(1), (d), (e) and (f) revised 43888
86.107–98 (e)(1) revised 43890
86.109–82 Removed 43886

40 CFR—Continued

60 FR Page

Chapter I—Continued

86.109–94 (a)(2)(i) through (iv), (3) introductory text, (4) introductory text, (5), (b) introductory text, (4), (5), (6), (c) introductory text, (4), (5), (6), Figure B94–2 and Figure B94–3 revised; (a)(6) and (d) added; eff. 7–31–95 34336
86.110–82 Removed 43886
86.110–94 (a)(1) introductory text, (5)(i), (ii), (iii), (b) introductory text, (1), (2), (c) and (d) revised; eff. 7–31–95 34340
86.111–82 Removed 43886
86.112–82 Removed 43886
86.113–94 (d) revised; eff. 7–31–95 34342
86.114–94 (a)(2), (5), (b) and (c) revised; (d) added; eff. 7–31–95 34342
86.116–82 Removed 43886
86.116–94 (c)(1) and (3) revised; (g) added; eff. 7–31–95 34342
86.117–90 (c) heading, introductory text, (5), (7), (9), (d)(1) and (2)(iii) revised; eff. 7–31–95 34342
86.117–96 (c) heading, introductory text, (1)(vii), (ix), (xii), (d)(1) and (2)(iii) revised; eff. 7–31–95 34343
Introductory text, (a)(1)(ii), (iii), (7), (b), (c) heading, (1) introductory text, (iv), (v), (vii), (d)(1) introductory text and equation, (v) and (e)(1)(iii) revised; (d)(1)(iii) and (iv) removed; (d)(3) added 43890
86.119–78 Removed 43886
86.119–90 (c)(1), (4) and (7) revised; eff. 7–31–95 34344
86.120–94 Added; eff. 7–31–95 34344
86.121–90 (c) introductory text, (1) and (3)(iii) revised; eff. 7–31–95 34345
86.123–78 (c) added; eff. 7–31–95 34347
86.126–78 Removed 43886
86.127–94 (f) added; eff. 7–31–95 34347
86.127–96 (g) added; eff. 7–31–95 34347
86.129–94 (d)(1), (2)(iii), (3)(ii), (iii), (4)(i), (ii), (iii), (7)(iii) and (iv) revised; (d)(7)(v) added 43891
86.130–96 (e) added; figure revised 43893

40 CFR—Continued

60 FR Page

Chapter I—Continued

86.131–96 (d) revised 43895
86.132–96 (c), (f), (h) introductory text, (1)(i), (2), (j) introductory text, (1) introductory text, (i) and (vi) revised 43895
86.133–96 (c), (h) and (i)(5) revised 43896
86.134–96 (a), (f), (g)(1)(v), (vii), (viii), (xii) introductory text, (A), (xiv), (xv), (xvi), (2)(v), (vii), (x) and (xii) revised; (g)(1)(xx)(C) and (2)(xv) added 43896
86.137–90 (b)(20) revised; eff. 7–31–95 34347
86.137–94 (b)(4), (6)(iii), (iv) and (15) revised; (b)(6)(iv) note removed; eff. 7–31–95 34347
86.138–90 (b) revised 43897
86.138–96 (a)(2), (b)(2)(v)(A) and (viii) revised 43897
86.139–82 Removed 43886
86.140–94 (c) and (d) revised; eff. 7–31–95 34347
86.142–82 Removed 43886
86.142–90 (p)(1) through (7) revised; (p)(8) removed; eff. 7–31–95 34348
86.143–90 (a)(1) and (2)(iii) revised; eff. 7–31–95 34348
86.143–96 (b)(1)(i) and (ii)(C) revised; eff. 7–31–95 34348
(b)(1)(i) introductory text and equation, (D), (2)(i)(B) and (ii)(B) revised; (b)(1)(iii) added; (b)(1)(i)(C) and (E) removed 43897
86.144–78 Removed 43886
86.144–94 (c)(5)(iv) through (xvi), (7)(ii) and (e) revised; (c)(5)(xvii) and (xviii) removed; eff. 7–31–95 34349
86.146–96 (f), (i)(1) and (2) revised 43898
86.152–98 (a) revised 43898
86.153–98 (a) and (c)(2) revised 43898
86.154–98 (e)(3) revised 43898
86.401–78 Removed 43886
86.509–78 Removed 43886
86.509–90 (a)(2)(i) through (iv), (3), (4) introductory text, (b) introductory text, (4), (5), (6), (c) introductory text, (4), (5) and (6) revised; (a)(5) and (d) added; eff. 7–31–95 34351

40 CFR—Continued

60 FR Page

Chapter I—Continued

86.511–78 Removed 43886
86.513–82 Removed 43887
86.513–94 (c)(1) and (2) revised; (c)(3) added; eff. 7–31–95 34354
86.514–78 (a)(2) and (b) revised; (c) added; eff. 7–31–95 34354
86.516–78 Removed 43887
86.516–90 (c)(1) revised; eff. 7–31–95 34354
86.519–90 (d)(1), (4) and (7) revised; eff. 7–31–95 34355
86.521–78 Removed 43887
86.521–90 (d) introductory text, (1) and (3)(iii) revised; eff. 7–31–95 34355
86.523–78 (c) added; eff. 7–31–95 34357
86.526–78 Removed 43887
86.527–78 Removed 43887
86.527–90 (e) added; eff. 7–31–95 34357
86.535–78 Removed 43887
86.537–78 Removed 43887
86.537–90 (b)(4), (6)(iii), (iv), (12) and (14) revised; (b)(6)(iv) note removed; eff. 7–31–95 34357
86.540–78 Removed 43887
86.540–90 (b) and (c) revised; eff. 7–31–95 34357
86.542–78 Removed 43887
86.542–90 (p) revised; eff. 7–31–95 34357
86.544–78 Removed 43887
86.544–90 (c)(5)(iv) through (xvi) and (7)(ii) amended; (c)(5)(xvii), (xviii) and (e) removed; eff. 7–31–95 34358
86.608–90 (a)(2)(ii) revised 43898
86.608–98 (a)(2)(ii) revised 43898
86.1104–87 Removed 33925
86.1104–90 Removed 33925
86.1105–87 (b) and (c)(1) removed 33925
86.1207–90 (b)(1) introductory text and (c)(2) revised; (b)(3) added; eff. 7–31–95 34358
86.1207–96 (b)(1) and (c)(2) revised; (b)(3) added; eff. 7–31–95 34358
(a)(1) introductory text, (ii)(A), (B), (2), (3)(i), (ii), (c)(1), (d), (e) and (f) revised 43898
86.1213–94 (c) revised; eff. 7–31–95 34359
86.1214–85 (a)(1), (2), (b) and (c) revised; (d) added; eff. 7–31–95 34359

40 CFR—Continued

60 FR Page

Chapter I—Continued

86.1216–90 (c)(1) and (3) revised; (d) and (e) added; eff. 7–31–95 34359

86.1217–90 (b) and (c) correctly removed; CFR correction 32612

(c)(5), (7), (9), (d)(1), (2) introductory text, (i), (ii) and (iii) revised; eff. 7–31–95 34359

86.1217–96 (c)(1)(vii), (ix), (xii), (d)(1), (2) introductory text, (i), (ii) and (iii) revised; (c)(4) added; eff. 7–31–95 34360

Introductory text, (a)(1)(ii), (iii), (7), (b), (c) heading, (1) introductory text, (v), (vii), (d)(1) introductory text and equation, (v) and (e)(1)(iii) revised; (c)(1)(iv), (d)(1)(iii) and (iv) removed; (d)(1)(xiii), (xiv) and (3) added 43900

86.1221–90 (c) introductory text, (1) and (3)(iii) revised; eff. 7–31–95 34361

86.1227–90 (c) added; eff. 7–31–95 34363

86.1227–96 (c) added; eff. 7–31–95 34363

86.1229–85 (d)(1), (2)(iii), (3)(ii), (iii), (4)(i), (ii), (iii), (7)(iii) and (iv) revised; (d)(7)(v) added 43901

86.1230–96 (e) added; figure revised 43902

86.1231–96 (d) revised 43904

86.1232–96 (c), (f), (h) introductory text, (1)(i), (2), (j) introductory text, (1) introductory text, (i) and (vi) revised 43904

86.1233–96 (c), (h) and (i)(5) revised 43905

86.1234–96 (a), (f), (g)(1)(v), (vii), (viii), (xii) introductory text, (A), (xiv), (xv), (xvi), (2)(v), (vii), (x) and (xii) revised; (g)(1)(xx)(C) and (2)(xv) added 43905

86.1238–90 (i) revised 43906

86.1238–96 (a)(2), (b)(2)(v)(A) and (viii) revised 43906

86.1242–90 (l)(2) revised; (l)(3) removed; eff. 7–31–95 34363

86.1243–90 (a) introductory text, (1), (2) introductory text, (i), (ii) and (iii) revised; eff. 7–31–95 34363

86.1243–96 (b)(1)(i) and (ii)(C) revised; eff. 7–31–95 34364

40 CFR—Continued

60 FR Page

Chapter I—Continued

(b)(1)(i) introductory text and equation, (D), (2)(i)(B) and (ii)(B) revised; (b)(1)(iii) added; (b)(1)(i)(C) and (E) removed 43906

86.1246–96 (f), (i)(1) and (2) revised 43906

86.1309–84 Removed 43887

86.1309–90 (a)(2), (3) introductory text, (4), (b) introductory text, (4), (5), (6), (c) introductory text, (4), (5), (6), Figure N90–2 and Figure N90–3 revised; (a)(5) and (6) redesignated as (a)(6) and (7); new (a)(5) and (d) added; eff. 7–31–95 34364

86.1310–84 Removed 43887

86.1310–88 Removed 43887

86.1310–90 Heading, (a) introductory text, (1) introductory text, (4), (5), (b)(1) introductory text, (i) introductory text, (ii) and (iii) revised; eff. 7–31–95 34370

86.1311–84 Removed 43887

86.1313–94 (d) revised; eff. 7–31–95 34371

86.1314–94 (b), (e), (g)(2) and (3) revised; (g)(4) added; eff. 7–31–95 34371

86.1316–94 (b)(1) revised; eff. 7–31–95 34371

86.1319–90 (e)(1), (4) and (7) revised; (e)(8) added; eff. 7–31–95 34371

86.1321–94 (a)(3)(ii), (iii), (c) introductory text, (1) and (3)(iii) revised; (a)(3)(iv) and Figure N94–10 added; eff. 7–31–95 34371

86.1323–84 (d) added; eff. 7–31–95 34374

86.1327–90 (a) revised; eff. 7–31–95 34374

86.1327–96 (a) revised; eff. 7–31–95 34374

86.1330–90 (b)(1) and (c) revised; eff. 7–31–95 34374

86.1335–84 Removed 43887

86.1337–90 (a)(3), (13) and (26) revised; eff. 7–31–95 34374

86.1337–96 (a)(3), (13) and (26) revised; eff. 7–31–95 34375

86.1340–90 (g) and (h) revised; eff. 7–31–95 34375

40 CFR—Continued

60 FR Page

Chapter I—Continued

86.1340–94 (d)(8) through (h)(2) removed; new (d)(8) through (h) added; eff. 7–31–95 34375
86.1341–84 Removed 43887
86.1342–84 Removed 43887
86.1342–94 (a)(1), (d)(3)(vi) through (7)(ii) and (8)(ii) revised; eff. 7–31–95 34375
86.1344–84 Removed 43887
86.1344–88 Removed 43887
86.1344–94 (e)(18) introductory text and (ii) through (vi) revised; (e)(18)(vii) removed; eff. 7–31–95 34376
86.1501–84—86.1544–84 (Subpart P) Heading revised; eff. 7–31–95 34376
86.1501–84 Removed 43887
86.1501–94 Revised; eff. 7–31–95 34376
86.1504–84 Removed 43887
86.1504–94 (c) revised; eff. 7–31–95 34376
Added 48536
86.1505–94 (a) revised; eff. 7–31–95 34376
86.1506–84 Removed 43887
86.1509–84 (c) revised; eff. 7–31–95 34376
86.1511–84 (a)(1) and (8)(iii) revised; eff. 7–31–95 34377
86.1513–84 Removed 43887
86.1513–87 Removed 43887
86.1514–84 (c) added; eff. 7–31–95 34377
86.1537–84 (d), (e)(1), (2), (5), (6) and (7) revised; eff. 7–31–95 34377

1996

40 CFR

61 FR Page

86.1 Amended 54877
86.000–2 Added 54878
86.000–3 Added 54878
86.000–7 Added (OMB number pending) 54878
86.000–8 Added (OMB number pending) 54878
86.000–9 Added (OMB number pending) 54879
86.000–16 Added 54881
86.000–21 Added (OMB number pending) 54882
86.000–23 Added (OMB number pending) 54882
86.000–24 Added (OMB number pending) 54882

40 CFR—Continued

61 FR Page

86.000–25 Added (OMB number pending) 54883
86.000–26 Added (OMB number pending) 54883
86.000–28 Added (OMB number pending) 54884
86.001–2 Introductory text revised 54886
86.001–9 Revised (OMB number pending) 54886
86.001–21 Revised (OMB number pending) 54886
86.001–23 Revised (OMB number pending) 54887
86.001–24 Revised (OMB number pending) 54887
86.001–25 Revised (OMB number pending) 54887
86.001–26 Revised (OMB number pending) 54888
86.001–28 Revised (OMB number pending) 54888
86.004–9 Revised (OMB number pending) 54889
86.004–28 Revised (OMB number pending) 54890
86.090–5 (a)(3) added 58106
86.094–13 (a)(1), (c)(1), (d)(1), (e)(1) and (f)(1) amended 58620
86.094–14 (a) redesignated as (a)(1); (a)(2) added 127
86.094–17 (j) revised 45903
86.094–26 (a)(2), (b)(2)(i) and (ii) amended 58620
86.101 (a)(2) removed; (a)(4) added 54890
86.106–00 Added 54890
86.108–00 Added (OMB number pending) 54890
86.115–00 Added 54891
86.118–00 Added 54891
86.127–00 Added 54891
86.128–00 Added 54892
86.129–00 Added (OMB number pending) 54892
86.130–00 Added 54893
86.131–00 Added 54893
86.132–00 Added 54893
86.135–00 Added 54894
86.158–00 Added 54894
86.159–00 Added (OMB number pending) 54894
86.160–00 Added (OMB number pending) 54895
86.161–00 Added (OMB number pending) 54897

40 CFR—Continued

61 FR Page

86.162–00 Added (OMB number pending) 54898
86.162–03 Added (OMB number pending) 54899
86.163–00 Added 54899
86.164–00 Added 54900
86.610–84 Removed 51366
86.1003–88 Removed 51366
86.1005–88 Removed 51366
86.1008–88 Removed 51366
86.1010–84 Removed 51366
86.1105–87 (e) revised; (g) added 6949
(g)(2), (3) and (h) added 6953
86.1113–87 (g)(1)(ii) revised; (g)(1)(iii), (iv) and (v) removed 51366
86.1311–94 (b)(2)(iii) redesignated as (b)(3) 127
86 Appendix I amended 54901

1997

40 CFR

62 FR Page

86 Authority citation revised 31232, 44875, 47119
86.1 (b)(1) table and (4) table amended; eff. 8–5–97 31232
(b)(1) table and (2) table amended 47119
(b)(1) table amended 54715
86.001–23 (a) through (b)(1), (3) through (e)(1) and (f) through (m) revised 54720
86.001–30 (a)(4)(iv)(A) through (9) revised 54720
86.004–2 Added 54720
86.004–11 Added 54721
86.004–15 Added 54722
86.004–21 Added 54724
86.004–25 Added 54725
86.004–28 (c) and (d) revised 54726
86.004–30 (a)(3), (4)(i), (ii) and (iv)(A) through (12) revised 54727
86.004–38 Added 54728
86.004–40 Added 54729
86.082–2 (a) revised; eff. 8–5–97 31233
86.085–37 (b)(1) introductory text revised (OMB number pending) 31233
86.090–2 Amended; eff. 8–5–97 31233
86.094–8 (c) revised 47120
86.094–9 (a)(1)(i) introductory text, (ii) introductory text, (iii) and (c) revised 47120

40 CFR—Continued

62 FR Page

86.094–11 (b)(1) introductory text revised 47120
86.094–13 (a)(1), (c)(1), (d)(1), (e)(1) and (f)(1) amended 11082, 44875
86.094–26 (a)(2), (b)(2)(i) and (ii) amended 11082, 44875
86.094–38 Introductory text added; (a) through (f) revised; eff. 8–5–97 31233
86.096–8 (c) revised 47120
86.096–11 (a) introductory text and (c) revised 47120
86.096–30 (a)(19) through (22) added; eff. 8–5–97 31233
86.097–1 Added; eff. 8–5–97 31234
86.098–3 Revised 54716
86.098–10 (a)(1)(i)(C)(*2*), (*3*), (ii)(C)(*2*), (*3*), (iii)(C)(*2*), (iv)(C)(*2*), (v)(C)(*2*) and (vi)(C)(*2*) amended 54716
86.098–11 (a)(3)(ii) and (4)(iii) introductory text amended 54716
86.098–15 Added 54716
86.098–23 (a), (b)(1), (3), (4)(i), (ii), (c), (d), (e)(1), (2), (f) through (l), (m)(2)(i) and (iv) revised; (m)(1) amended 54717
86.098–30 (a)(4)(iv)(A) through (12) revised 54719
86.099–11 (a)(3)(ii) amended; (a)(4)(iii) introductory text revised 54720
86.101 (c) added; eff. 8–5–97 31234
86.113–94 (b)(2) table and (3) table revised 47120
86.119–90 (b)(3) revised; (b)(8) added 47121
86.144–94 (c)(8)(ii)(B) revised 47122
86.601–84 (a) added; eff. 8–5–97 31234
86.602–97 Added; eff. 8–5–97 31234
86.602–98 (b)(9), (10) and (11) added; eff. 8–5–97 31234
86.603–97 Added; eff. 8–5–97 31234
86.603–98 (f) added; eff. 8–5–97 31234
86.608–97 Added; eff. 8–5–97 31234
86.608–98 (a) introductory text, (2) introductory text, (i), (iii) and (viii) revised; eff. 8–5–97 31235
86.609–97 Added; eff. 8–5–97 31235
86.609–98 (c)(1) revised; eff. 8–5–97 31236
86.612–97 Added; eff. 8–5–97 31236
86.884–7 (a)(2)(i), (3) and (4) revised 47122
86.884–8 (c) revised 47122
86.884–9 (b)(2)(i) through (iv) and (c)(1) revised 47122

40 CFR—Continued

62 FR Page

86.884–10 (a)(8) revised 47123
86.884–13 (b)(6)(ii) and (iii) revised 47123
86.884–14 Revised 47123
86.1001–84 (a) added; eff. 8–5–97 31238
86.1002–97 Added; eff. 8–5–97 31238
86.1002–2001 (b)(8) through (11) added; eff. 8–5–97 31238
86.1003–97 Added; eff. 8–5–97 31238
86.1003–2001 (g) added; eff. 8–5–97 31238
86.1008–90 (a)(1)(iii) added 47123
86.1008–96 (a)(1) revised 47123
86.1008–97 Added; eff. 8–5–97 31238
86.1008–2001 (a)(2), (3) introductory text, (i), (iii) and (viii) revised; eff. 8–5–97 31239
(a)(1)(iii) added 47123
86.1009–97 Added; eff. 8–5–97 31239
86.1009–2001 (c)(1) revised; eff. 8–5–97 31239
86.1012–97 Added; eff. 8–5–97 31240
86.1014–97 Added; eff. 8–5–97 31241
86.1111–87 (a)(4) redesignated as (a)(5); new (a)(4) added 47123
86.1310–90 (b)(1)(iv)(C), (3)(v), (vi), (b)(6) introductory text and (7)(iv) revised 47124
86.1311–94 (b)(3) revised 54730
86.1312–88 (a) revised 47124
86.1313–91 (b)(2) revised 47125
86.1313–94 (b)(2) revised 47125
86.1313–98 Added 47126
86.1316–90 (b)(1) revised; (f) added 47126
86.1316–94 (b)(1) revised; (f) added 47126
86.1319–84 (d)(3) revised; (d)(8) added 47127
86.1319–90 (d)(3) revised; (d)(8) added 47127
86.1321–90 (a) and (b)(3) revised 47128
86.1321–94 (a) and (b)(3) revised 47128
86.1322–84 (b)(3) revised 47128
86.1323–84 (b)(3) revised 47129
86.1324–84 (c) revised 47129
86.1325–94 (c) revised 47129
86.1327–90 (b), (f)(1), (2) introductory text and (i) revised 47129
86.1327–94 (b), (f)(1), (2) introductory text and (i) revised 47129
86.1327–96 (b), (f)(1), (2) introductory text and (i) revised 47130
86.1327–98 Added 47130

40 CFR—Continued

62 FR Page

86.1330–84 (b)(1), (2) and (f)(1)(i) revised; (b)(5) added 47131
86.1330–90 (b)(1), (2) and (f)(1)(i) revised; (b)(5) added 47131
86.1333–90 (c), (d) introductory text, (d)(1), (2) and (e)(2) revised; (d)(3) and (4) removed 47131
86.1334–84 (a)(2) revised 47131
86.1335–90 Revised 47131
86.1337–90 (a)(9), (10)(i), (ii), (11), (13), (23) and (26) revised; (a)(10)(iii) removed 47132
86.1337–96 (a)(9), (10)(i), (ii), (11), (13), (23) and (26) revised; (a)(10)(iii) removed 47133
86.1338–84 Revised 47133
86.1339–90 Revised 47134
86.1341–90 (b), (c) and (d) revised; (e) through (h) removed 47134
86.1341–98 Added 47135
86.1342–90 (h)(2)(i) through (vii) removed; (i) added 47135
86.1342–94 (e) through (h) revised; (i) added 47135
86.1343–88 (b) introductory text revised; (b)(2)(i) through (v) ans (b)(2)(ii) through (vi); new (b)(2)(i) added 47135
86.1344–94 (e)(22) revised 54730
86.1701–97—86.1780–97 (Subpart R) Added; eff. 8–5–97 31242
86.1710–97 OMB number pending 31250
(c)(7) corrected 45289
86.1712–97 OMB number pending 31254
86.1776–97 OMB number pending 31262
86 Appendixes XIII, XIV and XV added; eff. 8–5–97 31264
Appendix XVI added; eff. 8–5–97 31265
Appendix XVII added; eff. 8–5–97 31266
Appendix XVIII added; eff. 8–5–97 31270
Appendix XVIII corrected 45289

1998

(Regulations published from January 1, 1998 through July 1, 1998)

40 CFR

63 FR Page

Chapter I

86 Authority citation revised 7719

40 CFR—Continued

63 FR Page

Chapter I—Continued

National Low Emmission Vehicle Program finding 11374

86.1 (b)(1) table and (4) table amended 965

86.094–17 (i) revised 7719

86.096–30 (a)(23) and (24) added 965

86.097–1 Redesignated as 86.099–1 965

86.099–1 Redesignated from 86.097–1 and revised 965

86.101 (c) revised 965

86.113–94 (b)(2) table revised 24448

86.119–90 (b)(3) revised; (b)(8) removed 24448

86.402–98 Added 11849

86.406–78 (d) revised 11849

86.518–78 (c) revised 11849

86.529–98 Added 11849

86.1319–84 (d)(3) revised; (d)(8) removed 24449

86.1319–90 (d)(3) revised; (d)(8) removed 24449

86.1333–90 (d) heading, introductory text, (1) and (2) revised 24449

86.1701–97 Redesignated as 86.1701–99 966

86.1701–99 Redesignated from 86.1701–97; (a) and (c) revised; (d) added 966

86.1702–97 Redesignated as 86.1702–99 966

86.1702–99 Redesignated from 86.1702–97; (b) amended 966

86.1703–97 Redesignated as 86.1703–993 967

86.1703–99 Redesignated from 86.1703–97; (b) amended 967

86.1704–97 Redesignated as 86.1704–99 967

86.1704–99 Redesignated from 86.1704–97 967

86.1705–97 Redesignated as 86.1705–99 967

86.1705–99 Redesignated from 86.1705–97; heading, (a) introductory text, (2), (3) and (b) through (g) revised 967

86.1706–97 Redesignated as 86.1706–99 969

86.1706–99 Redesignated from 86.1706–97 and revised 969

86.1707–99 Added 970

86.1708–97 Redesignated as 86.1708–99 976

40 CFR—Continued

63 FR Page

Chapter I—Continued

86.1708–99 Redesignated from 86.1708–97; heading, (b)(1)(i), (iii)(B) and (c) amended; tables amended; (e) added 976

86.1709–97 Redesignated as 86.1709–99 979

86.1709–99 Redesignated from 86.1709–97; heading, (b)(1)(i), (iii)(B) and (c) revised; tables amended; (e) added 979

86.1710–97 Redesignated as 86.1710–99 983

86.1710–99 Redesignated from 86.1710–97; amended; (a) introductory text and (c)(9) added; (a)(1), (3)(i), (iii)(A), (B), (4)(i), (iii)(A), (B), (5)(ii), (b)(4), (c)(1), (2), (6), (7), (8), (d), (e)(2) and (4)(ii) revised 983

86.1711–97 Redesignated as 86.1711–99 985

86.1711–99 Redesignated from 86.1711–97; (b) removed 985

86.1712–97 Redesignated as 86.1712–99 985

86.1712–99 Redesignated from 86.1712–97; (a)(2)(iii), (b)(1) and (3)(vi) revised 985

86.1713–97 Redesignated as 86.1713–99 986

86.1713–99 Redesignated from 86.1713–97 986

86.1714–97 Redesignated as 86.1714–99 986

86.1714–99 Redesignated from 86.1714–97 986

86.1716–97 Redesignated as 86.1716–99 986

86.1716–99 Redesignated from 86.1716–97; (b) removed 986

86.1717–97 Redesignated as 86.1717–99 986

86.1717–99 Redesignated from 86.1717–97; heading revised 986

86.1721–97 Redesignated as 86.1721–99 986

86.1721–99 Redesignated from 86.1721–97 986

86.1723–97 Redesignated as 86.1723–99 986

86.1723–99 Redesignated from 86.1723–97; revised 986

86.1724–97 Redesignated as 86.1724–99 986

40 CFR—Continued

63 FR Page

Chapter I—Continued

86.1724–99 Redesignated from 86.1724–97; (b) introductory text revised; (b)(2) added 986
86.1725–97 Redesignated as 86.1725–99 986
86.1725–99 Redesignated from 86.1725–97; (d) added 986
86.1726–97 Redesignated as 86.1726–99 986
86.1726–99 Redesignated from 86.1726–97; (c)(1) revised 987
86.1728–97 Redesignated as 86.1728–99 987
86.1728–99 Redesignated from 86.1728–97 987
86.1734–97 Redesignated as 86.1734–99 987
86.1734–99 Redesignated from 86.1734–97 987
86.1735–97 Redesignated as 86.1735–99 987
86.1735–99 Redesignated from 86.1735–97 987
86.1770–97 Redesignated as 86.1770–99 987
86.1770–99 Redesignated from 86.1770–97; (a)(2) revised 987
86.1771–97 Redesignated as 86.1771–99 987
86.1771–99 Redesignated from 86.1771–97 987
86.1772–97 Redesignated as 86.1772–99 987
86.1772–99 Redesignated from 86.1772–97; heading revised 987

40 CFR—Continued

63 FR Page

Chapter I—Continued

86.1773–97 Redesignated as 86.1773–99 987
86.1773–99 Redesignated from 86.1773–97; (d) added 987
86.1774–97 Redesignated as 86.1774–99 987
86.1774–99 Redesignated from 86.1774–97 987
86.1775–97 Redesignated as 86.1775–99 987
86.1775–99 Redesignated from 86.1775–97 987
86.1776–97 Redesignated as 86.1776–99 987
86.1776–99 Redesignated from 86.1776–97 987
86.1777–97 Redesignated as 86.1777–99 987
86.1777–99 Redesignated from 86.1777–97 987
86.1778–97 Redesignated as 86.1778–99 987
86.1778–99 Redesignated from 86.1778–97 987
86.1779–97 Redesignated as 86.1779–99 987
86.1779–99 Redesignated from 86.1779–97 987
86.1780–97 Redesignated as 86.1780–99 987
86.1780–99 Redesignated from 86.1780–97 987
86 Appendix XVIII amended 987
Technical correction 20447
Appendix I corrected 23501