AUTHENTICATED
U.S. GOVERNMENT
INFORMATION
GPO

code of federal regulations

Agriculture

7

PARTS 1600 TO 1899

Revised as of January 1, 1998

CONTAINING
A CODIFICATION OF DOCUMENTS
OF GENERAL APPLICABILITY
AND FUTURE EFFECT

AS OF JANUARY 1, 1998

With Ancillaries

Published by
the Office of the Federal Register
National Archives and Records
Administration

as a Special Edition of
the Federal Register

As of January 1, 1998

Title 7, Parts 1200 to 1499 and Title 7, Parts 1500 to 1899

Revised as of January 1, 1997

Are reorganized into

Title 7, Parts 1200 to 1599 and Title 7, Parts 1600 to 1899

U.S. GOVERNMENT PRINTING OFFICE

WASHINGTON : 1998

For sale by U.S. Government Printing Office
Superintendent of Documents, Mail Stop: SSOP, Washington, DC 20402–9328

Table of Contents

	Page
Explanation	v
Title 7:	
Subtitle B—Regulations of the Department of Agriculture—Continued:	
Chapter XVI—Rural Telephone Bank, Department of Agriculture	5
Chapter XVII—Rural Utilities Service, Department of Agriculture	15
Chapter XVIII—Rural Housing Service, Rural Business-Cooperative Service, Rural Utilities Service, and Farm Service Agency, Department of Agriculture	1287
Finding Aids:	
Material Approved for Incorporation by Reference	1335
Table of CFR Titles and Chapters	1345
Alphabetical List of Agencies Appearing in the CFR	1361
Redesignation Tables	1371
List of CFR Sections Affected	1375

Cite this Code: CFR

To cite the regulations in this volume use title, part and section number. Thus, 7 CFR 1600.1 *refers to title 7, part 1600, section 1.*

Explanation

The Code of Federal Regulations is a codification of the general and permanent rules published in the Federal Register by the Executive departments and agencies of the Federal Government. The Code is divided into 50 titles which represent broad areas subject to Federal regulation. Each title is divided into chapters which usually bear the name of the issuing agency. Each chapter is further subdivided into parts covering specific regulatory areas.

Each volume of the Code is revised at least once each calendar year and issued on a quarterly basis approximately as follows:

Title 1 through Title 16.....as of January 1
Title 17 through Title 27.....as of April 1
Title 28 through Title 41.....as of July 1
Title 42 through Title 50.....as of October 1

The appropriate revision date is printed on the cover of each volume.

LEGAL STATUS

The contents of the Federal Register are required to be judicially noticed (44 U.S.C. 1507). The Code of Federal Regulations is prima facie evidence of the text of the original documents (44 U.S.C. 1510).

HOW TO USE THE CODE OF FEDERAL REGULATIONS

The Code of Federal Regulations is kept up to date by the individual issues of the Federal Register. These two publications must be used together to determine the latest version of any given rule.

To determine whether a Code volume has been amended since its revision date (in this case, January 1, 1998), consult the ''List of CFR Sections Affected (LSA),'' which is issued monthly, and the ''Cumulative List of Parts Affected,'' which appears in the Reader Aids section of the daily Federal Register. These two lists will identify the Federal Register page number of the latest amendment of any given rule.

EFFECTIVE AND EXPIRATION DATES

Each volume of the Code contains amendments published in the Federal Register since the last revision of that volume of the Code. Source citations for the regulations are referred to by volume number and page number of the Federal Register and date of publication. Publication dates and effective dates are usually not the same and care must be exercised by the user in determining the actual effective date. In instances where the effective date is beyond the cutoff date for the Code a note has been inserted to reflect the future effective date. In those instances where a regulation published in the Federal Register states a date certain for expiration, an appropriate note will be inserted following the text.

OMB CONTROL NUMBERS

The Paperwork Reduction Act of 1980 (Pub. L. 96–511) requires Federal agencies to display an OMB control number with their information collection request.

Many agencies have begun publishing numerous OMB control numbers as amendments to existing regulations in the CFR. These OMB numbers are placed as close as possible to the applicable recordkeeping or reporting requirements.

OBSOLETE PROVISIONS

Provisions that become obsolete before the revision date stated on the cover of each volume are not carried. Code users may find the text of provisions in effect on a given date in the past by using the appropriate numerical list of sections affected. For the period before January 1, 1986, consult either the List of CFR Sections Affected, 1949–1963, 1964–1972, or 1973–1985, published in seven separate volumes. For the period beginning January 1, 1986, a ''List of CFR Sections Affected'' is published at the end of each CFR volume.

INCORPORATION BY REFERENCE

What is incorporation by reference? Incorporation by reference was established by statute and allows Federal agencies to meet the requirement to publish regulations in the Federal Register by referring to materials already published elsewhere. For an incorporation to be valid, the Director of the Federal Register must approve it. The legal effect of incorporation by reference is that the material is treated as if it were published in full in the Federal Register (5 U.S.C. 552(a)). This material, like any other properly issued regulation, has the force of law.

What is a proper incorporation by reference? The Director of the Federal Register will approve an incorporation by reference only when the requirements of 1 CFR part 51 are met. Some of the elements on which approval is based are:

(a) The incorporation will substantially reduce the volume of material published in the Federal Register.

(b) The matter incorporated is in fact available to the extent necessary to afford fairness and uniformity in the administrative process.

(c) The incorporating document is drafted and submitted for publication in accordance with 1 CFR part 51.

Properly approved incorporations by reference in this volume are listed in the Finding Aids at the end of this volume.

What if the material incorporated by reference cannot be found? If you have any problem locating or obtaining a copy of material listed in the Finding Aids of this volume as an approved incorporation by reference, please contact the agency that issued the regulation containing that incorporation. If, after contacting the agency, you find the material is not available, please notify the Director of the Federal Register, National Archives and Records Administration, Washington DC 20408, or call (202) 523–4534.

CFR INDEXES AND TABULAR GUIDES

A subject index to the Code of Federal Regulations is contained in a separate volume, revised annually as of January 1, entitled CFR INDEX AND FINDING AIDS. This volume contains the Parallel Table of Statutory Authorities and Agency Rules (Table I), and Acts Requiring Publication in the Federal Register (Table II). A list of CFR titles, chapters, and parts and an alphabetical list of agencies publishing in the CFR are also included in this volume.

An index to the text of ''Title 3—The President'' is carried within that volume.

The Federal Register Index is issued monthly in cumulative form. This index is based on a consolidation of the ''Contents'' entries in the daily Federal Register.

A List of CFR Sections Affected (LSA) is published monthly, keyed to the revision dates of the 50 CFR titles.

REPUBLICATION OF MATERIAL

There are no restrictions on the republication of material appearing in the Code of Federal Regulations.

INQUIRIES

For a legal interpretation or explanation of any regulation in this volume, contact the issuing agency. The issuing agency's name appears at the top of odd–numbered pages.

For inquiries concerning CFR reference assistance, call 202–523–5227 or write to the Director, Office of the Federal Register, National Archives and Records Administration, Washington, DC 20408 or e–mail info@fedreg,nara.gov.

SALES

The Government Printing Office (GPO) processes all sales and distribution of the CFR. For payment by credit card, call 202–512–1800, M–F, 8 a.m. to 4 p.m. e.s.t. or fax your order to 202–512–2233, 24 hours a day. For payment by check, write to the Superintendent of Documents, Attn: New Orders, P.O. Box 371954, Pittsburgh, PA 15250–7954. For GPO Customer Service call 202–512–1803.

ELECTRONIC SERVICES

The texts of the Code of Federal Regulations, The United States Government Manual, the Federal Register, Public Laws, Weekly Compilation of Presidential Documents and the 1995 Privacy Act Compilation are available in electronic format at www.access.gpo.gov/nara/index.html. For more information, contact Electronic Information Dissemination Services, U.S. Government Printing Office. Phone 202–512–1530, or 888–293–6498 (toll–free). E–mail, gpoaccess@gpo.gov.

The Office of the Federal Register maintains a free electronic bulletin board service, FREND (Federal Register Electronic News Delivery), for public law numbers, Federal Register finding aids, and related information. To access by modem: phone, 202–275–0920.

In addition, the Federal Register's public inspection list and table of contents are also available on the National Archives and Records Administration's Fax–on–Demand system. Phone, 301–713–6905.

RAYMOND A. MOSLEY,
Director,
Office of the Federal Register.

January 1, 1998.

THIS TITLE

Title 7—AGRICULTURE is composed of fifteen volumes. The parts in these volumes are arranged in the following order: parts 1–26, 27–52, 53–209, 210–299, 300–399, 400–699, 700–899, 900–999, 1000–1199, 1200–1599, 1600–1899, 1900–1939, 1940–1949, 1950–1999, and part 2000 to end. The contents of these volumes represent all current regulations codified under this title of the CFR as of January 1, 1998.

The Food and Consumer Service current regulations in the volume containing parts 210–299, include the Child Nutrition Programs and the Food Stamp Program. The regulations of the Federal Crop Insurance Corporation are found in the volume containing parts 400–699.

All marketing agreements and orders for fruits, vegetables and nuts appear in the one volume containing parts 900–999. All marketing agreements and orders for milk appear in the volume containing parts 1000–1199. Part 900—General Regulations is carried as a note in the volume containing parts 1000–1199, as a convenience to the user.

Redesignation tables appear in the Finding Aids section of the volumes containing parts 210–299 and parts 1600–1899.

For this volume, Cheryl E. Sirofchuck was Chief Editor. The Code of Federal Regulations publication program is under the direction of Frances D. McDonald, assisted by Alomha S. Morris.

Would you like to know. . .

if any changes have been made to the *Code of Federal Regulations* or what documents have been published in the *Federal Register* without reading the *Federal Register* every day? If so, you may wish to subscribe to the *LSA* (List of CFR Sections Affected), the *Federal Register Index,* or both.

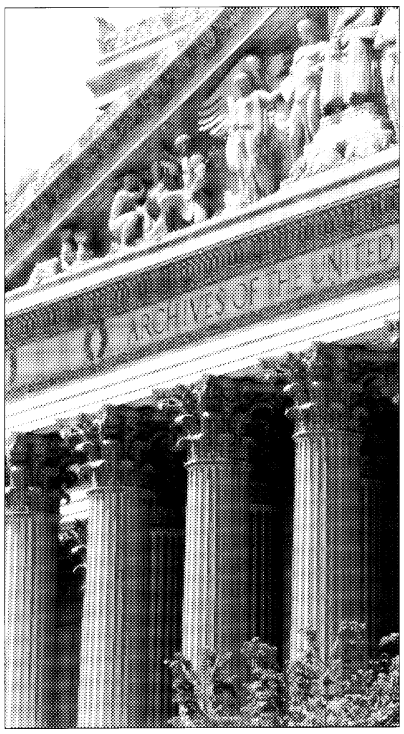

LSA

The *LSA* (List of CFR Sections Affected) is designed to lead users of the *Code of Federal Regulations* to amendatory actions published in the *Federal Register*. The *LSA* is issued monthly in cumulative form. Entries indicate the nature of the changes—such as revised, removed, or corrected.
$27 per year.

Federal Register Index

The index, covering the contents of the daily *Federal Register,* is issued monthly in cumulative form. Entries are carried primarily under the names of the issuing agencies. Significant subjects are carried as cross-references.
$25 per year.

A finding aid is included in each publication which lists *Federal Register* page numbers with the date of publication in the *Federal Register.*

Superintendent of Documents Subscription Order Form

Order Processing Code:
***5421**

❑ **YES,** send me the following indicated subscriptions for one year:

____ **LSA (List of CFR Sections Affected),** (LCS) for $27 per year.

____ **Federal Register Index** (FRSU) $25 per year.

The total cost of my order is $ _____
Price is subject to change. International customers please add 25%.

(Includes regular shipping and handling.)

For privacy check box below:

❑ Do not make my name available to other mailers

Check method of payment:

❑ Check payable to Superintendent of Documents

❑ GPO Deposit Account ☐☐☐☐☐☐☐ — ☐

❑ VISA ❑ MasterCard ☐☐☐☐ (expiration date)

Company or personal name

Street address

City, State, ZIP code

Daytime phone with area code

Purchase order No. (optional)

Credit card No. (must be 20 digits)

Thank you for your order!

Authorizing signature 1/97

Fax your orders (202) 512–2250
Phone your orders (202) 512–1800

Mail To: Superintendent of Documents
PO Box 371954
Pittsburgh PA 15250–7954

Title 7—Agriculture

(This book contains parts 1600 to 1899)

Part

SUBTITLE B—REGULATIONS OF THE DEPARTMENT OF AGRICULTURE—CONTINUED:

CHAPTER XVI—Rural Telephone Bank, Department of Agriculture 1600

CHAPTER XVII—Rural Utilities Service, Department of Agriculture 1700

CHAPTER XVIII—Rural Housing Service, Rural Business-Cooperative Service, Rural Utilities Service, and Farm Service Agency, Department of Agriculture 1806

Subtitle B—Regulations of the Department of Agriculture—Continued

CHAPTER XVI—RURAL TELEPHONE BANK, DEPARTMENT OF AGRICULTURE

Part		*Page*
1600	General information	6
1610	Loan policies	9

PART 1600—GENERAL INFORMATION

MEETINGS OF THE BOARD OF DIRECTORS OF THE RURAL TELEPHONE BANK

Sec.
1600.1 General.
1600.2 Definitions.
1600.3 Open meetings.
1600.4 Scheduling of meetings.
1600.5 Public announcement of meetings.
1600.6 Bases for closing a meeting to the public.
1600.7 Procedures for closing a meeting to the public.
1600.8 Transcript, recording or minutes; availability to the public.

AUTHORITY: 7 U.S.C. 941 *et seq.*; Pub. L. 103–354, 108 Stat. 3178 (7 U.S.C. 6941 *et seq.*).

SOURCE: 56 FR 49134, Sept. 27, 1991, unless otherwise noted.

MEETINGS OF THE BOARD OF DIRECTORS OF THE RURAL TELEPHONE BANK

§ 1600.1 General.

The purpose of this part is to effectuate the provisions of the Government in the Sunshine Act. This part applies to the deliberations of a quorum of the Directors of the Bank required to take action on behalf of the Bank where such deliberations determine or result in the joint conduct or disposition of official Bank business. Any deliberation to which this part applies is hereinafter in this part referred to as a meeting of the Board of Directors.

§ 1600.2 Definitions.

As used in this part:

Board means Board of Directors of the Rural Telephone Bank (Bank).

Director means an individual who is a member of the Board.

Legal Counsel means the legal counsel of the Bank.

Meeting means the deliberations (including those conducted by conference telephone call or by any other method) among a quorum of the Directors, where such deliberations determine or result in joint conduct of official business of the Board. For purposes of this part, each item on the agenda of a meeting is considered a meeting or a portion of a meeting. To the extent that the discussions do not result in the beginning of deliberations or achieve a consensus on a matter of official agency business or effectively predetermine official actions, the term *Meeting* does not include:

(1) Deliberations to determine whether a meeting or portions of a meeting will be open or closed or whether information pertaining to closed meetings will be disclosed;

(2) Calling a meeting at a date earlier than announced as provided in § 1600.5;

(3) Changing the subject matter of a publicly announced meeting as provided in § 1600.5;

(4) Disposition of Board business by circulation of materials to individual Board members;

(5) Staff briefings of Board members;

(6) Informal background discussions among Board members and staff which clarify issues and expose varying views; or

(7) Sessions with individuals from outside the Bank where Board members listen to a presentation and may elicit additional information.

Open to public observation means the right of any member of the public to attend and observe, but not participate or interfere in any way in an open meeting of the Board.

§ 1600.3 Open meetings.

(a) Except as provided for in § 1600.6 every portion of every meeting of the Board shall be open to public observation. Observation does not include participation or disruptive conduct by observers, and persons engaging in such conduct will be removed from the meeting. Documents being considered at meetings of the Board may be obtained subject to the exemptions set forth in § 1600.8.

(b) Board members shall not jointly conduct or dispose of official Board business other than in accordance with this part.

(c) The Secretary of the Board shall be responsible for assuring that ample space, sufficient visibility, and adequate acoustics are provided for public observation of meetings of the Board.

§ 1600.4 Scheduling of meetings.

A decision to hold a meeting of the Board should be made as provided in the bylaws of the Bank and at least ten days prior to the scheduled meeting date in order for the Secretary of the

Bank to give the public notice required by §1600.5. Special meetings of the Board may be held on less than ten days notice if a majority of the Board determines by a recorded vote that Bank business requires that the special meeting be held on less than ten days notice. After public announcement of a meeting of the Board under the provisions of §1600.5, the subject matter thereof, or the determination to open or close a meeting, or portion thereof, may only be changed if a majority of the Directors determines by a recorded vote that business so requires and that no earlier announcement of the change is possible.

§1600.5 Public announcement of meetings.

(a) Except as otherwise provided in this section, public announcement of open meetings and meetings or portions thereof closed under §1600.7 will be made at least seven days in advance of each meeting. Except to the extent that such information is determined to be exempt from disclosure under §1600.6, each such public announcement will state the time, place, and subject matter of the meeting, whether it is to be open or closed to the public, and the name and telephone number of the official designated to respond to requests for information about the meeting. Each such announcement shall be submitted for publication in the FEDERAL REGISTER. Copies of the announcement shall also be mailed to holders of Class B and Class C Bank stock.

(b) If a meeting is closed, the Board may omit from the announcement information usually included, if and to the extent that it finds that disclosure would be likely to have any of the consequences listed in §1600.6.

(c) Where a majority of the Board members determine by recorded vote that Bank business requires that a meeting be called on less than ten days notice, public announcement shall be made at the earliest practicable time. Such announcement will state the time, place, and the subject matter of the meeting, whether it is to be open or closed to the public, and the name and telephone number of the official designated to respond to requests for information about the meeting.

(d) The time or place of a meeting may be changed following the public announcement required by paragraph (a) of this section only if the Secretary publicly announces such change at the earliest practicable time. The subject matter of a meeting, or the determination of the Board to open or close a meeting, or portion of a meeting, to the public, may be changed following the public announcement required by this section only if:

(1) A majority of the Directors determines by a recorded vote that business so requires and that no earlier announcement of the change was possible; and

(2) The Secretary publicly announces such change and the vote of each Director upon such change at the earliest practicable time.

(e) The earliest practicable time, as used in this subsection, means as soon as possible, which should in few, if any, instances be later than the commencement of the meeting or portion in question.

(f) Each person interested in attending an open meeting of the Board should notify the Assistant Secretary of the Board at least one business day prior to the open meeting of their intention to attend the meeting. Any person who fails to do so may not be accommodated if there is insufficient space in the meeting room.

§1600.6 Bases for closing a meeting to the public.

(a) A portion or portions of a Board meeting may be closed to the public and any information pertaining to such meeting otherwise required by §1600.3 to be disclosed to the public may be withheld, where the Board determines that public disclosure of information to be discussed at such meetings is likely to:

(1) Disclose matters that are:

(i) Specifically authorized under criteria established by an Executive Order to be kept secret in the interests of national defense or foreign policy; and

(ii) In fact properly classified pursuant to such Executive Order.

(2) Relate solely to the internal personnel rules and practices of the Bank;

(3) Disclose matters specifically exempted from disclosure by statute

(other than the Freedom of Information Act, 5 U.S.C. 552), provided that such statute:

(i) Requires that the matters be withheld from the public in such a manner as to leave no discretion on the issue; or

(ii) Establishes particular criteria for withholding or refers to particular types of matters to be withheld.

(4) Disclose trade secrets and commercial or financial information obtained from a person and privileged or confidential;

(5) Involve accusing any person of a crime, or formally censuring any person;

(6) Disclose information of a personal nature where disclosure would constitute a clearly unwarranted invasion of personal privacy;

(7) Disclose investigatory records compiled for law enforcement purposes, or information which if written would be contained in such records, but only to the extent that the production of such records or information would:

(i) Interfere with enforcement proceedings;

(ii) Deprive a person of a right to a fair trial or to an impartial adjudication;

(iii) Constitute an unwarranted invasion of personal privacy;

(iv) Disclose the identity of a confidential source, and, in the case of a record compiled by a criminal enforcement authority in the course of a criminal investigation, or by an agency conducting a lawful national security intelligence investigation, confidential information furnished only by the confidential source;

(v) Disclose investigative techniques and procedures; or

(vi) Endanger the life or physical safety of law enforcement personnel.

(8) Disclose information contained in or related to examination, operating, or condition reports prepared by, on behalf of, or for the use of the Bank or any other agency responsible for the regulation or supervision of financial institutions;

(9) Disclose information the premature disclosure of which would be likely to significantly frustrate implementation of a proposed action of the Board or of another agency, except that this shall not apply in any instance where the content or nature of the proposed action has already been disclosed to the public or where the Board is required by law to make such disclosure on its own initiative prior to taking final action on such proposal; or

(10) Specifically concern the Board's participation in a civil action or proceeding, an action in a foreign court or international tribunal, or an arbitration, or the initiation, conduct, or disposition by the Board of a particular case of formal agency adjudication pursuant to the procedures in 5 U.S.C. 554 or otherwise involving a determination on the record after opportunity for a hearing.

(b) Any Board meeting or portion thereof, which may be closed, or any information which may be withheld under paragraph (a) of this section, will not be closed or withheld, respectively, in any case where the Board finds the public interest requires otherwise.

§ 1600.7 Procedures for closing a meeting to the public.

(a) A majority of all Directors may vote to close a meeting or withhold information pertaining to that meeting. A separate vote shall be taken with respect to any action under § 1600.6(a). A majority of the Board may act by taking a single vote with respect to a series of meetings, a portion or portions of which are proposed to be closed to the public, or with respect to any information concerning such series of meetings, so long as each meeting in such series involves the same particular subject matter and is scheduled to be held no more than thirty days after the initial meeting in such series. The vote of each Director participating in such vote shall be recorded and no proxy shall be allowed.

(b) Whenever any person whose interests may be directly affected by a portion of the Board's meeting requests that the Board close such portion to the public on the basis of exemptions in paragraph (a)(5), (a)(6), or (a)(7) of § 1600.6, the Board, upon request of any one of its members, will vote whether or not to close such portion of the meeting. The vote of each Director participating in such vote shall be recorded and no proxy shall be allowed.

(c) Before every Board meeting closed on the basis of one or more of the exemptions in §1600.6(a), the Legal Counsel will publicly certify that, in Counsel's opinion, the meeting may be closed to the public and shall state each relevant exemption.

(d) Within one business day after any vote taken pursuant to paragraph (a), (b), or (c) of this section, the Board will make publicly available a written copy of the vote, reflecting the vote of each Board member. Except to the extent that such information is exempt from disclosure, if a meeting or portion of a meeting is to be closed to the public, the Board will make publicly available within one business day after the required vote a full written explanation of its action, together with a list of all persons expected to attend the meeting and their affiliation.

§1600.8 Transcript, recording or minutes; availability to the public.

(a) The Secretary of the Board will maintain the following records for each Board meeting, or portion thereof which is closed to the public pursuant to a vote under §1600.7:

(1) A copy of the Legal Counsel's certification required by §1600.7;

(2) A copy of a statement from the presiding officer which sets forth the time and place of the closed meeting or portion thereof and a list of persons present; and

(3) A complete verbatim transcript or electronic recording adequate to record fully the proceedings of each Board meeting or portion of a meeting, except that in the case of a meeting or portion of a meeting closed to the public on the basis of exemptions in paragraph (a)(8) or (a)(10) of §1600.6, the Secretary of the Board will maintain either a transcript, electronic recording, or a complete set of minutes. Such minutes shall fully and clearly describe all matters discussed and shall provide a full and accurate summary of actions taken and the reasons therefor, including a description of each of the views expressed on any item and the record of all roll-call vote reflecting the vote of each member of the question. All documents considered in connection with any action will be identified in such minutes.

(b) The retention period for the records required by paragraph (a) of this section will be for a period of at least two years after the particular Board meeting or until one year after the conclusion of any Board proceeding with respect to which the meeting or portion thereof was held, whichever occurs later.

(c) The Secretary of the Board will make promptly available to the public the transcript, electronic recording, transcription of the recording, or minutes of the discussion of any item on the agenda of a Board meeting, except for such item or items of such discussion as the Board determines to contain information which may be withheld on the basis of one or more of the exemptions in §1600.6.

(d) Requests for public inspection of electronic recording, transcripts or minutes of Board meetings shall be made to the Assistant Secretary of the Board of Directors of the Rural Telephone Bank, room 4051-South Building, U.S. Department of Agriculture, 14th Street and Independence Avenue SW., Washington, DC 20250. Requests for inspection or copies of transcripts shall specify the date of the meeting, the name of the agenda and the agenda item number; this information will appear in the notice of the meeting.

(e) The transcripts, minutes, or transcriptions of electronic recordings of a Board meeting will disclose the identity of each speaker, and will be furnished to any person at the actual cost of transcription or duplication.

PART 1610—LOAN POLICIES

Sec.
1610.1 General.
1610.2 Definitions.
1610.3 Loan authorizations.
1610.4 Loan applications.
1610.5 Minimum Bank loan.
1610.6 Concurrent Bank and RUS cost-of-money loans.
1610.7 Acquisition of certain exchange facilities.
1610.8 Adoption of applicable RUS policy.
1610.9 Class B stock.
1610.10 Determination of interest rate on Bank loans.
1610.11 Prepayments.

AUTHORITY: 7 U.S.C. 941 *et seq.*; Pub. L. 103–354, 108 Stat. 3178 (7 U.S.C. 6941 *et seq.*).

SOURCE: 38 FR 17184, June 29, 1973, unless otherwise noted.

EDITORIAL NOTE: Nomenclature changes to this part appear at 59 FR 66439, Dec. 27, 1994.

§ 1610.1 General.

Loans made by the Governor of the Rural Telephone Bank (the ''Bank'') will be made in conformance with title IV of the Rural Electrification Act of 1936 (the ''Act''), as amended (7 U.S.C. 941 *et seq.*), and this part 1610. Loans are made under section 408(a)(1) of the Act for purposes of section 201 of the Act. Loans are also made for purposes of section 408(a)(2) of the Act. The Bank will give preference to the use of loan funds for purposes set forth in section 408(a)(2) of the Act to the extent that it has completed applications for such loans.

[38 FR 17184, June 29, 1973, as amended at 58 FR 66252, Dec. 20, 1993]

§ 1610.2 Definitions.

As used in this part:

Act means the Rural Electrification Act of 1936, as amended (7 U.S.C. 901 *et seq.*).

Appropriated means funds appropriated based on subsidy.

Bank means the Rural Telephone Bank, an agency and instrumentality of the United States within the United States Department of Agriculture.

Borrower means any organization which has an outstanding telephone loan made by the Bank or RUS, or guaranteed by RUS, or which is seeking such financing.

Governor means the Governor of the Bank.

REA means the Rural Electrification Administration, formerly an agency of the United States Department of Agriculture and predecessor agency to RUS with respect to administering certain electric and telephone loan programs.

RUS means the Rural Utilities Service, an agency of the United States Department of Agriculture established pursuant to Section 232 of the Federal Crop Insurance Reform and Department of Agriculture Reorganization Act of 1994 (Pub.L. 103–354, 108 Stat. 3178), successor to REA with respect to administering certain electric and telephone programs. See 7 CFR 1700.1.

RUS cost-of-money-loan means a loan made under section 305(d)(2) of the Act bearing an interest rate as determined under 7 CFR 1735.31(c). RUS cost-of-money loans are made concurrently with Bank loans.

TIER (Times Interest Earned Ratio) means the ratio of the borrower's net income (after taxes) plus interest expense, all divided by interest expense. For the purpose of this calculation, all amounts will be annual figures and interest expense will include only interest on debt with a maturity greater than one year.

[58 FR 66252, Dec. 20, 1993, as amended at 59 FR 66439, Dec. 27, 1994]

§ 1610.3 Loan authorizations.

The aggregate amount of loans made will not exceed the amount authorized by the Board of Directors (the ''Board'') of the Bank.

[38 FR 17184, June 29, 1973. Redesignated at 58 FR 66252, Dec. 20, 1993]

§ 1610.4 Loan applications.

No application for a loan will be considered for approval by the Bank until it has been reviewed by RUS and the Governor has determined, based on such review, the eligibility of the applicant for a Bank loan and the amount thereof. Loan application forms are available from RUS on request. No fees or charges are assessed for Bank loans.

[58 FR 66252, Dec. 20, 1993]

§ 1610.5 Minimum Bank loan.

A Bank loan will not be made unless the applicant qualifies for a Bank loan of at least $50,000.

[38 FR 17184, June 29, 1973. Redesignated at 58 FR 66252, Dec. 20, 1993]

§ 1610.6 Concurrent Bank and RUS cost-of-money loans.

(a) The Bank makes loans, under section 408 of the Act, concurrently with RUS cost-of-money loans made under section 305(d)(2) of the Act. To qualify for concurrent Bank and RUS cost-of-money loans on or after November 1, 1993, a borrower must meet each of the following requirements:

(1) The average number of proposed subscribers per mile of line in the service area of the borrower is not more than 15, or the borrower has a projected TIER (including the proposed loans) of at least 1.0, but not greater than 5.0, as determined by the feasibility study prepared in connection with the loans, see 7 CFR part 1737, subpart H; and

(2) The Administrator of RUS has approved and the borrower is participating in a telecommunications modernization plan for the state, see 7 CFR part 1751, subpart B.

(b) The loan amounts from each program (Bank, including amounts for class B stock, and RUS cost-of-money) will be proportionate to the total amount of funds appropriated for the fiscal year for Bank loans and RUS cost-of-money loans. To determine the Bank portion, the total loan amount will be multiplied by the ratio of Bank funds appropriated for the fiscal year to the sum of RUS cost-of-money and Bank funds appropriated for the fiscal year in which the loan is approved. The same method would be used to calculate the RUS cost-of-money portion (see 7 CFR 1735.31(b)). If during the fiscal year the amount of funds appropriated changes, the ratio will be adjusted accordingly and applied only to those loans approved afterwards.

(c) The actual rate of interest on the Bank loan shall be determined as provided in §1610.10; the RUS cost-of-money loan shall bear interest at a rate equal to the current cost of money to the Federal Government, on the date of advance of funds to the borrower, for loans of similar maturity, but not more than 7 percent per year (see 7 CFR 1735.31(c)).

(d) Generally, no more than 10 percent of lending authority from appropriations in any fiscal year for Bank and RUS cost-of-money loans may be loaned to a single borrower. The Bank will publish by notice in the FEDERAL REGISTER the dollar limit that may be loaned to a single borrower in that particular fiscal year based on approved Bank and RUS lending authority.

[58 FR 66252, Dec. 20, 1993, as amended at 62 FR 46869, Sept. 5, 1997]

§1610.7 Acquisition of certain exchange facilities.

In the interest of making optimum use of the Bank's loan funds, a Bank loan for the acquisition of exchange facilities under section 408(a)(2) of the Act (7 U.S.C. 948(a)(2)) will not be recommended by the Governor for approval by the Secretary of Agriculture unless the Governor determines that the acquisition is reasonably necessary to improve the efficiency, effectiveness, or financial stability of the borrower's telephone system, that the location and character of the proposed acquisition are such that the acquisition is reasonably necessary to accomplish such improvement, and that the amount of the requested loan for such acquisition is reasonably justified by the nature and scope of the improvement which the acquisition would effect.

§1610.8 Adoption of applicable RUS policy.

The policies embodied in 7 CFR part 1610, in all parts of 7 CFR chapter XVII except those identified below, will be utilized by the Governor in carrying out the Bank's loan program to the extent that such policies are consistent with title IV of the Act (7 U.S.C. 941 *et seq.*) and to the extent that policies in 7 CFR chapter XVII are consistent with 7 CFR part 1610. The parts of 7 CFR chapter XVII applicable solely to the Electric Program and thus exceptions to this section are parts 1710 through 1734 inclusive.

[55 FR 39397, Sept. 27, 1990]

§1610.9 Class B stock.

Borrowers receiving loans from the Bank shall be required to invest in class B stock at 5 percent of the total amount of loan funds advanced. Borrowers may purchase class B stock by:

(1) Paying an amount (using their own general funds) equal to 5 percent of the amount, exclusive of the amount for class B stock, of each loan advance, at the time of such advance; or

(2) Requesting that funds for the purchase of class B stock be included in the loan. If funds for class B stock are included in a loan, the funds for class B stock shall be advanced in an amount

equal to 5 percent of the amount, exclusive of the amount for class B stock, of each loan fund advance, at the time of such advance.

[56 FR 26596, June 10, 1991]

§ 1610.10 Determination of interest rate on Bank loans.

(a) All loan fund advances made on or after December 22, 1987 under Bank loans approved on or after October 1, 1987, shall bear interest at the rate determined as established below, but not less than 5 percent per annum.

(b) The interest rate for the period beginning on the date the advance is made and ending at the close of the fiscal year in which the advance is made shall be the average yield on the date of advance on outstanding marketable obligations of the United States having a final maturity comparable to the final maturity of the advance. The interest rate shall be determined to the nearest 0.01 percent.

(1) For this determination, the Bank will use yields on actively traded Treasury issues adjusted to constant maturities obtained from the *Federal Reserve statistical release* (''Treasury rate''). In accordance with standard Treasury procedures, the rate in effect for any given day is the rate set at the close of business on the preceding day. The 30-year Treasury rate will be applied to all advances with a final maturity of at least 30 years from date of advance. A straight-line interpolation between other Treasury rates will be used to determine the rate applicable for advances with final maturities of less than 30 years.

(2) The Bank will notify the borrower in writing of the interest rate that applies to each advance.

(c) After the fiscal year in which the advance is made, the interest rate applied to the advance will be the sum of the calculations made in paragraphs (c)(1) through (5) of this section. This interest rate determination shall be made by the Governor within 30 days of the end of each fiscal year and shall be determined to the nearest 0.01 percent.

(1) The aggregate of all amounts received by the Bank during the fiscal year from the issuance of Class A stock, multiplied by the rate of return payable by the Bank during the fiscal year as specified in section 406(c) of the Act, which product is divided by the aggregate of the amounts advanced by the Bank during the fiscal year.

(2) The aggregate of all amounts received by the Bank during the fiscal year from the issuance of Class B stock, multiplied by the rate at which dividends are payable by the Bank during the fiscal year as specified in section 406(d) of the Act, which product is divided by the aggregate of the amounts advanced by the Bank during the fiscal year. Section 406(d) provides that ''No dividends shall be payable on Class B stock.'' The ''amounts received by the Bank during the fiscal year from the issuance of Class B stock'' means the amount of cash received during the fiscal year for the purchase of Class B stock, plus the amount advanced to borrowers by the Bank during the fiscal year for such purchases, less any Class B stock that is rescinded during the fiscal year.

(3) The aggregate of all amounts received by the Bank during the fiscal year from the issuance of Class C stock, multiplied by the rate at which dividends are payable by the Bank during the fiscal year as specified in section 406(e) of the Act, which product is divided by the aggregate of the amounts advanced by the Bank during the fiscal year.

(4) The amounts received by the Bank during the fiscal year from each issue of telephone debentures and other obligations of the Bank, multiplied, respectively, by the rates at which interest is payable by the Bank during the fiscal year to holders of each issue, each of which product is divided, respectively, by the aggregate of the amounts advanced by the Bank during the fiscal year.

(5) The amount by which the aggregate of the amounts advanced by the Bank during the fiscal year exceeds the aggregate of the amount received by the Bank from the issuance of Class A stock, Class B stock, Class C stock, and telephone debentures and other obligations of the Bank during the fiscal year, multiplied by the historic cost of money rate as of the close of the immediately preceding fiscal year, which product is divided by the aggregate of

the amounts advanced by the Bank during the fiscal year.

(6) As used in paragraph (c)(5) of this section, the term ''historic cost of money rate as of the close of the immediately preceding fiscal year,'' means the sums of the results of the following calculations: The amounts advanced by the Bank in each fiscal year during the period beginning with fiscal year 1974 and ending with the immediately preceding fiscal year, multiplied, respectively, by the cost of money rate for the fiscal year (as set forth in Table I for fiscal years 1974 through 1987, and as determined by the Governor in paragraphs (c) (1) through (5) of this section for fiscal years after fiscal year 1987), with each product then divided by the aggregate of the amounts advanced by the Bank from the beginning of fiscal year 1974 through the end of the fiscal year just ended.

TABLE I

For advances made in fiscal year:	The cost of money rate shall be:
1974	5.01 percent.
1975	5.85 percent.
1976	5.33 percent.
1977	5.00 percent.
1978	5.87 percent.
1979	5.93 percent.
1980	8.10 percent.
1981	9.46 percent.
1982	8.39 percent.
1983	6.99 percent.
1984	6.55 percent.
1985	5.00 percent.
1986	5.00 percent.
1987	5.00 percent.

In this table, ''fiscal year'' means the 12-month period ending on September 30 of the designated year.

(d) A borrower with a Bank loan approved on or after October 1, 1987, and before December 22, 1987, and with funds not fully advanced as of December 22, 1987, may until the next advance under the loan or March 21, 1988, whichever is later, elect to have the interest rate specified in the loan commitment apply to the unadvanced portion in lieu of the rate which would otherwise apply as set forth in § 1610.10(a). A borrower making such an election shall contact, in writing, the applicable Area Office of RUS. The Governor shall then adjust the interest rate that applies to the unadvanced portion of the loan accordingly.

(e) If the Bank, pursuant to section 407(b) of the Act, issues telephone debentures to refinance outstanding telephone debentures or other obligations, the Bank shall reduce the interest rate charged on each advance of Bank loan funds made during the fiscal year(s) in which the refinanced debentures or other obligations were originally issued. The reduction shall be for the period beginning on the issue date of the refinancing debentures and ending on the date the advance matures or is completely prepaid, whichever is earlier. This reduction shall be in addition to any other interest rate reduction required by section 408(b)(3) of the Act. The interest rate shall be reduced by the amount which fully reflects that percentage of the funds saved by the Bank as a result of the refinancing which is equal to the percentage representation of the advance of all advances made during the fiscal year(s) involved. In no case, however, shall the interest rate be reduced to less than 5 percent per annum. The interest rate reduction for each advance shall be determined as follows:

(1) The funds saved by the Bank as a result of the refinancing shall be computed.

(2) The advance shall be divided by the total of all advances made during the fiscal year(s) involved, and stated to the nearest .01 percent.

(3) The percentage in paragraph (e)(2) of this section is multiplied by the amount in paragraph (e)(1) of this section to determine the savings for a particular advance. The interest rate on that advance is then reduced to fully reflect the savings over the remaining amortization period of the loan from which the advance was made.

(f) Within 60 days after the issue date described in paragraph (e) of this section, the Governor shall amend the loan documentation for each advance described in paragraph (e) of this section, as necessary, to reflect any interest rate reduction applicable to the advance by reason of paragraph (e) of this section, and shall notify each affected borrower of the reduction.

(g) Within 5 days of determining the cost of money rate for a fiscal year, the Governor shall:

(1) Cause the determination to be published in the FEDERAL REGISTER in accordance with section 552 of title 5, United States Code, and

(2) Furnish a copy of the determination to the Comptroller General of the United States.

(h) A borrower should not wait until the end of the fiscal year to submit a requisition for an advance of loan funds if it wants the advance made in that fiscal year. Borrower requisitions submitted late in the fiscal year may not be processed in that fiscal year because of workload and other factors.

[53 FR 36783, Sept. 22, 1988; 53 FR 39014, Oct. 4, 1988]

§ 1610.11 Prepayments.

(a) Bank loans approved before November 1, 1993, may be prepaid in accordance with the terms thereof, including payment of the premium as provided therein.

(b) A borrower may prepay part or all of a Bank loan made on or after November 1, 1993, by paying the outstanding principal and any accrued interest without being required to pay a prepayment premium.

(c) Borrowers that qualify to issue a refunding note or notes in accordance with 7 CFR 1735.43, Payments on loans, shall not be required to pay a prepayment premium on all payments made in accordance with the new payment schedule.

[58 FR 66252, Dec. 20, 1993, as amended at 62 FR 46869, Sept. 5, 1997]

CHAPTER XVII—RURAL UTILITIES SERVICE, DEPARTMENT OF AGRICULTURE

EDITORIAL NOTE: Nomenclature changes to Chapter XVII appear at 59 FR 66440, Dec. 27, 1994.

Part		*Page*
1700	General information	17
1703	Rural development	46
1710	General and pre-loan policies and procedures common to insured and guaranteed electric loans	103
1714	Pre-loan policies and procedures for insured electric loans	148
1717	Post-loan policies and procedures common to insured and guaranteed electric loans	154
1718	Loan security documents for electric borrowers	204
1721	Post-loan policies and procedures for insured electric loans	245
1724	Electric system planning and design policies and procedures	246
1726	Electric system construction policies and procedures	248
1728	Electric standards and specifications for materials and construction	425
1730	Electric system operations and maintenance [Reserved]	
1735	General policies, types of loans, loan requirements—telecommunications program	449
1737	Pre-loan policies and procedures common to insured and guaranteed telecommunications loans	471
1741	Pre-loan policies and procedures for insured telephone loans [Reserved]	
1744	Post-loan policies and procedures common to guaranteed and insured telephone loans	486
1748	Post-loan policies and procedures for insured telephone loans [Reserved]	
1751	Telecommunications system planning and design criteria, and procedures	497

Part
1753 Telecommunications system construction policies and procedures 502
1755 Telecommunications standards and specifications for materials, equipment and construction 542
1757 Telephone systems operations and maintenance [Reserved]
1767 Accounting requirements for RUS electric borrowers 871
1770 Accounting requirements for RUS telephone borrowers 1086
1773 Policy on audits of RUS borrowers 1107
1775 Technical assistance and training grants 1150
1777 Section 306C WWD loans and grants 1156
1778 Emergency Community Water Assistance Grants .. 1160
1780 Water and waste loans and grants 1165
1781 Resource Conservation and Development (RCD) loans and Watershed (WS) loans and advances 1204
1785 Loan account computations, procedures and policies for electric and telephone borrowers 1221
1786 Prepayment of RUS guaranteed and insured loans to electric and telephone borrowers 1223
1788 RUS fidelity and insurance requirements for electric and telephone borrowers 1254
1789 Use of consultants funded by borrowers 1264
1792 Compliance with other Federal statutes, regulations, and Executive orders 1269
1794 Environmental policies and procedures for electric and telephone borrowers 1271

PART 1700—GENERAL INFORMATION

Subpart A—Organization and Functions

Sec.
1700.1 General.
1700.2 Office of the Administrator.
1700.3 Office of the Deputy Administrator—Program Operations.
1700.4 Rural electric program.
1700.5 Rural telephone program.
1700.6 Economic development and technical services.
1700.7 Office of the Deputy Administrator—Management and Policy Support.
1700.8 Office of Assistant Administrator—Management.
1700.9 Information, legislation, policy and management analysis.
1700.10—1700.19 [Reserved]

Subpart B—Programs

1700.20 Insured electric loans pursuant to section 305 of the Rural Electrification Act, as amended.
1700.21 Insured telephone loans pursuant to section 305 of the Rural Electrification Act, as amended.
1700.22 Rural Telephone Bank loans pursuant to section 408 of the Rural Electrification Act, as amended.
1700.23 Guaranteed loans pursuant to section 306 of the Rural Electrification Act, as amended.
1700.24 Loans and grants pursuant to section 313 of the RE Act.
1700.25 Other loan authorities.
1700.26 Studies, investigations, and reports.
1700.27 Loan security activities.
1700.28 Issuances implementing procedure.
1700.29 [Reserved]

Subpart C—Public Information

1700.30 Availability of Agency publications and other information, and collection of public comments to proposed rules.
1700.31 Indexes.
1700.32 Requests for records.
1700.33 Appeals.

Subpart D—Delegations of Authority; General

1700.40 Exercise of delegated authority.
1700.41 Persons serving in acting capacities.
1700.42 Persons serving as acting Administrator.
1700.43 Persons serving as acting Assistant Administrator.
1700.44 Contracts approved on behalf of the Administrator.
1700.45—1700.59 [Reserved]

Subpart E—Delegations of Authority; Agency Issuances and Certain Correspondence

1700.60 Agency issuances.
1700.61 Agency publications control officer.
1700.62—1700.69 [Reserved]

Subpart F—Delegations; Authorities Reserved by the Administrator

1700.70 General.
1700.71 Rural economic development loan and grant and distance learning and medical link grant programs.
1700.72 Electric program.
1700.73 Telephone program.
1700.74—1700.89 [Reserved]

Subpart G—Delegations of Authority; Loan Review Committees

1700.90 General.
1700.91 Senior loan review committee.
1700.92 Assistant Administrator's loan committee.
1700.93 Rural economic development recommendation committee.
1700.94—1700.99 [Reserved]

Subpart H—Delegations of Authority; Rural Economic Development, Program Support, and Borrower Accounting Activities

1700.100 General.
1700.101 Deputy Administrator.
1700.102 Assistant Administrator—Economic Development and Technical Services.
1700.103 Director—Rural Development Assistance Staff.
1700.104 Chief, Financing Branch—Rural Development Assistance Staff.
1700.105 Director, Borrower Accounting Division.
1700.106 Chief, Technical Accounting and Auditing Staff.
1700.107 Chiefs, Area Accounting Branches.
1700.108 Field Accountants.
1700.109 Director—Program Support Staff.
1700.110—1700.119 [Reserved]

Subpart I—Delegations of Authority; Electric Program

1700.120 General.
1700.121 Deputy Administrator.
1700.122 Assistant Administrator—Electric.
1700.123 Deputy Assistant Administrator—Electric.
1700.124 Regional Directors.
1700.125 Chiefs, Regional Engineering Branches.
1700.126 Chiefs, Area Operations Branches.
1700.127 Director—Power Supply Division.
1700.128 Chief, Operations Branch, Power Supply Division.

1700.129 Chiefs, Power Engineering Branches, Power Supply Division.
1700.130 General Field Representatives—Electric.
1700.131 Director, Electric Staff Division.
1700.132 Technical Standards Committees ''A'' and ''B''—Electric.
1700.133—1700.139 [Reserved]

Subpart J—Delegations of Authority; Telephone Program

1700.140 General.
1700.141 General delegations.
1700.142 Deputy Administrator.
1700.143 Assistant Administrator—Telephone.
1700.144 Deputy Assistant Administrator—Telephone.
1700.145 Regional Directors.
1700.146 Chiefs, Regional Engineering Branches—Telephone.
1700.147 Chiefs, Regional Operations Branches—Telephone.
1700.148 General Field Representatives—Telephone.
1700.149 Director—Telecommunications Standards Division.
1700.150 Technical Standards Committees ''A'' and ''B''—Telephone.
1700.151—1700.159 [Reserved]

Subpart K—Delegations of Authority; Financial Services

1700.160 General.
1700.161 Program Advisor, Financial Services Staff.
1700.162—1700.169 [Reserved]

Subpart L—Delegations of Authority; Financial Operations Activities

1700.170 General.
1700.171 Deputy Administrator.
1700.172 Director, Financial Operations Division.
1700.173 Chief, Loans Receivable Branch.
1700.174—1700.189 [Reserved]

AUTHORITY: 7 U.S.C. 901 *et seq.*; Pub. L. 103–354, 108 Stat. 3178 (7 U.S.C. 6941 *et seq.*); 7 U.S.C. 1921 *et seq.*; 5 U.S.C. 301, 552; 7 CFR 1.1–1.16.

SOURCE: 55 FR 39596, Sept. 28, 1990, unless otherwise noted.

Subpart A—Organization and Functions

SOURCE: 57 FR 6285, Feb. 24, 1992, unless otherwise noted.

§ 1700.1 General.

(a) The Rural Electrification Administration (REA) was established by Executive Order No. 7037, signed by the President on May 11, 1935. Statutory authority was provided by the Rural Electrification Act of 1936 (RE Act) (49 Stat. 1363; 7 U.S.C. 901). The RE Act established REA as a lending agency with responsibility for developing a program for rural electrification.

(b) On October 28, 1949, an amendment to the RE Act authorized REA to make loans to improve and extend telephone service in rural areas. The Rural Telephone Bank (RTB or the Bank), an Agency of the United States, was established by another amendment to the RE Act, approved May 7, 1971. The Administrator of RUS serves as the Bank's chief executive with the title of Governor. On May 11, 1973, the RE Act was further amended to establish a revolving fund and to provide authority for REA to guarantee loans made by other legally organized lenders. The RE Act was amended further on December 21, 1987, to establish a Rural Economic Development Subaccount, and to authorize funds from this subaccount to provide zero-interest loans and grants to REA borrowers to promote rural economic development and job creation. The RE Act was also amended on November 5, 1990, to add a new section 314, which authorized REA to guarantee 90 percent of the principal and interest of loans made for electric and telephone facilities by legally organized lenders. It was further amended on November 28, 1990, to establish an Assistant Administrator for Economic Development and a rural development technical assistance unit; to expand the authorities and responsibilities of REA in rural economic development; and to establish a Rural Business Incubator Fund for making grants and reduced interest loans to electric and telephone borrowers to promote business incubator projects. At the same time, the Administrator was also granted authority for financial assistance for distance learning and medical link programs.

(c) The Secretary of Agriculture (Secretary) was required to establish the Rural Utilities Service (RUS) pursuant to section 232 of the Federal Crop

Insurance Reform and Department of Agriculture Reorganization Act of 1994, (Pub. L. 103–354, 108 Stat. 3178) (Reorganization Act). The Reorganization Act established RUS as successor to REA. On October 20, 1994, the Secretary abolished REA and established RUS. RUS was assigned responsibility for administering electric and telephone loan programs previously administered by REA, water and waste facility loans and grants previously administered by the Rural Development Administration, along with other functions as the Secretary determines appropriate. The rights, interests, obligations, duties, and contracts previously vested in REA are transferred to and vested in RUS. The Secretary designated the Administrator of RUS to serve as the Governor of RTB.

(d) The offices of RUS are located in the South Building of the United States Department of Agriculture at 14th and Independence Avenue, SW., Washington, DC 20250–1500. The Electric and Telephone Programs are administered by regional offices located at this same address. There is a Northern and a Southern Regional Office, along with a Power Supply Division, for the electric program, and an Eastern and a Western Regional Office for the telephone program. (See §1700.4(b) and §1700.5(b).)

[59 FR 66440, Dec. 27, 1994]

§1700.2 Office of the Administrator.

(a) The Administrator (who also serves as Governor of the RTB) is appointed by the President, with the advice and consent of the Senate, for a term of 10 years. The Administrator functions as the chief executive of the Agency under the general supervision and direction of the Under Secretary for Rural Economic and Community Development. The Administrator is aided directly by two Deputy Administrators and by Assistant Administrators for the Electric Program, the Telephone Program, for Economic Development and Technical Services, and for Management. The Financial Services Staff and the Equal Opportunity and Civil Rights Staff also report directly to the Administrator. The work of the Agency is carried out through the offices and divisions described in this part.

(b) The Financial Services Staff performs the following functions:

(1) Evaluates financial conditions of financially troubled borrowers;

(2) Negotiates settlements and ''work-outs'' of financially troubled borrowers who have or may have delinquent loans in order to satisfy the government's interests, keeping abreast of financial and legal factors that may affect the negotiations;

(3) Coordinates the Agency's efforts to identify and develop strategies for potentially financially troubled borrowers;

(4) Develops techniques and criteria for evaluating the financial and operating performance of certain rural electric and telephone borrowers;

(5) Develops certain standards, policies, and procedures in connection with loan requirements and processing for the electric and telephone programs;

(6) Analyzes and evaluates certain loan requests and transactions to determine whether the documentation justifies the request;

(7) Serves as staff to the Senior Loan Committee;

(8) Keeps other government organizations advised concerning activities of the staff; and

(9) Serves as RUS liaison to the capital markets.

(c) The Equal Opportunity and Civil Rights Staff administers the program for equal opportunity in the delivery of services and benefits by RUS borrowers and in the employment practices in the Agency. The staff:

(1) Formulates and coordinates plans, policies and procedures for a nationwide program of nondiscrimination on the part of RUS borrowers in carrying out borrower programs subject to the provisions of title VI of the Civil Rights Act of 1964 (42 U.S.C. 2000a–2000h–6); section 504 of the Rehabilitation Act of 1973 (29 U.S.C. 701 *et seq.*); the Age Discrimination Act of 1975 (42 U.S.C. 6101–6107); the Americans with Disabilities Act of 1990 (42 U.S.C. 12101 *et seq.*); and Executive Order 11246 (3 CFR, 1964–1965 Comp., p. 339), as amended by Executive Orders 11375 (3 CFR, 1966–1970 Comp., p. 684) and 12086 (3 CFR, 1978 Comp., p. 230).

(2) Develops and monitors plans, policies and programs designed to promote equal employment opportunity for RUS personnel under title VII of the Civil Rights Act of 1964; the Age Discrimination in Employment Act of 1967 (29 U.S.C. 621–634); the Equal Employment Opportunity Act of 1972 (42 U.S.C. 2000e *et seq.*); section 501 of the Rehabilitation Act of 1973; pertinent provisions of the Civil Service Reform Act of 1978 (5 U.S.C. 1101 *et seq.*); and applicable rules, regulations and other equal employment, nondiscrimination statutes.

§ 1700.3 Office of the Deputy Administrator—Program Operations.

The Deputy Administrator—Program Operations directs and coordinates the electric, telephone and rural economic development programs, technical services, and borrower accounting activities; reviews Agency policies in these areas and, as necessary, implement changes; and participates with the Administrator and other officials in planning and formulating the programs and activities of the Agency.

§ 1700.4 Rural electric program.

(a) The Assistant Administrator—Electric directs and coordinates the rural electrification program of the Agency, participating with the Administrator and Deputy Administrator—Program Operations and others in planning and formulating the programs and activities of the Agency.

(b) *Regional Offices.* (1) The two regional offices are the primary points of contact between RUS and electric distribution system borrowers. Each office administers the rural electric program for an assigned geographical area with assistance of field representatives located in areas assigned to them. The regional offices are composed of the following states and territories:

(i) *Northern Region.* Alaska, Connecticut, Delaware, Hawaii, Idaho, Illinois, Indiana, Iowa, Kentucky, Maine, Maryland, Massachusetts, Michigan, Minnesota, Montana, New Hampshire, New Jersey, New York, North Dakota, Ohio, Oregon, Pennsylvania, Rhode Island, South Dakota, Vermont, Virginia, Washington, West Virginia, Wisconsin, Wyoming, and present and former Pacific Trust Territories; and

(ii) *Southern Region.* Alabama, Arizona, Arkansas, California, Colorado, Florida, Georgia, Kansas, Louisiana, Mississippi, Missouri, Nebraska, Nevada, New Mexico, North Carolina, Oklahoma, Puerto Rico, South Carolina, Tennessee, Texas, Utah, and the Virgin Islands.

(2) The regional offices perform the following functions with respect to loan feasibility and security and accomplishment of the purposes of the RE Act:

(i) Administer the rural electrification program for distribution borrowers in the region, serving as the single point of contact for distribution borrowers;

(ii) Provide guidance to borrowers on Agency loan policies and procedures, and receives, evaluates, and processes insured and guaranteed loan applications and other requests for financing assistance;

(iii) If delegated the authority by the Administrator, Regional Directors may approve certain loans, lien accommodations and other actions;

(iv) Assure that distribution and transmission systems and facilities are designed and constructed in accordance with the terms of the loan and proper engineering practices and specifications;

(v) Maintain oversight of borrower rate actions;

(vi) Provide guidance to borrowers on supplemental power resources; load and energy management; and the environmental aspect of the design, construction and operation of their systems;

(vii) Maintain necessary oversight of borrowers' financial management and technical operations and practices to assure the security of the government's loans. Institute operations and management studies or other forms of corrective action as necessary;

(viii) Works to ensure accountability of loan and other financial transactions; and

(ix) Supplements efforts of the Equal Opportunity and Civil Rights Staff to ensure borrower compliance with civil rights requirements.

(c) *Power Supply Division.* The Division performs the following functions:

(1) Administers rural electrification program responsibilities that relate to power supply borrowers, and serves as the primary point of contact between RUS and all such borrowers;

(2) Receives, evaluates, and processes insured and guaranteed loan applications and other requests for financial assistance from power supply borrowers;

(3) Develops and administers engineering and construction functions related to planning, design, construction, operation, and maintenance for power supply borrowers;

(4) Maintains a continuing financial and management overview of power supply borrowers to ensure that their operations are consistent with sound fiscal policies and procedures, loan security, and with RUS loan contracts, mortgages and regulatory requirements. Initiates operations and management studies or other forms of corrective action as necessary;

(5) Provide guidance to borrowers on supplemental power resources; load and energy management; and the environmental aspects of the design, construction and operations of their systems;

(6) Works to ensure accountability of loan and other financial transactions; and

(7) Supplements efforts of the Equal Opportunity and Civil Rights Staff to ensure borrower compliance with civil rights requirements.

(d) *Electric Staff Division*. This division administers certain engineering and operating activities relating to the rural electric program. The division:

(1) Is responsible for engineering aspects of RUS's standards, specifications and other requirements with respect to design, construction, and technical operation and maintenance of power-plant, distribution, and transmission systems and facilities, including load management, energy conservation and communications;

(2) Develops engineering practices, policies, standards, and guidelines for the Agency relating to electric borrowers' systems; conducts analysis and provides guidance on matters relating to fuels for electric generating stations; analyzes the effects of environmental laws and regulations on RUS-financed electric systems; and develops related policies and procedures for the Agency;

(3) Develops criteria, procedures and analyses for improvement of the operating performance of electric borrowers;

(4) Develops procedures, criteria and techniques for forecasting borrowers' power requirements; and develops and maintains expertise in matters relating to retail and wholesale rates;

(5) Develops policies and procedures for adherence to environmental laws and regulations, and reviews borrowers' environmental studies;

(6) Maintains and publishes a continuing updated list of materials compatible with current RUS standards;

(7) From time to time provides consultation with borrowers regarding engineering matters;

(8) Provides assistance to the other electric offices and, as appropriate, to borrowers; and

(9) Maintains liaison with other Government agencies, utilities, industry officials and professional organizations on the above matters.

§1700.5 Rural telephone program.

(a) The Assistant Administrator—Telephone directs and coordinates the rural telephone program of the Agency, participating with the Administrator and Deputy Administrator—Program Operations and other officials in planning and formulating the programs and activities of the Agency.

(b) *Regional Offices*. (1) The two regional offices are the primary points of contact between RUS and all telephone system borrowers. Each office administers the rural telephone program for an assigned geographical area with assistance of field representatives located in areas assigned to them.

(2) The regional offices are composed of the following states and territories:

(i) *Eastern Region*. Alabama, Connecticut, Delaware, Florida, Georgia, Illinois, Indiana, Kentucky, Maine, Maryland, Massachusetts, Michigan, Mississippi, New Hampshire, New Jersey, New York, North Carolina, Ohio, Pennsylvania, Puerto Rico, Rhode Island, South Carolina, Tennessee, Vermont, Virginia, Virgin Islands, West Virginia, and Wisconsin; and

(ii) *Western Region.* Alaska, Arizona, Arkansas, California, Colorado, Hawaii, Idaho, Iowa, Kansas, Louisiana, Minnesota, Missouri, Montana, Nebraska, Nevada, New Mexico, North Dakota, Oklahoma, Oregon, South Dakota, Texas, Utah, Washington, Wyoming and present and former Pacific Trust Territories along with the Northern Mariana Islands and Guam.

(3) The regional offices have the following responsibilities with respect to loan feasibility and security and accomplishment of the purposes of the RE Act:

(i) Provide guidance to applicants and borrowers on Agency and Rural Telephone Bank loan policies and procedures, and make recommendations to the Administrator on applications for loans or guarantees. If delegated the authority by the Administrator, Area Directors may approve certain loans, lien accommodations and other actions;

(ii) Review and analyze borrowers' toll revenue settlements and local service rates for adequacy to meet loan service payments and other expenses;

(iii) Assure that telephone systems and facilities are designed and constructed in accordance with the terms of the loan and the Agency's regulations. They review, analyze and approve borrowers' engineering plans and specifications; engineering, equipment and construction contracts; and borrowers' payments to engineers and contractors. They work with the borrowers to assure that completed construction meets RUS standards for quality of service and loan security; and

(iv) Provide information to borrowers regarding management and technical operations and practices with respect to the feasibility and security of the Government's loans and achievement of RE Act purposes.

(c) *Telecommunications Standards Division.* This division administers engineering staff activities related to the design, construction, and technical operation and maintenance of rural telephone systems and facilities. The division:

(1) Develops Agency engineering practices, policies, guidelines and technical data relating to telephone borrowers' systems;

(2) Evaluates the application of new communications network technology to rural telephone systems;

(3) Develops standards, policies, and procedures in connection with construction activities financed by the rural telephone program;

(4) Provides advice and assistance to the regional offices and, as requested, to borrowers on the above functions and responsibilities; and

(5) Maintains liaison with other government agencies, utilities, industry officials, and professional organizations on the above matters.

(d) *Rural Telephone Bank Management Staff.* This staff performs the following functions:

(1) Prepares analyses and makes recommendations to the Assistant Governor of the RTB on RTB issues;

(2) Performs the calculations needed to determine the cost of money rate to RTB borrowers;

(3) Prepares the minutes of RTB board meetings;

(4) Develops practices and procedures for determining toll forecasts for the telephone regional offices, and develops the toll forecasts for borrowers with complicated settlement arrangements; and

(5) Maintains liaison with other government agencies, utilities, industry officials, and professional organizations on the above matters.

§ 1700.6 Economic development and technical services.

(a) The Assistant Administrator—Economic Development and Technical Services directs and coordinates the rural economic development and technical services programs of the Agency, participating with the Administrator and Deputy Administrator—Program Operations and other officials in planning and formulating the programs and activities of the Agency. Two staffs and one division report to this Assistant Administrator.

(b) *Rural Development Assistance Staff.* This staff performs the following functions:

(1) Administers the Agency's rural economic development and job creation programs;

(2) Formulates and develops regulations, procedures, directives, and bulletins concerning the execution of Agency rural economic development activities;

(3) In coordination with Agency personnel, provides guidance to borrowers on Agency rural economic development policies and procedures, and makes recommendations to the Administrator on borrowers' applications for rural economic development financial assistance;

(4) Provides economic and community development technical assistance to borrowers; and

(5) Advises Agency personnel on rural economic development matters.

(c) *Program Support Staff.* This staff has the following responsibilities:

(1) Prepares special and ongoing analyses regarding the operations of the Agency's loan, loan-guarantee, and grant programs, and supervises special projects as assigned;

(2) Develops and maintains Agency regulations and bulletins on pre-and post-loan policies and procedures, and provides advice and assistance to Agency staff and others regarding the achievement of program policies;

(3) Coordinates with corresponding program staffs regarding the implementation of program-wide policies;

(4) Coordinates joint program initiatives;

(5) Provides coordination and assistance on management development of RUS and borrower personnel, as assigned; and collaborates with borrowers' organizations and professional groups in management development;

(6) Develops and maintains a variety of loan fund control ledgers for electric and telephone program lending authorities; and

(7) Keeps abreast of external developments by state, local and Federal regulatory and legislative bodies relating to RUS programs.

(d) *Borrower Accounting Division.* This division ensures that accounting policies, systems and procedures with respect to borrowers' accounting operations meet regulatory, U.S. Department of Agriculture, General Accounting Office, Office of Management and Budget and Treasury Department requirements. The division:

(1) Provides recommendations and assistance in solving special program and administrative problems involving accounting interpretations and analysis, including the development and presentation of data to agency staff, regulatory bodies, and other agencies;

(2) Examines borrowers' records and operations and reviews expenditures of loan and other funds deposited in the RUS Construction Fund Account to determine that funds are expended in conformity with the RE Act. Reviews borrowers' plant accounting system and procedures to determine compliance with RUS regulations;

(3) Approves Certified Public Accountants to perform audits for borrowers and reviews their reports to determine conformance with acceptable accounting practices, procedures and standards;

(4) Develops proposed standards and procedures for Agency examination programs and evaluates adequacy and effectiveness of the review procedures; and

(5) Evaluates borrowers' accounting systems and procedures and recommends changes, as necessary, to provide for more complete and accurate reporting of borrowers' operations. Provides advice and assistance to borrowers concerning the installation and operation of accounting systems;

(e) *Area Offices.* The division is organized into four geographic area offices each of which has several field accountants located throughout the area.

§1700.7 Office of the Deputy Administrator—Management and Policy Support.

The Deputy Administrator—Management and Policy Support directs and coordinates the legislative, public information, administrative and budget activities of the Agency and participates with the Administrator and other officials in planning and formulating the programs, policies and other functions of the Agency. Activities are carried out by an Assistant Administrator—Management and others who report directly to the Deputy Administrator.

§ 1700.8 Office of Assistant Administrator—Management.

The Assistant Administrator—Management directs and coordinates the general administrative activities of the agency, participates with the Administrator and Deputy Administrators and other officials in planning and formulating the programs and activities of the agency. The Office of Budget and four other divisions are directed and coordinated by the Assistant Administrator—Management.

(a) The Office of Budget administers the budgetary and financial management program of the Agency. The office:

(1) Determines the annual funding needs for current and multi-year forecasts, participating with the Administrator in presenting and supporting the Agency's budget and program plans; and

(2) Administers budget execution, apportionment, allotment and use and control of all Agency funds.

(b) The Personnel Management Division administers the personnel program of the Agency, covering both headquarters and field personnel. The division.

(1) Administers the provisions of the Classification Act, to achieve uniform application of position classification principles and standards to all RUS positions; conducts organization studies and develops recommendations for changes; develops and administers the Agency's personnel management evaluation activities;

(2) Administers the employment program for the Agency, including staffing, recruitment, placement and separation; administers the Agency's merit promotion program; maintains liaison with the National Finance Center on personnel data processing activities including payroll;

(3) Administers Agency responsibilities for employee relations including: grievances and appeals, performance appraisals, performance recognition system, conflict of interest, awards, benefits, and leave;

(4) Directs, coordinates, and evaluates a program of employee training to achieve the maximum utilization of skills and abilities of personnel; conducts training sessions; plans and directs conferences; prepares training budget; approves training requests; and coordinates an information program for foreign visitors;

(5) Provides advice and assistance to Agency officials and employees to ensure sound and effective administration of the Agency's personnel program;

(6) Maintains working relations and liaison on personnel management matters with the staff and other agencies of the Department and other government agencies; and

(7) Participates with the Administrator, in conjunction with the Equal Opportunity and Civil Rights Staff, in the implementation and enforcement of USDA equal employment opportunity programs (see § 1700.2(c) (2)); coordinates equal employment opportunity complaint system with the Department; develops and administers the Agency's Federal Equal Opportunity Recruitment Program.

(c) The Administrative Services Division administers a wide array of management services. The division administers:

(1) General services involving contracting and procurement, space management, property and supplies management, records management and communications;

(2) The Agency's rulemaking and regulatory review activities, coordinating with the Office of the Federal Register, the Office of the General Counsel, and the Office of Management and Budget; and

(3) The Agency's publications issuance system and the forms and report program.

(d) The Automated Information Systems Division analyzes the application of data processing to RUS program activities, including feasibility studies of the costs and benefits of automated data processing. The division:

(1) Establishes standards and procedures for developing, maintaining and using the Agency's major automated systems covering borrower information, loan accounting and special management programs; performs systems analyses, development, and programming; and ensures data security;

(2) Operates the data processing equipment of the Agency, including the

conversion of data from source documents and the preparation of statements, reports, analyses, and other information, and provides training and assistance to users; and

(3) Collects and analyzes financial, operating, and other statistical data obtained from borrowers and other sources, and prepares reports on the progress and status of the programs of RUS and the RTB.

(e) The Financial Operations Division administers the fiscal accounting program of the agency and the RTB. The division:

(1) Develops, recommends and implements accounting policies, systems, and procedures regarding the Agency's and RTB's operations;

(2) Maintains accounts to provide control over and accountability for all funds, assets, liabilities, income and expenses of the Agency and the RTB; and prepares reports required by RUS, RTB, the U.S. Department of Agriculture, and other government agencies;

(3) Examines and certifies for payment, vouchers and invoices covering administrative expenses and loan fund advances of the Agency and the RTB;

(4) Reviews, examines and processes monthly billings and debt service payments for RUS and RTB loans;

(5) Reviews, examines and processes loan fund advances, billings, debt service payments and all other accounting related activities connected with Federal Financial Bank loans to RUS borrowers; and

(6) Maintains custody of the original copies of notes and mortgages and certain loan collateral.

§1700.9 Information, legislation, policy and management analysis.

The Deputy Administrator—Management and Policy Support, directs two separate staffs of the Agency dealing with public information and legislation, and policy and management analysis.

(a) The Legislative and Public Affairs Staff performs the following functions:

(1) Analyzes the policy, programs and procedural implications of Federal and State legislation affecting RUS programs; prepares special reports for the Administrator on legislative affairs; and responds to inquiries from Congress and others concerning RUS programs;

(2) Maintains liaison with the Department's legislative staff and with congressional offices;

(3) Manages the information activities of the Agency to provide borrowers and the public with timely information concerning the operations, status, progress and accomplishments of the rural electrification, rural telephone and rural development programs;

(4) Evaluates the public information activities of the Agency and advises on actions that will improve public understanding and acceptance of Agency functions; and

(5) Administers the public information provisions of 5 U.S.C. 551 *et seq.*, the Administrative Procedure Act.

(b) The Policy and Management Analysis Staff performs the following functions:

(1) Coordinates the development and monitors the implementation of the Agency's long-term program and management plans, ensuring that these plans are up to date at all times;

(2) Ensures that these long-term plans include quality-improvement, efficiency, and cost saving initiatives;

(3) Ensures that audit resolutions are incorporated in the Agency's strategic planning and other processes for establishing goals and objectives; and

(4) Initiates and coordinates management productivity programs of the Agency.

§§1700.10—1700.19 [Reserved]

Subpart B—Programs

§1700.20 Insured electric loans pursuant to section 305 of the Rural Electrification Act, as amended.

(a) *General.* These loans are made from the Rural Electrification and Telephone Revolving Fund for purposes authorized by section 4 of the RE Act. The standard interest rate on these loans is 5 percent, but a rate as low as 2 percent is authorized by section 305(b) of the RE Act if a borrower:

(1) Has experienced extreme financial hardship; or

(2) Cannot, in accordance with generally accepted management and accounting principles and without charging rates to its customers or subscribers so high as to create a substantial disparity between such rates and the rates charged for similar service in the same or nearby areas by other suppliers, provide service consistent with the objectives of the RE Act.

(b) These loans are made to finance the construction and operation of electric facilities and systems to provide initial and continued adequate electric service to persons in rural areas not receiving central station service at the time of the initial RUS loan. The loans, approval of which rests solely within the discretion of the Administrator, must be self-liquidating within a period not to exceed 35 years, and must be reasonably secured in the judgment of the Administrator. Under the RE Act, they may be made to persons, corporations, public bodies, and cooperative, non-profit, or limited dividend associations. Preference is given to public bodies and cooperative, nonprofit, or limited dividend associations.

(c) *Loan applications.* Applications for these loans are made on forms prescribed by RUS and supported by a resolution of the applicant's board of directors. Copies of these standard forms are made available by RUS on request. Loan applicants are assisted, as necessary, in preparing the loan application and supporting data. If an application is acceptable after legal, engineering, economic, and financial studies, funds are obligated by a loan contract and the borrower gives a note, mortgage and, in some cases, other security.

(d) *Construction.* Under the loan agreements, RUS reserves the right to approve the design and construction of the facilities, and to require progress reports on construction and audits of the borrower's records relating to construction.

(e) *Advance of loan funds.* Loan funds are advanced on the basis of requisitions submitted by borrowers in accordance with the loan contract and RUS regulations.

§ 1700.21 Insured telephone loans pursuant to section 305 of the Rural Electrification Act, as amended.

(a) *General.* (1) These loans are made from the Rural Electrification and Telephone Revolving Fund for purposes authorized by section 201 of the RE Act. The standard interest rate on these loans is 5 percent, but a rate as low as 2 percent is authorized by section 305(b) of the RE Act under the same conditions as specified in § 1700.20(a) of this part.

(2) These loans are made for the purpose of improvement, expansion, construction, acquisition and operation of telephone lines, facilities, or systems to furnish or improve telephone service in rural areas. Borrowers may be required to provide a portion of the investment themselves. The loans, approval of which rests solely within the discretion of the Administrator, must be repaid within a period, not to exceed 35 years, that approximates the expected useful life of the facilities financed and must be reasonably secured in the judgment of the Administrator. The loans may be made to any type of commercial or nonprofit corporation now providing or who may hereafter provide telephone service in rural areas. Preference is given to persons already providing telephone service in rural areas and to cooperative, nonprofit, limited dividend or mutual associations.

(b) *Loan applications.* Applications for these loans are made on forms prescribed by RUS, copies of which are available from RUS on request. Loan applicants are assisted, as necessary, in conducting area coverage surveys and in preparing loan applications. If an application is acceptable after legal, engineering, economic and financial studies, funds are obligated by a loan contract and the borrower gives a note, mortgage and, in some cases, other security.

(c) *Construction.* Under the loan agreements, RUS reserves the right to approve the design and construction of facilities and to require progress reports on construction and audits of the borrower's records relating to construction.

(d) *Advance of loan funds.* Loan funds are advanced on the basis of requisitions submitted by borrowers in accordance with the loan contract and 7 CFR part 1744.

[55 FR 39596, Sept. 28, 1990; 55 FR 42807, Oct. 23, 1990]

§1700.22 Rural Telephone Bank loans pursuant to section 408 of the Rural Electrification Act, as amended.

These loans are made for the purposes authorized by section 201 of the Act. The loans, approval of which rests solely within the discretion of the Governor, bear interest at a rate equal to the cost of funds to the Bank; must be repaid within a period, up to a maximum of 35 years, that approximates the expected useful life of the facilities financed; and must be reasonably secured in the judgement of the Administrator. These loans are administered by RUS staff as part of the rural telephone program pursuant to the policies and procedures set forth in 7 CFR part 1610.

§1700.23 Guaranteed loans pursuant to section 306 of the Rural Electrification Act, as amended.

These loans are made by any legally organized lending agency and guaranteed in the full amount thereof by the Administrator for purposes provided in the RE Act, including without limitation, distribution, sub-transmission, bulk transmission and generation facilities. The loans guaranteed under this section are serviced by the lender except that loans made by the Federal Financing Bank are serviced by RUS. The interest rate on these loans is as agreed upon by the borrower and the lender.

[56 FR 2671, Jan. 24, 1991]

§1700.24 Loans and grants pursuant to section 313 of the RE Act.

These zero-interest loans and grants are made to borrowers under the RE Act for the purpose of promoting rural economic development and rural job creation projects. Selection and approval of applications for zero-interest loans and grants rests solely within the discretion of the Administrator. (See 7 CFR part 1703.)

[57 FR 6290, Feb. 24, 1992]

§1700.25 Other loan authorities.

(a) The Administrator has authority under section 314 of the RE Act to guarantee 90 percent of the principal and interest of loans made by qualified private lenders to finance electric and telephone facilities in rural areas. (See 7 CFR parts 1712 and 1739.) The Administrator also has authority under section 502 of the RE Act to make grants and reduced interest loans to promote business incubator programs or for the creation or operation of business incubators in rural areas. Authority is also granted to the Administrator by the Rural Economic Development Act of 1990 (7 U.S.C. 950aaa *et seq.*) to provide financial assistance for distance learning and medical link programs.

(b) The Administrator has authority under section 5 of the RE Act to make loans to electric borrowers for the purpose of financing the wiring of the premises of persons in rural areas and for the purchase and installation of electrical and plumbing appliances and equipment, including machinery. The Administrator also has authority under the Consolidated Farm and Rural Development Act (7 U.S.C. 1921 *et seq.*) to finance community antenna television (CATV) services and facilities. Funds have not been appropriated for these purposes since 1969 in the case of section 5 loans and not since 1981 in the case of CATV loans.

[57 FR 6290, Feb. 24, 1992]

§1700.26 Studies, investigations, and reports.

Pursuant to section 2 of the RE Act, the Agency may make, or cause to be made, studies, investigations, and reports concerning the condition and progress of electrification and telephony in rural areas in the several States and territories and may publish and disseminate information with respect thereto.

§ 1700.27 Loan security activities.

In carrying out its program, and in the interest of loan security, the Agency requires periodic reports of borrowers on operations, annual audits, etc., and provides specialized and technical accounting, engineering, and other managerial assistance to borrowers with respect to the construction and operation of their facilities, to help them establish efficient and economical service in rural areas.

§ 1700.28 Issuances implementing procedure.

There are available from RUS, upon request:

(a) Basic forms of loan agreements; and

(b) Rules and bulletins issued from time to time which implement the loan agreements and the Agency's policies and procedures.

§ 1700.29 [Reserved]

Subpart C—Public Information

§ 1700.30 Availability of Agency publications and other information, and collection of public comments to proposed rules.

(a) 5 U.S.C. 552(a)(2) requires that certain materials be made available for public inspection and copying.

(b) The Rural Utilities Service (RUS) issues from time to time notices and regulations in the FEDERAL REGISTER as well as bulletins, informational publications, and staff instructions in order to:

(1) Implement the provisions of the RE Act and the loan and security instruments;

(2) Establish Agency procedures; and

(3) Assist electric and telephone borrowers in the design, operation, and maintenance of their systems.

(c) Information about availability and costs of Agency publications and other Agency materials is available from Publications and Directives Management Branch, Administrative Services Division, Rural Utilities Service, Room 0180, South Building, U.S. Department of Agriculture, Washington, DC 20250–1500.

(d) RUS will provide for the distribution of indexes of publications in conformance with the Freedom of Information Act, 5 U.S.C. 552(a)(2). Single copies of individual bulletins, informational publications, staff instructions, and forms, including forms of basic loan and security instruments, are available to borrowers and other members of the public either directly from RUS, from the Superintendent of Documents, U.S. Government Printing Office, Washington DC 20402, or from another source to be established by RUS. Costs for these publications are established in conformance with 7 CFR part 1. Initial copies of Bulletins directed to RUS borrowers are provided at no cost to those borrowers.

(e) RUS requires that all persons submitting comments to a proposed rule published by the Agency submit a signed original and three copies of their comments to the address shown in the preamble to the proposed rule. Copies of comments submitted are available to the public in conformance with 7 CFR part 1.

[56 FR 25349, June 4, 1991]

§ 1700.31 Indexes.

5 U.S.C. 552(a)(2) requires that each agency publish or otherwise make available a current index of all materials required to be made available for public inspection and copying. RUS will maintain and publish current indexes and quarterly supplements thereto, providing identifying information for all RUS Bulletins and for staff manuals and instructions made available pursuant to § 1700.30. Requests for copies should be addressed, in person or by mail, to the Office of the Director, Administrative Services Division, Room 0168—South Building, U.S. Department of Agriculture, Washington, DC 20250–1500.

§ 1700.32 Requests for records.

Requests for records under 5 U.S.C. 552(a)(3) shall be made in accordance with 7 CFR 1.6(a) and addressed to Office of the Director, Legislative and Public Affairs Staff, Rural Utilities Service, room 4043, South Building, U.S. Department of Agriculture, Washington, DC 20250–1500. A request shall describe the records sought as set forth in 7 CFR 1.6(b). A charge may be made

to cover the costs of fulfilling the request. Requests may be submitted in person or by mail.

[55 FR 53487, Dec. 31, 1990]

§1700.33 Appeals.

Any person whose request under §1700.32 is denied shall have the right to appeal such denial. This appeal shall be submitted in accordance with 7 CFR 1.3(e) and addressed to the Administrator, Rural Utilities Service, Room 4051, South Building, U.S. Department of Agriculture, Washington, DC 20250–1500.

Subpart D—Delegations of Authority; General

SOURCE: 59 FR 21624, Apr. 26, 1994, unless otherwise noted.

§1700.40 Exercise of delegated authority.

(a) Unless specifically reserved, or otherwise delegated, the delegations of authority contained in subparts D through L of this part include the authority to take any action or execute any document deemed necessary and proper to the discharge of such responsibilities. In the exercise of authority delegated in subparts D through L of this part, all applicable RUS policies, regulations, and procedures should be followed. All delegations previously made are superseded.

(b) No delegation of authority by the Administrator or other person shall preclude the Administrator or other person from exercising any of the authority so delegated.

§1700.41 Persons serving in acting capacities.

Incumbents delegated authority in subparts D through L of this part are authorized to designate a person to act for them as necessary, except that a Regional Director or the Director, Power Supply Division may not redelegate authority to approve loans, loan guarantees or lien accommodations, and related actions as set forth in §§1700.124(a), 1700.127(a) and 1700.145(a). If an incumbent of a position to whom delegations are made in subparts D through L of this part is absent or is unable to carry out such delegations, the person designated authority to act for the incumbent shall exercise the authority conferred by such delegations. Such designations shall be in accordance with any instruction issued by the incumbent's supervisor.

[59 FR 21624, Apr. 26, 1994, as amended at 59 FR 46723, Sept. 12, 1994]

§1700.42 Persons serving as acting Administrator.

The following persons are authorized, in descending order, to act for the Administrator only in his or her absence, sickness, resignation, or death: Deputy Administrator, Assistant Administrator—Electric, Assistant Administrator—Telephone, Assistant Administrator—Economic Development and Technical Services. That is, if the first person on the list is also absent, sick, has resigned, or is dead, the second person on the list is authorized to act for the Administrator and so on down the list. Persons on this list may not redelegate the authority to act for the Administrator. The Administrator may in his/her discretion in writing, on a case-by-case basis, delegate authority to act as Administrator in his/her absence outside of this specified order.

§1700.43 Persons serving as acting Assistant Administrator.

(a) *Electric and telephone programs.* The Deputy Assistant Administrator in each program is authorized to act for the respective Assistant Administrator in the absence, sickness, resignation or death of that Assistant Administrator. The Deputy Assistant Administrators may not redelegate this authority.

(b) *Assistant Administrator—Economic Development and Technical Services.* (1) The Directors of the Rural Development Assistance Staff, Borrower Accounting Division and the Program Support Staff are authorized to act for the Assistant Administrator—Economic Development and Technical Services in his or her absence according to the following schedule:

Director of	Months
Rural Development Assistance Staff.	January, April, July, October.
Borrowers Accounting Division.	February, May, August, November.

Director of	Months
Program Support Staff	March, June, September, December.

(2) If a particular Director is absent, sick, has resigned or is dead during a scheduled month, the delegation will revolve back to the preceding month. These Directors may not redelegate this authority.

§ 1700.44 Contracts approved on behalf of the Administrator.

(a) *Nonstandard contracts.* Prior to the approval or the execution of the following documents, the Office of the General Counsel (OGC) shall comment as to any legal matters concerning such nonstandard contracts:

(1) Contracts for engineering services, architectural services, construction, and power supply that include a substantive deviation from the standard form contract approved by OGC; and

(2) Other documents involving legal matters of concern to the approving official.

(b) *Signature.* All contract approvals shall be signed:

(Name and Title)
For the Administrator

§§ 1700.45—1700.59 [Reserved]

Subpart E—Delegations of Authority; Agency Issuances and Certain Correspondence

SOURCE: 59 FR 21625, Apr. 26, 1994, unless otherwise noted.

§ 1700.60 Agency issuances.

Except as may be specifically delegated from time to time to the Deputy Administrator, or others, all authority is reserved by the Administrator to approve and issue regulations and other information published in the FEDERAL REGISTER, bulletins, informational publications, staff instructions concerning Agency administrative matters and those affecting more than one program, and unnumbered memoranda (mailings to borrowers in more than one program and all RUS staff). Signature authority is also reserved by the Administrator for written responses to Members of Congress, Governors, State Legislators, Federal Agency heads or Cabinet officials, as well as other controlled correspondence for Agency response. Additionally, signature authority is reserved by the Administrator for Agency mass mailings which include but are not limited to mailings to accountants, engineers, and consultants.

§ 1700.61 Agency publications control officer.

The Deputy Administrator is designated the Agency Publications Control Officer.

§§ 1700.62—1700.69 [Reserved]

Subpart F—Delegations; Authorities Reserved by the Administrator

SOURCE: 59 FR 21624, Apr. 26, 1994, unless otherwise noted.

§ 1700.70 General.

Authority for all matters not specifically delegated in subparts D through L of this part, or by other written delegation, is reserved to the Administrator, including, without limitation, the following authorities reserved in this subpart.

§ 1700.71 Rural economic development loan and grant and distance learning and medical link grant programs.

Approval of the following:

(a) Applications for loans or grants when all conditions for such approval have been met.

(b) All zero-interest loans and grants.

(c) Any modifications in the method of carrying out loan purposes, or in the amount of applications selected and loans or grants approved.

(d) Extension of principal and interest repayments for rural development purposes.

§ 1700.72 Electric program.

(a) Approval of the following loans, loan guarantees, lien accommodations or subordinations:

(1) All discretionary hardship loans.

(2) All insured loans, loan guarantees, and lien accommodations or subordinations to finance operating costs.

(3) All loans, loan guarantees, and lien accommodations or subordinations of more than $15,000,000 for distribution and power supply borrowers.

(4) All loans, loan guarantees, and lien accommodations or subordinations for distribution borrowers that are members of a power supply borrower that is in default of its obligations to the Government or that is currently assigned to the Financial Services Staff, unless otherwise determined by the Administrator.

(5) All insured loans, loan guarantees, and lien accommodations or subordinations that require an Environmental Impact Statement.

(6) All certifications and findings required by the RE Act or other applicable laws and regulations, the placing and releasing of conditions precedent to the advance of funds, and all mortgages, loan contracts or other necessary documents relating to the authorities reserved in paragraph (a) of this section.

(b) And execution of all loan contracts, mortgages or other documents in connection with loans, loan guarantees and lien accommodations approved by the Administrator.

(c) Approval of the following for unpaid and outstanding loans and loan guarantees:

(1) Rescission of loans or termination of loan guarantee commitments when the amount of the rescission or termination is more than $15,000,000.

(2) Requests to extend the time period for advancing loan funds if:

(i) The borrower is delinquent in payments on loans made or guaranteed by RUS or in litigation that may affect loan security; or

(ii) The request does not fully comply with the requirements specified in applicable RUS regulations.

(3) Extension of time of prepayment principal and interest pursuant to Section 12 of the RE Act, for borrowers in default or currently assigned to the Financial Services Staff.

(4) Agreements, plans, arrangements, recommendations to settle debt, or other actions affecting a borrower's financial or other obligations to the Government through the Administrator of RUS for loans, loan guarantees, or other financial obligations except as may be specifically delegated to the Financial Services Staff.

(5) Loan budget adjustments (transfers or reclassifications) when approval is for:

(i) Changes in generation facilities that are subject to a power survey or certification by RUS;

(ii) Any proposed change of more than $15,000,000;

(iii) Any proposed operating costs.

(d) Approval of the following for borrower facilities, organization, operations, or corporate status:

(1) Agreements for the merger or consolidation of borrowers.

(2) Power surveys or certifications by RUS involving changes in generation facilities.

(3) Contracts for the acquisition of plant-in-place of more than $15,000,000 and related financial transactions.

(4) Approval, in amounts of $25,000,000 or more, of:

(i) The use of general funds; or

(ii) Sales or transfers of property and related releases of lien.

(5) Equity development plans and amendments to equity development plans submitted by borrowers:

(i) As part of an application for any loan and loan guarantee that requires approval of the Administrator;

(ii) By any borrower whose equity as a percentage of total assets, is less than 10 percent at the time the plan is submitted, or whose equity is predicted to drop below 10 percent during the 10-year period of the plan.

(6) Assumptions of debt.

§ 1700.73 Telephone program.

(a) Approval of the following loans, loan guarantees, lien accommodations or subordinations:

(1) All loans, loan guarantees, and lien accommodations or subordinations to finance operating costs.

(2) All loans, loan guarantees, or lien accommodations or subordinations for more than $15,000,000.

(3) Loans and loan guarantees with acquisition costs for more than $5,000,000.

(4) Loans and loan guarantees containing funds to refinance outstanding debt amounts for more than $5,000,000.

(b) All loan contracts, mortgages and other documents to be executed in connection with loans and loan guarantees approved by the Administrator.

(c) Approval of the following for unpaid and outstanding loans and loan guarantees:

(1) Extension of time for payment of principal and interest pursuant to Section 12 of the RE Act, for borrowers in default.

(2) Agreements, plans, arrangements, recommendations to settle debt, or other actions affecting a borrower's financial or other obligations to the Government acting through the Administrator of RUS for loans, loan guarantees or other financial obligations.

(3) Sales and transfers of property for more than $5,000,000 and related releases of lien.

[59 FR 21624, Apr. 26, 1994, as amended at 59 FR 46724, Sept. 12, 1994]

§§ 1700.74—1700.89 [Reserved]

Subpart G—Delegations of Authority; Loan Review Committees

SOURCE: 59 FR 21624, Apr. 26, 1994, unless otherwise noted.

§ 1700.90 General.

To assist in carrying out the authorities which are reserved or delegated in subparts D through L of this part, the roles of the following committees in this subpart are recognized.

§ 1700.91 Senior loan review committee.

The Senior Loan Review Committee, appointed by the Administrator, shall review and make recommendations to the Administrator on all electric and telephone loans, loan guarantees, and lien accommodations or subordinations whose approval has been reserved by the Administrator. The committee shall be chaired by the Administrator and include the Assistant Administrator—Electric (AAE), Assistant Administrator—Telephone (AAT), and such other members as the Administrator may appoint.

§ 1700.92 Assistant Administrator's loan committee.

Both the electric and telephone programs shall have Assistant Administrator's Loan Committees (AALC), consisting of the Regional Directors or Acting Regional Directors of the respective programs as well as additional members appointed by the appropriate Assistant Administrator. The AALC shall be chaired by either the appropriate Assistant Administrator or Deputy Assistant Administrator. The AALC shall meet as required to review, analyze, and concur in recommendations for actions to be taken for all loan application requests, loan guarantee applications, and lien accommodations or subordinations. The recommending official may not vote.

(a) Assistant Administrators and Regional Directors may approve loans, loan guarantees, or lien accommodations or subordinations under § 1700.124 or § 1700.146 only after the AALC has concurred with such actions.

(b) An Assistant Administrator may, in their sole discretion, forward a recommendation for a loan, loan guarantee or other financing action to the Senior Loan Committee for its consideration.

§ 1700.93 Rural economic development recommendation committee.

The Administrator may appoint a recommendation committee for the purpose of reviewing loan and grant recommendations.

§§ 1700.94—1700.99 [Reserved]

Subpart H—Delegations of Authority; Rural Economic Development, Program Support, and Borrower Accounting Activities

SOURCE: 59 FR 21624, Apr. 26, 1994, unless otherwise noted.

§ 1700.100 General.

The following delegations of authority in this subpart are made by the Administrator.

§1700.101 Deputy Administrator.

The Deputy Administrator in conformance with applicable regulations and RUS policy is hereby delegated authority to exercise all authorities conferred upon other persons in §1700.102.

§1700.102 Assistant Administrator—Economic Development and Technical Services.

The Assistant Administrator—Economic Development and Technical Services in conformance with applicable regulations and RUS policy is delegated authority to exercise all authorities conferred upon others in §§1700.103 through 1700.109, approval of staff instructions affecting only the Rural Development Program, and unnumbered memoranda (mailings to two or more borrowers) sent to rural development borrowers or grant recipients.

§1700.103 Director—Rural Development Assistance Staff.

The Director—Rural Development Assistance Staff in conformance with applicable regulations and RUS policy is delegated authority to approve for the Rural Economic Development Loan and Grant Programs and Distance Learning and Medical Link Grant Programs the following:

(a) Releases of loan and grant funds including the approval of all agreements and documents between the RUS borrower and the ultimate recipient.

(b) Cancellation of applications that have not been selected for approval by the Administrator.

(c) Rescission of loan and grant funds.

(d) Extension of the time period for the RUS borrower to meet the prerequisites to the advance of funds and the period to disburse the funds.

(e) In addition, all authorities conferred upon other persons in §1700.104

§1700.104 Chief, Financing Branch—Rural Development Assistance Staff.

The Chief, Rural Development Assistance Staff—Financing Branch in conformance with applicable regulations and RUS policy is delegated authority to approve and execute for the Rural Economic Development Loan and Grant and Distance Learning and Medical Link Grant Programs the following:

(a) Reports of vouchers released; and

(b) Notice to Financial Operations Division (FOD) authorizing the advance or release of funds.

§1700.105 Director, Borrower Accounting Division.

The Director, Borrower Accounting Division in conformance with applicable regulations and RUS policy is delegated authority to:

(a) Approve a certified public accountant (CPA) for borrower audits of its financial statements.

(b) Take actions concerning the selection or change of a borrower's CPA (7 CFR 1773.4).

(c) Serve as the RUS liaison within the Office of Inspector General (OIG) for all borrower irregularities.

(d) In addition, execute all authorities conferred upon other persons in §§1700.106 through 1700.108.

§1700.106 Chief, Technical Accounting and Auditing Staff.

The Chief, Technical Accounting and Auditing Staff in conformance with Federal regulations and RUS policy is delegated authority to approve or execute:

(a) Actions concerning accounting policies, procedures, standards, interpretations of Financial Accounting Standards Board (FASB) issuances or other technical accounting issues; and

(b) Actions concerning the application of generally accepted auditing standards to borrowers' accounts.

§1700.107 Chiefs, Area Accounting Branches.

The Chiefs, Area Accounting Branches in conformance with Federal regulations and RUS policy are delegated authority to approve or execute:

(a) Statement of condition of borrower's records; and

(b) In addition, all authorities conferred upon other persons in §1700.108.

§1700.108 Field Accountants.

The Field Accountants in conformance with applicable regulations and RUS policy are delegated authority to approve or execute:

(a) Propriety of the disbursements of loan and equity funds as required by loan contract provisions and RUS policy.

(b) Adequacy of borrowers' accounting systems and related records.

§ 1700.109 Director—Program Support Staff.

The Director—Program Support Staff in conformance with applicable regulations and RUS policy is delegated authority to encumber loan funds for RUS and RTB loans.

§§ 1700.110—1700.119 [Reserved]

Subpart I—Delegations of Authority; Electric Program

SOURCE: 59 FR 21624, Apr. 26, 1994, unless otherwise noted.

§ 1700.120 General.

The following delegations of authority are made by the Administrator to the electric program.

§ 1700.121 Deputy Administrator.

The Deputy Administrator in conformance with applicable regulations and RUS policy is delegated authority to approve or execute for the electric program:

(a) Agreements or contracts for management or operations services between telephone and electric borrowers.

(b) FEDERAL REGISTER notices announcing the availability of final Environmental Impact Statements and the approval of RUS's final Environmental Impact Statements as well as Findings of No Significant Impact (FONSI).

(c) In addition, all authorities conferred upon other persons in § 1700.122.

§ 1700.122 Assistant Administrator—Electric.

The Assistant Administrator—Electric in conformance with applicable regulations and RUS policy is delegated authority to approve or execute for the electric program:

(a) Approval of the following loans and necessary documents, except for those approvals reserved for the Administrator in § 1700.72(a):

(1) Approval of loans of $15,000,000 or less for entities not previously financed by RUS.

(2) Loans, loan guarantees, and lien accommodations or subordinations for distribution and power supply borrowers in amounts from $10,000,000 to $15,000,000.

(b) The following actions for unpaid and outstanding loans:

(1) Rescission of loans or termination of loan guarantee commitments when the amount of the rescission or termination is $15,000,000 or less.

(2) Requests to extend the period for advancing loan funds in any amount except for:

(i) Requests from borrowers that are delinquent in their loan payments to RUS or in payments guaranteed by RUS or in litigation that may affect loan security.

(ii) Requests that do not comply with the requirements specified in applicable RUS regulations.

(iii) Cases where the Administrator has further reserved this authority.

(3) Extension of time for payment of principal and interest pursuant to section 12 of the RE Act for other than Energy Conservation Resources Loans, except for requests from borrowers in default or currently assigned to FSS.

(4) Loan budget adjustments (transfers or reclassifications) except when such adjustments would provide funds for:

(i) Changes in generation facilities that are subject to a power survey certification.

(ii) Any proposed change for more than $15,000,000.

(iii) Any proposed operating costs.

(5) Imposition of and release of special controls on loan fund advances when the borrower is delinquent in payments on RUS loans or guarantees by RUS or the borrower is in litigation that may affect loan security.

(6) Questions arising from the interpretations or clarifications of the application of 7 CFR 1721.1 to individual borrower circumstances.

(c) The following changes in borrowers' facilities, organization or corporate status:

(1) Changes in transmission facilities not identified to RUS at the time of loan approval that are subject to a

power survey or certification by RUS involving the use of construction or general funds of $15,000,000 or less.

(2) Power survey or certification by RUS involving changes in transmission facilities.

(3) Contracts for the acquisition of plant-in-place of $15,000,000 or less and related financial transactions.

(4) Determination of the proper categorization of electric project proposals for the purpose of environmental review.

(5) Execution of documents relating to inter-borrower assumption of indebtedness.

(6) Approval in amounts of less than $25,000,000 of:

(i) The use of general funds; or

(ii) Sales or transfers of property and related releases of lien.

(7) Approval or disapproval of the selection of a manager or attorney by an electric borrower.

(d) Memoranda to electric staff or to two or more electric borrowers.

(e) Approval of staff instructions affecting only the Electric Program.

(f) Waivers of borrower requirements pursuant to 7 CFR part 1710, Subpart E—Power Requirements Studies.

(g) All authorities conferred upon other persons in §1700.123.

§1700.123 Deputy Assistant Administrator—Electric.

The Deputy Assistant Administrator—Electric in conformance with applicable regulations and RUS policy is delegated authority to approve or execute for the electric program:

(a) Any contracts for the acquisition of plant-in-place for $10,000,000 or less and related financial transactions.

(b) The following matters concerning borrowers' facilities, organization or corporate structure:

(1) Changes in borrowers' corporate status.

(2) Power supply contracts and agreements including wholesale power, fuel, interconnections and wheeling agreements, participation agreements, lease agreements for facilities or properties, power sales agreements with non-RE Act beneficiaries, and integrated transmission agreements between RUS borrowers and non-borrowers, any of which require a construction expenditure of more than $10,000,000.

(c) Approvals required under the mortgage to retire capital credits or make other cash distributions in the following cases:

(1) Any distribution borrower that does not meet the following conditions:

(i) The retirement will not reduce total equity to less than 25 percent of total assets and other debits;

(ii) The oldest capital credits outstanding before the retirement are at least 10 years old where the retirement method is first-in, first-out, or the retirement is not more than 7 percent of all outstanding capital credits before the retirement where another method of retirement, authorized by the bylaws, is used; and

(iii) TIER and DSC ratios exceed mortgage minimum, i.e., the average of the highest two of the last 3 years exceeds 1.5 for TIER and 1.25 for DSC.

(2) Any power supply borrower.

(d) All authorities conferred upon other persons in §§1700.124 and 1700.131.

§1700.124 Regional Directors.

Regional Directors in conformance with applicable regulations and RUS policy are delegated authority to approve or execute for the electric program's distribution borrowers:

(a) The following loans, loan guarantees, lien accommodations, and documents:

(1) Insured loans, loan guarantees, and lien accommodations or subordinations in amounts of less than $10,000,000, except for those approvals reserved for the Administrator in §1700.72(a), or those reserved for the Assistant Administrator—Electric under §1700.122(a).

(2) All certifications and findings required by the RE Act or other applicable laws and regulations, the imposing and releasing of conditions precedent to the advance of loan funds, and all mortgages, loan contracts or other documents relating to the delegations set forth in paragraph (a)(1) of this section.

(b) The following matters for unpaid and outstanding loans:

(1) Rescission of loans or termination of loan guarantee commitments when

the amount of the rescission or termination is $10,000,000 or less, except for discretionary or operating loans.

(2) Requests to extend the period for advancing loan funds when the amount of unadvanced loan funds is $10,000,000 or less, except for:

(i) Requests from borrowers that are delinquent in their loan payments to RUS or in loans guaranteed by RUS or in litigation that may affect loan security.

(ii) Requests that do not fully comply with the requirements specified in RUS regulations.

(iii) Cases where the Administrator has further reserved this authority.

(3) Basis date agreements for all approved requests to extend the period for advancing loan funds.

(4) Principal deferments under Section 12 of the RE Act for Energy Resource Conservation Loans and Rural Economic Development Investments.

(5) Loan budget adjustments (reclassifications or transfers) except when such adjustments would provide funds for:

(i) Changes in generation and transmission facilities that are subject to a power survey or certification by RUS.

(ii) Any change exceeding $10,000,000.

(iii) Any operating costs.

(6) Advance of loan funds under ''stop orders'' and ''special conditional agreements'' when the conditions have been met, except when the borrower is delinquent in its loan payments to RUS, or its loans guaranteed by RUS, or when the borrower is in litigation which may affect loan security or the Office of the Administrator has reserved this authority.

(7) Imposition of special controls on the further advance of loan funds when it has been determined that loan feasibility may be jeopardized.

(8) Complete releases of lien and satisfaction in cases where a borrower has repaid its indebtedness in full.

(9) Approval of prepayments in accordance with 7 CFR part 1786 and all related documents.

(10) Cancellation or endorsement due to payment on borrowers' notes which have been paid in full in connection with a prepayment made under the provisions of 7 CFR part 1786, subpart F.

(c) Matters concerning borrower facilities, organization, or corporate status:

(1) Agreements between electric borrowers for the operation of facilities.

(2) Management and operating agreements between electric borrowers and subsidiary organizations engaged in rural development activities.

(3) Sales and leases of borrowers' capital assets involving transactions in amounts of $5,000,000 or less and the related releases of lien.

(4) Use of general funds by a borrower for plant additions in the amount of $5,000,000 or less, except for facilities subject to power supply surveys or certification by RUS.

(5) Annual review of loan security of borrowers.

(6) Action concerning certain retirements of patronage capital and other cash distributions which meet the following conditions:

(i) The retirement will not reduce total equity to less than 25 percent of total assets and other debits;

(ii) The oldest capital credits outstanding before the retirement are at least 10 years old where the retirement method is first-in, first-out, or the retirement is not more than 7 percent of all outstanding capital credits before the retirement where another method of retirement, authorized by the bylaws, is used; and

(iii) TIER and DSC ratios exceed mortgage minimum, i.e., the average of the highest two of the last 3 years exceeds 1.5 for TIER and 1.25 for DSC.

(7) Approval as a majority note holder of employment contracts between a borrower and its general manager.

(8) Waiver of specified defects in title to property obtained by borrowers.

(9) All equity development plans and amendments to equity development plans except those requiring approval of the Administrator.

(10) Any contracts for the acquisition of plant-in-place of $5,000,000 or less and related financial transactions.

(d) Letters certifying borrowing eligibility for non-borrower electric cooperatives seeking financing from the Bank for Cooperatives.

(e) In addition, all authorities conferred upon other persons in §§1700.125, 1700.126 and 1700.130.

[59 FR 21624, Apr. 26, 1994, as amended at 59 FR 46724, Sept. 12, 1994]

§1700.125 Chiefs, Regional Engineering Branches.

The Chiefs, Regional Engineering Branches in conformance with applicable regulations and RUS policy are delegated authority to approve or execute for the electric program with respect to distribution and transmission facilities for distribution borrowers:

(a) The following matters concerning unpaid and outstanding loans and loan guarantees:

(1) Financial requirements and expenditure statements when all conditions precedent to the advance of loan funds have been met, no litigation is pending pertaining to the loan or loan guarantee, the borrower is not delinquent in its loan payments to RUS or in loans guaranteed by RUS, and the Office of the Administrator has not reserved this authority.

(2) Report of vouchers released.

(3) Concurrent loan fund requisitions.

(b) The following matters concerning technical specifications, and borrower facilities and organization, except for matters concerning generation facilities:

(1) Selection by a borrower of an architect; plans and specifications, work orders, and contracts for architectural services for the construction of headquarters, garage, and warehouse facilities requiring RUS approval, and final inventory documents and payments to contractors and architects.

(2) Selection by a borrower of an engineer and contracts for engineering services in cases requiring RUS approval.

(3) Contracts for construction and right-of-way clearing and for the purchase of substation sites and Headquarters facility sites with clear title and special types of equipment requiring RUS approval.

(4) Final inventory documents and payments to contractors and engineers.

(5) Use of nonstandard drawings, materials, and equipment.

(6) Technical engineering studies for transmission, load management, microwave, Supervisory Control and Data Acquisition (SCADA) and other facilities requiring RUS approval.

(7) Borrowers' selection of a method of construction.

(8) Plans and specifications for construction, preliminary design data and plans, and profile sheets.

(9) Negotiation in lieu of competitive bidding of borrowers' contracts.

(10) Award of contracts for construction of purchase of material and equipment with fewer than three bids.

(11) Long-range engineering plans.

(12) Borrowers' environmental reports.

(13) Amendments to all types of power supply contracts or agreements including extensions of time to existing contracts and superseding contracts with no significant changes; the addition of new delivery points; and modification of existing delivery points between distribution borrowers and non-RUS borrower power suppliers, except where facilities are subject to a power survey or certification by RUS.

(14) Final statements of engineering fees requiring RUS approval, except for generation facilities.

(c) In addition, all other authorities of an engineering nature pertaining to distribution and transmission conferred upon other persons in §1700.130.

§1700.126 Chiefs, Area Operations Branches.

The Chiefs, Area Operations Branches in conformance with applicable regulations and RUS policy are delegated authority to approve or execute for the electric program's distribution borrowers:

(a) The following matters with unpaid and outstanding distribution loans.

(1) Affidavits, certificates, filings, and confirmation statements with respect to the recording, filing or renewing of security instruments, including financing statements under the Uniform Commercial Code of the applicable state.

(2) Municipal and county franchises, licenses, ordinances, and permits to construct or operate facilities obtained by borrowers as required by its security instruments.

(3) Notice of clearance of RUS loan documents.

(b) Matters concerning borrower facilities, organization, or corporate status:

(1) Sales and leases of borrower's capital assets involving transactions in amounts of $500,000 or less, except for facilities subject to power supply surveys or certification by RUS.

(2) Partial releases of lien, associated with sales of a borrower's capital assets, involving transactions in amounts of $500,000 or less.

(3) Approval of large retail power contracts which have not been delegated to the General Field Representatives—Electric.

§ 1700.127 Director—Power Supply Division.

The Director—Power Supply Division in conformance with applicable Regulations and RUS policy is delegated authority to approve or execute for the electric program's power supply borrowers:

(a) Approval of the following loans, loan guarantees, and loan documents:

(1) Approval of insured loans, loan guarantees, and lien accommodations or subordinations in amounts of less than $10,000,000 for power supply borrowers, except for those approvals reserved for the Administrator in § 1700.72(a).

(2) All certifications and findings required by the RE Act or other applicable laws and regulations, the placing and releasing of conditions precedent to the advance of funds, and all mortgages, loan contracts or other documents relating to the delegations set forth in paragraph (a)(1) of this section.

(b) The following matters for unpaid and outstanding loans:

(1) Rescission of loans or termination of loan guarantee commitments when the amount of the rescission or termination is $10,000,000 or less, except for discretionary or operating loans.

(2) Requests to extend the period for advancing loan funds when the amount of unadvanced loan funds is $10,000,000 or less, except for:

(i) Requests from borrowers that are delinquent in their loan payments to RUS, loans guaranteed by RUS or in litigation that may affect loan security.

(ii) Requests that do not fully comply with the requirements specified in RUS regulations.

(iii) Cases where the Administrator has further reserved this authority.

(3) Execution of basis date agreements for all approved requests to extend the period for advancing loan funds.

(4) Loan budget adjustments (reclassifications or transfers) except when such adjustments would provide funds for:

(i) Changes in generation and transmission facilities that are subject to a power survey or certification by RUS.

(ii) Any proposed change for more than $10,000,000.

(iii) Any proposed operating costs.

(5) Advance of loan funds under ''stop orders'' and ''special conditional agreements'' when the conditions have been met, except when the borrower is delinquent in its loan payments to RUS, loan guaranteed by RUS or when the borrower is in litigation which may affect loan security or the Administrator has reserved this authority.

(6) Imposition of special controls on the advance of loan funds when it has been determined that loan feasibility may be jeopardized.

(7) Approval of prepayments in accordance with 7 CFR part 1786 and all related documents.

(8) Complete releases of lien when a borrower has paid in full its indebtedness.

(9) Approval of mortgages for refinancing transactions, regardless of amount.

(10) Cancellation or endorsement due to payment on borrower's notes which have been paid in full in connection with a prepayment made under the provisions of 7 CFR part 1786, subpart F.

(c) Matters concerning borrower facilities, organization, or corporate status:

(1) Agreements between electric borrowers for operation of facilities.

(2) Management and operating agreements between electric borrowers and subsidiary organizations engaged in rural development activities.

(3) Sales and leases of borrowers' capital assets involving transactions in

amounts of $10,000,000 or less and the related releases of lien.

(4) Use of general funds by a borrower for plant additions in the amount of $10,000,000 or less, except for facilities subject to power supply surveys or certification by RUS.

(5) Annual review of loan security of power supply borrowers.

(6) Approval as a majority noteholder of employment contracts between a borrower and its general manager.

(7) Wholesale power electric rates in connection with power supply contracts.

(8) Waiver of specified defects in title to property obtained by power supply borrowers.

(9) Interconnection Agreements, Wheeling Agreements, non firm Power Sales or Purchase Agreements requiring a construction expenditure of $10,000,000 or less.

(10) Firm Power Sale or Purchase Agreements with a duration of 3 years or less, which require a construction expenditure of $10,000,000 or less.

(11) Participation agreements with other utilities on jointly owned facilities for new transmission, subtransmission or distribution facilities requiring an expenditure of $10,000,000 or less.

(12) Participation agreements with other utilities on jointly owned ucilities for generation modifications to existing plant requiring an expenditure of $10,000,000 or less.

(13) Any contracts for the acquisition of plant-in-place of $5,000,000 or less and related financial transactions.

(d) In addition, all authorities conferred upon other persons in §§1700.128 and 1700.129.

[59 FR 21624, Apr. 26, 1994, as amended at 59 FR 46724, Sept. 12, 1994]

§1700.128 Chief, Operations Branch, Power Supply Division.

The Chief, Operations Branch, Power Supply Division in conformance with applicable Regulations and RUS policy is delegated authority to approve or execute for the electric program:

(a) The following matters dealing with outstanding power supply loans.

(1) Affidavits, certificates, filings, and continuation statements with respect to the recording, filing or renewing of mortgages and deeds of trust, including financing statements under the Uniform Commercial Code of the applicable state.

(2) Municipal and county franchises, licenses, ordinances, and permits to construct or operate facilities obtained by borrowers as required by the mortgage.

(3) Notice of Clearance of RUS loan documents.

(4) Approval of large retail power contracts.

(5) Sales, transfers, and partial releases of liens involving sales of borrowers' capital assets with a value of $500,000 or less.

(b) The following matters concerning unpaid and outstanding loans:

(1) Financial requirements and expenditure statements when all conditions precedent to the advance of loan funds have been met, no litigation is pending pertaining to the loan, the borrower is not delinquent in its loan payments to RUS, loans guaranteed by RUS and the Administrator has not reserved this authority.

(2) Report of vouchers released.

(3) Concurrent loan fund requisitions.

§1700.129 Chiefs, Power Engineering Branches, Power Supply Division.

The Chiefs, Power Engineering Branches, Power Supply Division in conformance with applicable Regulations and RUS policy are delegated authority to approve or execute for the electric program for electric power supply borrowers:

(a) The following matters concerning technical specifications, and borrower facilities and organizational issues for power supply borrowers:

(1) Selection by a borrower of an engineer or architect; plans and specifications, work orders, preliminary design data, plans and profile sheets, and contracts for architectural and all engineering services for facilities requiring RUS approval, and final inventory documents and payments to contractors and architects.

(2) Borrowers' selection of method of construction.

(3) Final statements of engineering fees.

(4) Purchase of generating plant sites.

(5) Technical engineering studies for generation facilities.

(6) Contracts for the construction and purchase of materials and equipment for generation and transmission facilities.

(7) Use of nonstandard specifications, drawings, materials and equipment.

(8) Negotiation in lieu of competitive bidding of borrowers' contracts.

(9) Award of contracts for construction or purchase of materials and equipment with fewer than three bids.

(10) Amendments to power supply contracts or agreements including extensions of time to existing contracts; the addition of new delivery points; and modification of existing delivery points, except where facilities are subject to a power survey or certification by RUS.

(11) Contracts for construction and right-of-way clearing and for the purchase of substation sites with clear title and special types of equipment requiring RUS approval.

(12) Long-range engineering plans.

(13) Borrower environmental reports.

(14) Interchange agreements and similar agreements where no construction is required.

(15) Interconnection agreements where no construction is required.

(16) Construction Work Plan (CWP) approval for G&T borrowers

(b) The following matters pertaining to the generation facilities of distribution borrowers:

(1) Selection by a borrower of an engineer or architect; plans and specifications, work orders, preliminary design data, plans, and contracts for architectural and all engineering services for facilities requiring RUS approval, and final inventory documents and payments to contractors and architects.

(2) Borrowers' selection of method of construction.

(3) Final statements of engineering fees.

(4) Purchase of generating plant sites.

(5) Technical engineering studies for generation facilities.

(6) Contracts for the construction and purchase of materials and equipment for generation facilities.

(7) Use of nonstandard specifications, drawings, materials and equipment.

(8) Negotiation in lieu of competitive bidding of borrowers' contracts.

(9) Award of contracts for construction or purchase of materials and equipment with fewer than three bids.

(10) The borrower's generation portion of the CWP.

§ 1700.130 General Field Representatives—Electric.

The General Field Representatives—Electric in conformance with applicable regulations and RUS policy are delegated authority to approve or execute for the electric program:

(a) Cost estimates and facilities for distribution borrowers' large power applications.

(b) Use of armless or narrow profile construction for distribution in scenic areas or where right-of-way is restricted.

(c) Certificates of completion for distribution and transmission contract construction.

(d) Power requirements and irrigation studies for distribution borrowers:

(1) Without generation facilities;

(2) With an ownership or lease interest in RUS financed generation facilities of less than 40 MW nameplate rating as set forth in ''RUS Financed Generating Plants,'' Information Publication (IP) 200–2, or its equivalent. This publication is available from Publications and Directives Management Branch, Administrative Services Division, Rural Utilities Service, room 0180, South Building, U.S. Department of Agriculture, Washington, DC 20250–1500;

(3) With an ownership or lease interest in RUS financed generation facilities of 40 MW or more, provided the borrower has not received RUS financial assistance for generation capacity of 40 MW or more within 15 years of the borrower's request for RUS approval of its Power Requirements Study; or

(4) That are members of a power supply borrower when the member study is not prepared as part of the power supply borrower's Power Requirements Study.

(e) Amendments to or revisions of previously approved power requirements or irrigation studies for distribution borrowers which are members of a power supply borrower when the amendment or revision is for support of

a new loan application to be submitted by the member prior to RUS's approval of a new power-supply Power Requirements Study.

(f) Distribution facilities in construction work plans including amendments and voltage drop, sectionalizing and power factor studies solely for distribution borrowers.

(g) Long-range financial forecasts prepared for distribution borrowers.

(h) Approval, for distribution borrowers, of large retail power contracts for which the borrower's investment in plant facilities does not exceed 10 percent of total utility plant except for distribution borrowers which are members of an RUS financed power supply borrower which is in default under its loan repayments or whose debt has been restructured.

§1700.131 Director, Electric Staff Division.

The Director, Electric Staff Division in conformance with applicable regulations and RUS policy is delegated authority to approve the following:

(a) Power Requirements Studies for:

(1) All power supply borrowers.

(2) All members of a power supply borrower when the members' studies were prepared as part of the power supply borrower's Power Requirements Study.

(3) Distribution borrowers with an ownership or lease interest in generating facilities of 40 MW or more nameplate rating as set forth in RUS Financed Generating Plants (IP 200–2), or its equivalent, provided the borrower has received RUS financial assistance for generating capacity of 40 MW or more within 15 years of the borrower's request for RUS approval of its Power Requirements Study.

(b) Approval of Integrated Resource Plans for power supply and distribution systems and Demand Side Management plans for distribution systems.

§1700.132 Technical Standards Committees "A" and "B"—Electric.

The Technical Standards Committees ''A'' and ''B''—Electric in conformance with applicable regulations and RUS policy are delegated authority to approve for the electric program:

(a) Technical Standards Committee ''A''—Electric accepts or rejects all proposals of standard specifications, drawings, material and equipment submitted for acceptance for use in RUS financed electric systems.

(b) Technical Standards Committee ''B''—Electric reviews and makes a final decision on cases referred to it by either Committee A or by appeal from a sponsor from an adverse decision made by Committee A.

§§1700.133—1700.139 [Reserved]

Subpart J—Delegations of Authority; Telephone Program

SOURCE: 59 FR 21624, Apr. 26, 1994, unless otherwise noted.

§1700.140 General.

The delegations in this subpart relating to the RUS telephone program also apply to the Rural Telephone Bank (RTB).

§1700.141 General delegations.

The following delegations of authority for the telephone program in this subpart are made by the Administrator.

§1700.142 Deputy Administrator.

The Deputy Administrator in conformance with applicable regulations and RUS policy is delegated authority to approve or execute for the telephone program:

(a) Agreements or contracts covering management or operations services between telephone and electric borrowers.

(b) FEDERAL REGISTER notices announcing the availability of final Environmental Impact Statements and the approval of RUS's final Environmental Impact Statements as well as Findings of No Significant Impact (FONSI).

(c) In addition, all authorities conferred upon other persons in§1700.143.

§1700.143 Assistant Administrator—Telephone.

The Assistant Administrator—Telephone in conformance with applicable regulations and RUS policy is delegated authority to approve or execute for the telephone program:

(a) Loans, loan guarantees and lien accommodations or subordinations of between $7,500,000 and $15,000,000 except for those reserved for the Administrator in § 1700.73(a).

(b) Loans and loan guarantees with acquisition costs between $2,000,000 and $5,000,000.

(c) Loans and loan guarantees with refinancing amounts between $2,000,000 and $5,000,000.

(d) Approval of the following matters concerning unpaid and outstanding loans:

(1) Basis date agreements or agreements for extension of advances and related recommendations;

(2) Budget adjustments for loans made by the Administrator and loan budget adjustments amounting to more than $2,000,000.

(e) Approval of the following concerning borrower facilities, organization or corporate status:

(1) Field trial installations of telephone materials and equipment involving more than $250,000;

(2) Approval of the purchase price of properties to be acquired by telephone borrowers when the purchase price exceeds RUS approved appraisal value;

(3) Contracts between $2,000,000 and $5,000,000 for acquisition by telephone borrowers of existing facilities in place;

(4) Approval of sales of property and related partial releases of lien in amounts greater than $500,000 up to $5,000,000;

(5) Approval of the investment in an affiliate which exceeds the allowable distribution level of more than $50,000;

(6) Action concerning disapproval of the selection of a manager or an attorney by a telephone borrower;

(7) Agreements for the merger or consolidation of RUS telephone borrowers; and

(8) Waiver of mortgage provisions for payments of dividends or other cash distributions, where such excess payments or distributions exceed $50,000 in any year.

(f) Memoranda to telephone staff or to two or more telephone borrowers.

(g) Reports and invoices for more than $100,000 under contracts covering research services performed for RUS in connection with the telephone program.

(h) Approval of staff instructions affecting only the Telephone Program.

(i) All authorities conferred upon other persons in § 1700.144.

§ 1700.144 Deputy Assistant Administrator—Telephone.

The Deputy Assistant Administrator—Telephone in conformance with applicable regulations and RUS policy is delegated authority to approve or execute for the telephone program:

(a) Revisions of the borrower's capital structure by amendment to its charter or bylaws or by issuance of additional shares of stock.

(b) In addition, all authorities conferred upon other persons in §§ 1700.145 and 1700.149.

§ 1700.145 Regional Directors.

The Regional Directors in conformance with applicable regulations and RUS policy are delegated authority to approve or execute for the telephone program:

(a) The following loans, loan guarantees, and lien accommodations or subordinations except for those approvals reserved by the Administrator in § 1700.73(a):

(1) Loans, loan guarantees and lien accommodations or subordinations of $7,500,000 or less.

(2) Loans and loan guarantees with acquisition costs of less than $2,000,000.

(3) Loans and loan guarantees containing refinancing for less than $2,000,000.

(b) The following loan documents and related actions:

(1) Interim financing requests.

(2) Special loan contract conditions, except for changes in such conditions for loans made by the Administrator or the Assistant Administrator.

(3) Waivers of contract conditions for release of funds.

(4) Loan designs.

(5) Characteristics letters to loan applicants setting forth loan requirements proposed for inclusion in pending loan recommendations.

(6) Loan contracts and security instruments, except for loans made by the Administrator.

(c) The following matters concerning outstanding loans:

(1) Telephone loan fund releases.

(2) Telephone loan rescissions.

(3) Loan budget adjustments, except for:

(i) Loans approved by the Administrator.

(ii) Adjustments greater than $2,000,000.

(4) The placement of special controls on the advance of loan funds when it has been determined that loan security may be affected, except when the Administrator has further reserved this authority.

(5) Advance of loan funds under ''special conditional agreements'' and special controls when the conditions have been met, except when the Administrator has reserved this authority.

(6) Lien accommodations or subordinations granted to other parties by RUS or the RTB for amounts of less than $7,500,000.

(7) Principal deferments under Section 12 of the RE Act for Rural Economic Development Investments.

(8) Complete releases of lien and satisfaction when a borrower has paid in full its indebtedness.

(d) The following matters concerning borrower facilities, organization, and corporate status:

(1) Increases in salaries and other compensations to be paid to borrowers' officers, directors and managers when RUS approval is required under the mortgage.

(2) Borrowers' requests to waive competitive bidding procedures.

(3) Award of contracts (bid approval) for construction and central office equipment.

(4) Selection by telephone borrowers of force account engineering and construction.

(5) Waiver of specified special defects in title and rights-of-way.

(6) Field trial installations of telephone materials and equipment involving $250,000 or less, jointly with Director, Telecommunications Standards Division (TSD).

(7) Waiver of mortgage provisions relating to a borrower's payment of dividends or other cash distributions when such excess payments or distributions do not exceed $50,000 in any year.

(8) Approval of the investment in an affiliate of general funds that is within the allowable distribution level.

(9) Approval of sales or transfers of property and related partial releases of lien of more than $100,000 up to $500,000.

(10) Contracts for acquisition by telephone borrowers of existing facilities in place of less than $2,000,000.

(11) Approval of employment contracts with the borrower's general manager.

(12) Use of materials, equipment, and specifications not yet accepted by RUS.

(13) Letters certifying borrowing eligibility for non-borrower telephone organizations seeking financing from the Bank for Cooperatives.

(14) In addition, all authorities conferred upon other persons in §§1700.146, 1700.147, 1700.148.

[59 FR 21624, Apr. 26, 1994, as amended at 59 FR 46724, Sept. 12, 1994]

§1700.146 Chiefs, Regional Engineering Branches—Telephone.

The Chiefs, Regional Engineering Branches—Telephone in conformance with applicable regulations and RUS policy are delegated authority to approve or execute for the telephone program:

(a) The following matters for unpaid and outstanding loans:

(1) Financial Requirement Statements, RUS Form 481; and

(2) Construction loan budget adjustments except those involving change of loan budget purposes or new or revised administrative findings.

(b) The following matters concerning technical specifications and borrower facilities and organization:

(1) The selection by a borrower of an engineer or an architect and contracts for engineering and architecture services;

(2) Final inventory documents and payments to contractors and engineers;

(3) Statements of final engineering fees;

(4) Borrowers' proposals and cost estimates for force account engineering and construction;

(5) Plans and specifications for central office equipment, radio, and microwave equipment, garage and warehouse

buildings and for nonstandard central office equipment buildings;

(6) All major construction contracts. Major construction shall be defined as any project estimated to cost more than $250,000 in total;

(7) Borrowers' proposals for purchase of additions and modifications to central office equipment;

(8) Borrowers' Environmental Reports; and

(9) Borrowers' Outside Plant Layouts.

(c) In addition, all authorities conferred upon other persons in § 1700.148 (a) and (b).

[59 FR 21624, Apr. 26, 1994, as amended at 59 FR 46724, Sept. 12, 1994]

§ 1700.147 Chiefs, Regional Operations Branches—Telephone.

The Chiefs, Regional Operations Branches—Telephone in conformance with applicable regulations and RUS policy are delegated authority to approve or execute for the telephone program:

(a) The following matters concerning unpaid and outstanding loans:

(1) Affidavits, certificates, filings, and continuation statements with respect to the recording, filing or renewing of mortgages and deeds of trust, including financing statements under the Uniform Commercial Code of the applicable state after clearance when necessary by OGC;

(2) Municipal and county franchises obtained by borrowers from the standpoint of acceptability for RUS loans;

(3) State regulatory body orders and approvals from the standpoint of acceptability for RUS loans;

(4) Special legal fees to be paid by borrowers from loan funds; and

(5) Non-construction loan budget adjustment items, except those involving legal or policy questions or new or revised administrative findings.

(b) The following matters concerning borrower organization or corporate or capital structure:

(1) Certificates regarding a borrower's incorporation and Articles of Incorporation and Bylaws and changes in a borrower's corporate name;

(2) Forms of stock and equity certificates;

(3) Borrowers' cash sales of material and equipment, excluding property in place, when approval is required and releases of lien and all other documents relating to such sales;

(4) Borrowers' insurance and fidelity coverage;

(5) Borrowers' lease agreements;

(6) Approval, in amounts up to $100,000 of sales of property and related partial releases of lien;

(7) Purchase or lease of real estate by borrowers; and

(8) Management and operating agreements. When the borrowers involved are in more than one region, both chiefs must approve.

(c) In addition, all authorities conferred upon other persons in § 1700.148(c).

[59 FR 21624, Apr. 26, 1994, as amended at 59 FR 46724, Sept. 12, 1994]

§ 1700.148 General Field Representatives—Telephone.

The General Field Representatives—Telephone in conformance with applicable regulations and RUS policy are delegated authority to approve or execute for the telephone program:

(a) Plans and specifications for RUS standard Form 772, central office buildings, or borrower specific standardized central office building plans and specifications, repeaters, standardized lightwave equipment, subscriber carrier and trunk carrier. Also, outside plant plans and specifications that conform to an approved design.

(b) Outside plant contracts up to $250,000 and all other construction and equipment contracts less than $100,000.

(c) Results of the Area Coverage Survey.

§ 1700.149 Director—Telecommunications Standards Division.

The Director—Telecommunications Standards Division in conformance with applicable regulations and RUS policy is delegated authority to approve or execute for the telephone program:

(a) Reports and invoices up to $100,000 submitted under contracts covering research services performed for RUS in connection with the telephone program.

(b) Field trial installations of telephone materials and equipment involving $250,000 or less, jointly with the appropriate regional director.

§1700.150 Technical Standards Committees "A" and "B"—Telephone.

The Technical Standards Committees ''A'' and ''B''—Telephone in conformance with applicable regulations and RUS policy are delegated authority to approve for the telephone program:

(a) Technical Standards Committee ''A''—Telephone accepts or rejects all proposals of standard specifications, drawings, material and equipment submitted for acceptance for use on RUS financed telephone systems.

(b) Technical Standards Committee ''B''—Telephone reviews and makes a final decision on cases referred to it by Committee ''A'' or by appeal from a sponsor from an adverse decision of Committee ''A''.

§§1700.151—1700.159 [Reserved]

Subpart K—Delegations of Authority; Financial Services

SOURCE: 59 FR 21624, Apr. 26, 1994, unless otherwise noted.

§1700.160 General.

The following delegations of authority in this subpart are made by the Administrator to the Financial Services Staff for assigned loan servicing projects.

§1700.161 Program Advisor, Financial Services Staff.

The Program Advisor, Financial Services Staff in conformance with applicable regulations and RUS policy is delegated authority to approve and execute for the Financial Services Staff (FSS):

(a) Approval in amounts of less than $25,000,000 for:

(1) The use of general funds; or

(2) Sales and transfers of property and related releases of lien.

(b) Disapproval of the selection of a manager or attorney by a borrower.

(c) Power supply contracts and agreements including wholesale power, fuel, interconnections, wheeling, participation agreements, lease agreements for facilities or properties, and power sales agreements with non-RE Act beneficiaries.

(d) Wholesale power rates.

(e) Contracts for the construction and purchase of materials and equipment.

(f) Retail rate contracts between borrowers and others relating to large power installations.

(g) Additional authorities, as specifically delegated by the Administrator, necessary to effectively resolve troubled borrower situations.

(h) Authority to execute or testify, consistent with USDA Departmental Regulations, on behalf of RUS as follows:

(1) Affidavits and certificates concerning borrowers assigned to FSS.

(2) Testify on behalf of the Agency before regulatory bodies or courts on matters pertaining to borrowers assigned to the FSS.

§1700.162—1700.169 [Reserved]

Subpart L—Delegations of Authority; Financial Operations Activities

SOURCE: 59 FR 21624, Apr. 26, 1994, unless otherwise noted.

§1700.170 General.

The following delegations of authority in this subpart are made by the Administrator to the Financial Operations Division (FOD).

§1700.171 Deputy Administrator.

The Deputy Administrator in conformance with applicable regulations and RUS policy is delegated authority to approve or execute for FOD all authorities conferred upon other persons in this subpart.

§1700.172 Director, Financial Operations Division.

The Director, Financial Operations Division in conformance with applicable regulations and RUS policy is delegated authority to approve and execute for FOD:

(a) Standard Form 1151, Nonexpendable Transfer Authorization, for the following activities related to loans made to the Administrator of RUS by

the Secretary of Treasury under authority of section 3(a) and 304 of the RE Act:

(1) Advances of principal on notes executed by the Administrator; and

(2) Payment of principal on loans made by the Administrator.

(b) Letters to the Federal Financing Bank (FFB) granting RUS approval to requests from borrowers, which are concurred in by the applicable Regional Director in the Electric or Telephone program for:

(1) Extensions of short-term maturity dates of advances on the specified maturity date;

(2) Prepayment of short-term maturities, including prepayment for the purpose of extending to long-term prior to the scheduled maturity date; and 7

(3) Prepayments of long-term maturities.

(c) Endorsements or assignments on promissory notes or other collateral pledged by borrowers as security for loans, as may be necessary in connection with the return of such documents to borrowers, due to the payment of the obligations in full or in order that the borrowers may institute legal action thereon or in connection therewith and the transmittal to the borrowers of such promissory notes or other collateral pledged by the borrower.

(d) Cancellation or endorsement due to payment on the borrowers' notes which have been paid in full or which are to be returned to borrowers by reason of the cancellation of such notes resulting from the receipt of RUS of funding, renewal or substituted notes and transmittal to the borrower.

(e) Actions concerning borrower loan accounting, computations, procedures and policies.

(f) Liaison responsibility with the Federal Financing Bank, the Department of Treasury.

(g) Liaison responsibility with General Accounting Office (GAO).

(h) In addition, all authorities conferred upon other persons in § 1700.173.

§ 1700.173 Chief, Loans Receivable Branch.

The Chief, Loans Receivable Branch in conformance with applicable regulations and RUS policy is delegated authority to approve and execute for FOD:

(a) Preparation and forwarding of Energy Resource Conservation (ERC) loan documents to the Office of the General Counsel (OGC).

(b) Preparation and forwarding of basis date agreements to OGC.

§§ 1700.174—1700.189 [Reserved]

PART 1703—RURAL DEVELOPMENT

Subpart A—[Reserved]

Subpart B—Rural Economic Development Loan and Grant Program

Sec.

1703.10 Purpose.
1703.11 Policy.
1703.12 Definitions.
1703.13 Source of funds.
1703.14 Disposition of funds in the subaccount.
1703.15 [Reserved]
1703.16 Eligibility.
1703.17 Uses of zero-interest loans and grants.
1703.18 Types of projects eligible for grant funding.
1703.19 General requirements for grant funding.
1703.20 Ineligible uses of zero-interest loans and grants.
1703.21 Limitations on the use of zero-interest loan and grant funds.
1703.22 Revolving loan program.
1703.23 Supplemental funds requirements for zero-interest loans and grants.
1703.24 [Reserved]
1703.25 Significance of RUS financing to the total project cost.
1703.26 [Reserved]
1703.27 Owner's equity in the project.
1703.28 Maximum and minimum sizes of a zero-interest loan or grant application.
1703.29 Terms of zero-interest loan repayment.
1703.30 Approval of agreements.
1703.31 Transfer of employment or business.
1703.32 Environmental requirements.
1703.33 Other considerations.
1703.34 Applications.
1703.35 Section of the application covering the selection factors.
1703.36 Section of the application covering the project description.
1703.37 Section of the application covering the environmental impact of the project.
1703.38—1703.44 [Reserved]
1703.45 Review and analysis of applications.
1703.46 Documenting the evaluation and selection of applications for zero-interest loans and grants.

1703.47—1703.57 [Reserved]
1703.58 Post selection period.
1703.59 Final application processing and legal documents.
1703.60 [Reserved]
1703.61 Disbursement of zero-interest loan and grant funds.
1703.62—1703.65 [Reserved]
1703.66 Review and other requirements.
1703.67 Changes in project objective or scope.
1703.68 Loan and grant termination provisions.
1703.69—1703.79 [Reserved]

Subpart C—Rural Business Incubator Program [Reserved]

1703.80—1703.99 [Reserved]

Subpart D—Distance Learning and Telemedicine Loan and Grant Program

1703.100 Purpose.
1703.101 Policy.
1703.102 Definitions.
1703.103 Applicant eligibility and allocation of funds.
1703.104 Allowable grant and loan funding percentage.
1703.105 Grant and loan purposes.
1703.106 In-kind matching provisions.
1703.107 Ineligible loan and grant purposes.
1703.108 Maximum and minimum sizes of a grant and a loan.
1703.109 The application for financial assistance.
1703.110 Conflict of interest.
1708.111 [Reserved]
1703.112 Determination of types of financial assistance.
1703.113 Application filing dates, location, processing, and public notification.
1703.114—1703.116 [Reserved]
1703.117 Criteria for scoring applications.
1703.118 Other application selection provisions.
1703.119 Appeal provisions.
1703.120—1703.121 [Reserved]
1703.122 Further processing of selected applications.
1703.123—1703.125 [Reserved]
1703.126 Disbursement of loan and grant funds.
1703.127 Reporting and oversight requirements.
1703.128 Audit requirements.
1703.129 Repayment of loans.
1703.130—1703.134 [Reserved]
1703.135 Grant and loan administration.
1703.136 Changes in project objectives or scope.
1703.137 Grant and loan termination provisions.
1703.138—1703.139 [Reserved]
1703.140 Expedited telecommunications loans.
APPENDIX A TO SUBPART D TO PART 1703—ENVIRONMENTAL QUESTIONNAIRE.

Subpart E—Deferments of RUS Loan Payments for Rural Development Projects

1703.300 Purpose.
1703.301 Policy.
1703.302 Definitions and rules of construction.
1703.303 Eligibility criteria for deferment of loan payments.
1703.304 Restrictions on the deferment of loan payments.
1703.305 Requirements for deferment of loan payments.
1703.306 Limitation on funds derived from the deferment of loan payments.
1703.307 Uses of the deferments of loan payments.
1703.308 Amount of deferment funds available.
1703.309 Terms of repayment of deferred loan payments.
1703.310 Environmental considerations.
1703.311 Application procedures for deferment of loan payments.
1703.312 RUS review requirements.
1703.313 Compliance with other regulations.

AUTHORITY: 7 U.S.C. 901 *et seq.* and 950aaa *et seq.*; Pub. L. 103–354, 108 Stat. 3178 (7 U.S.C. 6941 *et seq.*).

SOURCE: 54 FR 6870, Feb. 15, 1989, unless otherwise noted. Redesignated at 55 FR 39394, Sept. 27, 1990.

EDITORIAL NOTE: Nomenclature changes to part 1703 appear at 55 FR 39397, Sept. 27, 1990.

Subpart A—[Reserved]

Subpart B—Rural Economic Development Loan and Grant Program

SOURCE: 57 FR 44317, Sept. 25, 1992, unless otherwise noted.

§ 1703.10 Purpose.

(a) This subpart sets forth RUS's policies and procedures for making zero-interest loans and grants to borrowers in accordance with the cushion of credit payments program authorized in section 313 of the Act (7 U.S.C. 940c).

(b) The zero-interest loans and grants are provided for the purpose of promoting rural economic development and job creation projects.

§ 1703.11 Policy.

(a) It is RUS's policy that borrowers use the Rural Economic Development Loan and Grant Program to promote projects that will result in a sustainable increase in the productivity of economic resources in rural areas and thereby lead to a higher level of income for rural citizens.

(b) It is RUS's policy that borrowers promote economic development in rural areas and job creation projects that:

(1) Are based on sound economic and financial analyses; and

(2) Take a long-term perspective.

(c) It is RUS's policy to direct the funds under this program to projects which are located in, or will primarily benefit, those rural areas that are experiencing the greatest economic hardship.

(d) It is RUS's policy to encourage economic development in rural areas and job creation projects without regard to service area.

(e) It is RUS's policy to encourage borrowers to make cushion of credit payments.

(f) It is RUS's policy to maintain liaisons with officials of other Federal, state, regional and local rural development agencies to coordinate this program with other rural economic development programs.

§ 1703.12 Definitions.

Act—the Rural Electrification Act of 1936, as amended (7 U.S.C. 901 *et seq.*).

Administrator— the Administrator of the Rural Utilities Service or the Administrator's designee.

Approved purpose—a purpose that the Administrator has specifically approved in the letter of agreement covering the use of the RUS zero-interest loan and/or grant funds provided to the borrower.

Borrower—an entity that has outstanding RUS and/or Rural Telephone Bank (RTB) loan(s) or loan guarantee(s) for an electric or telephone purpose under the provisions of the Act.

Business incubator—a facility in which small businesses can share premises, support staff, computers, software or hardware, telecommunications terminal equipment, machinery, janitorial services, utilities, or other overhead expenses, and where such businesses can receive technical assistance, financial advice, business planning services or other support. The business incubator program, however, does not necessarily have to involve the sharing of premises.

Cushion of credit payment—a voluntary unscheduled payment made after October 1, 1987, on an RUS note, which is credited to the cushion of credit account of a borrower.

Demonstration Project—a project for which the owner agrees in writing to provide RUS, if requested, with detailed information on the steps it takes in organizing and operating the project, will permit RUS and RUS's guests to make reasonable visits to the project, and honor any other reasonable RUS request to disseminate information on the project. Examples of information include a description of incorporation procedures, types of financing obtained, permits required by governments, amount of time required for various stages of the project, sources of technical assistance from government programs, private foundations or trade organizations, any experiences or lessons that the owner wishes to share with the public and other information which will assist RUS in promoting similar projects. It will not require the disclosure of trade secrets or proprietary techniques.

Electric or telephone purpose—a purpose that:

(1) The Administrator or Governor of the RTB is authorized to finance under sections 2, 4, 5, 201, 305, and 408 of the Act; or

(2) Is characterized as furnishing, generating or transmitting electric energy or other activities involved in providing electricity, or is characterized as providing telephone service. It will include electric and telephone facilities and equipment used in connection with providing such a service. It will not include a relatively insignificant amount of customer premises equipment, as determined by the Administrator.

Job creation—creation of jobs in rural areas. This includes the implementation of a project in close enough proximity to rural areas so that it is likely that the majority of the jobs created will be held by rural residents.

Letter of agreement—a legal document executed by the Administrator and the borrower that contains certain terms, conditions, requirements and understandings applicable to the zero-interest loan and/or grant, as determined by the Administrator.

Letter of credit—a commitment from a financial institution satisfactory to the Administrator to honor a draft drawn on the RUS borrower should the RUS borrower fail to pay on a zero-interest loan.

Pass-through-grant—a grant that the borrower makes to another entity that will own or undertake the project using the proceeds of the RUS grant.

Pass-through-loan—a loan that the borrower makes to another entity that will own or undertake the project using the proceeds of the RUS zero-interest loan.

Project—an undertaking that develops the economy of a rural area or results in job creation. As used in subpart B, the term ''project'' includes both direct undertakings by borrowers as well as those sponsored by other parties using the proceeds of pass-through-loans or pass-through-grants. It is the component or phase of the undertaking for which the borrower is requesting RUS funds, as determined by the Administrator.

Project feasibility studies—studies, analyses, designs, reports, manuals, guides, literature, or other forms of creating and/or disseminating information for use in evaluating or developing a proposed project. For example, it would include market research and environmental studies.

REA means the Rural Electrification Administration formerly an agency of the United States Department of Agriculture and predecessor agency to RUS with respect to administering certain electric and telephone loan programs.

Reasonable loan servicing charges—charges for expenses the borrower incurs to service a loan provided to another entity unaffiliated with the borrower using the proceeds of the RUS zero-interest loan. The charges over the life of the loan for routine loan servicing expenses must not exceed an amount equal to the sum of one percent per year of the outstanding principal on the first day of each year on the borrower's RUS zero-interest loan. The charges for extraordinary expenses associated with collection of delinquent payments or other similar expenses must receive the prior approval of the Administrator.

Revolving loan program—a program established and operated by the Borrower, using grant funds, the Borrower's contribution and loan repayments to make loans to businesses or others for rural economic development and job creation purposes.

RTB—the Rural Telephone Bank, established as a body corporate and an instrumentality of the United States, to obtain supplemental funds from non-Federal sources and utilize them in making loans, for the purposes of financing, or refinancing, the construction, improvement, expansion, acquisition, and operation of telephone lines, facilities, or systems, for RUS Borrowers financed under sections 201 and 408 of the Act.

Rural area—a rural area as defined in section 13 of the Act.

Rural economic development—job creation or preservation or community facilities improvement projects that clearly demonstrate significant benefits to rural areas.

Rural economic development account—a federally insured account into which the borrower deposits any advances of zero-interest loan funds from RUS until the borrower disburses the funds.

RUS means the Rural Utilities Service, an agency of the United States Department of Agriculture established pursuant to Section 232 of the Federal Crop Insurance Reform and Department of Agriculture Reorganization Act of 1994 (Pub. L. 103–354, 108 Stat. 3178), successor to REA with respect to administering certain electric and telephone programs. See 7 CFR 1700.1.

Scope of work—a detailed plan, which has been approved by the Administrator, covering the work to be performed by the loan and/or grant recipient using the loan and/or grant funds.

Significant stockholder—an owner or holder of five percent or more of the common stock (or shares) or five percent or more of the preferred stock (or shares) of the RUS borrower.

Subaccount—the rural economic development subaccount created by section 313 of the Act.

Technical assistance—analysis of facilities or processes, managerial, financial and operational consultation by independent qualified entities to assist project owners to identify and evaluate problems or potential problems and provide training to enable project owners to successfully implement, manage, operate and maintain viable projects.

Tribal government—The governing body or a governmental agency of any Indian tribe, band, nation, or other organized group or community (including any Native village as defined in 43 U.S.C. 1602) certified by the Secretary of the Interior as eligible for the special programs and services provided through the Bureau of Indian Affairs.

[57 FR 44317, Sept. 25, 1992, as amended at 59 FR 11706, Mar. 14, 1994; 59 FR 53930, Oct. 27, 1994; 59 FR 66440, Dec. 27, 1994]

§ 1703.13 Source of funds.

Funds provided under this program come from interest differential credits to the subaccount and appropriated amounts made available to the subaccount.

§ 1703.14 Disposition of funds in the subaccount.

Zero-interest loans and grants will be made during each fiscal year to the full extent of the amounts held in the subaccount subject only to limitations imposed by law. For administrative purposes, the Administrator will make a determination of the fiscal year-end amount held in the subaccount as of a date prior to, but as near as practicable to, the end of the fiscal year.

§ 1703.15 [Reserved]

§ 1703.16 Eligibility.

Zero-interest loans and grants may be made to any borrower that is not delinquent on any outstanding Federal debt or in bankruptcy proceedings. However, a zero-interest loan or grant will not be made to a borrower during any period in which the Administrator has determined that no additional financial assistance of any nature should be provided to the borrower pursuant to any provision of the Act. The determination to suspend eligibility for assistance under this subpart will be based on one or more of the following factors:

(a) The borrower's demonstrated unwillingness to exercise diligence in repaying RUS loans or loan guarantees that results in the Administrator being unable to find that a loan, or loan guaranteed by RUS, would be repaid within the time agreed;

(b) The borrower's demonstrated unwillingness to meet requirements in RUS's legal documents or regulations; or

(c) Other actions on the part of the borrower that thwart the achievement of the objectives of the RUS program.

§ 1703.17 Uses of zero-interest loans and grants.

(a) Zero-interest loans and grants must be used exclusively to promote rural economic development and/or job creation projects, including, but not limited to, project feasibility studies, start-up costs, business incubator projects, and other reasonable expenses for the purpose of fostering rural economic development.

(b) The Administrator will give preference to providing funds under this subpart for projects other than business incubator projects to the extent funds are available to borrowers for business incubator projects from a rural business incubator fund administered by the Administrator in accordance with section 502 of the Act (7 U.S.C. 950aa–1).

(c) Zero-interest loans and grants may be used for Projects that enhance rural economic development by providing advanced telecommunications services and computer networks for medical and educational services, as follows: (1) For telecommunications end use and/or transmission facilities; and (2) Other portions of the project, such as modifications to buildings necessary to accommodate telecommunications equipment for medical care and other services, public or private education, and employment training.

(d) Zero-interest loans and grants may be used for community antenna television systems or facilities. The borrower will document that such facilities provide a tangible economic

benefit to the proposed service area in accordance with §1703.46 of this subpart. Notwithstanding this, the Administrator reserves the right to deny any proposal for community antenna television systems or facilities. Community antenna television systems or facilities will be considered for funding in accordance with §1703.46 of this subpart and this section only when all of the following conditions exist:

(1) The proposed community antenna television system or facility is established in cooperation with a local educational and/or medical entity(ies) to provide educational and/or medical programming which addresses specific needs of rural residents;

(2) Services to be provided by the proposed community antenna television systems or facilities are not available in the area to be served, or services are not being provided by the existing television programming carrier at an affordable cost to residents; and

(3) Such community antenna systems or facilities will not present undue competition for existing television programming carriers in the area.

[57 FR 44317, Sept. 25, 1992, as amended at 59 FR 11706, Mar. 14, 1994; 59 FR 53930, Oct. 27, 1994]

§1703.18 Types of projects eligible for grant funding.

Grants may be made for the following purposes:

(a) The establishment and operation of a revolving loan program by Borrowers in accordance with §1703.22;

(b) Project feasibility studies to assist for-profit and non-profit entities in conjunction with a loan for an authorized project. Feasibility studies will include management assistance, consultation, and research for planning individual projects that the Borrower has determined will benefit the rural community. Feasibility studies which may be financed under this section must be performed by qualified entities subject to §1703.19, General requirements for grant funding. Feasibility studies must address the important aspects of project assessment and planning to ensure, to the extent practicable, the success of projects. These include the market, technical, economic, financial, and managerial issues related to project feasibility. Feasibility studies may be funded in connection with viable projects as a reimbursement to the project owner for expenses incurred during the initial planning stages of the project prior to project funding by RUS;

(c) The acquisition of technical assistance in conjunction with projects funded with zero-interest loans to enable for-profit and non-profit entities to obtain analysis of facilities and processes, managerial, financial and operational consultation. Grant funds may also be used in conjunction with zero-interest loans to enable non-profit business incubators to provide technical assistance. Technical assistance will enable project owners to identify and evaluate problems or potential problems and provide training in order that they may ultimately implement, manage, operate and maintain viable projects which are financed with zero-interest loan funds. Technical assistance financed under this section must be performed by qualified entities which are independent of the project owner subject to §1703.19, General requirements for grant funding;

(d) Business incubators established by non-profit organizations to assist in developing emerging enterprises. Business incubators funded in conjunction with zero-interest loans will include those facilities in which single or multiple businesses may use premises, support staff, computer software, hardware, telecommunications equipment, machinery, janitorial services, utilities, or other overhead facilities. Grant funding may also be provided to allow business incubators to provide feasibility studies and technical assistance in accordance with paragraphs (b) and (c) of this section;

(e) Community development assistance to non-profit entities and public bodies for employment creation projects, or other projects which provide needed community facilities and services;

(f) Facilities and equipment to public, for-profit and non-profit entities to provide education and training to rural residents to facilitate economic development. Equipment and facilities may be funded to enable rural businesses to

provide educational and job enhancement skills to employees;

(g) Facilities and equipment to public, for-profit and non-profit entities to provide medical care to rural residents. Equipment and facilities may be funded to enable eligible entities to provide medical training and related professional health care skills to rural health care providers;

(h) Projects which utilize advanced telecommunications and/or computer networks to facilitate medical or educational services or job training in accordance with paragraphs (f) and (g) of this section.

[59 FR 11706, Mar. 14, 1994, as amended at 59 FR 38341, July 28, 1994]

§ 1703.19 General requirements for grant funding.

(a) Grants made under § 1703.18(a), establishment and operation of a revolving loan program by Borrowers, will be limited to Borrowers and can be made without zero-interest loans. Grants made under § 1703.18 (b) through (h) will be made only in conjunction with zero-interest loans, and on a pass-through basis.

(b) Pass-through grant funding for projects under § 1703.18 (b), (c), (f), (g) and (h) will be available for non-profit and for-profit entities. Pass-through grant funding for projects under § 1703.18 (d) and (e) will be available only for non-profit entities.

(c) All projects funded with zero-interest loans and grants will require supplemental funding in accordance with § 1703.23. For grants made under § 1703.18(a), the portion eligible for RUS funding may be fully funded with grant funds. For all other grants funded under § 1703.18, the portion of project costs eligible for RUS funding may be funded up to 20 percent with grant funds.

(d) Grant funding will be provided only to the extent necessary for a feasible project. A feasible project is a project which expects to generate sufficient income to pay operating expenses and debts and compensate for depreciation of equipment and facilities for the project which is to be funded by RUS. Depreciation must be based on allowable depreciation schedules as set forth by the United States Internal Revenue Service. Borrowers whose analyses of projects show feasibility without grant funds should not apply for grant funding. Borrowers requesting pass-through grant funds will base grant funding requests on borrower projected income and expense projections for the project, and documentation regarding depreciation of the equipment and facilities for the project. The Administrator will determine whether the Borrower's projections of income, expenses and depreciation are reasonable.

(e) For projects that project insufficient operating revenue the first two years to show feasibility, borrowers should first consider the deferral provisions set forth in § 1703.29(b) before determining the appropriate level of requested grant funding. Zero-interest loan and grant funding will be approved in accordance with paragraph (d) of this section based on the option which results in the lowest required grant percentage.

(f) The owner of the pass-through project that receives grant funds will be encouraged to commit that the project will be a demonstration project.

(g) Borrowers or project owners must demonstrate the availability and commitment of other sources of funding needed to complete a project in addition to RUS loan and/or grant funds, prior to the first advance of RUS funds.

(h) Feasibility studies and/or technical assistance funded with grants under § 1703.18 (b) and (c) must be performed by entities which are independent of the Borrower and qualified to provide such services. The project owner, if deemed qualified in accordance with this paragraph, may furnish a feasibility study under § 1703.18(b). Entities furnishing technical assistance under § 1703.18(c), must be independent of the project owner. To be deemed qualified, entities providing feasibility studies and/or technical assistance must:

(1) Provide sufficient documentation evidencing their proven ability, background and experience to furnish such services; and

(2) Provide sufficient documentation evidencing their legal authority and capacity to furnish such services.

[59 FR 11706, Mar. 14, 1994]

§1703.20 Ineligible uses of zero-interest loans and grants.

(a) Zero-interest loans and grants must not be used:

(1) To fund or assist projects of which any director, officer, general manager or significant stockholder of the Borrower, or close relative thereof, is an owner, stockholder, partner or director, or which would, in the judgment of the Administrator, create a conflict of interest or the appearance of a conflict of interest. The Borrower must disclose to the Administrator information regarding any conflict of interest, potential conflict of interest or any appearance of a conflict of interest. The Administrator will determine whether there is a conflict of interest or whether any potential conflict of interest or appearance of a conflict of interest may adversely affect RUS's interests. A Borrower organized as, or consisting of a cooperative, widely held mutual corporation, tribal government, municipal power corporation, public power district, or a similar widely held organization would ordinarily be able to have an ownership interest in or manage a project operated on either a for-profit or non-profit basis. A Borrower organized as a closely held, for-profit corporation with more than 5 percent of its stock held by one legal person, its subsidiary or an affiliate, would ordinarily be able to own or manage a project operated on a non-profit basis only;

(2) For any costs incurred on the project:

(i) Prior to receipt of the Borrower's completed application by RUS during an application period unless the Administrator has specifically approved such usage in writing; or

(ii) For site development, the destruction or alteration of buildings, or other activities that would adversely affect the environment or limit the choice of reasonable alternatives prior to satisfying the requirements of §1703.32;

(3) By the Borrower to purchase or lease any real property, materials, equipment, or services from its subsidiary, an affiliate, or significant stockholders, officers, managers or directors of the Borrower, or close relatives thereof, where the purchase or lease has not been fully disclosed to the Administrator and received the Administrator's prior written approval;

(4) By the recipient of a pass-through-loan or pass-through-grant to purchase or lease any real property, materials, equipment, or services from the Borrower, its subsidiary, an affiliate of the Borrower, or significant stockholders, officers, managers or directors of the Borrower, or close relatives thereof, where the purchase or lease has not been fully disclosed to the Administrator and received the Administrator's prior written approval;

(5) To pay off or refinance existing indebtedness incurred prior to receipt of the Borrower's completed application by RUS or for refinancing or repaying a loan made under the Act or a program administered by the Administrator;

(6) For any electric or telephone purpose, as determined by the Administrator;

(7) For the Borrower's electric or telephone operations or for any operations affiliated with the Borrower unless the Administrator has specifically informed the Borrower in writing that the operations are part of the approved purposes;

(8) To pay the salaries of any employee or owner of the Borrower, its subsidiaries, or affiliates. This restriction does not prohibit the use of loan or grant funds for printing and similar costs for project feasibility studies it has prepared, commissioned or purchased if specifically approved by the Administrator. This restriction is subject to the operating expense allowance for revolving loan funds set forth in §1703.22 (a)(6);

(9) To fund feasibility studies and technical assistance as set forth in §1703.18 independently of projects which are funded under the zero-interest loan and grant program;

(10) For community antenna television systems or facilities except as provided in §1703.17(d) of this subpart;

(11) For proposed projects located in areas covered by the Coastal Barrier Resources Act (16 U.S.C. 3501 *et seq.*); or

(12) For anything other than an approved purpose.

(b) [Reserved]

[59 FR 11707, Mar. 14, 1994, as amended at 59 FR 53930, Oct. 27, 1994]

§ 1703.21 Limitations on the use of zero-interest loan and grant funds.

(a) A borrower may not charge interest for the use of the proceeds of the zero-interest loan provided under this program; however, it may charge reasonable loan servicing charges, reasonable legal fees involved in providing the RUS funds to the recipient, and the amount paid for an irrevocable letter of credit made payable to RUS and issued on behalf of the borrower that guarantees repayment of an RUS zero-interest loan, all as determined by the Administrator. A borrower may require the recipient of a pass-through-loan to provide and/or obtain adequate security for the zero-interest loan funds.

(b) A borrower must calculate any costs to charge in connection with the use of grant funds under this program for the project and must temporarily deposit the grant funds in accordance with 7 CFR parts 3015, Uniform Federal Assistance Regulations, and 3016, Uniform Administrative Requirements for Grants and Cooperative Agreements to State and Local Governments, as appropriate. Grant funds will be disbursed to the Borrower in accordance with § 1703.61(b).

(c) A borrower may not make a profit from any zero-interest loan or grant provided from the subaccount, with the exception of the $500 interest income exclusion in paragraph (d) of this section.

(d) The Borrower may not requisition zero-interest loan funds unless those funds are deposited into the Borrower's RUS construction fund trustee account. The Borrower will be required to set up a separate Federally insured account called the Rural Economic Development Account, if loan funds are not expected to be disbursed within two months after receipt from RUS. All interest earned on temporarily deposited zero-interest loan funds in excess of $500 per 12-month period must be used for approved purposes or returned to RUS. Interest earned in excess of $500 per 12 month period and returned to RUS will not be used to reduce the Borrower's principal indebtedness. Grant funds will be disbursed by RUS in accordance with 7 CFR parts 3015 and 3016, and § 1703.61 (b).

(e) The borrower may not condition the receipt of the proceeds of a zero-interest loan or grant under this subpart with the requirement that the recipient take electric or telephone service from the borrower.

[57 FR 44317, Sept. 25, 1992, as amended at 59 FR 11708, Mar. 14, 1994]

§ 1703.22 Revolving loan program.

Grant funds under this section will be provided only to RUS Borrowers on a non pass-through basis. RUS Borrowers will, in turn, provide loans to foster rural economic development in accordance with this subpart and the specific requirements of this section.

(a) *General.* Grant funds disbursed to RUS Borrowers to establish revolving loan programs under this section are subject to the following requirements:

(1) The uses, restrictions and limitations for zero-interest loans set forth in §§ 1703.17, 1703.20 and 1703.21 respectively;

(2) Loans made by RUS Borrowers initially lending grant funds disbursed by RUS are limited to types of projects specified in § 1703.18 (d), (e), (f), (g) and (h). Loans may also be made for feasibility studies and technical assistance in accordance with § 1703.18 (b) and (c), respectively, but only for those types of projects specified in this paragraph (a)(2). Loans made from repayments of the initial loans made by RUS Borrowers may be used for any rural economic development purpose in accordance with a prior agreement between the Borrower and RUS;

(3) All other requirements relevant to zero-interest pass-through loans and grants outlined in this subpart, except the minimum size of a zero-interest loan as specified in § 1703.28(f);

(4) The initial loans made from the revolving loan fund using the grant funds must carry an interest rate of zero percent; however, loans made from repayments of the initial loan may carry an interest rate in accordance with prior agreement with RUS. In either case, the Borrower may charge reasonable loan servicing fees;

(5) The Borrower will provide a board resolution certifying a commitment to

provide and maintain additional funding to the revolving loan fund in an amount no less than 20 percent of the RUS grant approved. The Borrower will provide documentation that the additional funding has been deposited in the appropriate account in § 1703.22(h)(1) prior to grant disbursement. This requirement does not pertain to supplemental funding requirements for individual projects as set forth in § 1703.23. Additional funding required in this paragraph pertains only to borrowers establishing revolving loan funds, with the following provisions:

(i) Use of additional funding is subject to requirements set forth in paragraph (b) of this section and with RUS concurrence;

(ii) Individual projects funded under this section are subject to supplemental funds requirements set forth in § 1703.23;

(iii) At the Borrower's option with RUS concurrence, all or a portion of the additional funding may be used to assist project owners receiving funding from Federal grant funds under this section to meet their supplemental funding requirements set forth in § 1703.23 of this subpart. Such additional funding will be deemed as Federal funds and accounted for in accordance with paragraph (h)(1)(i)(A) of this section for electric borrowers or paragraph (h)(1)(ii)(A) of this section for telephone borrowers, as appropriate;

(iv) At the Borrower's option, all or a portion of the additional funding may be retained as non-Federal funds, for any rural economic development project(s), subject to paragraph (g) of this section and RUS concurrence. Additional funding committed as non-Federal will be accounted for in accordance with paragraph (h)(1)(i)(E) of this section for electric borrowers or paragraph (h)(1)(ii)(E) of this section for telephone borrowers, as appropriate;

(6) Grant funds will only be provided to an RUS Borrower for a revolving loan program when a proposed budget submitted to RUS demonstrates and the Borrower agrees in writing that no more than 10 percent of grant funds received are used to cover operating expenses of the revolving loan program. Operating expenses include the costs of administering the revolving loan fund and the provision of technical assistance to project owners. All proceeds in excess of those needed to cover authorized expenses, as described above, must revert to the revolving fund and be available for re-lending for eligible projects. Budgets which reflect expenses incurred in operating the fund must be submitted to RUS annually;

(7) The Borrower may charge reasonable loan servicing charges. For purposes of this section, loan servicing charges must not exceed an amount equal to the sum of one percent per year of the outstanding principal on the first day of each year on each project owner's zero-interest loan which is made from the RUS grant proceeds;

(8) The Borrower will submit documentation indicating that potential projects which are eligible for funding have sufficiently progressed in the planning stage to allow grant funding approved for a revolving loan program to be requisitioned by the Borrower, disbursed by RUS, and loaned to recipients within 3 years of the date of grant approval by RUS. Grant funds that have not been requisitioned within 3 years will be cancelled, unless the Administrator has approved an extension in writing. Grant funds will be disbursed by RUS in accordance with paragraphs (d) and (g) of this section;

(9) If the revolving loan program is terminated, further disbursement of grant funds will be cancelled. Repayments of loans made using grant funds which have been disbursed will be used in accordance with the Borrower's rural development plan;

(10) Payment of creditors which provide interim or construction financing to a viable project for eligible purposes as set forth in § 1703.18 of this subpart may be authorized. Refinancing for the sole purpose of replacing higher interest conventional financing with zero-interest revolving loan funds is not authorized.

(b) *The Borrower's rural development plan.* RUS requires that the revolving loan program be administered in accordance with a rural development plan, developed by the Borrower and approved by RUS. The plan must be of

sufficient detail to provide RUS with a complete understanding of what the Borrower intends to accomplish by administering a revolving loan program. The rural development plan will provide the mechanics of how the revolving loan funds will be disbursed to the project owner. The rural development plan must outline the Borrower's plans for administering the revolving loan program, during the initial period when RUS grant funds are lent by the Borrower and after the revolving fund becomes non-Federal in accordance with paragraph (g) of this section. The plan must outline the following:

(1) Specific objectives for the revolving loan program, revolving loan operating procedures, lending parameters, maximum and minimum loan amount, and types of projects to be funded;

(2) Documentation of Borrower's coordination of lending activities with other local entities that provide financing for rural economic development projects. Such documentation will indicate that the Borrower will not compete with, but supplement other sources of legal financing;

(3) Eligibility criteria if other than outlined in this subpart;

(4) The application process and method of disposition of the funds to the project owner; and

(5) A procedure for monitoring the project owner's accomplishments and reporting requirements by the project owner's management.

(c) *The Borrower's scope of work.* Borrowers applying for grant funding under this section must submit a scope of work to RUS. Applications for grants under this section will be evaluated for funding based on the Borrower's rural development plan in paragraph (b) of this section and the scope of work. The scope of work must contain the following items:

(1) Documented need for grant funds. The Borrower must identify a sufficient number of rural development projects of the type specified in § 1703.18 (d), (e), (f), (g), and (h) which are currently being planned requiring zero-interest loans equal to the amount of grant assistance requested from RUS. These projects may be supported with a community facilities plan, or other development plan, prepared by local community leaders in cooperation with the Borrower. For each project, the Borrower will submit information required under § 1703.34;

(2) Documented authority and ability of the Borrower to administer a revolving rural development loan program in accordance with the provisions of this subpart. The Borrower must provide a complete listing of all personnel responsible for administering this program along with a statement of their qualifications and experience;

(3) Documented ability of the Borrower to commit financial resources under the control of the Borrower to assist in the establishment of a rural development revolving loan program. This should include a statement of the sources of funding for the administration of the Borrower's operations, as well as financial and technical assistance for projects;

(4) Documentation that the Borrower has secured commitments of significant financial support from public agencies and/or private organizations for supplemental funding to support a rural development loan program;

(5) A list of proposed fees and other charges the Borrower will assess the projects it funds; and

(6) The Borrower's rural development policy for non-Federal funds in accordance with paragraphs (b) and (g) of this section.

(d) *Grant processing and approval.* Applications for grants to establish revolving loan funds will be reviewed in accordance with §§ 1703.45 and 1703.46, and with the Borrower's rural development plan and scope of work outlined in paragraphs (b) and (c) of this section. Grants will be processed in accordance with §§ 1703.58 and 1703.59.

(e) *Disbursement of grant funds.* Borrowers are not authorized to commence projects to be funded under this section until those projects have been submitted for authorization in accordance with paragraph (c)(1) of this section, or the projects have been submitted for authorization subsequent to grant approval in accordance with paragraph (e)(2) of this section. RUS grant funds will be disbursed on a reimbursement basis. However, upon written justification by borrowers and approval by the Administrator, borrowers unable to

fund projects under reimbursement provisions, for financial or other extraordinary reasons, may receive grant funds under the special disbursement method by submitting unpaid invoices from project owners, and grant funds will be disbursed to borrowers and passed directly to project owners. In either case, RUS grant funds will be disbursed in accordance with the provisions of 7 CFR Part 3015, Uniform Federal Assistance Regulations, the applicable requirements of this subpart, the administrative provisions outlined in paragraph (g) of this section, and the following requirements:

(1) Only projects authorized by RUS in accordance with paragraphs (c)(1) and (e)(2) of this section, for which adequate documentation is submitted, including receipts for expenditures under the reimbursement method or unpaid invoices under the special disbursement method, as applicable, and certification of approved purposes, will be considered for disbursement;

(2) A project which was not submitted prior to grant approval in accordance with paragraph (c)(1) of this section, may be authorized for funding subsequent to grant approval. A project which is authorized for funding under this paragraph will be considered for disbursement at the first allowable time period after project authorization in accordance with paragraphs (e)(3) and (e)(4) of this section. Project authorization after grant approval is subject to the following requirements:

(i) The project meets the specific objectives for the Borrower's revolving loan program as outlined in paragraph (b)(1) of this section;

(ii) The Borrower presents evidence that the project requested for authorization can be funded prior to projects which were authorized prior to grant approval in accordance with paragraph (b)(1) of this section; and

(iii) RUS approves the project for funding in accordance with § 1703.34;

(3) Under the reimbursement method, grant funds requisitioned for individual projects in increments of less than $100,000, or less than 25 percent of the amount approved for the revolving loan fund, whichever is less, may be disbursed semi-annually. Submission periods for requisitioning grant funds on a semi-annual disbursement basis will be 14 days commencing from the 6-month anniversary date of grant approval. Grant funds under the special disbursement method will be requisitioned in accordance with the applicable provision in paragraph (e)(4) of this section;

(4) For the reimbursement method, grant funds requisitioned for individual projects in increments of $100,000 or greater, or at least 25 percent of the amount approved for the revolving loan fund, whichever is less, may be submitted for disbursement at any time. Under the special disbursement method, grant funds of less than $100,000 may be requisitioned for disbursement at any time. However, the minimum requisition will be $50,000, or the total grant award, whichever is less.

(f) *Reporting requirements.* (1) The Borrower must maintain financial management systems and retain financial records in accordance with 7 CFR part 3015, Uniform Federal Assistance Regulations.

(2) Borrower records must include an accurate accounting and source documentation to support each transaction involving the revolving loan fund. Records are subject to a rural economic loan review as set forth in § 1703.66(g).

(3) SF–269, ''Financial Status Report,'' and a revolving loan program activity report will be required of all Borrowers on an annual basis. Reports will be submitted no later than 90 days after December 31 of each year. The program activity report will contain an aggregate list of projects funded, the amount funded for each project, the project repayment schedule, a brief description of each project, the project objectives, whether or not the project has been completed, and the projected number of jobs created or saved by each project. Reports under this paragraph will be required until all grant funds have been disbursed and projects completed.

(4) A performance report will be required for each project funded on an annual basis. Performance reports will be due no later than 90 days after December 31 of each year. Performance reports will be submitted until one year after project completion. Project

performance reports will contain the following:

(i) A comparison of actual accomplishments during the reporting period to the objectives established for the project and, if not attained, reasons why established objectives were not met;

(ii) Problems, delays, or adverse conditions which will materially affect attainment of planned project objectives, prevent the meeting of time schedules or objectives, or preclude the attainment of project work elements during established time periods. This disclosure shall be accompanied by a statement of the action taken or contemplated to resolve the situation;

(iii) Projected accomplishments for the next reporting period, if applicable; and

(iv) Status of compliance with any special conditions for project funding, if applicable.

(5) Borrowers must report and remit interest earned on advances of grant funds deposited in interest accounts to RUS on a quarterly basis in accordance with 7 CFR part 3015, Uniform Federal Assistance Regulations.

(g) *Non-Federal funds.* Once all RUS-derived grant funds have been utilized by the Borrower to fund rural development projects according to the provisions of this section and the applicable provisions of this subpart, loans made by the Borrower thereafter from repayments to the revolving loan fund shall not be considered as being derived from Federal funds and the requirements of these regulations will not be imposed on the Borrower or project owners. However, the Borrower will, as a condition for receiving a grant under this section, agree to the following conditions:

(1) To maintain a revolving loan account to promote rural economic development in accordance with the Borrower's rural development plan for non-Federal funds submitted in accordance with paragraph (b) of this section;

(2) To maintain the additional funding supplied by the Borrower in accordance with paragraph (a)(5) of this section and interest earnings within the revolving loan fund;

(3) Approval may be granted by the Administrator to terminate the revolving loan program, or modify the requirements set forth in paragraphs (g)(1) and (g)(2) of this section, upon written request and justification by the Borrower. Should the Borrower terminate the revolving loan program without obtaining approval by the RUS Administrator, the Borrower will return the amount of the original grant to RUS.

(h) *Administrative provisions.* The requirements of this paragraph set forth the procedures for accounting, requisitioning and disbursement of Federal funds, those funds initially disbursed for projects which may be funded in accordance with an approved rural development plan and scope of work submitted by the Borrower. Disbursement of grant funds will be approved on a reimbursement basis after the grant agreement is executed by RUS and the Borrower, the applicable provisions of this subpart are met, subject to disbursement restrictions in paragraph (e) of this section, and the requirements in paragraphs (h) (1) through (3) of this section.

(1) *Accounting requirements.* Accounting will be performed in accordance with 7 CFR part 1767, Accounting Requirements for RUS Electric Borrowers, or 7 CFR part 1770, Accounting Requirements for RUS Telephone Borrowers, as appropriate. The Borrower will maintain accounts for the revolving funds as follows:

(i) *RUS electric Borrowers.* (A) A general ledger Account 131.13, ''Cash-General—Economic Development Grant Funds.'' The Borrower will debit this account in an amount equal to the amount of the grant received from RUS, any additional funds deemed Federal from the Borrower as required by paragraph (a)(5)(iii) of this section, and all other funds advanced for the project, regardless of the source, if controlled by the Borrower. The Borrower will credit this account for all expenditures made with Federal funds on behalf of the rural development project.

(B) A general ledger Account 124.1, ''Other Investments—Federal Economic Development Loans.'' The Borrower will debit this account in the amount of Federal funds the Borrower

advances to non-associated organizations for authorized rural economic development projects. For each debit in this account, a corresponding credit will be made in Account 131.13 in paragraph (h)(1)(i)(A) of this section. This account will be credited with repayments of loans made with Federal economic development grant funds.

(C) A general ledger Account 123.3, ''Investment in Associated Companies—Federal Economic Development Loans.'' The Borrower will debit this account in the amount of Federal funds the Borrower advances to associated organizations for authorized rural economic development projects. For each debit in this account, a corresponding credit will be made in Account 131.13 in paragraph (h)(1)(i)(A) of this section. This account will be credited with repayments of loans made with Federal economic development grant funds.

(D) Account 421, ''Miscellaneous Nonoperating Income.'' The Borrower will credit this account in the amount of grant funds disbursed by RUS resulting from an approved requisition request in accordance with paragraph (h)(2) of this section.

(E) A general ledger Account 131.14, ''Cash-General—Economic Development Non-Federal Revolving Funds.'' The Borrower will debit this account with any additional funds deemed non-Federal from the borrower as required by paragraph (a)(5)(iv) of this section, cash received from the repayment of loans made from accounts in paragraphs (h)(1)(i)(B), (h)(1)(i)(C), (h)(1)(i)(F), and (h)(1)(i)(G) of this section. The Borrower will credit this account to reflect loans made for rural economic development projects from non-Federal funds from accounts specified in paragraphs (h)(1)(i)(F) and (h)(1)(i)(G) of this section.

(F) A general ledger Account 124.2, ''Other Investments—Non-Federal Economic Development Loans.'' The Borrower will debit this account in the amount of non-Federal funds the Borrower advances to non-associated organizations for authorized rural economic development projects. For each debit in this account, a corresponding credit will be made in Account 131.14, in paragraph (h)(1)(i)(E) of this section. This account will be credited with repayments of loans made from non-Federal economic development funds.

(G) A general ledger Account 123.4, ''Investment in Associated Companies—Non-Federal Economic Development Loans.'' The Borrower will debit this account in the amount of non-Federal funds the Borrower advances to associated organizations for authorized rural economic development projects. For each debit in this account, a corresponding credit will be made in Account 131.14, in paragraph (h)(1)(i)(E) of this section. This account will be credited with repayments of loans made from non-Federal economic development funds.

(H) A general ledger Account 171 ''Interest and Dividends Receivable.'' The Borrower will debit this account with the amount of interest earned on the revolving loan fund. The Borrower will credit this account and debit the appropriate cash account when the cash is received.

(I) A general ledger Account 419, ''Interest and Dividend Income.'' The Borrower will credit this account with the amount of interest earned on the revolving loan fund.

(ii) *RUS telephone Borrowers.* (A) A general ledger Account 1130.4, ''Cash—General Fund—Economic Development Grant Funds (Class A Companies)'', or Account 1120.14, ''Cash-General Fund—Economic Development Grant Funds (Class B Companies).'' The Borrower will debit the appropriate account in an amount equal to the amount of the grant received from RUS, any additional funds deemed Federal from the Borrower required by paragraph (a)(5)(iii) of this section, and all other funds advanced for the project, regardless of the source, if controlled by the Borrower. The Borrower will credit the appropriate account for all expenditures made with Federal funds on behalf of the rural development project.

(B) A general ledger Account 1402.4, ''Other Investments in Nonaffiliated Companies—Federal Economic Development Grant Loans.'' The Borrower will debit this account in the amount of Federal funds the Borrower advances to nonaffiliated organizations for authorized rural economic development projects. For each debit in this account, a corresponding credit will be

made in the appropriate account in paragraph (h)(1)(ii)(A) of this section. This account will be credited with repayments of loans made from Federal economic development grant funds.

(C) A general ledger Account 1401.1, ''Other Investments in Affiliated Companies—Federal Economic Development Grant Loans.'' The Borrower will debit this account in the amount of Federal funds the Borrower advances to affiliated organizations for authorized rural economic development projects. For each debit in this account, a corresponding credit will be made in the appropriate account in paragraph (h)(1)(ii)(A) of this section. This account will be credited with repayments of loans made from Federal economic development grant funds.

(D) Account 7360, ''Other Non-operating Income (Class A Companies)'', or Account 7300, Non-operating Income and Expense (Class B Companies), as appropriate. The Borrower will credit these accounts, as appropriate, in the amount of grant funds disbursed by RUS resulting from an approved requisition request in accordance with paragraph (h)(2) of this section.

(E) A general ledger Account 1130.5, ''Cash—General Fund—Economic Development Non-Federal Revolving Funds (Class A Companies)'', or Account 1120.15, ''Cash—General Fund—Economic Development Non-Federal Revolving Funds (Class B Companies)'', as appropriate. The Borrower will debit the appropriate account with any additional funds deemed non-Federal from the Borrower as required by paragraph (a)(5) of this section, cash received from the repayment of loans made from accounts in paragraphs (h)(1)(ii)(B), (h)(1)(ii)(C), (h)(1)(ii)(F), and (h)(1)(ii)(G) of this section. The Borrower will credit the appropriate account to reflect loans made for rural economic development projects from non-Federal funds from accounts specified in paragraphs (h)(1)(ii)(F) and (h)(1)(ii)(G) of this section.

(F) A general ledger Account 1402.5, ''Other Investments in Nonaffiliated Companies-Non-Federal Economic Development Grant Loans.'' The Borrower will debit this account in the amount of non-Federal funds the Borrower advances to nonaffiliated organizations for authorized rural economic development projects. For each debit in this account, a corresponding credit will be made in the appropriate account in paragraph (h)(1)(ii)(E) of this section. This account will be credited with repayments of loans made from non-Federal economic development funds.

(G) A general ledger Account 1401.2, ''Other Investments in Affiliated Companies—Non-Federal Economic Development Grant Loans.'' The Borrower will debit this account in the amount of non-Federal funds the Borrower advances to affiliated organizations for authorized rural economic development projects. For each debit in this account, a corresponding credit will be made in the appropriate account in paragraph (h)(1)(ii)(E) of this section. This account will be credited with repayments of loans made from non-Federal economic development funds.

(H) A general ledger Account 1210, ''Interest and Dividends Receivable.'' The Borrower will debit this account with the amount of interest earned on the revolving fund loan. The borrower will credit this account and debit the appropriate cash account when the cash is received.

(I) A general ledger Account 7320, ''Interest Income (Class A Companies)'', or Account 7300.2, ''Interest Income (Class B Companies)'', as appropriate. The Borrower will credit this account with the amount of interest earned on the revolving fund loans.

(2) *Requisition requirements.* Grant funds may be requisitioned by RUS Borrowers in accordance with disbursement requirements in paragraph (e) of this section. Borrowers will be fully reimbursed for funds expended for approved projects funded. For each completed project, the Borrower will submit the following for reimbursement:

(i) Standard Form 270, ''Request for Advance of Reimbursement'';

(ii) Copies of cancelled checks and other verifiable source records supporting the transactions; and

(iii) Certification and evidence that the project costs to be reimbursed are for a project which has been authorized by RUS and are authorized costs for that project.

(3) *RUS review.* Requisition requests will be evaluated for compliance with loan purposes previously submitted by the Borrower for project authorization in accordance with paragraphs (c)(1) or (e)(2) of this section, compliance with the Borrower's rural development plan, accounting documentation submitted in paragraph (h)(1) of this section, and the cancelled checks and source records submitted.

[59 FR 11708, Mar. 14, 1994, as amended at 59 FR 38341, July 28, 1994; 59 FR 53931, Oct. 27, 1994]

§ 1703.23 Supplemental funds requirements for zero-interest loans and grants.

The Administrator will not select an application unless the project will receive supplemental funds in an amount at least equal to 20 percent of the RUS zero-interest loan and grant to be provided to the project, as determined by the Administrator. Supplemental funds as used in this section may come from the project owner in the form of equity funds, private sources, state and local government sources, other Federal Government sources, the borrower or other sources. Only supplemental funds that will be provided to the project after the date RUS receives the borrower's completed application may be used to satisfy this requirement. Supplemental financing must be verified and committed to the project in form and substance satisfactory to the Administrator before RUS will advance any funds.

§ 1703.24 [Reserved]

§ 1703.25 Significance of RUS financing to the total project cost.

Selection of applications will be based on a preference for applications requesting RUS financing which will be at least equal to 5 percent of the total project costs, as determined by the Administrator. Projects costs will be based on the amount that would be spent over the first 2 years after the first advance of RUS funds for the component or phase of the undertaking for which the borrower is requesting RUS funds, as determined by the Administrator. The Administrator may determine that a component or phase, especially actions necessary to initiate a larger project, constitute a distinct project for the purposes of this section.

§ 1703.26 [Reserved]

§ 1703.27 Owner's equity in the project.

The Administrator may require, as a condition to RUS financing, that the owner(s) of the project invest equity capital if determined to be financially necessary, based on an RUS financial analysis and sound lending practices.

§ 1703.28 Maximum and minimum sizes of a zero-interest loan or grant application.

(a) The maximum size of an application that will be considered for funding under this subpart during a fiscal year will be 3 percent of the projected total amount available for the zero-interest loans or grants under section 313 of the Act during that fiscal year, rounded to the nearest $10,000. This determination will be made by the Administrator for each fiscal year.

(b) Regardless of the projected total amount that will be available, the maximum size may not be lower than $200,000.

(c) The projected total amount available during a particular fiscal year is calculated as the sum of the projected amount that will be credited to the subaccount during a particular fiscal year from the interest differential calculation based on the RUS borrowers' cushion of credit levels at the time the Administrator makes the determination and any amounts appropriated for that fiscal year for zero-interest loans or grants made under section 313 of the Act.

(d) After the Administrator has determined the maximum size for a fiscal year, a notice of the calculation and amount will be published promptly in the FEDERAL REGISTER. Thereafter, the maximum size will remain in effect until the Administrator has published the maximum size for the next fiscal year.

(e) All unselected applications on file at RUS, including both loan and grant applications, from the same borrower for the same project will be considered to be one application in determining

that the maximum size of the application is in accordance with this section.

(f) The minimum size of an application for assistance under this subpart that will be considered for funding is $10,000.

[57 FR 44317, Sept. 25, 1992, as amended at 59 FR 11711, Mar. 14, 1994]

§ 1703.29 Terms of zero-interest loan repayment.

(a) The Administrator will determine the terms and repayment schedule of the zero-interest loan to the borrower based on the nature of the project and approved purposes. Ordinarily, the total term of the zero-interest loan, including any principal deferment period, will not exceed 10 years. The repayment terms the borrower sets on a pass-through-loan must equal the terms of the loan provided to the borrower unless a written request from the borrower to provide a longer deferment period, shorter total term of the loan, or other benefits is approved by the Administrator.

(b) The Administrator has the discretion to defer the repayment of principal up to two years, based on an analysis of the feasibility of the project. Ordinarily, if the Administrator considers the project to be a business expansion or going concern, the first repayment of principal will not begin until one year after the date of the RUS note. Ordinarily, if the Administrator considers the project to be a start-up project, the first repayment of principal will not begin until 2 years after the date of the RUS note. Loans must be repaid under terms set forth in RUS's legal documents.

(c) Unless the Administrator has specifically approved otherwise, the borrower will be required to repay the RUS zero-interest loan in full at such time as a pass-through-loan has been fully repaid to the borrower. If the borrower uses the proceeds of the RUS zero-interest loan to provide pass-through-loans to more than one entity, this requirement will only apply to that portion of the zero-interest loan associated with the loan that has been fully repaid to the borrower.

(d) If the Administrator determines that, as a result of state law, court rulings, or regulatory commission decisions, it is necessary to ensure that the borrower will repay the RUS zero-interest loan, the borrower may be required to provide an irrevocable letter of credit, or another form of guarantee satisfactory to the Administrator. The letter of credit or other guarantee is to be made payable to RUS. The letter of credit or other guarantee may not be secured by any assets under a RUS and/or Rural Telephone Bank mortgage and must be in form and substance satisfactory to the Administrator. RUS must receive the letter of credit or other guarantee prior to the advance of any zero-interest loan funds.

§ 1703.30 Approval of agreements.

(a) The Administrator must approve any agreements between the borrower and the owner(s) of the project, those undertaking the project, or any intermediary that will re-lend or transfer the proceeds of the RUS funds, that the Administrator deems necessary.

(b) Borrowers must obtain the Administrator's approval of any loan, grant or security agreement, mortgage or note between the borrower and the owner(s) of the project, those undertaking the project or any intermediary that will re-lend or transfer the proceeds of the RUS funds, prior to the advance of RUS zero-interest loan or grant funds to the borrower. The borrower must receive the Administrator's approval of the final draft version of the documents prior to their execution.

(c) Borrowers must obtain the Administrator's written approval prior to revising or amending any loan, grant or security agreement, mortgage or note that has been reviewed and approved by the Administrator pursuant to paragraph (b) of this section. Additionally, the borrower must obtain the Administrator's written approval prior to executing, revising or amending any other agreement, in connection with the project, between the borrower and the owner(s) of the project, those undertaking the project or any intermediary that will re-lend or transfer the proceeds of the RUS funds.

(d) The borrower and the owner(s) of the project, or those undertaking the project, should make agreements and

prepare documents in accordance with all applicable laws.

(Approved by the Office of Management and Budget under control number 0572–0090)

[57 FR 44317, Sept. 25, 1992, as amended at 59 FR 11711, Mar. 14, 1994; 59 FR 38341, July 28, 1994]

§1703.31 Transfer of employment or business.

The project must not result primarily in the transfer of any existing employment or business activity from one area to another.

§1703.32 Environmental requirements.

(a) Prospective recipients of zero-interest loans or grants should consider the potential environmental impact of their proposed projects at the earliest planning stage and plan development in a manner that reduces, to the extent practicable, the potential to affect the quality of the human environment adversely.

(b) *Application for zero-interest loans or grants for project feasibility studies.* For a proposal to fund a project feasibility study, the only environmental information normally required is whether or not the proposed project being studied or analyzed will be located within an area protected under the Coastal Barrier Resources Act (16 U.S.C. 3501 *et seq.*) Generally, the use of Federal funds to promote development on coastal barriers is strictly limited by the Coastal Barriers Resources Act.

(c) *Application for zero-interest loans or grants for a project that is not considered project feasibility studies.* (1) The Administrator will review support materials in the application and initiate an environmental review process pursuant to 7 CFR part 1794. This process will focus on any environmental concerns or problems that are associated with the project.

(2) The level and scope of the environmental review will be determined in accordance with the National Environmental Policy Act of 1969 (NEPA), as amended, (42 U.S.C. 4321 *et seq.*), the Council on Environmental Policy for Implementing the Procedural Provisions of NEPA (40 CFR parts 1500—1508), RUS's environmental policies and procedures (7 CFR part 1794) and other relevant Federal environmental laws, regulations and Executive Orders.

(3) Activity related to the project that will adversely affect the environment or limit the choice of reasonable alternatives must not be undertaken prior to completion of RUS's environmental review process.

§1703.33 Other considerations.

(a) *Equal opportunity and nondiscrimination requirements.* All zero-interest loans and grants made under this subpart are subject to the nondiscrimination provisions of title VI of the Civil Rights Act of 1964, as amended, (42 U.S.C. 1971 *et seq.*, 1975a *et seq.*, 2000a *et seq.*; 7 CFR part 15); section 504 of the Rehabilitation Act of 1973, as amended, (29 U.S.C. 701 *et seq.*; 7 CFR part 15b); the Age Discrimination Act of 1975, as amended, (42 U.S.C. 6101 *et seq.*; 45 CFR part 90); and Executive Order 11246, Equal Employment Opportunity, (3 CFR, 1964—1965 Comp., p. 339) as amended by Executive Order 11375, Amending Executive Order 11246, Relating to Equal Employment Opportunity (3 CFR, 1966—1970 Comp., p. 684).

(b) *Architectural barriers.* All facilities financed with RUS zero-interest loans or grants that are open to the public or in which physically handicapped persons may be employed or reside must be designed, constructed, and/or altered to be readily accessible to, and usable by handicapped persons. Standards for these facilities must comply with the Architectural Barriers Act of 1968, as amended, (42 U.S.C. 4151 *et seq.*) and with the Uniform Federal Accessibility Standards (UFAS), (Appendix A to 41 CFR part 101.19, subpart 101–19.6).

(c) *Flood hazard area precautions.* In accordance with 7 CFR part 1788, if the project is in an area subject to flooding, flood insurance must be provided to the extent available and required under the Flood Disaster Protection Act of 1973, as amended (42 U.S.C. 4001 *et seq.*). The insurance must cover, in addition to the buildings, any machinery, equipment, fixtures and furnishings contained in the buildings. RUS will comply with Executive Order 11988, Floodplain Management (3 CFR, 1977 Comp., p. 117), and §1794.41 of this chapter, in considering the application for the project. As set forth in §1794.41 of

this chapter, public notice is required if a project will be located in a floodplain.

(d) *Uniform relocation assistance.* Relocations in connection with this program are subject to 49 CFR part 24 as referenced by 7 CFR Part 21, Uniform Relocation Assistance and Real Property Acquisition for Federal and Federally Assisted Programs except that the provisions in Title III, Uniform Real Property Acquisition Policy, of the Uniform Relocation Assistance and Real Property Acquisition Act of 1970, as amended, (42 U.S.C. 4601–4655) (the ''Uniform Act'') do not apply to this program.

(e) *Drug-free workplace.* Grants made under this program are subject to the requirements set forth in 7 CFR part 3017, subpart F, Drug-Free Workplace Requirements, which implements the Drug-Free Workplace Act of 1988 (41 U.S.C. 701 *et seq.*). A borrower requesting a grant will be required to certify that it will establish and make a good faith effort to maintain a drug-free workplace program.

(f) *Debarment and suspension.* The requirements of Executive Order 12549, Debarment and Suspension (3 CFR, 1986 Comp., p. 189), and 7 CFR part 3017, subparts A through E, Governmentwide Debarment and Suspension (Nonprocurement), regarding debarment and suspension are applicable to this program.

(g) *Intergovernmental review of Federal programs.* (1) This program is subject to the requirements of Executive Order 12372, Intergovernmental Review of Federal Programs (3 CFR, 1982 Comp., p. 197) and 7 CFR part 3015, subpart V, Intergovernmental Review of Department of Agriculture Programs and Activities, which implements Executive Order 12372.

(2) With the exception of zero-interest loans and grants for project feasibility studies, proposed projects are subject to the state and local government review process set forth in 7 CFR part 3015. Under the review process, state and local governments have 60 days to comment on the proposed project.

(3) The Administrator will not give final approval to an application until the requirements of 7 CFR part 3015, subpart V, regarding state and local government review have been satisfied.

(h) *Restrictions on lobbying.* (1) The restrictions and requirements imposed by 31 U.S.C. 1352, entitled ''Limitation on Use of Appropriated Funds to Influence Certain Federal Contracting and Financial Transactions'' and the implementing regulation, 7 CFR part 3018, New Restrictions on Lobbying, are applicable to this program.ca 7v15.018

(2) The regulation that implements this statute requires applicants for a zero-interest loan in excess of $150,000 and applicants for a grant in excess of $100,000 to file a certification statement regarding the use of Federal appropriated funds to lobby the Executive and Legislative branches of the Federal Government, and to file a disclosure form if engaged in these activities using unappropriated funds.

(3) In addition, persons that receive contracts or subcontracts in excess of $150,000 under a zero-interest loan and persons that receive subgrants, contracts or subcontracts in excess of $100,000 under a grant are required to file certification statements regarding lobbying the Executive and Legislative branches and, if engaged in these activities, to file disclosure forms.

§ 1703.34 Applications.

(a) Borrowers may file an application on any official workday during the first 14 days of every month. A borrower must send a copy of the application, except for an application that requests a zero-interest loan or grant for project feasibility studies, to the state single point of contact for state and local governments at the same time it submits the application to RUS. As discussed in § 1703.33(g), state and local governments have 60 days to review a borrower's proposal before the Administrator gives final approval to an application, except a proposal for project feasibility studies. The Administrator may establish a special application period if determined necessary.

(b) A completed application will consist of an original and two copies of:

(1) *An application form.* The application must include a completed application form, ''Application for Federal Assistance,'' Standard Form 424;

(2) *A board resolution.* The application must include a board resolution that:

(i) Requests a zero-interest loan and/or grant, including the amount of the zero-interest loan and/or the amount of the grant rounded to the nearest 1,000 dollars;

(ii) Includes the total combined deferment and repayment period requested for a zero-interest loan if less than 10 years;

(iii) Includes the board's endorsement of the proposed rural economic development project as described in the application;

(iv) States the proposed project does not violate §§ 1703.20 and 1703.21; and discloses any information regarding a conflict of interest, potential conflict of interest, or appearance of a conflict of interest that would allow the Administrator to make an informed decision;

(v) Authorizes an official of the borrower to requisition zero-interest loan or grant funds under this program;

(vi) For an application for a grant only, authorizes the chief executive officer of the borrower to execute and deliver on behalf of the borrower the certification Form AD-1049 regarding a drug-free workplace program as required in part 3017, subpart F of this title; and

(vii) Any other matters deemed necessary by the Administrator;

(3) *Miscellaneous Federal forms.* The application must include the following completed forms:

(i) Form AD-1047, ''Certification Regarding Debarment, Suspension, and Other Responsibility Matters—Primary Covered Transactions,'' as required in part 3015, subparts A through E of this title; and

(ii) Assurance statement or certification statement required under the Uniform Act as set forth in § 1703.33(d). For pass-through-loans and pass-through-grants, the ultimate recipient of the proceeds of the RUS zero-interest loan or grant must sign the assurance statement that it will comply with the applicable provisions of the Uniform Act or sign a certification that the provisions of the Uniform Act will not apply to the rural development project which will be partially financed with the proceeds of RUS funds. If the borrower will not provide a pass-through-loan or pass-through-grant to another entity, the borrower must submit a completed assurance statement or certification regarding the applicable provisions of the Uniform Act, or have such an assurance statement on file at RUS;

(4) *Contingent certifications and disclosures.* As determined by the type and amount of requested funds, the application must include the following completed forms:

(i) For an application for a zero-interest loan in excess of $150,000 or for an application for a grant in excess of $100,000, a certification statement, ''Certification Regarding Lobbying,'' and, if the borrower is engaged in lobbying activities described under § 1703.33(h), a completed disclosure form, ''Disclosure of Lobbying Activities''; and

(ii) For an application for a grant only, a completed certification form, ''Certification Regarding Drug-Free Workplace Requirements (Grants),'' Form AD-1049 as required in part 3017, subpart F of this title;

(5) *Other requirements.* The following:

(i) A section entitled ''Selection Factors'' as set forth in § 1703.35;

(ii) A section entitled ''Project Description'' as set forth in § 1703.36;

(iii) Except for applications for project feasibility studies, a section entitled ''Environmental Impact of the Project'' as set forth in § 1703.37;

(iv) Monitoring plan. For a pass-through loan and/or grant, a copy of the Borrower's plan to monitor the loan and/or grant and ensure that the requirements of this subpart are met; and

(v) Scope of work. For an application for a loan and/or grant, a proposed scope of work for the project.

(c) The Administrator may request additional information it considers relevant from the borrower.

(d) During the application review process, the borrower may change the amount of the zero-interest loan or grant funds requested or other portions of its application, only if approved by the Administrator. A borrower that changes its request from a grant to a

zero-interest loan must submit information necessary for the Administrator to evaluate a loan proposal as set forth in this subsection, and submit a new board resolution requesting the loan.

(The information collection requirements contained in paragraph (b) of this section were approved by the Office of Management and Budget under control number 0572–0090)

[57 FR 44317, Sept. 25, 1992, as amended at 59 FR 11711, Mar. 14, 1994; 59 FR 38341, July 28, 1994]

§ 1703.35 Section of the application covering the selection factors.

The application must contain a section addressing the ''selection factors'' consisting of the following:

(a) ''Nature of the project'' (§ 1703.46(g)(1)), which includes any information considered appropriate including aspects of the project that may not be obvious to an outside observer;

(b) ''Job creation project'' (§ 1703.46(g)(2)), which includes any information that is not readily apparent concerning whether the project would directly create jobs in rural areas. The number of the jobs and the basis for the job projection should be included under ''Number of long-term jobs'';

(c) ''Long-term improvements in economic development'' (§ 1703.46(g)(3)), which addresses the extent to which the project will improve the productive potential of the labor force, industrial plant, infrastructure, natural resources and institutions by employing advanced technology, creating higher-skilled occupations, adding higher value to natural resources, creating jobs with higher-career potential, or is considered part of a knowledge intensive industry;

(d) ''Diversifying the rural economy or alleviating underemployment'' (§ 1703.46(g)(4)), which includes any information the borrower desires the Administrator to consider;

(e) ''Supplemental funds'' (§ 1703.46(h)(1)), which includes the name of each source and the respective amount of supplemental funds that was provided to the project within 6 months of submitting the application to RUS, and the amount that will be provided within two years of receiving RUS funds. Also indicate the nature and strength of the commitments to make these supplemental funds available, when these funds are expected to be disbursed, any special terms and conditions associated with the commitments, copies of the commitments, and, if established, the interest rate, term and deferment period on any loan for the project;

(f) ''Economic conditions and job creation'' (§ 1703.46(h)(2)), which includes:

(1) ''Unemployment rates'' (§ 1703.46(h)(2)(i)). List the county or counties in which the project will be located. It is not necessary to include the county, state or national unemployment rates. RUS obtains these rates from other Federal agencies;

(2) ''Per capita personal income'' (§ 1703.46(h)(2)(ii)). As with ''Unemployment rates,'' it is not necessary to include the county, state or national per capita personal income levels;

(3) ''Change in population'' (§ 1703.46(h)(2)(iii)). It is not necessary to include the county population levels;

(4) ''Number of long-term jobs'' (§ 1703.46(h)(2)(iv)). Include the number of long-term jobs that the project will directly create in rural areas and the total project cost;

(5) ''Community-based economic development program'' (§ 1703.46(h)(2)(v)). Explain if the project is part of a community-based economic development program; and

(6) ''Plan for improving the marketable skills of people in rural areas'' (§ 1703.46(h)(2)(vi)). Include information on any written plan for the project to provide opportunities or incentives to improve the marketable skills of rural residents through training and/or education. For projects that consist of providing training or education, indicate how it will benefit rural residents;

(g) ''Location'' (§ 1703.46(h)(3)), which indicates whether or not the project will be located in a town and, if so, the name of the town;

(h) ''Support for the program—cushion of credit payments'' (§ 1703.46(h)(4)), which mentions any cushion of credits payments made recently in accounts at RUS;

(i) ''Demonstration project'' (§ 1703.46(h)(5)), which includes a discussion of any commitments from the

owner(s) of the project to be a demonstration project and a copy of the written commitment;

(j) ''Probability of success'' (§1703.46(h)(6)), which includes:

(1) ''Owners and management of the project'' (§1703.46(h)(6)(i)) that discusses how the knowledge, experience, education and training of the proposed owners and management of the project increases the likelihood of long-term success; and

(2) ''Ultimate recipient's business plan'' (§1703.46(h)(6)(ii)), that references an attached copy of the business plan.

(i) The plan should include:

(A) A description of the project;

(B) A description of the business, if applicable, its products and the prospects of the industry;

(C) What will be produced or accomplished;

(D) The area to be served;

(E) Any market research or marketing plan;

(F) Any operating plan;

(G) Total project costs and projected use of funds by purpose or category;

(H) A financial plan, including a feasibility study with projected balance sheets, income statements and cash flow statements;

(I) The source of supplemental funds, the nature and strength of commitments from other sources of financing, and the equity contribution;

(J) The proposed ownership and management of the project;

(K) A description of any coordination with a local, regional or state development organization; and

(L) Other relevant information.

(ii) The scope of the plan should reflect the amount requested in the application, the risks involved with developing and operating the project, and the overall cost of the project. The plan should describe any coordination with a local, regional or state development organization.

§1703.36 Section of the application covering the project description.

In general, this section should be more detailed the larger the project for which the borrower is requesting funding. The section of the application on the ''project description'' must include:

(a) A description of the proposed project including the nature of the project, the location of the project, organizations that will be involved in the project and the primary beneficiaries of the project. Also include in this subsection a statement describing whether the borrower has or will have a direct or indirect (through a subsidiary or affiliated organization) ownership or similar beneficial interest in the facilities to be constructed or in the entity that will occupy or utilize these facilities. In addition, explain whether it seems likely that the proposed project will be undertaken or completed in the absence of an RUS zero-interest loan or grant;

(b) A separate paragraph entitled ''Uses of RUS Funds and Total Project Costs'', that includes a breakdown of the specific uses of RUS funds and a breakdown of the specific uses of all funds necessary to ensure completion of the project. Project costs should be limited to the amount to be spent over the 2-year period after receiving RUS funds;

(c) For a project that involves the establishment of a new venture, such as a rural business incubator or a similar start-up venture, a discussion of how the costs of establishing, organizing and arranging financing for the venture will be paid, how start-up costs incurred after the venture has been established will be paid, the expected sources of revenue necessary to sustain the project and revenue and expense projections for the first 3 years of the project;

(d) If the borrower will provide a pass-through-loan or pass-through-grant to another entity, outline the terms and conditions that the borrower intends to place on the recipient of the RUS funds including the security arrangements and collateral on a zero-interest loan. The discussion of proposed security arrangements and collateral should reflect the amount requested in the application, the risks involved with developing and operating the project, and the overall cost of the project;

(e) For pass-through-loans and pass-through-grants, a description of the ultimate recipient, including the form of

organization and ownership (i.e., corporation, nonprofit corporation, cooperative, partnership, sole proprietor), the owner(s) and the chief officers;

(f) If the project involves construction, a brief description of the construction necessary to make the project operational and the organization involved with the project that will be responsible for building the project facilities or having them built;

(g) A discussion of the manner in which the borrower intends to monitor the zero-interest loan and/or grant proceeds to ensure that they are used only for approved purposes; and

(h) If applicable, a discussion on any potential conflict of interest or the appearance of a conflict of interest, a clarification of any aspect of the project with respect to the restriction that it must not result primarily in the transfer of any existing employment or business activity from one area to another or a clarification of any aspect of the project with respect to limitations in §§ 1703.20 and 1703.21.

§ 1703.37 Section of the application covering the environmental impact of the project.

(a) For a proposed project that only involves internal modifications or equipment additions to buildings or other structures (for example; relocating interior walls or adding computer facilities) and/or external changes or additions to existing buildings, structures or facilities requiring physical disturbance of less than 0.4 hectare (0.99 acre), the environmental information normally required is:

(1) A copy of a flood hazard zone map from the Federal Emergency Management Agency with the location of the project site marked;

(2) A statement of whether or not the proposed project will be located within an area protected under the Coastal Barrier Resources Act (16 U.S.C. 3501 *et seq.*);

(3) A description of the internal modifications or equipment additions, and the external changes or additions to existing buildings, structures or facilities being proposed, the size of the site in hectares, and the general nature of the proposed use of the facilities once the project is completed, including any hazardous materials to be used, created or discharged, any substantial amount of air emissions, wastewater discharge, or solid waste that will be generated; and

(4) A statement of whether the project site contains or is near a property listed or eligible for listing in the National Register of Historic Places (16 U.S.C. 470).

(b) For all other proposed projects include:

(1) A copy of a flood hazard zone map from the Federal Emergency Management Agency with the location of the project site marked (42 U.S.C. 4001 *et seq.*);

(2) A diagram showing the general layout of the proposed facilities on the project site;

(3) The size of the project site in hectares;

(4) A map (preferably a U.S. Geological Survey map) of the project area indicating the boundaries of the project;

(5) A statement of whether or not the project will be located within an area protected under the Coastal Barrier Resources Act;

(6) The amount of property to be cleared, excavated, fenced or otherwise disturbed by the project;

(7) The current land use and zoning of the project site and any vegetation on the project site;

(8) A description of buildings or other major structures, including dimensions, to be constructed or modified;

(9) A statement of whether the presence of wetlands or existing agricultural operations are present at the project site (7 CFR part 1794); whether properties listed or eligible for listing in the National Register of Historic Places are on or near the project site; whether threatened or endangered species or critical habitat are on or near the project site (16 U.S.C. 1531 *et seq.*);

(10) The general nature of the proposed use of the facilities once the project is completed, including any hazardous materials to be used, created or discharged, any substantial amount of air emissions, wastewater discharge, or solid waste that will be generated (7 CFR part 1794); and

(11) A copy of any environmental review, study, assessment, report or other document that has been prepared

in connection with obtaining permits, approvals or other financing for the proposed project from state, local or other Federal agencies. Such material, to the extent relevant, may be used to fulfill the requirements of this section.

(c) The Administrator may request additional environmental information in specific cases to satisfy §1703.32.

§§1703.38—1703.44 [Reserved]

§1703.45 Review and analysis of applications.

Completed applications received at RUS by the 14th day of the month will be considered at the first selection date which occurs at least 40 days after the application was received. Completed applications received at RUS after the 14th day of a month will be either be held for the next application period or returned to the borrower, at the borrower's option. The review period of at least 40 days should allow sufficient time for state and local governments to review the proposed projects under the intergovernmental review process, as set forth in 7 CFR part 3015, and to provide sufficient time for the Administrator to fully review and analyze these applications. In the event state and local government review has not been completed, the Administrator's approval may be contingent upon the review being satisfactorily documented. The Administrator reserves the discretion to consider applications outside the normal selection period.

§1703.46 Documenting the evaluation and selection of applications for zero-interest loans and grants.

(a) The Administrator will only consider for selection applications that request funds for purposes as set forth in §§1703.17 and 1703.18 and are not ineligible under §1703.20, as determined by the Administrator. The Administrator will not consider applications that do not conform with all of the provisions of this subpart, as determined by the Administrator. The Administrator will make the determination of all numbers, dollars, levels and rates, as well as the nature, costs, location and other characteristics of the proposed project, to calculate the number of points assigned to an application for each selection factor. Applications for zero-interest loans and grants will be ranked separately. In addition, applications requesting less than 5 percent of the total project costs as provided in §1703.25 will be ranked separately, subject to §1703.46(j). The Administrator will select applications that receive the greatest number of total points under paragraphs (f) and (g) of this section, subject to available funds and the provisions of §§1703.25, 1703.46(i), and 1703.46(j).

(b) After reviewing an application, the Administrator may decline to select an application:

(1) That would result in a conflict of interest or the appearance of a conflict of interest;

(2) Based on the management and financial situation of the borrower applying for the zero-interest loan or grant. In determining the borrower's financial situation, the Administrator will consider, among other things, the borrower's existing and projected cash flows, equity to asset ratios, times interest earned ratios, debt service coverage ratios, the level of its investments, the level of its cash and other liquid assets, its working capital and repayment of its debts;

(3) Based on a determination that limitations under state laws will lessen the likelihood of repayment of the RUS zero-interest loan in the event that the borrower does not receive funds from the project necessary to cover the RUS zero-interest loan payments;

(4) Based on the unwillingness of the borrower applying for the zero-interest loan or grant to exercise diligence in repaying RUS loans or loan guarantees, and comply with RUS's legal documents and regulations;

(5) For an otherwise eligible project when any of the revenues of the project are derived from a legalized gambling activity; or

(6) For any illegal activity.

(c)(1) The Administrator will first evaluate the application and the project with respect to the three factors in this paragraph. The Administrator will not select applications requesting funds for projects that in the Administrator's best judgment have a low probability of:

(i) Being a viable business or operation;

(ii) Being successful as measured by long-term job creation or retention; and

(iii) Producing long-term economic development in rural areas.

(2) The Administrator's determination in paragraph (c) of this section will be based on the ultimate recipient's feasibility studies, income statements, cash flow statements, existing and projected balance sheets, market research, job creation potential, industry trends, and current economic conditions given the nature of the project. Long-term job creation and economic development in rural areas as used for this factor will mean jobs or economic development that would generally be expected to last at least five years.

(d) The Administrator will not award points under the selection factors in paragraphs (f) and (g) of this section for applications that:

(1) Involve the purchase land that will not be developed or used as a site for a project structure during the current phase of the project, as determined by the Administrator;

(2) Will be used for residential purposes or entertainment purposes at the residential level, such as residential dwellings and land sites, facilities to provide entertainment television, or personal, non-business related vehicle(s); however, nursing homes providing medical care, as determined by the Administrator, will not be considered to be residential dwellings;

(3) Will be used primarily to finance the purchase of an established business or operation rather than for economic development in rural areas or job creation purposes; or

(4) Will be used primarily to transfer property or real estate between owners without making any improvements or additions that will promote economic development in rural areas or job creation.

(e) After the above determinations, the Administrator will evaluate the applications and assign points with respect to the factors in paragraph (f) of this section. Applications evaluated under paragraph (f) of this section that do not receive at least 35 points or are not within the top 75 percent when all applications being assigned points are ranked from high to low by total number of points will not be evaluated with respect to the factors in paragraph (g) of this section. The only exception to this evaluation process would be the Administrator's determination that additional applications must be selected in accordance with § 1703.14. After such a determination, the remaining applications evaluated in paragraph (f) of this section will be also evaluated under the factors in paragraph (g) of this section.

(f) *Selection factors pertaining to the type of project.* The number of points assigned for each selection factor will be determined as follows:

(1) *Nature of the project.* The extent to which the nature of the project will promote economic development in rural areas and/or job creation—up to 50 points. The determination for this factor will be based on whether the project:

(i) Is considered a start-up, expansion, or enhancement of a business, a business incubator, an industrial building or park, infrastructure necessary to connect these types of projects to existing infrastructure, necessary for the development and operation of these types of projects, or, in the Administrator's determination, basic infrastructure necessary for successful businesses in the rural economy;

(ii) Will provide technical assistance to rural businesses or rural residents, train or educate rural residents, promote economic development in rural areas on a non-profit basis, or provide medical care to rural residents; and

(iii) Will succeed as envisioned in the application, and the possibility that the owners or operators may become delinquent on their loan payments.

(2) *Job creation project.* The extent to which the project will directly lead to job creation given the size of the project and the amount of RUS funds requested or the project is necessary for job creation—up to 25 points. As part of the determination, the Administrator will consider whether the project will provide long-term employment for rural residents. For industrial parks, industrial buildings, and similar projects, the Administrator will consider whether the application includes information on businesses or tenants that will occupy the building(s) and the

nature and extent of the commitments to use the buildings in determining the number of points to award. The Administrator will also consider the probability that the project will not result in job creation as envisioned in the application in terms of both the number of jobs and the duration of the jobs.

(3) *Long-term improvements in economic development.* Projects that lead directly to an increase in long-term productivity and per capita income in rural areas—up to 25 points. The Administrator's determination will be based on the extent to which the project will improve the productive potential of the labor force, industrial plant, natural resources, institutions, and infrastructure necessary for economic development and job creation by utilizing advanced technology, creating higher skilled occupations, creating jobs with higher career potential or jobs that are considered part to be of a knowledge intensive industry, or adding higher value to natural resources. In considering infrastructure projects, the Administrator will award points only for the facilities, such as water and sewer facilities, that will serve and are necessary for commercial activities described under this factor.

(4) *Diversifying the rural economy or alleviating underemployment.* Projects that in the judgement of the Administrator will diversify the rural economic base or assist in alleviating chronic underemployment for rural residents—10 points. The Administrator will assign points only to the extent the application contains convincing evidence pertaining to this factor.

(g) *Other selection factors.* The number of points assigned for each selection factor will be determined as follows:

(1) *Supplemental funds.* (i) A determination of the amount of supplemental funds provided or to be provided to the project from the project owner in the form of equity funds, private sources, state and local government sources, other Federal Government sources, the borrower or other sources of funds. The supplemental funds used in this calculation must be disbursed to the project during the period covering six months prior to the receipt of the application by RUS and two years after the first advance of RUS funds for the project. Supplemental funds must be committed to the project before RUS will advance its funds. RUS loan or grant funds from the borrower or RUS loan or grant funds from any other organization will not be included in the calculations. The Administrator will determine what constitutes expenditures on the project. If supplemental funds as a percentage of the RUS zero-interest loan and/or grant to be provided to the project is:

(A) Equal to 20%—10 points, the minimum number of points;

(B) Equal to 100%—20 points;

(C) Equal to 500%—30 points, the maximum number of points.

(ii) Ratios of supplemental funds to RUS funds falling between these levels will be assigned points based on a straight-line interpolation calculated to the nearest whole point. The result will be rounded based on the standard convention of a fraction of 1/2 or greater equals 1.

(2) *Economic conditions and job creation.* (i) A comparison will be made of the unemployment rate in the county where the project will be located to the state and national unemployment rates.

(A) If the unemployment rate in the county where the project will be located exceeds the National unemployment rate by 30 percent or more—10 points, the maximum number of points awarded.

(B) If the unemployment rate in the county where the project will be located is equal to the National unemployment rate—5 points.

(C) If the unemployment rate in the county where the project will be located is equal to or less than 75 percent of the National unemployment rate—0 points.

(D) If the unemployment rate in the county where the project will be located exceeds the state unemployment rate by 30 percent or more—8 points, the maximum number of points awarded.

(E) If the unemployment rate in the county where the project will be located is equal to the state unemployment rate—4 points.

(F) If the unemployment rate in the county where the project will be located is equal to or less than 75 percent of the state unemployment rate—0 points.

(G) For both the state and national unemployment rate calculations, rates falling between the levels will be assigned points based on straight-line interpolation calculated to the nearest whole point. The result will be rounded based on the standard convention of a fraction of 1/2 or greater equals 1. If the project will be located in several counties, the Administrator will use a simple average (mean) of the counties for the comparison. The Administrator will use the average of the most recent twelve months of unemployment rates it has obtained from the Bureau of Labor Statistics, U.S. Department of Labor or other government sources and processed into a suitable format.

(ii) A comparison will be made of the per capita personal income in the county where the project will be located to the state and national per capita personal income levels.

(A) If the per capita personal income level in the county where the project will be located is less than or equal to 90 percent of the National per capita personal income level—10 points, the maximum number of points awarded.

(B) If the per capita personal income level in the county where the project will be located is equal to the National per capita personal income level—5 points.

(C) If the per capita personal income level in the county where the project will be located exceeds the National per capita personal income level by 15 percent or more—0 points.

(D) If the per capita personal income level in the county where the project will be located is less than or equal to 90 percent of the state per capita personal income level—8 points, the maximum number of points awarded.

(E) If the per capita personal income level in the county where the project will be located is equal to the state per capita personal income level—4 points.

(F) If the per capita personal income level in the county where the project will be located exceeds the state per capita personal income level by 15 percent or more—0 points.

(G) For both the state and national per capita personal income calculations, incomes falling between the levels will be assigned points based on straight-line interpolation calculated to the nearest whole point. The result will be rounded based on the standard convention of a fraction of 1/2 or greater equals 1. If the project will be located in several counties, the Administrator will use a simple average (mean) of the counties for the comparison. The Administrator will use the most recent annual per capita personal income levels it has obtained from the Bureau of Economic Analysis, U.S. Department of Commerce or other government sources and processed into a suitable format.

(iii) A calculation will be made of the change in total population over the most recent two-year period in the county where the project will be located. The population change will be the based on the total percentage change over the two-year period calculated as follows: the population for the most recent year less the population as of two years prior to that year with the difference being divided by the population as of two years prior to the most recent year.

(A) If the percentage growth over the two-year period is negative 2.00 percent or higher negative amount (a population decline)—8 points, the maximum number of points.

(B) If the percentage growth over the two-year period is equal to zero or is positive (population increase)—0 points.

(C) Population growth percentages falling between these levels will be assigned points based on straight-line interpolation calculated to the nearest whole point. The result will be rounded based on the standard convention of a fraction of 1/2 or greater equals 1. If the project will be located in several counties, the Administrator will use a simple average (mean) of the counties for the comparison. The Administrator will use the most recent population data for all counties it has obtained from the Bureau of Economic Analysis, U.S. Department of Commerce or other government sources and processed into a suitable format. The data provide one population figure for the year.

(iv) The number of long-term jobs that the project will directly create in rural areas.

(A) For five or more direct long-term jobs per $100,000 of total project costs—15 points, the maximum number of points awarded.

(B) For two direct long-term jobs per $100,000 of total project costs—8 points.

(C) For no direct long-term jobs—0 points.

(D) Direct, long-term jobs under this factor are jobs that would generally be expected to last at least five years. Long-term jobs that would provide 6 months per year of equivalent full-time employment will be counted under this factor. Long-term jobs that would provide fewer months of employment would be given points based on the ratio of the number of months per year of employment to 12 months. Jobs of at least 20 hours per week will be counted under this factor. For construction of an industrial building, extension of water and/or sewer lines to a building, or a similar project, the Administrator will require a reasonable analysis of the number of jobs that will be created before awarding points for this factor. The Administrator reserves the right to adjust the number based on its analysis of the project, the explanation in the application of the businesses that will locate in the building(s), and any commitments from businesses to locate in the building(s). This factor will not count indirect job creation that results from an overall increase in the local economy once the project is completed. If total project costs per job falls between these levels, points will be assigned based on straight-line interpolation calculated to the nearest whole point. The result will be rounded based on the standard convention of a fraction of 1/2 or greater equals 1.

(v) Projects that are part of a local, community-based rural economic development program that would improve the local economy and enhance the well-being of rural residents—10 points. The determination will be based on information submitted by the borrower in its application and other information the Administrator considers appropriate.

(vi) Projects that have a written plan to provide opportunities or incentives to improve marketable skills for rural residents through training and/or education, or projects which consist of providing this training and/or education—5 points.

(3) *Location.* Projects that will be physically in a rural area—20 points.

(4) *Support for program—cushion of credit payments.* (i) Applications submitted by borrowers that have made cushion of credit payments as set forth in section 313 of the Act based on the following:

(A) If the borrower has $300,000 or three percent of total assets, whichever is less, in cushion of credit payments—15 points;

(B) If the borrower has $100,000 or one percent of total assets, whichever is less, in cushion of credit payments—10 points;

(C) If the borrower has at least $5,000 or 0.5 percent of total assets, whichever is less, in cushion of credit payments—5 points.

(ii) The amount of cushion of credit payments will be based on the amount at the time the Administrator evaluates the project. The calculation of a borrower's total assets will be based on RUS's most recently published Statistical Report, Rural Electric Borrowers (RUS Informational Publication 201–1) or Statistical Report, Rural Telephone Borrowers (RUS Informational Publication 300–4). These publications are available from the Rural Utilities Service, Administrative Services Division, Washington, DC 20250. If the amount of cushion of credits payments falls between these levels, points will be based on a straight-line interpolation calculated to the nearest whole point. The result will be rounded based on the standard convention of a fraction of 1/2 or greater equals 1.

(5) *Demonstration project.* If the application contains a written commitment from the owner(s) of the project that the project will be a demonstration project—5 points.

(6) *Probability of Success.* (i) The knowledge, experience, education and training of the proposed owners and management of the project—up to 10 points.

(ii) The ultimate recipient's business plan and indications that the project

will successfully result in economic development in rural areas and/or job creation—up to 40 points. The Administrator's evaluation of the success of the project will be based on indications in the application and RUS's analysis that the project will be a viable business or operation, be successful in creating or retaining long-term jobs, and be successful in producing economic development that will result in long-term benefits to rural areas. The plan should include:

(A) A description of the project;

(B) A description of the business, if applicable, its products and the prospects of the industry;

(C) What will be produced or accomplished;

(D) The area to be served;

(E) Any market research or marketing plan;

(F) Any operating plan;

(G) Total project costs and projected use of funds by purpose or category;

(H) A financial plan, including a feasibility study with projected balance sheets, income statements and cash flow statements;

(I) The source of supplemental funds, the nature and strength of commitments from other sources of financing, and the equity contribution;

(J) The proposed ownership and management of the project;

(K) A description of any coordination with a local, regional or state development organization; and

(L) Other relevant information.

(iii) The Administrator expects the ultimate recipient's business plan referenced in paragraph (g)(6)(ii) of this section to be comparable to a plan normally submitted to a bank for long-term financing. In evaluating an application for this selection factor, the Administrator will consider the probability that the project will result in long-term economic development in rural areas and/or job creation as envisioned in the application.

(iv) Quality and completeness of borrower's initial application submitted to RUS—up to 10 points. The Administrator's determination will be based on the completeness and quality of the application as measured by the additional information required from the borrower to complete the analysis. For a pass-through loan and grant, the quality of the Borrower's plan to monitor the loan and grant and assure that the requirements of this subpart and 7 CFR parts 3015 and 3016 are met will also be considered.

(7) *Special economic status.* The Administrator has the discretion to designate special economic status (up to 25 points) to applications submitted by borrowers that have documented one or more of the following four conditions in one or more county(ies) to be served by the proposed project:

(i) A designation of disaster area by the President of the United States which has been so designated within three years prior to applying to RUS;

(ii) The loss, removal, or closing of a major source or sources of employment in the last 3 years which causes an increase of 2 percentage points or more in the area's most recent unemployment rate compared with the period immediately before the dislocation;

(iii) Chronic or long-term economic deterioration, documented by one or both of the following conditions:

(A) An unemployment level equal to or greater than 1.5 times the National average unemployment percentage from 4 out of the last 5 years, starting with the most current statistics available. The applicant, when calculating recent years' unemployment percentages, should compare county statistics with the National Average unemployment for the corresponding year. Statistics on unemployment will be based on figures provided by the U.S. Bureau of Labor Statistics. However, the Administrator may, at his discretion, also consider verifiable, published State statistical data provided by the applicant in situations where county-wide statistical data is not representative of local conditions. Such statistical data must be part of a recognized database which reflects information for other areas within the State;

(B) A 15% loss of population due to out-migration over the most recent 10-year decennial census, based on the U.S. Bureau of the Census decennial data;

(iv) A designation as a Rural Empowerment Zone or Rural Enterprise Community by the Empowerment Zone Program authorized by Section 13301 of

the Omnibus Reconciliation Act of 1993, Public Law 103–66 (107 Stat. 312), 26 U.S.C. 1391–1393.

(h) *Outline of selection factors.* The selection factors contained in §§1703.46(f) and 1703.46(g) and the maximum number of points that may be assigned to each is listed below:

(1) *Nature of the project*—50 points;

(2) *Job creation project*—25 points;

(3) *Long-term improvements in economic development*—25 points;

(4) *Diversifying the rural economy or alleviating underemployment*—10 points;

(5) *Supplemental funds*—30 points;

(6) *Economic conditions and job creation:*

(i) *Unemployment rates*—18 points;

(ii) *Per capita personal income*—18 points;

(iii) *Change in population*—8 points;

(iv) *Number of long-term jobs*—15 points;

(v) *Community-based economic development program*—10 points;

(vi) *Plan for improving the marketable skills of people in rural areas*—5 points;

(7) *Location*—20 points;

(8) *Support for program*— cushion of credit payments—15 points;

(9) *Demonstration project*—5 points;

(10) *Probability of success:*

(i) *Owners and management of the project*—10 points;

(ii) *Ultimate recipient's business plan*—40 points; and

(iii) *Completeness of borrower's initial application*—10 points;

(11) *Special economic status*—25 points.

(i) Regardless of the number of points assigned to a borrower's application, the Administrator may:

(1) Limit the number of applications selected in any one state during any fiscal year to the ratio of borrowers in that state to the total number of borrowers multiplied by three, or ten percent of the total number selections that have been made during the current fiscal year, or ten, whichever is greatest. The number of borrowers will be determined as of the latest published RUS statistical reports (Statistical Report, Rural Electric Borrowers, RUS Informational Publication 201–1 and Statistical Report, Rural Telephone Borrowers, RUS Informational Publication 300–4. These publications are available from the Rural Utilities Service, Administrative Services Division, Washington, DC 20250);

(2) Limit a borrower to one selected application during any selection period;

(3) Limit the number of applications selected for a particular project;

(4) Allocate available funds between applications from electric and telephone borrowers;

(5) Select an application receiving fewer points than another application if there are insufficient funds during a particular budget period to select the higher ranked application; except that the Administrator may ask the borrower that submitted the higher ranked application if it desires to reduce the amount of its application to the amount of funds available. The reduction may require additional supplemental funds to ensure a successful project. Based on information the borrower provides, the Administrator will re-analyze the project to ensure that the project will still be feasible with reduced funding; or

(6) Select the highest ranking applications for funds to finance projects that the Administrator classifies as project feasibility studies.

(j) During each selection period, the highest ranking application from among the applications requesting less than 5 percent of the total project costs as provided in §1703.25 will be considered with the applications requesting 5 percent or more of total project costs.

(k) The Administrator reserves the right to use the region or data it considers most appropriate if ''county'' data are unavailable for a particular area.

[57 FR 44317, Sept. 25, 1992, as amended at 59 FR 11711, Mar. 14, 1994; 59 FR 38341, July 28, 1994; 59 FR 53931, Oct. 27, 1994]

§§1703.47—1703.57 [Reserved]

§1703.58 Post selection period.

(a) RUS will inform a borrower whether the Administrator has selected its application. The advance of RUS funds after the selection has occurred is contingent upon the borrower meeting any terms and conditions the Administrator determines are necessary. A borrower that submitted an

application which was not selected will be asked to inform RUS whether it desires to be reconsidered at a later date. The borrower may modify the application after it has been considered without resubmitting all the required material in an application, except if it changes the request from a grant to a zero-interest loan it must submit information necessary for the Administrator to evaluate a loan proposal as set forth in §§ 1703.35 and 1703.36 and submit a new board resolution requesting a loan. If the borrower so desires, the Administrator will consider an application for up to one year after the date RUS originally received the application. A borrower may submit new applications as often as it desires.

(b) During the period between the selection of the application and the execution of RUS's legal documents, the borrower must inform the Administrator if the project is no longer viable or the borrower no longer desires a zero-interest loan or grant for the project. Upon a determination by the Administrator to that effect, the selected application will be considered cancelled.

(c) If an application has been selected and the nature of the project changes, as determined by the Administrator, the borrower may be required to submit a new application to RUS for consideration. The selection may not be transferred to another project, as determined by the Administrator. At any time after the selection of an application, the Administrator may, upon a request from the borrower and receipt of any documentation the Administrator considers necessary, approve changes in the method of carrying out the purpose of the project as long as the overall purpose of the project remains the same, revise the amount of the zero-interest loan and/or grant, revise the loan maturity date and principal deferment period and make other adjustments. The Administrator may reduce the amount of the RUS loan or grant to reflect reductions in the amount of supplemental funds to be provided to the project. For substantial reductions in amount of supplemental funds to be provided to the project, the Administrator may require the borrower to re-apply for the RUS loan or grant funds.

(d) If state or local governments raise objections to a proposed project under the intergovernmental review process that are not resolved within three months of the Administrator's selection of the application, the Administrator may consider the selection of the application cancelled.

§ 1703.59 Final application processing and legal documents.

(a) After a borrower has submitted all information the Administrator determines is necessary for the selected application, RUS will send the necessary legal documents to the borrower to execute and return to RUS. The legal documents will include a letter of agreement and any legal documents the Administrator deems appropriate, including any loan agreements, notes, security instruments, certifications or legal opinions. The letter of agreement will, among other things, constitute the Administrator's approval of funds for the project subject to certain terms and conditions as determined by the Administrator, and include a project description, approved purposes of the zero-interest loan and/or grant, the maximum amount of zero-interest loan and/or grant, supplemental funds to be provided to the project and certain agreements or commitments the borrower proposed in its application.

(b) The Administrator has the discretion to include as an approved purpose the reimbursement of short-term financing and expenditures that were used for costs incurred on the project in accordance with § 1703.20(a)(2).

(c) If the borrower fails to submit within one month from the date of the Administrator's selection of an application all of the information that the Administrator determines to be necessary for RUS to prepare legal documents, the Administrator may consider the selection of the application cancelled.

§ 1703.60 [Reserved]

§ 1703.61 Disbursement of zero-interest loan and grant funds.

(a) RUS will disburse zero-interest loan funds to the borrower which must

disburse zero-interest loan proceeds to the project for approved purposes in accordance with the legal documents executed by the Administrator and the borrower and applicable RUS regulations. The borrower must make payments on a zero-interest loan as set forth in the legal documents executed by the Administrator and the borrower. The Borrower or project owner's share in the cost of the project must be utilized in advance of RUS zero-interest loan funds, or upon RUS approval, on a pro-rata distribution basis with loan funds during the disbursement period. The Borrower or project owner will not be permitted to provide its contribution at the end of the loan disbursement period.

(b) RUS will disburse grant funds to the borrower which must disburse grant proceeds to the project for approved purposes in accordance with the provisions of 7 CFR part 3015 and 7 CFR part 3016, as appropriate, the legal documents executed by the Administrator and the borrower, and applicable RUS regulations. Prior to the disbursement of grant funds under this subpart, the Borrower will provide evidence of fidelity bond coverage as required by 7 CFR 3015.17. The grant portion of a pass-through zero-interest loan and grant will be disbursed to the Borrower on a reimbursement basis after all other project funds have been utilized and evidence is provided that the project has been completed. Grants to Borrowers for establishment of revolving loan funds will be disbursed in accordance with §1703.22 of this subpart.

(c) If the borrower fails to satisfy all conditions, requirements, and terms prerequisite to the advance of zero-interest loan and/or grant funds as set forth in the letter of agreement or other RUS legal documents within 120 days from the date the borrower signs the letter of agreement agreeing and accepting the conditions, requirements, and terms of the RUS zero-interest loan and/or grant, or such later date as the Administrator may approve, the Administrator may rescind the zero-interest loan and/or grant commitment.

(d) During the period between the execution of RUS's legal documents and the disbursement of funds, the borrower must provide the Administrator written notification if the project is no longer viable or the borrower no longer desires a zero-interest loan or grant for the project. After RUS has received the borrower's notification, the Administrator will rescind the commitment.

(e) The borrower must return to RUS all proceeds of the zero-interest loan and/or grant, including any interest earned on the funds being returned, which have not been lent or disbursed by the borrower for approved purposes during the six months following the advance of the loan or grant funds from RUS to the borrower, or such later date as the Administrator may approve. If the project is under the control of the borrower, all proceeds of the zero-interest loan and/or grant must be returned to RUS, including any interest earned on the funds being returned, which have not been expended by the borrower for approved purposes before the first anniversary of the date of the advance of the loan or grant funds from RUS to the borrower, or such later date as the Administrator may approve. Authorization of any extension rests solely within the discretion of the Administrator.

[57 FR 44317, Sept. 25, 1992, as amended at 59 FR 11712, Mar. 14, 1994]

§§1703.62—1703.65 [Reserved]

§1703.66 Review and other requirements.

(a) RUS will review borrowers receiving zero-interest loans or grants, as necessary, to ensure that funds are expended for approved purposes. Borrowers receiving zero-interest loans or grants must monitor the project to the extent necessary to ensure that the project is in compliance with all applicable regulations, including ensuring that funds are expended for approved purposes. The borrower is responsible for ensuring that disbursements and expenditures of funds are properly supported with certifications, invoices, contracts, bills of sale, or any other forms of evidence determined appropriate by the Administrator and that such supporting material is available, at the borrower's premises, for review

by the RUS field accountant, borrower's certified public accountant, the Office of Inspector General, the General Accounting Office and any other accountant conducting an audit of the borrower's financial statements or this rural economic development program. Borrowers will be required to permit RUS to inspect and copy its records and documents that pertain to the project.

(b) The Borrower must require the recipient of a pass-through loan and grant to provide an itemized list to the Borrower that shows the expenditures made on the project for approved purposes, including a certification to that effect. The Borrower will also require the recipient to attach invoices, receipts, bills of sale, and other evidence representing the items on the list of expenditures that at least total the amount of the RUS zero-interest loan and grant. In addition, the Borrower will also require the recipient to furnish a record of itemized receipts showing total project costs in such detail that will permit auditors to establish the RUS funding percentage. RUS's legal agreements will include the terms and conditions that the Borrower must require in its agreement with the recipient of a pass-through loan and grant covering the use and intended schedule of expenditures of the loan funds.

(c) RUS's legal documents may require the borrower to include in its legal documents with the recipient of a pass-through loan or a pass-through-grant the requirement to expend the funds for approved purposes by a certain date specified in RUS's legal documents or return to the borrower all funds that have not been expended by such date. The borrower must promptly return to RUS all unexpended funds that the recipient returns to the borrower under the terms set forth in the legal documents executed between the Administrator and the borrower. The borrower may request an extension due to delays in the project. Authorization of any extension rests solely within the discretion of the Administrator.

(d) The legal documents executed between the Borrower and the Administrator in connection with a zero-interest loan and/or grant must contain certain provisions giving the Administrator discretionary rights and remedies in the event a Borrower fails to comply with this subpart, other Federal regulations and statutes, or the terms, conditions and requirements of the executed legal documents. Regardless of any right or remedy the Administrator chooses to assert, if the Borrower uses any zero-interest loan and/or grant funds other than for approved purposes, the Borrower will be required to return to RUS the amount used for unapproved purposes. An unauthorized zero-interest loan amount which is returned will be considered a prepayment on the RUS note.

(e) Borrowers receiving zero-interest loans and/or grants will be subject to a rural economic development review of zero-interest loan and grant funds.

(f) The borrower must promptly notify the Administrator in writing if another entity is in default on a pass-through-loan between the borrower and the entity.

(g) Grants provided under this program will be administered in accordance with 7 CFR part 3015 and 7 CFR part 3016, as appropriate. Copies of these USDA Uniform Assistance regulations can be obtained by contacting RUS in Washington, DC. A Borrower that receives a grant for the establishment of a revolving loan fund, or project owner that receives a pass-through loan and grant, will be subject to requirements under these regulations which cover, among other things, financial reporting, accounting records, budget controls, record retention and audit requirements. For pass-through loans and grants, RUS Borrowers will be required to include in their legal documents the requirement for project owners to provide sufficient financial, accounting and budget information and other records deemed necessary to facilitate audits in accordance with 7 CFR part 3015 and 7 CFR part 3016 for non-profit entities, and RUS rural economic development loan reviews for projects in a for-profit status.

(h) For pass-through loans and grants awarded under this subpart, the Borrower must diligently monitor performance to ensure that time schedules are being met, projected work by time

periods is being accomplished, and other performance objectives are being achieved. The Borrower must submit an original and one copy of each report to RUS on an annual basis. The project performance reports shall include, but not be limited to, the following:

(1) A comparison of actual accomplishments to the objectives established for that period;

(2) Reasons why any established objectives were not met;

(3) A description of any problems, delays, or adverse conditions which have occurred, or are anticipated, and which may affect the attainment of overall project objectives, prevent meeting of time schedules or objectives, or preclude the attainment of particular project work elements during established time periods. This disclosure shall be accompanied by a statement of the action taken or planned to resolve the situation; and

(4) Objectives and timetable established for the next reporting period.

(i) For pass-through loans and grants, a final project performance report will be required with the last SF 269, ''Financial Status Report,'' available from RUS in Washington, DC. The final report also must provide an evaluation of the success of the project in meeting the objectives of the program. The final report may serve as the last annual report.

(j) Monitoring requirements for Borrowers receiving grants for revolving loan funds are specified in §1703.22.

[57 FR 44317, Sept. 25, 1992, as amended at 59 FR 11712, Mar. 14, 1994]

§1703.67 Changes in project objective or scope.

For loans and grants awarded under this subpart, the Borrower must obtain prior approval for any material change to the scope or objectives of the approved project, including changes to the scope of work or budget. Failure to obtain prior approval of changes can result in suspension or termination of grant funds.

[59 FR 11712, Mar. 14, 1994]

§1703.68 Loan and grant termination provisions.

(a) *Termination for cause.* The Administrator may terminate any loan and/or grant in whole, or in part, at any time before the date of completion of loan and/or grant disbursement, whenever the Borrower has failed to comply with the conditions of the loan and/or grant. The Administrator will promptly notify the Borrower in writing of the determination and the reasons for the termination, together with the effective date. The termination date will be no less than 30 days following receipt of the termination notice. The Borrower will have such time to cure the default, or to state why it feels the loan and/or grant should not be terminated. The Administrator will stay the termination upon the curing of the default, and may delay termination if, sufficient cause has been given by the Borrower.

(b) *Termination for convenience.* The Administrator or the Borrower may terminate a loan and/or grant in whole, or in part, when both parties agree that the continuation of the project would not produce beneficial results commensurate with further expenditure of funds. The two parties will agree upon termination conditions, including the effective date, and in the case of partial terminations, the portion to be terminated. The Borrower will not incur new obligations for the terminated portion after the effective date, and will cancel as many outstanding obligations as possible. The Administrator will allow full credit to the Borrower for the Federal share of unfulfilled contractual obligations which were incurred in good faith by the Borrower prior to grant termination.

[59 FR 11712, Mar. 14, 1994]

§§ 1703.69—1703.79 [Reserved]

Subpart C—Rural Business Incubator Program [Reserved]

§§ 1703.80—1703.99 [Reserved]

Subpart D—Distance Learning and Telemedicine Loan and Grant Program

SOURCE: 62 FR 32437, June 13, 1997, unless otherwise noted.

§ 1703.100 Purpose.

The purpose of this subpart is to encourage and improve telemedicine services and distance learning services in rural areas through the use of telecommunications, computer networks, and related advanced technologies by students, teachers, medical professionals, and rural residents.

§ 1703.101 Policy.

(a) RUS recognizes that the transmission of information is vital to the economic development, education, and health of rural Americans. To further this objective, RUS will award loans and grants under this subpart to distance learning and telemedicine projects that will improve the access of people residing in rural areas to improved educational, learning, training, and health care services. Unless a distinction is made in the various sections of this subpart, all aspects of this subpart will apply to all requests for financial assistance.

(b) In providing assistance under this subpart, RUS will give priority to rural areas that it believes have the greatest need of distance learning and telemedicine services. RUS believes that generally the need is greatest in economically challenged areas and those requiring high costs to serve. This program is consistent with provisions of the 1996 Telecommunications Act (Public Law 104–104, 110 Stat. 56) that designates telecommunications service discounts for schools, libraries, and rural health care providers providing benefits to rural end-users. RUS will take into consideration the community's involvement in the project and the applicant's ability to leverage grant funds based on its access to capital.

(c) RUS believes that the residents of rural areas and their local institutions which serve them can best determine what are the most appropriate communications or information systems for use in their respective communities. Therefore, in administering this subpart, RUS will not favor or mandate the use of one particular technology over another.

(d) All rural institutions are encouraged to cooperate with each other and with applicants and end users in promoting the program being implemented under this subpart.

(e) RUS staff will make diligent efforts to inform potential applicants in rural areas of the program being implemented under this subpart.

(f) Financial assistance under this subpart will consist of grants or cost of money loans, or both. The Administrator shall determine the portion of the financial assistance provided to a recipient that consists of grants and the portion that consists of cost of money loans so as to result in the maximum feasible repayment to the government of the financial assistance, based on the ability of the recipient to repay and with the full utilization of funds made available to carry out this subpart.

(g) The Administrator may provide a cost of money loan to entities using telemedicine and distance learning services, and, to entities providing or proposing to provide telemedicine service or distance learning service to other persons at rates calculated to ensure that the benefit of the financial assistance is passed through to the other persons.

(h) The Administrator may provide a cost of money loan under this subpart to a borrower of a telecommunications or electric loan under the Rural Electrification Act of 1936, as amended. A borrower receiving a cost of money loan under this subpart shall:

(1) Make the funds provided available, under any terms it so chooses as long as the terms are no more stringent than the terms under which it received the financial assistance, to entities that qualify as distance learning

or telemedicine projects satisfying the requirements of this subpart.

(2) Use the funds provided to acquire, install, improve, or extend a system referred to in this subpart.

§1703.102 Definitions.

Act means the Rural Electrification Act of 1936, as amended (7 U.S.C. 901 *et seq.*).

Administrator means the Administrator of the Rural Utilities Service, or designee or successor.

Applicant means an eligible organization which applies for financial assistance under this subpart.

Champion Community means any community that submitted a valid application to become an Empowerment Zone/Enterprise Community (EZ/EC) area, met the requirements to be designated an EZ/EC area, but was not chosen because their score was not high enough to be selected.

Completed application means an application that includes all those items specified in §1703.109 in form and substance satisfactory to the Administrator.

Comprehensive rural telecommunications plan means the plan submitted by an applicant in accordance with §1703.109(a).

Computer networks means computer hardware and software, terminals, signal conversion equipment including both modulators and demodulators, or related devices, used to communicate with other computers to process and exchange data through a telecommunication network in which signals are generated, modified, or prepared for transmission, or received, via telecommunications terminal equipment and telecommunications transmission facilities.

Consortium means a combination or group of eligible entities formed to undertake the purposes for which the distance learning and telemedicine financial assistance is provided. Each consortium shall be composed of a minimum of two eligible organizations that meet the requirements of §1703.103.

Construct means to acquire, construct, extend, improve, or install a facility or system.

Cost of money loan means a loan made under the DLT program bearing interest at a rate equal to the then current cost of money to the government, at the time the feasibility study is completed, for loans of similar maturity not to exceed 10 years.

Data terminal equipment means equipment that converts user information into data signals for transmission, or reconverts the received data signals into user information, and is normally found on the terminal of a circuit and on the premises of the end user.

Distance learning means a telecommunications link to an end user through the use of eligible equipment to:

(1) Provide educational programs, instruction, or information originating in one area, whether rural or not, to students and teachers who are located in rural areas; or

(2) Connect teachers and students, located in one rural area with teachers and students that are located in a different rural area.

DLT borrower means an entity that has outstanding loans under the provisions of the DLT program.

DLT program means the Distance Learning and Telemedicine Loan and Grant Program administered by RUS pursuant to subtitle D, chapter 1, of the Rural Economic Development Act of 1990, as amended (7 U.S.C. 950aaa through 950aaa–4).

Economic useful life as applied to facilities financed under the DLT program means the number of years resulting from dividing 100 percent by the depreciation rate (expressed as a percent) based on Internal Revenue Service depreciation rules or recognized telecommunications industry guidelines.

Eligible equipment means computer hardware and software, audio and visual equipment, computer network components, telecommunications terminal equipment, telecommunications transmission facilities, data terminal equipment, inside wiring, interactive video equipment, or other facilities that would further telemedicine services or distance learning services. Land, buildings, or building construction are not considered eligible equipment (see §1703.107(a)(10)).

Eligible organization means an incorporated entity that meets the requirements of § 1703.103.

Empowerment Zone and Enterprise Community (EZ/EC) means any community whose designation as such pursuant to 26 U.S.C. 1391 *et seq.* is in effect at the time RUS agrees to provide financial assistance.

End user means either or both of the following:

(1) Rural elementary or secondary schools or other educational institutions, such as institutions of higher education, vocational and adult training and education centers, libraries, and teacher training centers, and students, teachers and instructors using such rural educational facilities, that participate in a rural distance learning telecommunications program through a project funded under this subpart;

(2) Rural hospitals, primary care centers or facilities, such as medical centers and clinics, and physicians and staff using such rural medical facilities, that participate in a rural telemedicine program through a project funded under this subpart.

End user site means a facility that is part of a network or telecommunications system that is utilized by end users.

Financial assistance shall consist of grants, cost of money loans, or both, made under the DLT program.

Grant documents means the letter of agreement, including any amendments and supplements thereto, between RUS and the grant recipient.

Grantee means a recipient of a grant from RUS to carry out the purposes of the DLT program.

Hub means control center of a network or telecommunications system.

Instructional programming means educational material, including computer software, which would be used for educational purposes in connection with eligible equipment but does not include salaries, benefits, and overhead of medical or educational personnel.

Interactive video equipment means equipment used to produce and prepare for transmission audio and visual signals from at least two distant locations such that individuals at such locations can orally and visually communicate with each other. Such equipment includes monitors, other display devices, cameras or other recording devices, audio pickup devices, and other related equipment.

Letter of agreement means a legal document executed by RUS and the grantee that contains specific terms, conditions, requirements, and understandings applicable to a particular grant.

Loan documents mean the loan agreement, note, and security agreement, including any amendments and supplements thereto, between RUS and the DLT or Telecommunications/Electric borrower.

Local exchange carrier means a commercial, cooperative or mutual-type association, or public body that is engaged in the provision of telephone exchange service or exchange access.

Matching funds means the applicant's funding contribution for allowable purposes.

National School Lunch Program (NSLP) means the federally assisted meal program established under the National School Lunch Act of 1946 (42 U.S.C. 1751).

Project means an undertaking to provide or improve distance learning or telemedicine by using financial assistance provided under the DLT program.

Project service area means the area in which at least 90 percent of the persons to be served by the project are likely to reside.

Rural community facilities means facilities such as schools, libraries, learning centers, training facilities, hospitals, medical centers, or similar facilities, primarily used by residents of rural areas, that will use a telecommunications, computer network, or related advanced technology system to provide educational or health care benefits primarily to residents of rural areas.

RUS means the Rural Utilities Service, an agency of the United States Department of Agriculture formerly known as REA, *see* 7 CFR 1700.1.

Scope of work means a detailed plan of work that has been approved by the Administrator to be performed by the applicant using financial assistance provided under this subpart.

Secretary means the Secretary of Agriculture.

Technical assistance means:

(1) Assistance in learning to operate equipment or systems; and

(2) Studies, analyses, designs, reports, manuals, guides, literature, or other forms of creating, acquiring, or disseminating information.

Telecommunications carrier means any provider of telecommunications services.

Telecommunications/Electric borrower means an entity that has outstanding electric or telecommunications RUS or Rural Telephone Bank loans or loan guarantees under the provisions of the Act.

Telecommunications terminal equipment means the assembly of telecommunications equipment at the end of a circuit or path of a signal, including but not limited to over the air broadcast, satellite, and microwave, normally located on the premises of the end user, that interfaces with telecommunications transmission facilities, and that is used to modify, convert, encode, or otherwise prepare signals to be transmitted via such telecommunications facilities, or that is used to modify, reconvert, or carry signals received from such facilities, the purpose of which is to accomplish the goal for which the circuit or signal was established.

Telecommunications transmission facilities means facilities that transmit, receive, or carry data between the telecommunications terminal equipment at each end of the telecommunications circuit or path. Such facilities include microwave antennae, relay stations and towers, other telecommunications antennae, fiber-optic cables and repeaters, coaxial cables, communication satellite ground station complexes, copper cable electronic equipment associated with telecommunications transmissions, and similar items.

Telemedicine means a telecommunications link to an end user through the use of eligible equipment which electronically links medical professionals at separate sites in order to exchange health care information in audio, video, graphic, or other format for the purpose of providing improved health care services primarily to residents of rural areas.

§1703.103 Applicant eligibility and allocation of funds.

(a) To be eligible to receive financial assistance under this subpart, the applicant must be organized in one of the following corporate structures:

(1) An incorporated organization, partnership, Indian tribe and tribal organization as defined in 25 U.S.C. 450b (b) and (c), or other legal entity, including a municipal corporation or a private corporation organized on a for-profit or not-for-profit basis, which operates, or will operate, a school, college, university, learning center, training facility, or other educational institution, including a regional educational laboratory, library, hospital, medical center, medical clinic or any rural community facility. A state government, other than a state government entity that operates a rural community facility, is not considered an eligible applicant; or

(2) A consortium, as defined in §1703.102. A consortium which includes a state government entity is only eligible if the state government entity operates a rural community facility; or

(3) An incorporated organization, partnership, Indian tribe and tribal organization as defined in 25 U.S.C. 450b (b) and (c), or other legal entity which is providing or proposes to provide telemedicine service or distance learning service to other legal entities or consortia at rates calculated to ensure that the economic value and other benefits of the distance learning or telemedicine grant is passed through to such other legal entities or consortia.

(b) At least one of the entities in a partnership or consortium must be eligible individually, and the partnership or consortium must provide written evidence of its legal capacity to contract with RUS. If a partnership or consortium lacks the capacity to contract, each individual entity must contract with RUS on its own behalf.

(c) A borrower of an electric or telecommunications loan under the Act is eligible for a cost of money loan only.

(d) All applications for financial assistance, with the exception of applications requesting a loan and having the minimum required score, will be ranked by the type of application (health care or educational) and total

points scored. Grant funds available for medical and educational applicants will be allocated based on the total number of medical and educational applications scoring in the top 50 percent of all applications received for that fiscal year. Applications will be ranked only in one category based on the predominant use of the project.

§ 1703.104 Allowable grant and loan funding percentage.

(a) Financial assistance, except as noted in paragraph (b) of this section, may be used by eligible organizations for distance learning and telemedicine projects to finance up to 70 percent of the cost of allowable purposes outlined in § 1703.105 provided that no financial assistance may exceed the maximum grant or loan amount for the year in which the grant or loan is made.

(b) Cost of money loans requested by an applicant may be used by eligible organizations for distance learning and telemedicine projects to finance up to 90 percent of the cost of allowable loan purposes outlined in § 1703.105, provided that no loan may exceed the maximum loan amount for the year in which the loan is made. Financial assistance applications that do not request a loan and qualify for a loan or combination loan and grant will be funded up to 70 percent of the cost of allowable purposes.

§ 1703.105 Grant and loan purposes.

Grants and loans shall be limited to costs associated with the initial capital assets associated with the project. Grant and loan funds as set out in the last sentence of this section shall not exceed twenty percent (20 percent) of the requested financial assistance. The following are allowable grant and loan purposes:

(a) Acquiring, by lease or purchase, eligible equipment as defined in § 1703.102;

(b) Acquiring instructional programming; and

(c) Providing technical assistance and instruction for using eligible equipment, including any related software; developing instructional programming; providing engineering or environmental studies relating to the establishment or expansion of the phase of the project that is being financed with the financial assistance.

§ 1703.106 In-kind matching provisions.

(a) In-kind matching, the applicant's minimum funding contribution (specified in § 1703.104) for allowable purposes, is generally required in the form of cash. However, in-kind contributions for the purposes listed in § 1703.105 may be substituted for cash.

(b) In-kind items listed in § 1703.105 must be non-depreciated or new assets with established monetary value. Manufacturers or service providers discounts are not considered in-kind matching.

(c) Financial assistance may be provided for end user sites. Financial assistance may also be provided for hubs located in rural or non-rural areas, if they are necessary to provide distance learning or telemedicine services to rural residents at end user sites.

§ 1703.107 Ineligible loan and grant purposes.

(a) Without limitation, financial assistance under this subpart will not be provided:

(1) To cover the costs of installing or constructing telecommunications transmission facilities, except as provided in paragraph (c) of this section;

(2) To pay for medical equipment except medical equipment primarily used for encoding and decoding data, such as images, for transmission over a telecommunications or computer network;

(3) To pay salaries, wages, or employee benefits to medical or educational personnel;

(4) To pay for the salaries or administrative expenses of the applicant or the project;

(5) To purchase equipment that will be owned by the local exchange carrier or another telecommunications service provider;

(6) To duplicate facilities providing distance learning or telemedicine services in place or to reimburse the applicant or others for costs incurred prior to RUS' receipt of the completed application;

(7) To pay costs of preparing the application package for financial assistance under this program;

(8) For projects whose sole objective is to provide links between teachers and students or medical professionals who are located at the same facility;

(9) For site development and the destruction or alteration of buildings;

(10) For the purchase of land, buildings, or building construction;

(11) For projects located in areas covered by the Coastal Barrier Resources Act (16 U.S.C. 3501 *et seq.*);

(12) For any purpose that the Administrator has not specifically approved; or

(13) Except for leases provided in §1703.105, to pay the cost of recurring or operating expenses for the project.

(b) Except as otherwise provided in §1703.140, funds shall not be used to finance a project in part when success of the project is dependent upon the receipt of additional financial assistance under this subpart D or is dependent upon the receipt of other funding that is not assured.

(c) Loans can be used to cover the costs of telecommunications transmission facilities if no telecommunications carrier will install such facilities under the Act or through other financing procedures within a reasonable time period and at a cost to the applicant that does not jeopardize the feasibility of the project, as determined by the Administrator.

§1703.108 Maximum and minimum sizes of a grant and a loan.

Applications for grants and loans to be considered under this subpart will be subject to limitations on the proposed amount of financial assistance. The Administrator may establish the maximum amount of financial assistance to be made available to an individual recipient for each fiscal year under this subpart, by publishing notice of the maximum amount in the FEDERAL REGISTER not more than 45 days after funds are made available for the fiscal year to carry out this subpart. The minimum size of a grant or loan is $50,000.

§1703.109 The application for financial assistance.

The following items comprise the required material that must be submitted to RUS in support of the application for financial assistance:

(a) *Proposed scope of work of the project.* The proposed scope of work of the project which includes, at a minimum:

(1) The specific activities to be performed under the project;

(2) Who will carry out the activities;

(3) The time-frames for accomplishing the project objectives and activities; and

(4) A budget for capital expenditures reflecting the line item costs for both the grant and loan funds and other sources of funds for the project.

(b) *Executive summary for the project.* The applicant must provide RUS a general project overview, verification of compliance with the general requirements of this subpart, and documentation of eligibility. The executive summary shall contain the following 9 categories:

(1) A description of why the project is needed.

(2) An explanation of how the applicant will address the need cited in paragraph (b)(1) of this section, why the applicant requires financial assistance and types of educational or medical services to be offered by the project, and the benefits to the rural residents.

(3) A description of the applicant, documenting eligibility with §1703.103.

(4) An explanation of the total cost of the project including a breakdown of the RUS financial assistance required and the source of funding for the remainder of the project.

(5) A statement that the project is either a distance learning or telemedicine facility as defined in §1703.102. If the project provides both distance learning and telemedicine services, the applicant must identify the predominant use of the system.

(6) A general overview of the telecommunications system to be developed, including the types of equipment, technologies, and facilities used.

(7) A description of the participating hubs and end user sites and the number of rural residents which will be served by the proposed project at each end user site.

(8) The applicant must certify that facilities using financial assistance do

not duplicate adequate established telemedicine services or distance learning services. RUS will make the final determination whether or not financial assistance requested by an applicant will duplicate such adequate established services.

(9) A listing of the location of each end user site (city, town, village, borough or rural area plus the state) discussing how the appropriate National School Lunch Program eligibility percentage was determined in accordance with § 1703.112. These percentages may be obtained from the State or local organization that administers the program and must be certified by that organization as being correct.

(c) *Financial information.* The applicant must provide financial information to support the need for the financial assistance requested for the project. It must show its financial capacity to carry out the proposed work, and show project feasibility. For educational institutions participating in a project application (including all members of a consortium), the financial data must reflect revenue and expense reports and balance sheet reports, reflecting net worth, for the most recent annual reporting period preceding the date of the application. For medical institutions participating in a project application (including all members of a consortium), the financial data must include income statement and balance sheet reports, reflecting net worth, for the most recent completed fiscal year preceding the date of the application. When the applicant is a partnership, company, corporation or other entity, current balance sheets, reflecting net worth, are needed from each of the entities that has at least a 20 percent interest in such partnership, company, corporation or other entity. When the applicant is a consortium, a current balance sheet, reflecting net worth, is needed from each member of the consortium and from each of the entities that has at least a 20 percent interest in such member of the consortium.

(1) Applicants must include sufficient pro-forma financial data which adequately reflects the financial capability of project participants and the project as a whole to continue a sustainable project for a minimum of 10 years after completion of the project. This documentation should include sources of sufficient income or revenues to pay operating expenses including telecommunications access and toll charges, system maintenance, salaries, training, and any other general operating expenses, and provide for replacement of depreciable items.

(2) For applicants requesting a loan and applicants who qualify for a loan or a combination loan/grant in accordance with § 1703.112, the documentation must demonstrate the ability to repay the loan. RUS will consider a secured loan guarantee by a third party as evidence of the ability of the applicant to repay a loan.

(3) For each hub and end user site, the applicant must identify and provide reasonable evidence of each source of revenue. If the projection relies on cost sharing arrangements among hub and end user sites, the applicant must provide evidence of agreements made among project participants.

(4) For applicants eligible under § 1703.103(a)(3), an explanation of the economic analysis justifying the rate structure to ensure that the benefit, including cost saving, of the financial assistance is passed through to the other persons receiving telemedicine or distance learning services.

(5) For RUS telecommunications and electric borrowers applying for a cost of money loan, the only financial information required in support of that application is the respective most recent Annual Report to RUS (i.e. RUS Form 479, Form 7, or Form 12).

(d) *A statement of experience.* The applicant must provide a written narrative (not exceeding three single spaced pages) describing its demonstrated capability and experience, if any, in operating an educational or health care endeavor and any project similar to the proposed project. Experience in a similar project is desirable but not required.

(e) *Funding commitment from other sources.* The applicant must provide evidence, in form and substance satisfactory to the Administrator, that all funds in addition to funds provided under this subpart are committed and will be used for the proposed project.

(f) *Telecommunications System Plan.* A Telecommunications System Plan, consisting of the following, is required. The items in paragraphs (f) (4) and (5) of this section are needed only when the applicant is requesting loan funds for telecommunications transmission facilities:

(1) The capabilities of the telecommunications terminal equipment, including a description of the specific equipment which will be used to deliver the proposed service. The applicant must document discussions with various technical sources which could include consultants, engineers, product vendors, or internal technical experts, provide detailed cost estimates for operating and maintaining the end user equipment and provide evidence that alternative equipment and technologies were evaluated.

(2) A listing of the proposed purchases or leases of telecommunications terminal equipment, telecommunications transmission facilities, data terminal equipment, interactive video equipment, computer hardware and software systems, and components that process data for transmission via telecommunications, computer network components, communication satellite ground station equipment, or any other elements of the telecommunications system designed to further the purposes of this subpart, that the applicant intends to build or fund using RUS financial assistance.

(3) A description of the consultations with the appropriate telecommunications carriers (including other interexchange carriers, cable television operators, enhanced service providers, providers of satellite services and telecommunications equipment manufacturers and distributors) and the anticipated role of such providers in the proposed telecommunications system.

(4) Results of discussion with local exchange carriers serving the project area addressing concerns in § 1703.107 (c).

(5) The capabilities of the telecommunications transmission facilities, including bandwidth, networking topology, switching, multiplexing, standards and protocols for intra-networking and open systems architecture (the ability to effectively communicate with other networks). In addition, the applicant must explain the manner in which the transmission facilities will deliver the proposed services. For example, for medical diagnostics, the applicant might indicate whether or not a guest or other diagnosticians can join the network from locations off the network. For educational services, indicate whether or not all hub and end-user sites are able to simultaneously hear in real-time and see each other or the instructional material in real-time. The applicant must include detailed cost estimates for operating and maintaining the network, and include evidence that alternative delivery methods and systems were evaluated.

(g) *Proposed evaluation methodology.* The applicant must provide a proposed method of evaluating the success of the project in meeting the objectives of the program as set forth in § 1703.100 and § 1703.101 and the proposed scope of work.

(h) *Compliance with other Federal statutes and regulations.* The applicant is required to submit evidence that it is in compliance with other applicable Federal requirements including, but not limited to the following:

(1) Equal opportunity and nondiscrimination requirements;

(2) Architectural barriers;

(3) Flood hazard area precautions;

(4) Uniform Relocation Assistance and Real Property Acquisition for Federal and Federally Assisted Programs;

(5) Drug-free workplace;

(6) ''Certification Regarding Debarment, Suspension and Other Responsibility Matters—Primary Covered Transaction'' (See 7 CFR 3017.510);

(7) Intergovernmental review of Federal programs if clearing house(s) exists for the state(s) in which project is located; and

(8) Restrictions on lobbying. For an application for financial assistance in excess of $100,000, a certification statement, ''Certification Regarding Lobbying'' is required. If the applicant is engaged in lobbying activities, the applicant must submit a completed disclosure form, ''Disclosure of Lobbying Activities'' (see 7 CFR part 3018).

(i)(1) *Environmental impact and historic preservation.* The applicant must provide details of the project's impact on

the environment and historic preservation. Grants and loans made under this part are subject to 7 CFR part 1794 which contains the policies and procedures of RUS for implementing a variety of Federal statues, regulations and executive orders generally pertaining to protection of the quality of the human environment that are listed in 7 CFR 1794.1. The application shall contain a separate section entitled ''Environmental Impact of the Project.''

(2) *Environmental information.* An ''Environmental Questionnaire,'' appendix A to this subpart, may be used by applicants to assist in complying with the requirements of this section. Copies of the Environmental Questionnaire are available from RUS.

(j) A completed Standard Form 424, ''Application for Federal Assistance,'' along with a board of directors resolution authorizing the request for financial assistance.

(k) Evidence of the applicant's legal existence and authority to enter into a grant or loan agreement with RUS and perform activities proposed under the grant or loan application.

(l) Evidence that the applicant is not delinquent on any obligation owed to the government (7 CFR parts 3016 and 3019).

(m) Evidence that the applicant has consulted with the USDA State Director, Rural Development, concerning the availability of other sources of funding available at the state or local level.

(n) Evidence from the USDA State Director, Rural Development, that the application conforms with the State strategic plan as prepared under section 381D of the Consolidated Farm and Rural Development Act (7 U.S.C. 1921 *et seq.*). The applicant should indicate if such a plan does not exist.

(o) *A depreciation schedule covering all assets of the project.* Those assets for which financial assistance is being requested should be clearly indicated.

(p) *Supplemental information.* The applicant should provide any additional information it considers relevant to the project and likely to be helpful in determining the extent to which the proposed project would further the purposes of this subpart.

(q) *Additional information requested by RUS.* The applicant must provide any additional information the Administrator may consider relevant to the application and necessary to adequately evaluate the application. RUS may also request modifications or changes, including changes in the amount of funds requested, in any proposal described in an application submitted under this subpart.

§ 1703.110 Conflict of interest.

At any time prior to the disbursement of a grant or loan awarded under this subpart, the Administrator may disqualify an otherwise eligible project whenever, in the judgment of the Administrator, the project would create a conflict of interest or the appearance of a conflict of interest. RUS will notify the applicant in writing of the Administrator's intention to disqualify the project under this section and set forth the basis for the Administrator's determination that a conflict of interest or appearance exists. Thereafter, the applicant will have 30 days from the date of such notice to file a written response with the Administrator. If the Administrator receives the applicant's response within the 30-day period, the Administrator will consider the information contained therein before making a final determination whether to disqualify the project. RUS will promptly notify the applicant of the final determination whether a conflict of interest or appearance of a conflict exists. If the determination is affirmative, the notice will also advise the applicant whether the project is disqualified or conditionally disqualified. If the project is conditionally disqualified, the notice will state under what circumstances the project may continue to be eligible for assistance under this subpart. The Administrator's decision under this section will be final.

§ 1703.111 [Reserved]

§ 1703.112 Determination of types of financial assistance.

(a) To maximize the use of available funding and to obtain the maximum repayment to the government, RUS will determine if an applicant will be awarded a grant, loan or a combination

of both loans and grants based upon the following:

(1) The percentage of students eligible to participate in the National School Lunch Program in the areas where the end user sites comprising the project are located; and

(2) The applicant's ability to pay for the project. Financial assistance in the form of grants or a combination of loans and grants will be made available only to those otherwise eligible applicants determined by the Administrator, after review of the financial information furnished by the applicant, to have the least ability to repay the full amount of assistance provided.

(b) The methodology contained in this section will be used to evaluate the relative financial need of the applicant, community, and project. All applicants are required to provide the applicable percentage of students eligible to participate in the National School Lunch Program for each end user site which must be certified as being correct by the appropriate State or local organization administering the program. The type of financial assistance will be determined as follows:

(1) If the end user site(s) for the project have, or are located in school districts which have, from 0–32 percent student eligibility in the National School Lunch Program, the project qualifies for a loan.

(2) If the end user site(s) for the project have, or are located in school districts which have, from 33–60 percent student eligibility in the National School Lunch Program, the project qualifies for a loan and may be eligible for some grant funds.

(3) If the end user site(s) for the project have, or are located in school districts which have, from 61–100 percent student eligibility in the National School Lunch Program, the project qualifies for a grant. The applicant may indicate its desire to be considered for a loan or a combination loan and grant if denied a grant provided the financial data required in §1703.109(c) indicates the ability to repay a loan. Grant applicants should indicate if they desire to be considered for a loan.

(4) Percentage ratios will be rounded up to the next highest or rounded down to the next lowest whole number for fraction of percentages at or greater than .5 or less than .5, respectively.

(c) The following guidelines will be used to determine the applicable National School Lunch Program eligibility percent for a particular end user site:

(1) Public schools or nonprofit private schools of high school grade or under will use the actual eligibility percentage for that particular school.

(2) Schools and institutions of higher learning ineligible to participate in the National School Lunch Program and non-school end user sites (medical facilities, libraries, etc.) will use the eligibility percentage of all students in the school district where the end user will be located.

(d) If all the end user sites in a proposed network or system fall within the same percentile category, the project will be eligible for the type of financial assistance set forth in paragraph (b) of this section.

(e) If end user sites fall within different percentile categories the eligibility percentages associated with each end user site will be averaged to determine the percentile category and type of financial assistance the applicant is eligible for. For purposes of averaging, if a hub is also utilized as an end user site, the hub will be considered as an end user site.

(f) For those applicants which qualify for a combination loan/grant, the Administrator will determine the amount of the grant the applicant will receive, if any, based upon analysis of the financial condition of the applicant as reflected by the information submitted under §1703.109(c). The minimum amount of a grant will be $5,000.

(g) RUS will submit a letter to those applicants being offered financial assistance in the form of a loan, or a combination of a loan and grant, outlining terms and conditions of such assistance. The applicant will have 15 days from the date of the letter to accept the terms and conditions in the letter. If the applicant fails to respond within this time the Administrator may withdraw the offer of financial assistance and the applicant will have no right to appeal the withdrawal.

§ 1703.113 Application filing dates, location, processing, and public notification.

(a) Applications for financial assistance under this subpart shall be submitted to the Rural Utilities Service, U.S. Department of Agriculture, 1400 Independence Avenue, SW., STOP 1590, Washington, DC 20250–1590. Applications should be marked ''Attention: Assistant Administrator, Telecommunications Program''.

(b) Applications for loans can be submitted at any time. RUS will review each application for completeness in accordance with § 1703.109, and notify the applicant, within 15 working days of the receipt of the application, of the results of this review, citing any information which is incomplete. To be considered for loan funds during the fiscal year (FY) that the application is submitted, the applicant must submit any information needed to complete the application by June 30. If this review concludes that a loan is feasible and the application receives the required minimum number of points as determined using the scoring criteria in § 1703.117, the Administrator will immediately process the application. The minimum number of points required for a loan application to be immediately processed will be published in the FEDERAL REGISTER each fiscal year.

(c) Applications requesting grant funds must be submitted to RUS to arrive not later than August 12, 1997 if the applications are to be considered during FY 1997. Beyond FY 1997, all applications requesting grant funds must be submitted to RUS to arrive not later than April 30 if the applications are to be considered during the fiscal year the application is submitted. It is suggested that applications be submitted prior to the above deadline to ensure they can be reviewed and considered complete by the deadline. RUS will review each application for completeness in accordance with § 1703.109, and notify the applicant, within 15 working days of the receipt of the application, of the results of this review, citing any information which is incomplete. To be considered for grant funds, the applicant must submit the information to complete the application by August 12, 1997 in FY 97 and April 30 beyond FY 97. If the applicant fails to submit such information by the appropriate deadline, the application will be considered during the next fiscal year.

(d) The Administrator will publish, at the end of each fiscal year, a notice in the FEDERAL REGISTER of all completed applications receiving financial assistance under this subpart. The Administrator will also make those applications available for public inspection at the U.S. Department of Agriculture, 1400 Independence Avenue, SW., Washington, DC. For purposes of this paragraph, applications include any information not protected by the Privacy Act of 1974, 5 U.S.C. 552a, and any other information that has not been designated as proprietary information by the applicant.

(e) All applicants must submit an original and two copies of a completed application. A grant applicant must also submit a copy of the application to the State government point of contact, if one has been designated for the state, at the same time it submits an application to RUS. All applications must include the information described in § 1703.109.

§§ 1703.114—1703.116 [Reserved]

§ 1703.117 Criteria for scoring applications.

(a) *Criteria*. The criteria in this section will be used by RUS to score applications that have been determined to be in compliance with the requirements of this subpart. Applicants shall address the following criteria:

(1) The need for services and benefits derived from services;

(2) The comparative rurality of the proposed project service area;

(3) The ability to leverage resources;

(4) Innovativeness of design;

(5) Connectivity with outside networks;

(6) The cost effectiveness of the design;

(7) Project participation in EZ/EC (Empowerment Zone and Enterprise Communities); and

(8) Project participation in Champion communities.

(b) *Scoring criteria*—(1) *The need for services and benefits derived from services.* (i) This criterion will be used by RUS

to score applications based on the documentation submitted in support of the application for financial assistance that reflects the need for services and benefits derived from the services proposed by the project. Up to 45 points can be assigned to this criterion.

(ii) RUS will consider the extent of the applicant's documentation explaining the economic, education or health care challenges facing the community; the applicants proposed plan to address these challenges; how the financial assistance can help; and why the applicant cannot complete the project without a loan or grant. The Administrator will also consider any support by recognized experts in the related educational or health care field, any documentation substantiating the educational or health care underserved nature of the applicant's proposed service area, and any justification for specific educational or medical services which are needed and will provide direct benefits to rural residents. Some examples of benefits to be provided by the project include, but are not limited to:

(A) Improved education opportunities for a specified number of students;

(B) Travel time and money saved by telemedicine diagnosis;

(C) Number of doctors retained in rural areas;

(D) Number of additional students electing to attend higher education institutions;

(E) Lives saved due to prompt medical diagnosis and treatment;

(F) New education courses offered, including college level courses;

(G) Expanded use of educational facilities such as night training;

(H) Number of patients receiving telemedicine diagnosis;

(I) Provision of training, information resources, library assets, adult education, lifetime learning, community use of technology, jobs, connection to region, nation, and world.

(iii) That rural residents, and other beneficiaries, desire the educational or medical services to be provided by the project (a strong indication of need is the willingness of local end users or institutions to pay, to the extent possible, for proposed services).

(iv) The project's development and support based on input from the local residents and institutions.

(v) The extent to which the application is consistent with the State strategic plan prepared by the Rural Development State Director of the United States Department of Agriculture.

(2) *The comparative rurality of the proposed project service area.* (i) The methodology contained in this section is used to evaluate the relative rurality (i.e. population) of service areas for various projects. Under this system, the end user sites and hubs (as defined in §1703.102) contained within the proposed project service area are identified. Then, those locations are given a score according to the population of the area where the end user sites are located. Up to 35 points can be assigned to this criterion.

(ii) The following definitions are used in the evaluation of rurality:

(A) *Exceptionally Rural Area* means any area of the United States not included within the boundaries of any incorporated or unincorporated city, village, or borough having a population in excess of 5,000 inhabitants.

(B) *Rural Area* means any area of the United States included within the boundaries of any incorporated or unincorporated city, village, or borough having a population over 5,000 and not in excess of 10,000 inhabitants.

(C) *Urban Area* means any area of the United States included within the boundaries of any incorporated or unincorporated city, village, or borough having a population in excess of 10,000 inhabitants.

(iii) The applicant will receive points as follows:

(A) There are a total of 35 possible points for this criterion. The maximum number of points each end user site can receive is determined by dividing the total possible points for this criterion, 35, by the total number of end user sites. If a hub is utilized as an end user site, the hub will be considered as an end user site.

(B) If the end user site is located in an Exceptionally Rural Area, it will receive the maximum number of points each end user site can receive. If the end user site is located in a Mid-Rural Area, it will receive 50 percent of the

maximum number of points each end user site can receive. If the end user site is located in an Urban Area, it will receive 0 percent of the maximum number of points each end user site can receive.

(C) The total points for each end user site will be added to reach a final point total for the project.

(D) An application must receive a minimum of 18 points under this criterion to be eligible for any financial assistance.

(3) *The ability to leverage resources.* (i) This section is used to evaluate the ability of the applicant to contribute financially to the project and to secure other non-Federal sources of funding. Documentation submitted in support of the application for financial assistance should reflect any additional financial support for the project from non-Federal sources above the applicant's required percent matching of the RUS financial assistance as set forth in § 1703.104. The applicant must include evidence from authorized representatives of the sources that the funds are available and will be used for the proposed project—up to 35 points.

(ii) The applicant will receive points as follows:

(A) Matching for allowable financial assistance purposes greater than 30 percent, but less than or equal to 50 percent of the RUS financial assistance—10 points.

(B) Matching for allowable financial assistance purposes greater than 50 percent, but less than or equal to 100 percent of the RUS financial assistance—20 points.

(C) Matching for allowable financial assistance purposes greater than 100 percent, but less than or equal to 150 percent of the RUS financial assistance—25 points.

(D) Matching for allowable financial assistance purposes greater than 150 percent, but less than or equal to 200 percent of the RUS financial assistance—30 points.

(E) Matching for allowable financial assistance purposes greater than 200 percent of the RUS financial assistance—35 points.

(4) *Innovativeness of project.* This criterion will be used by RUS to score applications based on the documentation submitted in support of the application for financial assistance that reflects the innovative nature of the project. The applicant should explain the extent to which, if any, the project is an innovative approach to either delivering or using telecommunications to address the needs of the community, and how the project differs in approach from the typical educational or health care application of technology. Up to 20 points can be assigned to this criterion.

(5) *Connectivity with outside networks.* (i) This criterion will be used by RUS to score applications based on the documentation submitted in support of the application for financial assistance that reflects the extent to which the proposed project can be connected to other educational or health care networks. Up to 20 points can be assigned to this criterion.

(ii) Consideration will be given to the extent that the proposed project will interconnect with other existing networks at the regional, statewide, national or international levels. RUS believes that to the extent possible, educational and health care networks should be designed to connect to the widest practicable number of other networks that expand the capabilities of the proposed project, thereby affording rural residents opportunities that may not be available at the local level. The ability to connect to the internet alone can not be used as the sole basis to fulfill this criteria.

(iii) Consideration will also be given to the extent that facilities constructed with federal financial assistance, particularly financial assistance under this chapter provided to entities other than the applicant, will be utilized to extend or enhance the benefits of the proposed project.

(6) *Cost effective design.* (i) This criterion will be used by RUS to score applications based on the documentation submitted in support of the application for financial assistance that reflects the cost efficiency of the project design. Up to 15 points can be assigned to this criterion.

(ii) Consideration will be given to the extent that the proposed technology or technologies for delivering the proposed educational or health care services for the project service area are the

most cost effective for the project proposed. The application must contain information necessary for RUS to use accepted analytical and financial methodologies to determine whether the applicant is proposing the most cost-effective option. RUS will consider the applicant's documentation comparing various systems and technologies, whether the applicant's system is the most cost-effective system, and whether buying or leasing specific equipment is more cost effective. Points will be deducted from the scores of the applications that fail to utilize existing telecommunications facilities that could provide the transmission path for the needed services.

(7) *Project participation in EZ/ECs.* This criterion will be used by RUS to score applications based on the documentation submitted in support of the application for financial assistance that reflects the designation of Empowerment Zones and Enterprise Communities (EZ/EC) included as beneficiaries of the proposed project. Ten (10) points will be assigned if at least one end user site is located in an EZ/EC.

(8) *Project participation in Champion Communities.* This criterion will be used by RUS to score applications based on the documentation submitted in support of the application for financial assistance that reflects the designation of Champion Communities included as beneficiaries of the proposed project. Five (5) points will be assigned if at least one end user site is located in a Champion Community.

§1703.118 Other application selection provisions.

(a) *Selection.* Applications will be selected for financial assistance based on scores, availability of funds, and the provisions of this section. RUS will make determinations regarding the reasonableness of all numbers; dollar levels; rates; the nature and design of the project; cost; location; and other characteristics of the application and the proposed project to determine the number of points assigned to a grant application for all selection criteria. Joint applications submitted by multiple applicants as set forth in §1703.113 will be rated as a single application.

(b) Regardless of the number of points an application receives in accordance with §1703.117 or the feasibility of the proposed project, the Administrator may, based on a review of the applications in accordance with the requirements of this subpart:

(1) Limit the number of applications selected for projects located in any one state during a fiscal year;

(2) Limit the number of selected applications for a particular project;

(3) Select an application receiving fewer points than another higher scoring application if there are insufficient funds during a particular funding period to select the higher scoring application; provided, however, the Administrator may ask the applicant of the higher scoring application if it desires to reduce the amount of its application to the amount of funds available if, notwithstanding the lower grant amount, the Administrator determines the project is financially feasible in accordance with §1703.109(d)(1) at the lower amount;

(4) Award a grant to an applicant whose application carries out the priorities listed in the scoring criteria in such a way to make the application unique; or

(5) Award a grant to an applicant which would normally qualify for other financial assistance, if the project achieves one or more of the following:

(i) Utilitizes cutting edge technology to provide a solution to a unique problem;

(ii) Provides services otherwise not possible in an extremely isolated geographic area; or

(iii) Provides inordinate quantifiable benefit to rural communities relative to the amount of financial assistance requested.

(c) RUS will not approve an application if RUS determines that:

(1) The applicant's proposal does not indicate financial feasibility or is not sustainable in accordance with the requirements of §1703.109(d)(1);

(2) The applicant's proposal indicates technical flaws, which, in the opinion of RUS, would prevent successful implementation, operation, or sustainability of the proposed project; or

(3) Any other aspect of the applicant's proposal fails to adequately address any requirements of this subpart or contains inadequacies which would, in the opinion of RUS, undermine the ability of the project to meet the general purpose of this subpart or comply with policies of the DLT program set forth in § 1703.101.

(d) RUS may reduce the amount of the applicant's grant award based on insufficient program funding for the fiscal year in which the project is reviewed, and offer the applicant loan funds in addition to the grant funds, if RUS determines that, notwithstanding a lower grant award, the project will show financial feasibility in accordance with § 1703.109(d)(1), and continues to meet all other provisions of this subpart. RUS will discuss its findings informally with the applicant and make every effort to reach a mutually acceptable agreement with the applicant. Any discussions with the applicant and agreements made with regard to a reduced grant amount will be confirmed in writing, and these actions shall be deemed to have met the notification requirements set forth in paragraph (e) of this section.

(e) RUS will provide the applicant an explanation of any determinations made with regard to paragraphs (c)(1) through (c)(3) of this section prior to making final project selections for the year. The applicant will be provided 15 days from the date of RUS' letter to respond, provide clarification, or make any adjustments or corrections to the project. If, in the opinion of the Administrator, the applicant fails to adequately respond to any determinations or other findings made by the Administrator, the project will not be funded, and the applicant will be notified of this determination. If the applicant does not agree with this finding an appeal may be filed in accordance with § 1703.119.

§ 1703.119 Appeal provisions.

All qualifying applications under this subpart will be scored based on criteria in section § 1703.117. A determination will be made by RUS based on the highest ranking applications and the amount of funds available for grants and loans. All applicants will be notified in writing of the score each application receives, and included in this notification will be a tentative minimum required score to receive financial assistance. If the score received by the applicant could result in the denial of its application, or if its score, while apparently sufficient to qualify for financial assistance, may be surpassed by the score awarded to a competing application after appeal, the applicant may appeal its numerical scoring. Any appeal must be based on inaccurate scoring of the application by RUS and no new information or data that was not included in the original application will be considered. The appeal must be made in writing within 10 days after the applicant is notified of the scoring results. Appeals shall be submitted to the Administrator, Rural Utilities Service, U.S. Department of Agriculture, 1400 Independence Ave., SW., STOP 1590, Washington, DC 20250–1590. Thereafter, the Administrator will review the original scoring to determine whether to sustain, reverse or modify the original scoring determination. Final determinations will be made after consideration of all appeals. The Administrator's determination will be final. A copy of the Administrator's decision will be furnished promptly to the applicant. An appeal based solely upon the type of financial assistance the applicant qualifies for will not be considered.

§§ 1703.120—1703.121 [Reserved]

§ 1703.122 Further processing of selected applications.

(a) During the period between the submission of the application and the execution of implementing documents, the applicant must inform RUS if the project is no longer viable or the applicant no longer desires financial assistance for the project. If the applicant so informs RUS, the selection will be rescinded and written notice to that effect shall be sent promptly to the applicant.

(b) If an application has been selected and the nature of the project changes, the applicant may be required to submit a new application to RUS for consideration depending on the degree of

change. A new application will be subject to review in accordance with this subpart. The selection may not be transferred to another project.

(c) If state or local governments raise objections to a proposed project under the intergovernmental review process that are not resolved within 3 months of the Administrator's selection of the application, the Administrator may rescind the selection and written notice to that effect will be sent promptly to the applicant.

(d) Recipients of financial assistance will be required to submit RUS Form 479–A, ''Distance Learning and Telemedicine Technical Questionnaire.''

(e) After an applicant selected for financial assistance has submitted such additional information, if any, RUS determines is necessary for completing the financial assistance documents, RUS will send the documents to the applicant to execute and return to RUS.

(1) The financial assistance documents will include, among other things, a letter of agreement for grants; loan documents, including third party guarantees, for loans; or any other legal documents the Administrator deems appropriate, including suggested forms of certifications and legal opinions.

(2) The letter of agreement and the loan documents will include, among other things, conditions on the release or advance of funds and include at a minimum, a project description, approved purposes, the maximum amount of the financial assistance, supplemental funds, required of the project and certain agreements or commitments the applicant may have proposed in its application. In addition, the loan documents may contain covenants and conditions the Administrator deems necessary or desirable to provide assurance that the loan will be repaid and the purposes of the loan will be accomplished.

(3) The recipient of a loan will be required to execute a security instrument in form and substance satisfactory to RUS.

(4) DLT borrowers must, before receiving any advances of loan funds, provide security that is adequate, in the opinion of RUS, to assure repayment, within the time agreed, of all loans to the borrower under the DLT program. This assurance will generally be provided by a first lien upon all of the borrower's assets or such portion thereof as shall be satisfactory to RUS. RUS may consider the projected revenues from the facilities subject to the lien.

(5) Security may also be provided by third-party guarantees, letters of credit, pledges of revenue or other forms of security satisfactory to RUS.

(6) The security instrument and other loan documents required by RUS in connection with loans under the DLT program shall contain such pledges, covenants, and other provisions as may, in the opinion of RUS, be necessary or desirable to secure repayment of the loan.

(7) If the facilities financed do not constitute a complete operating system, the DLT borrower shall provide evidence demonstrating, to RUS' satisfaction, that the borrower has sufficient contractual or other arrangements to assure that the facilities financed will provide adequate and efficient service.

(f) Until the letter of agreement or loan documents have been executed and delivered by RUS and by the applicant, RUS reserves the right to require any changes in the project or legal documents covering the project to protect the integrity of the program and the interests of the government.

(g) If the applicant fails to submit, within 120 calendar days from the date of RUS' selection of an application, all of the information that RUS determines to be necessary to prepare legal documents and satisfy other requirements of this subpart, RUS may rescind the selection of the application and written notice of such rescission will be sent promptly to the applicant.

§§1703.123—1703.125 [Reserved]

§1703.126 Disbursement of loan and grant funds.

(a) For financial assistance of $100,000 or greater, prior to the disbursement of funds, the recipient, if it is not a unit of government, will provide evidence of fidelity bond coverage as required by 7 CFR part 3019.

(b) Financial assistance will be disbursed to recipients on a reimbursement basis, or with unpaid invoices for the eligible purposes set forth in this subpart, by the following process:

(1) An SF 270, ''Request for Advance or Reimbursement,'' will be completed by the recipient and submitted to RUS not more frequently than once a month;

(2) After receipt of a properly completed SF 270, RUS will review for accuracy and if the form is satisfactory will schedule payment. Payment will ordinarily be made within 30 days; and

(3) For financial assistance approved during and subsequent to FY 1997, funds will be advanced in accordance to 7 CFR 1744.69.

(c) The recipient's share in the cost of the project will be disbursed in advance of financial assistance, or if the recipient agrees, on a pro rata distribution basis with financial assistance during the disbursement period. Recipient will not be permitted to provide its contribution at the end of the project.

(d) Concurrent grant and loan funds will be disbursed on a pro rata distribution basis.

§ 1703.127 Reporting and oversight requirements.

(a) A project performance activity report will be required of all recipients on an annual basis until the project is complete and the funds are disbursed by the applicant.

(b) A final project performance report will be required. It must provide an evaluation of the success of the project in meeting the objectives of the program. The final report may serve as the last annual report.

(c) RUS will monitor recipients as it determines necessary to assure that projects are completed in accordance with the approved scope of work and that funds are expended for approved purposes.

(d) Recipients shall diligently monitor performance to ensure that time schedules are being met, projected work by time periods is being accomplished, and other performance objectives are being achieved. Recipients are to submit an original and one copy of all reports submitted to RUS. The project performance reports shall include, but not be limited to, the following:

(1) A comparison of actual accomplishments to the objectives established for that period;

(2) A description of any problems, delays, or adverse conditions which have occurred, or are anticipated, and which may affect the attainment of overall project objectives, prevent the meeting of time schedules or objectives, or preclude the attainment of particular project work elements during established time periods. This disclosure shall be accompanied by a statement of the action taken or planned to resolve the situation; and

(3) Objectives and timetable established for the next reporting period.

§ 1703.128 Audit requirements.

(a) The grant recipients and DLT borrowers will provide an audit report in accordance with either:

(1) 7 CFR part 3051, Audits of Institutions of Higher Education and Other Nonprofit Institutions, or its successor; or

(2) 7 CFR part 1773, Policy on Audits of RUS Borrowers.

(b) 7 CFR part 3051 applies to not-for-profit organizations (including hospitals, colleges and universities) and state, local, and Indian tribal governments. 7 CFR part 1773 applies to for-profit organizations receiving grants or loans, and all RUS telecommunications and electric borrowers receiving cost of money loans.

(c) For grant recipients the audit requirements only apply to the year(s) in which grant funds are expended. For DLT borrowers the audit requirements apply until the loan is repaid.

§ 1703.129 Repayment of loans.

The term of cost of money loans will be based on the economic useful life of the facilities to be financed, not to exceed 10 years. If the recipient requests, a one year deferment of principal will be included. In special hardship cases, which the recipient must justify, RUS may approve a two year deferment of principal. Interest on the loan will be due and payable during the principal deferral period. RUS will establish uniform debt service payments based on the total amortization period.

§§ 1703.130—1703.134 [Reserved]

§ 1703.135 Grant and loan administration.

(a) RUS will review recipients as necessary to determine whether funds were expended for approved purposes. The recipient is responsible for ensuring that the project complies with all applicable regulations, and that the financial assistance is expended only for approved purposes. The recipient is responsible for ensuring that disbursements and expenditures of funds are properly supported by invoices, contracts, bills of sale, canceled checks, or other appropriate forms of evidence, and that such supporting material is provided to RUS, upon request, and is otherwise made available, at the recipient's premises, for review by the RUS representatives, the recipient's certified public accountant, the office of Inspector General, U.S. Department of Agriculture, the General Accounting Office and any other officials conducting an audit of the recipient's financial statements or records, and program performance for the financial assistance awarded under this subpart. The recipient will be required to permit RUS to inspect and copy any records and documents that pertain to the project.

(b) Grants provided under this program will be administered under, and are subject to 7 CFR parts 3016 through 3019 or their successor, as appropriate. 7 CFR parts 3016 and 3019 subject grantees to a number of requirements which cover, among other things, financial reporting, accounting records, budget controls, record retention and audits, bonding and insurance, cash depositories for grant funds, grant related income, use and disposition of real property and equipment purchased with grant funds, procurement standards, allowable costs for grant related activities, and grant close-out procedures.

§ 1703.136 Changes in project objectives or scope.

The recipient will obtain prior approval for any material change to the scope or objectives of the approved project, including changes to the scope of work or budget. Failure to obtain prior approval of changes may result in suspension or termination of funds.

§ 1703.137 Grant and loan termination provisions.

(a) *Termination for cause.* RUS may terminate any financial assistance in whole, or in part, at any time before the date of completion of funding disbursement, whenever it is determined that the recipient has failed to comply with the conditions of the financial assistance. RUS will promptly notify the recipient in writing of the determination and the reasons for the termination, together with the effective date.

(b) *Termination for convenience.* RUS or the recipient may terminate financial assistance in whole, or in part, when both parties agree that the continuation of the project would not produce beneficial results commensurate with further expenditure of funds. The two parties will agree upon termination conditions, including the effective date, and in the case of partial termination's, the portion to be terminated. The recipient will not incur new obligations for the terminated portion after the effective date, and will cancel as many outstanding obligations as possible. RUS will allow full credit to the applicant for the Federal share of the noncancelable obligations, properly incurred by the recipient prior to termination.

§§ 1703.138—1703.139 [Reserved]

§ 1703.140 Expedited telecommunications loans.

General. RUS will expedite consideration and determination of an application for a loan or a request for advance of funds submitted by an RUS telecommunications borrower that supports the project seeking financial assistance under this subpart. See 7 CFR part 1737 for loans and 7 CFR part 1744 for advances under this section.

APPENDIX A TO SUBPART D TO PART 1703—ENVIRONMENTAL QUESTIONNAIRE

NOTE: It is extremely important to respond to all questions completely to ensure expeditious processing of the Distance Learning and Telemedicine application. The information herein is required by Federal law.

IMPORTANT: Any activity related to the project that may adversely affect the environment or limit the choice of reasonable development alternatives shall not be undertaken prior to the completion of Rural Utilities Service's environmental review process.

Legal Name of Applicant _____

Signature

(Type/Sign/Date) _____

The applicant's representative certifies, to the best of his/her knowledge and belief, that the information contained herein is accurate. Any false information may result in disqualification for consideration of the loan or grant or rescission of the loan or grant.

I. Project Description—Detailing construction, including, but not limited to, internal modifications of existing structures, and installation of telecommunications transmission facilities (defined in 7 CFR 1703.102), including satellite uplinks or downlinks, microwave transmission towers, and cabling.

1. Describe the portion of the project, and site locations (including legal ownership of real property), involving internal modifications, or equipment additions to buildings or other structures (e.g., relocating interior walls or adding computer facilities) for each site.

2. Describe the portion of the project, and site locations (including legal ownership or real property), involving construction of transmission facilities, including cabling, microwave towers, satellite dishes; or, disturbance of property of .99 acres or greater for each project site.

3. Describe the nature of the proposed use of the facilities, and whether any hazardous materials, air emissions, wastewater discharge or solid waste will result.

4. State whether or not any project site(s) contain or are near properties listed or eligible for listing in the National Register of Historic Places, and identify any historic properties (The applicant must supply evidence that the State Historic Preservation Officer (SHPO) has cleared development regarding any historical properties).

5. Provide information whether or not any facility(ies) or site(s) are located in a 100-year floodplain. A National Flood Insurance Map should be included reflecting the location of the project site(s).

II. For projects which involve construction of transmission facilities, including cabling, microwave towers, satellite dishes, or physical disturbance of real property of .99 acres or greater, the following information must be submitted (7 CFR 1703.109(i)(3)).

1. A map (preferably a U.S. Geological Survey map) of the area for each site affected by construction (include as an attachment).

2. A description of the amount of property to be cleared, excavated, fenced or otherwise disturbed by the project and a description of the current land use and zoning and any vegetation for each project site affected by construction.

3. A description of buildings or other structures (i.e., transmission facilities), including dimensions, to be constructed or modified.

4. A description of the presence of wetlands or existing agricultural operations and threatened or endangered species or critical habitats on or near the project site(s) affected by construction.

5. Describe any actions taken to mitigate any environmental impacts resulting from the proposed project (use attachment if necessary).

NOTE: The applicant may submit a copy of any environmental review, study, assessment, report or other document that has been prepared in connection with obtaining permits, approvals or other financing for the proposed project from State, local or other Federal bodies. Such material, to the extent relevant, may be used to meet the requirements herein.

Subpart E—Deferments of RUS Loan Payments for Rural Development Projects

SOURCE: 58 FR 21639, Apr. 23, 1993, unless otherwise noted.

§ 1703.300 Purpose.

This subpart E sets forth RUS's policies and procedures for making loan deferments of principal and interest payments on direct loans or insured loans made for electric or telephone purposes, but not for loans made for rural economic development purposes, in accordance with subsection (b) of section 12 of the RE Act. Loan deferments are provided for the purpose of promoting rural development opportunities.

§ 1703.301 Policy.

It is RUS's policy to encourage borrowers to invest in and promote rural development and rural job creation projects that are based on sound economic and financial analyses. Borrowers are encouraged to use this program to promote economic, business and community development projects that will benefit rural areas.

§1703.302 Definitions and rules of construction.

(a) *Definitions.* For the purpose of this subpart, the following terms will have the following meanings:1

Administrator means the Administrator of RUS.

Borrower means any organization which has an outstanding direct loan or insured loan made by RUS for the provision of electric or telephone service.

Cushion of credit payment means a voluntary unscheduled payment on an RUS note made after October 1, 1987, credited to the cushion of credit account of a borrower.

Deferment means a re-amortization of a payment of principal and/or interest on an RUS direct loan or insured loan for over either a 5- or 10 year period, with the first payment beginning on the date of the deferment.

Direct loan means a loan that is made by the Administrator pursuant to section 4 or section 201 of the RE Act (7 U.S.C. 901 *et seq.*) for the provision of electric or telephone service in rural areas and does not include a loan made to promote economic development in rural areas.

Financially distressed borrower means an RUS-financed borrower determined by the Administrator to be either:

(i) In default or near default on interest or principal payments due on loans made or guaranteed under the RE Act;

(ii) A borrower that was in default or near default, but is currently participating in a workout or debt restructuring plan with RUS; or

(iii) Experiencing a financial hardship.

Insured loan means a loan that is made, held, and serviced by the Administrator, and sold and insured by the Administrator, pursuant to Section 305 of the RE Act (7 U.S.C. 901 *et seq.*) for the provision of electric or telephone service in rural areas and does not include a loan made to promote economic development in rural areas.

Job creation means the creation of jobs in rural areas, or in close enough proximity to rural areas so that it is likely that the majority of the jobs created will be held by residents of rural areas.

Project means a rural development project that a borrower proposes and the Administrator approves as qualifying under this subpart.

RE Act means the Rural Electrification Act of 1936, as amended (7 U.S.C. 901 *et seq.*).

REA means the Rural Electrification Administration formerly an agency of the United States Department of Agriculture and predecessor agency to RUS with respect to administering certain electric and telephone loan programs.

RTB means the Rural Telephone Bank (telephone bank), a body corporate and an instrumentality of the United States, that obtains supplemental funds from non-Federal sources and utilizes them in making loans, operating on a self-sustaining basis to the extent practicable (section 401, RE Act).

RUS means the Rural Utilities Service, an agency of the United States Department of Agriculture established pursuant to Section 232 of the Federal Crop Insurance Reform and Department of Agriculture Reorganization Act of 1994 (Pub. L. 103–354, 108 Stat. 3178), successor to REA with respect to administering certain electric and telephone programs. See 7 CFR 1700.1.

Technical assistance means market research, product or service improvement, feasibility studies, environmental studies, and similar activities that benefit rural development or rural job creation projects.

(b) *Rules of construction.* Unless the context otherwise indicates; ''includes'' and ''including'' are not limiting, and ''or'' is not exclusive. The terms defined in §1703.302(a) include both the plural and the singular.

[58 FR 21639, Apr. 23, 1993, as amended at 59 FR 66440, Dec. 27, 1994]

§1703.303 Eligibility criteria for deferment of loan payments.

The deferment of loan payments may be granted to any borrower that is not financially distressed, delinquent on any Federal debt, or in bankruptcy proceedings. However, the deferment of loan payments will not be granted to a borrower during any period in which the Administrator has determined that no additional financial assistance of any nature should be provided to the

borrower pursuant to any provision of the RE Act. The determination to suspend eligibility for the deferment of loan payments under this subpart will be based on:

(a) The borrower's demonstrated unwillingness to exercise diligence in repaying loans made by RUS or RTB or guaranteed by RUS that results in the Administrator being unable to find that such loans, would be repaid within the time agreed; or

(b) The borrower's demonstrated unwillingness to meet the requirements in RUS's or RTB's legal documents or regulations.

§ 1703.304 Restrictions on the deferment of loan payments.

(a) The deferment must not impair the security of any loans made RUS or RTB, or guaranteed by RUS, pursuant to the RE Act.

(b) At no point in time may the amount of the debt service payments deferred exceed 50 percent of the total cost of a community, business, or economic development project for which a deferment is provided.

(c) A borrower may defer debt service payments only in an amount equal to the investment made by such borrower in a rural development project. The investment must not be made from:

(1) Proceeds of loans made or guaranteed pursuant to the RE Act, or grants made pursuant to the RE Act or section 2331 through section 2335A of the Rural Economic Development Act of 1990 (7 U.S.C. 950aaa *et seq.*);

(2) Funds necessary to make timely payments of principal and interest on loans made, guaranteed or lien accommodated pursuant to the RE Act;

(3) Insurance proceeds from mortgaged property;

(4) Damage awards and sale proceeds resulting from eminent domain and similar proceedings involving mortgaged property;

(5) Sale proceeds from mortgaged property sales requiring specific Administrator approval; and

(6) Funds which are restricted by RUS or RTB loan instruments to be held in trust for the Government or to be held for any other specific purpose.

(d) Any investment made in a rural development project prior to the date of the application for a deferment based on such project cannot be used to satisfy the requirements of this section.

§ 1703.305 Requirements for deferment of loan payments.

(a) Except as otherwise provided in paragraph (b) of this section, the borrower must make a cushion of credit payment equal to the amount of the payment deferred and subject to the following rules:

(1) Cushion of credit payments made prior to the date that an application for deferral has been approved by RUS cannot be used to satisfy the requirements of this section;

(2) Once a cushion of credit payment has been made to satisfy the requirements of paragraph (a) of this section, it must remain on deposit in the cushion of credit account on the date of the deferral or the deferral will not take place; and

(3) The cushion of credit payment must be received by RUS on the date the payment being deferred is due, or within 30 days prior to this date.

(b) A borrower may elect to consolidate in one application filed pursuant to § 1703.311, all of the related deferrals it wishes to receive in a twelve month period following application approval. In such a case, the requirement contained in paragraph (a)(1) of this section may alternatively be satisfied by depositing an amount equal to the aggregate deferrals covered by such application into the cushion of credit account at the time the first cushion of credit payment is due under paragraph (a)(1) of this section.

§ 1703.306 Limitation on funds derived from the deferment of loan payments.

Funds derived from the deferment of loan payments will not be used:

(a) To fund or assist projects which would, in the judgement of the Administrator, create a conflict of interest or the appearance of a conflict of interest. The borrower must disclose to the Administrator information regarding any potential conflict of interest or appearance of a conflict of interest;

(b) For any purpose not reasonably related to the project as determined by the Administrator;

(c) To transfer existing employment or business activities from one area to another; or

(d) For the borrower's electric or telephone operations, nor for any operations affiliated with the borrower unless the Administrator has specifically informed the borrower in writing that the affiliated operations are part of the approved purposes.

§1703.307 Uses of the deferments of loan payments.

The deferment of loan payments will be made to enable the borrower to provide funding and assistance for rural development and job creation projects. This includes, but is not limited to, the borrower providing financing to local businesses, community development assistance, technical assistance to businesses, and other community, business, or economic development projects that will benefit rural areas.

§1703.308 Amount of deferment funds available.

(a) The total amount of deferments made available for each fiscal year under this program will not exceed 3 percent of the total payments due during fiscal year 1993 from all borrowers on direct loans and insured loans made under the RE Act. For each subsequent fiscal year after 1993, the total amount of deferments will not exceed 5 percent of the total payments due for the year from all borrowers on direct loans and insured loans.

(b) The total amount of annual deferments are subject to limitations established by appropriations Acts.

§1703.309 Terms of repayment of deferred loan payments.

(a) Deferments made to enable the borrower to provide financing to local businesses will be repaid over a period of 60 months, in equal installments, with payments beginning on the date of the deferment, and continuing in such a manner until the total amount of the deferment is repaid. The deferment payments will be made on either a monthly or quarterly basis depending on the existing repayment terms of the direct loan or insured loan being deferred. The deferment will not accrue interest.

(b) In the case of deferments made to enable the borrower to provide community development assistance, technical assistance to businesses, and for other community, business, or economic development projects not included in paragraph (a) of this section, the deferment will be repaid over a period of 120 months, in equal installments, with payments beginning on the date of the deferment and continuing in such a manner until the total amount of the deferment is repaid. The deferment payments will be made on either a monthly or quarterly basis depending on the existing repayment terms of the direct loan or insured loan being deferred. The deferment will not accrue interest.

(c) The maturity date of a loan may not be extended as a result of a deferment.

(d) If the required payment is not made by the borrower or received by the Administrator when due, the Administrator will reduce the borrower's cushion of credit account established under this subpart in an amount equal to the deferment payment required.

(e) The balance in a borrower's cushion of credit account shall not be reduced by the borrower below the level of the unpaid balance of the payment deferred.

§1703.310 Environmental considerations.

Prospective recipients of funds received from the deferment of loan payments are encouraged to consider the potential environmental impact of their proposed projects at the earliest planning stage and plan development in a manner that reduces, to the extent practicable, the potential to affect the quality of the human environment adversely.

§1703.311 Application procedures for deferment of loan payments.

(a) A borrower applying for a deferment must:

(1) Submit a certified board resolution to the Administrator requesting a deferment of principal and interest. The resolution must:

(i) Be signed by the president or vice president of the borrower;

(ii) Contain information on the total amount of deferment requested for each specific project;

(iii) Contain information on the type of project and the length of deferment requested as defined in § 1703.309; and

(iv) Specify which officer of the borrower has been given the authority to certify to those matters required in this section;

(2) Submit certification by the appropriate officer to the Administrator that the proposed project will not violate the limitations set forth in § 1703.306 and disclose all information regarding any potential conflict of interest or appearance of a conflict of interest that would allow the Administrator to make an informed decision;

(3) Submit certification by the appropriate officer to the Administrator that an investment in the rural development project will be made by the borrower in an amount equal to the deferred debt service payment;

(4) Submit certification by the appropriate officer to the Administrator that the amount of the deferment will not exceed 50 percent of the total cost of the project for which the deferment is provided;

(5) Submit certification by the appropriate officer to the Administrator that it will make a cushion of credit payment necessary to satisfy the requirement of § 1703.305(a);

(6) Submit certification by the appropriate officer to the Administrator that it will comply with § 1703.313 and provide documentation showing that its total investments, including the proposed investment, will not exceed the investment limitations specified in 7 CFR part 1717, Subpart N, Investments, Loans and Guarantees by Electric Borrowers, or 7 CFR Part 1744, Post Loan Policies and Procedures Common to Guaranteed and Insured Loans. The documentation must provide a list of each rural development project the borrower has invested in to date, including the investment amounts;

(7) Submit to the Administrator written identification of the direct loan(s) and/or insured loan(s) for which payments are to be deferred;

(8) Submit to the Administrator a written narrative which contains information regarding the proposed rural development or job creation project such as the manner in which the project will promote community, business, or economic development in rural areas, the nature of the project, its location, the primary beneficiaries, and, if applicable, the number and type of jobs to be created; and

(9) Submit to the Administrator a letter of approval from the state regulatory authority, if applicable, granting its approval for the borrower to defer direct loan payment(s) and/or insured loan payment(s) and invest the amount in a rural development project.

(b) The Administrator reserves the right to determine that special circumstances require additional data from borrowers before acting on a deferment. The Administrator also reserves the right to require, as a condition of approving a loan payment deferment pursuant to this subpart, that the borrower execute and deliver any amendments or supplements to its loan documents that may be necessary or appropriate to achieve the purposes outlined in § 1703.300.

(c) The Administrator will decide whether the borrower is eligible for the deferment and will notify the borrower of the decision.

§ 1703.312 RUS review requirements.

Borrowers shall ensure that funds are invested in the rural development project as approved by RUS. The Administrator reserves the right to review the books and copy records of borrowers receiving loan payment deferments as necessary to ensure that the investments in the rural development project are in accordance with this subpart and the representations and purposes stated in the borrower's completed application. If an audit discloses that the amount deferred was not used for the purposes stated in the completed application, the borrower shall be required to promptly repay the amount deferred and the benefits of the

deferment to the borrower will be recaptured by RUS. The borrower is responsible for ensuring that disbursements and expenditures of funds covering the investment in the rural development project are properly supported with certifications, invoices, contracts, bills of sale, cancelled checks, or any other forms of evidence determined appropriate by the Administrator and that such supporting material is available at the borrower's premises for review by the RUS field accountant, borrower's certified public accountant, the Office of Inspector General, the General Accounting Office and any other accountant conducting an audit of the borrower's financial statements for this rural development program.

§ 1703.313 Compliance with other regulations.

(a) Investments in a rural economic development project made by an electric borrower under this subpart are subject to the provisions of 7 CFR part 1717, Subpart N, Investments, Loans and Guarantees by Electric Borrowers.

(b) Investments in a rural economic development project made by a telephone borrower under this subpart are subject to the provisions of 7 CFR Part 1744, Post Loan Policies and Procedures Common to Guaranteed and Insured Loans.

PART 1710—GENERAL AND PRE-LOAN POLICIES AND PROCEDURES COMMON TO INSURED AND GUARANTEED ELECTRIC LOANS

Subpart A—General

Sec.
1710.1 General statement.
1710.2 Definitions and rules of construction.
1710.3 Form and bulletin revisions.
1710.4 Exception authority.
1710.5 Availability of forms.
1710.6 Applicability of certain provisions to completed loan applications.
1710.7 Exemptions of RUS operational controls under section 306E of the RE Act.
1710.8—1710.49 [Reserved]

Subpart B—Types of Loans and Loan Guarantees

1710.50 Insured loans.
1710.51 Loan guarantees.
1710.52—1710.99 [Reserved]

Subpart C—Loan Purposes and Basic Policies.

1710.100 General.
1710.101 Types of eligible borrowers.
1710.102 Borrower eligibility for different types of loans.
1710.103 Area coverage.
1710.104 Service to non-RE Act beneficiaries.
1710.105 State regulatory approvals.
1710.106 Uses of loan funds.
1710.107 Amount lent for acquisitions.
1710.108 Mergers and consolidations.
1710.109 Reimbursement of general funds and interim financing.
1710.110 Supplemental financing.
1710.111 Refinancing.
1710.112 Loan feasibility.
1710.113 Loan security.
1710.114 TIER, DSC, OTIER and ODSC requirements.
1710.115 Final maturity.
1710.116 [Reserved]
1710.117 Environmental considerations.
1710.118 [Reserved]
1710.119 Loan processing priorities.
1710.120 Construction standards and contracting.
1710.121 Insurance requirements.
1710.122 Equal opportunity and nondiscrimination.
1710.123 Debarment and suspension.
1710.124 Uniform Relocation Act.
1710.125 Restrictions on lobbying.
1710.126 Federal debt delinquency.
1710.127 Drug free workplace.
1710.128—1710.149 [Reserved]

Subpart D—Basic Requirements for Loan Approval

1710.150 General.
1710.151 Required findings for all loans.
1710.152 Primary support documents.
1710.153 Additional requirements and procedures.
1710.154—1710.199 [Reserved]

Subpart E–Power Requirements Studies

1710.200 Purpose.
1710.201 Requirement to prepare a PRS—power supply borrowers.
1710.202 Requirement to prepare a PRS—distribution borrowers.
1710.203 Basic policies and requirements for a PRS.
1710.204 PRS work plan requirements.
1710.205 Basic criteria for RUS approval of a PRS.
1710.206 Waiver of borrower requirements.
1710.207—1710.249 [Reserved]

Subpart F—Construction Work Plans and Related Studies

1710.250 General.
1710.251 Construction work plans—distribution borrowers.
1710.252 Construction work plans—power supply borrowers.
1710.253 Engineering and cost studies—addition of generation capacity.
1710.254 Alternative sources of power.
1710.255—1710.299 [Reserved]

Subpart G—Long-Range Financial Forecasts

1710.300 General.
1710.301 Financial forecasts—distribution borrowers.
1710.302 Financial forecasts—power supply borrowers.
1710.303 Power cost studies—power supply borrowers.
1710.304—1710.349 [Reserved]

Subpart H—Demand Side Management and Renewable Energy Systems

1710.350 Purpose.
1710.351 General policy; renewable energy systems.
1710.352 General policy; energy resource conservation programs.
1710.353 General policy; demand side management.
1710.354 Eligible DSM activities.
1710.355 DSM loan applications.
1710.356 Integrated resource plans.
1710.357 DSM plans.
1710.358 Requirements for a DSM plan.
1710.359 DSM effects.
1710.360 Submittal of alternate documentation.
1710.361 Type and term of loans.
1710.362 Loan approval.
1710.363 Advance and documentation of use of loan funds.
1710.364 Loan limits.

Subpart I—Application Requirements and Procedures for Insured and Guaranteed Loans

1710.400 Initial contact.
1710.401 Loan application documents.
1710.402—1710.403 [Reserved]
1710.404 Additional requirements.
1710.405 Supplemental financing documents.
1710.406 Loan approval.
1710.407 Loan documents.

AUTHORITY: 7 U.S.C. 901–950(b); Pub. L. 99–591, 100 Stat. 3341; Pub. L. 103–354, 108 Stat. 3178 (7 U.S.C. 6941 *et seq.*).

SOURCE: 57 FR 1053, Jan. 9, 1992, unless otherwise noted.

Subpart A—General

§ 1710.1 General statement.

(a) This part establishes general and pre-loan policies and requirements that apply to both insured and guaranteed loans to finance the construction and improvement of electric facilities in rural areas, including generation, transmission, and distribution facilities.

(b) Additional pre-loan policies, procedures, and requirements that apply specifically to guaranteed and/or insured loans are set forth elsewhere:

(1) For guaranteed loans in 7 CFR part 1712 and RUS Bulletins 20–22, 60–10, 86–3, 105–5, and 111–3, or the successors to these bulletins; and

(2) For insured loans in 7 CFR part 1714 and in RUS Bulletins 60–10, 86–3, 105–5, and 111–3, or the successors to these bulletins.

(c) This part supersedes those portions of the following RUS Bulletins and supplements that are in conflict.

20–5 Extensions of Payments of Principal and Interest
20–20 Deferment of Principal Repayments for Investment in Supplemental Lending Institutions
20–22 Guarantee of Loans for Bulk Power Supply Facilities
20–23 Section 12 Extensions for Energy Resources Conservation Loans
60–10 Construction Work Plans, Electric Distribution Systems
86–3 Headquarters Facilities for Electric Borrowers
105–5 Financial Forecast-Electric Distribution Systems
111–3 Power Supply Surveys
120–1 Development, Approval, and Use of Power Requirements Studies

(d) When parts 1710, 1712, and 1714 are published in final form, the bulletins cited in paragraph (b) of this section will be rescinded, in whole or in part, or revised.

[57 FR 1053, Jan. 9, 1992, as amended at 58 FR 66262, Dec. 20, 1993]

§ 1710.2 Definitions and rules of construction.

(a) *Definitions.* For the purpose of this part, the following terms shall have the following meanings:

Administrator means the Administrator of RUS or his or her designee.

APRR means Average Adjusted Plant Revenue Ratio calculated as a simple average of the adjusted plant revenue ratios for 1978, 1979 and 1980 as follows:

$$\text{APRR} = \frac{A + B}{C - D}$$

where:

A=Distribution (plant), which equals Part E, Line 14(e) of RUS Form 7;

B=General Plant, which equals Part E, Line 24(e) of RUS Form 7;

C=Operating Revenue and Patronage Capital, which equals Part A, Line 1 of RUS Form 7; and

D=Cost of Power, which equals the sum of Part A, Lines 2, 3, and 4 of RUS Form 7.

Area Coverage means the provision of adequate electric service to the widest practical number of rural users in the borrower's service area during the life of the loan.

Borrower means any organization that has an outstanding loan made or guaranteed by RUS for rural electrification, or that is seeking such financing.

Bulk Transmission Facilities means the transmission facilities connecting power supply facilities to the subtransmission facilities, including both the high and low voltage sides of the transformer used to connect to the subtransmission facilities, as well as related supervisory control and data acquisition systems.

Call provision has the same meaning as ''prepayment option''.

Consolidation means the combination of 2 or more borrower or nonborrower organizations, pursuant to state law, into a new successor organization that takes over the assets and assumes the liabilities of those organizations.

Consumer means a retail customer of electricity, as reported on RUS Form 7, Part R, Lines 1–7.

Demand side management (DSM) means the deliberate planning and/or implementation of activities to influence consumer use of electricity provided by a distribution borrower to produce beneficial modifications to the system load profile. Beneficial modifications to the system load profile ordinarily improve load factor or otherwise help in utilizing electric system resources to best advantage consistent with acceptable standards of service and lowest system cost. Load profile modifications are characterized as peak clipping, valley filling, load shifting, strategic conservation, strategic load growth, and flexible load profile. (See, for example, publications of the Electric Power Research Institute (EPRI), 3412 Hillview Avenue, Palo Alto, CA 94304, especially ''Demand-Side Management Glossary'' EPRI TR–101158, Project 1940–25, Final Report, October 1992.) DSM includes energy conservation programs. It does not include sources of electrical energy such as renewable energy systems, fuel cells, or traditionally fueled generation, such as fossil or nuclear fueled generators.

Distribution Borrower means a borrower that sells or intends to sell electric power and energy at retail in rural areas.

Distribution Facilities means all electrical lines and related facilities beginning at the consumer's meter base, and continuing back to and including the distribution substation.

DSC means Debt Service Coverage of the borrower calculated as:

$$\text{DSC} = \frac{A + B + C}{D}$$

Where:

All amounts are for the same calendar year and are based on the RUS system of accounts and RUS Forms 7 and 12. References to line numbers in the RUS Forms 7 and 12 refer to the June 1994 version of RUS Form 7 and the December 1993 version of RUS Form 12, and will apply to corresponding information in future versions of the forms;

A=Depreciation and Amortization Expense of the borrower, which equals Part A, Line 12 of RUS Form 7 (distribution borrowers) or Section A, Line 20 of RUS Form 12a (power supply borrowers);

B=Interest expense on total long-term debt of the borrower, which equals Part A, Line 15 of RUS Form 7 or Section A, Line 22 of RUS Form 12a, except that interest expense shall be increased by ⅓ of the amount, if any, by which restricted rentals of the borrower (Part M, Line 3 of RUS Form 7 or Section K, Line 4 of RUS Form 12h) exceed 2 percent of the borrower's equity (RUS Form 7, Part C, Line 36 [Total Margins & Equities] less Line 26 [Regulatory Assets] or RUS Form 12a, Section B, Line 38 [Total Margins & Equities] less Line 28 [Regulatory Assets]);

C=Patronage Capital or Margins of the borrower, which equals Part A, Line 28 of RUS

Form 7 or Section A, Line 35 of RUS Form 12a; and

D=Debt Service Billed (RUS + other), which equals the sum of all payments of principal and interest required to be made on account of total long-term debt of the borrower during the calendar year, plus ⅓ of the amount, if any, by which restricted rentals of the borrower (Part M, Line 3 of RUS Form 7 or Section K, Line 4 of RUS Form 12h) exceed 2 percent of the borrower's equity (RUS Form 7, Part C, Line 36 [Total Margins & Equities] less Line 26 [Regulatory Assets] or RUS Form 12a, Section B, Line 38 [Total Margins & Equities] less Line 28 [Regulatory Assets]);

DSM activities means activities of the type referred to in § 1710.354(f).

DSM plan means a plan that describes the implementation at the distribution level of the DSM activities identified in the integrated resource plan as having positive net benefits. See § 1710.357.

Electric system means all of the borrower's interests in all electric production, transmission, distribution, conservation, load management, general plant and other related facilities, equipment or property and in any mine, well, pipeline, plant, structure or other facility for the development, production, manufacture, storage, fabrication or processing of fossil, nuclear, or other fuel or in any facility or rights with respect to the supply of water, in each case for use, in whole or in major part, in any of the borrower's generating plants, including any interest or participation of the borrower in any such facilities or any rights to the output or capacity thereof, together with all lands, easements, rights-of-way, other works, property, structures, contract rights and other tangible and intangible assets of the borrower in each case used or useful in such electric system.

Equity means total margins and equities, which equals Part C, Line 33 of RUS Form 7 (distribution borrowers) or Section B, Line 34 of RUS Form 12a (power supply borrowers).

Final maturity means the final date on which all outstanding principal and accrued interest on an electric loan is due and payable.

Five percent hardship rate means an interest rate of 5 percent applicable to a hardship rate loan.

Fund advance period means the period of time during which the Government may advance loan funds to the borrower. See 7 CFR 1714.56.

Generation Facilities means the generating plant and related facilities, including the building containing the plant, all fuel handling facilities, and the stepup substation used to convert the generator voltage to transmission voltage, as well as related energy management (dispatching) systems.

Hardship rate loan means a loan made at the 5 percent hardship rate pursuant to 7 CFR 1714.8.

Insured Loan means a loan made pursuant to Section 305 of the RE Act, and may include a direct loan made under Section 4 of the RE Act.

Integrated Resources Plan (IRP) means a plan resulting from the planning and selection process for new energy resources that evaluates the benefits and costs of the full range of alternatives, including new generating capacity, power purchases, DSM programs, system operating efficiency, and renewable energy systems.

Interest rate cap means a maximum interest rate of 7 percent applicable to certain municipal rate loans as set forth in § 1710.7.

Interest rate term means a period of time selected by the borrower for the purpose of determining the interest rate on an advance of funds. See 7 CFR 1714.6.

Loan means any loan made or guaranteed by RUS.

Loan Contract means the agreement, as amended, supplemented, or restated from time to time, between a borrower and RUS providing for loans made or guaranteed pursuant to the RE Act.

Loan Feasibility means that the borrower has the capability of repaying the loan in full as scheduled, in accordance with the terms of the mortgage, note, and loan contract.

Loan Guarantee means a loan guarantee made by RUS pursuant to the RE Act.

Loan period means the period of time during which the facilities included in a loan application will be constructed. It commences with the date shown on page 1, in the block headed ''Cost Estimates as of,'' of RUS Form 740c, Cost

Estimates and Loan Budget for Electric Borrowers, which is the same as the date on the Financial and Statistical Report submitted with the loan application. The loan period may be up to 4 years for distribution borrowers and, except in the case of a loan for new generating and associated transmission facilities, up to 4 years for the transmission facilities and improvements or replacements of generation facilities for power supply borrowers. The loan period for new generating facilities is determined on a case by case basis.

Merger means the combining, pursuant to state law, of borrower or nonborrower organizations into an existing survivor organization that takes over the assets and assumes the liabilities of the merged organizations.

Mortgage means any and all instruments creating a lien on or security interest in the borrower's assets in connection with loans or guarantees under the RE Act.

Municipal rate loan means a loan made at a municipal interest rate pursuant to 7 CFR 1714.5.

ODSC means Operating Debt Service Coverage of the electric system calculated as:

$$\mathrm{ODSC} = \frac{A+B+C}{D}$$

Where:

All amounts are for the same calendar year and are based on the RUS system of accounts and RUS Form 7. References to line numbers in the RUS Form 7 refer to the June 1994 version of the form, and will apply to corresponding information in future versions of the form;

A=Depreciation and Amortization Expense of the electric system, which usually equals Part A, Line 12 of RUS Form 7;

B=Interest expense on total long-term debt of the electric system, which usually equals Part A, Line 15 of RUS Form 7, except that such interest expense shall be increased by ⅓ of the amount, if any, by which restricted rentals of the electric system (usually Part M, Line 3 of RUS Form 7) exceed 2 percent of the borrower's equity (RUS Form 7, Part C, Line 36 [Total Margins & Equities] less Line 26 [Regulatory Assets]);

C=Patronage Capital & Operating Margins of the electric system, which usually equals Part A, Line 20 of RUS Form 7, plus cash received from the retirement of patronage capital by suppliers of electric power and by lenders for credit extended for the Electric System; and

D=Debt Service Billed (RUS + other), which equals the sum of all payments of principal and interest required to be made on account of total long-term debt of the electric system during the calendar year, plus ⅓ of the amount, if any, by which restricted rentals of the Electric System (usually Part M, Line 3 of RUS Form 7) exceed 2 percent of the borrower's equity (RUS Form 7, Part C, Line 36 [Total Margins & Equities] less Line 26 [Regulatory Assets]).

Off-grid renewable energy system means an energy source which is not electrically attached to the grid. Off-grid systems are operated as an island and will have no direct impact on a utility system's physical operations. An off-grid system need not meet electric utility power quality standards.

On-grid renewable energy system means an energy source electrically attached to an existing grid. It can be attached on either side of a consumer's meter. On-grid systems are operated as part of the overall utility system and have a direct impact on a utility system's operations. An on-grid system must meet electric utility power quality and safety standards.

Ordinary Replacement means replacing one or more units of plant, called ''retirement units'', with similar units when made necessary by normal wear and tear, damage beyond repair, or obsolescence of the facilities.

OTIER means Operating Times Interest Earned Ratio of the electric system calculated as:

$$\mathrm{OTIER} = \frac{A+B}{A}$$

Where:

All amounts are for the same calendar year and are based on the RUS system of accounts and RUS Form 7. References to line numbers in the RUS Form 7 refer to the June 1994 version of the form, and will apply to corresponding information in future versions of the form;

A=Interest expense on total long-term debt of the electric system, which usually equals Part A, Line 15 of RUS Form 7, except that such interest expense shall be increased by ⅓ of the amount, if any, by which restricted rentals of the electric system (usually Part M, Line 3 of RUS Form 7) exceed 2 percent of the borrower's equity (RUS Form 7, Part C, Line 36 [Total Margins & Equities] less Line 26 [Regulatory Assets]); and

B=Patronage Capital & Operating Margins of the electric system, which usually equals Part A, Line 20 of RUS Form 7, plus cash received from the retirement of patronage capital by suppliers of electric power and by lenders for credit extended for the Electric System.

Power Requirements Study (PRS) means the thorough study of a borrower's electric loads and the factors that affect those loads in order to determine, as accurately as practicable, the borrower's future requirements for energy and capacity.

Power Supply Borrower means a borrower that sells or intends to sell electric power at wholesale to distribution or power supply borrowers pursuant to RUS wholesale power contracts.

Prepayment option means a provision included in the loan documents to allow the borrower to prepay all or a portion of an advance on a municipal rate loan on a date other than a rollover maturity date. See 7 CFR 1714.9.

PRR means Plant Revenue Ratio calculated as:

$$PRR = \frac{A}{B - C}$$

where:

A = Total Utility Plant, which equals Part C, Line 3 of RUS Form 7;

B = Operating Revenue and Patronage Capital, which equals Part A, Line 1 of RUS Form 7; and

C = Cost of Power, which equals the sum of Part A, Lines 2, 3, and 4 of RUS Form 7.

PRS Work Plan means the plan that sets forth the resources, methods, schedules, and milestones to be used in the preparation and maintenance of a power requirements study.

RE Act means the Rural Electrification Act of 1936, as amended (7 U.S.C. 901 *et seq.)*.

RE Act beneficiary means a person, business, or other entity that is located in a rural area.

REA means the Rural Electrification Administration formerly an agency of the United States Department of Agriculture and predecessor agency to RUS with respect to administering certain electric and telephone loan programs.

Renewable energy system means a source of energy (kWh) used to meet borrower electric load that is fueled by any of the following technologies: Hydropower, geothermal, biomass, municipal waste, solar thermal, photovoltaic, wind, fuel cells not fueled by fossil fuels. See, for example, ''Renewable Resources in U.S. Electricity Supply,'' February 1993, Publication number DOE/EIA 0561, published by the Department of Energy, Energy Information Administration, Forrestal Building, EI–231, Washington, DC 20585.

Retirement Unit means a substantial unit of property, which when retired, with or without being replaced, is accounted for by removing its book cost from the plant account.

Rollover maturity date means the last day of an interest rate term.

Rural area means any area of the United States, its territories and insular possessions (including any area within the Federated States of Micronesia, the Marshall Islands, and the Republic of Palau) not included within the boundaries of any urban area, as defined by the Bureau of the Census. For purposes of the ''rural area'' definition, the character of an area is determined at the time of the initial loan to furnish or improve service in the area.

(i) For initial RUS loans made prior to November 1, 1993, the RE Act defined ''rural area'' to mean any area of the United States not included within the boundaries of any city, village, or borough having a population exceeding 1500. An area determined to be a ''rural area'' for the purposes of an initial loan made prior to November 1, 1993, shall continue to be considered a ''rural area.''

(ii) For initial RUS loans made on or after November 1, 1993, this definition shall apply. In determining the character of the area, RUS will rely on the Bureau of the Census designation.

RUS means the Rural Utilities Service, an agency of the United States Department of Agriculture established pursuant to Section 232 of the Federal Crop Insurance Reform and Department of Agriculture Reorganization Act of 1994 (Pub. L. 103–354, 108 Stat. 3178), successor to REA with respect to administering certain electric and telephone programs. See 7 CFR 1700.1.

Subtransmission Facilities means the transmission facilities that connect

the high voltage side of the distribution substation to the low voltage side of the bulk transmission or generating facilities, as well as related supervisory control and data acquisition facilities.

System Improvement means the change or addition to electric plant facilities to improve the quality of electric service or to increase the quantity of electric power available to RE Act beneficiaries.

TIER means Times Interest Earned Ratio of the borrower calculated as:

$$\text{TIER} = \frac{A + B}{A}$$

Where:

All amounts are for the same calendar year and are based on the RUS system of accounts and RUS Forms 7 and 12. References to line numbers in the RUS Forms 7 and 12 refer to the June 1994 version of RUS Form 7 and the December 1993 version of RUS Form 12, and will apply to corresponding information in future versions of the forms;

A=Interest expense on total long-term debt of the borrower, which equals Part A, Line 15 of RUS Form 7 or Section A, Line 22 of RUS Form 12a, except that interest expense shall be increased by ⅓ of the amount, if any, by which restricted rentals of the borrower (Part M, Line 3 of RUS Form 7 or Section K, Line 4 of RUS Form 12h) exceed 2 percent of the borrower's equity (RUS Form 7, Part C, Line 36 [Total Margins & Equities] less Line 26 [Regulatory Assets] or RUS Form 12a, Section B, Line 38 [Total Margins & Equities] less Line 28 [Regulatory Assets]); and

B=Patronage Capital or Margins of the borrower, which equals Part A, Line 28 of RUS Form 7 or Section A, Line 35 of RUS Form 12a.

Total Assets means Part C, Line 26 of RUS Form 7 (distribution borrowers) or Section B, Line 27 of RUS Form 12a (power supply borrowers).

Total Utility Plant means Part C, Line 3 of RUS Form 7 (distribution borrowers) or Section B, Line 27 of RUS Form 12a (power supply borrowers).

Transmission Facilities means all electrical lines and related facilities, including certain substations, used to connect the distribution facilities to generation facilities. They include bulk transmission and subtransmission facilities.

Urban area is defined by the Bureau of the Census as an area comprising all territory, population, and housing units in urbanized areas and in places of 2500 or more persons outside urbanized areas. More specifically, ''urban'' consists of territory, persons, and housing units in:

(i) Places of 2500 or more persons incorporated as cities, villages, boroughs (except in Alaska and New York), and towns (except in the six New England States, New York, and Wisconsin), but excluding the rural portions of ''extended cities.''

(ii) Census designated places of 2500 or more persons.

(iii) Other territory, incorporated or unincorporated, included in urbanized areas.

Urbanized area means an urbanized area as defined by the Bureau of the Census in notices published periodically in the FEDERAL REGISTER. Generally an urbanized area is characterized as an area that comprises a place and the adjacent densely settled territory that together have a minimum population of 50,000 people.

(b) *Rules of Construction*. Unless the context otherwise indicates, ''includes'' and ''including'' are not limiting, and ''or'' is not exclusive. The terms defined in paragraph (a) of this part include the plural as well as the singular, and the singular as well as the plural.

[57 FR 1053, Jan. 9, 1992; 57 FR 4513, Feb. 5, 1992, as amended at 58 FR 66263, Dec. 20, 1993; 59 FR 495, Jan. 4, 1994; 59 FR 66440, Dec. 27, 1994; 60 FR 3730, Jan. 19, 1995; 60 FR 67400, Dec. 29, 1995]

§ 1710.3 Form and bulletin revisions.

References in this part to RUS or REA forms or line numbers in RUS or REA forms are based on RUS or REA Form 7 and Form 12 dated December 1992, unless otherwise indicated. These references will apply to corresponding information in future versions of the forms. The terms ''RUS form'', ''RUS standard form'', ''RUS specification'', and ''RUS bulletin'' have the same meanings as the terms ''REA form'', ''REA standard form'', ''REA specification'', and ''REA bulletin'', respectively, unless otherwise indicated.

[59 FR 66440, Dec. 27, 1994]

§ 1710.4 Exception authority.

Consistent with the RE Act and other applicable laws, the Administrator

may waive or reduce any requirement imposed by this part or other RUS regulations on an electric borrower, or a lender whose loan is guaranteed by RUS, if the Administrator determines that imposition of the requirement would adversely affect the Government's financial interest.

§ 1710.5 Availability of forms.

Information about the availability of RUS forms and publications cited in this part is available from Administrative Services Division, Rural Utilities Service, United States Department of Agriculture, Washington, DC 20250–1500. These RUS forms and publications may be reproduced.

§ 1710.6 Applicability of certain provisions to completed loan applications.

(a) Certain new or revised policies and requirements set forth in this part, which are listed in this paragraph, shall not apply to a pending loan application that has been determined by RUS to be complete as of January 9, 1992, the date of publication of such policies and requirements in the FEDERAL REGISTER. This exception does not apply to loan applications received after said date, nor to incomplete applications pending as of said date. This exception applies only to the following provisions:

(1) Paragraph 1710.115(b)—with respect to limiting loan maturities to the expected useful life of the facilities financed;

(2) Section 1710.116—with respect to the requirement to develop and follow an equity development plan;

(3) Paragraph 1710.151(f)—with respect to the borrower providing satisfactory evidence that a state regulatory authority will allow the facilities to be included in the rate base or otherwise allow sufficient revenues to repay the loan;

(4) Paragraphs 1710.250(b), 1710.251(a), and 1710.252(a)—with respect to the requirement that improvements, replacements, and retirements of generation plant be included in a Construction Work Plan; and

(5) Paragraph 1710.300(d)(5)—with respect to the requirement that a borrower's financial forecast include a sensitivity analysis of a reasonable range of assumptions for each of the major variables in the forecast.

(b) Certain provisions of this part apply only to loans made on or after February 10, 1992. These provisions are identified in the individual sections of this part.

[57 FR 1053, Jan. 9, 1992; 57 FR 4513, Feb. 5, 1992, as amended at 58 FR 66263, Dec. 20, 1993]

§ 1710.7 Exemptions of RUS operational controls under section 306E of the RE Act.

(a) *General policy*. (1) Section 306E of the RE Act directs the Administrator to issue interim final regulations to minimize approval rights, requirements, restrictions, and prohibitions imposed on the operations of electric borrowers whose net worth exceeds 110 percent of the outstanding loans made or guaranteed to the borrower by RUS. The section also directs the Administrator, when requested by a private lender providing financing for capital investments by such borrowers, to offer, without delay, to share the government's lien on the borrowers' systems or subordinate the government's lien on the property financed by the private lender.

(2) In issuing the regulations, the Administrator is authorized to establish requirements, guided by the practices of private lenders with respect to similar credit risks, to ensure that the security, including the assurance of repayment, for loans made or guaranteed by RUS will remain reasonably adequate. If the regulations are not issued within 180 days of enactment of section 306E, the Administrator may not, until the regulations are issued, require prior approval of, or establish any requirement, restriction, or prohibition, with respect to the operations of any electric borrower that meets the 110 percent ratio.

(3) Nothing in section 306E limits the authority of the Administrator to establish terms and conditions on the use of funds from loans made or guaranteed by RUS, to establish loan feasibility criteria and other requirements for the approval of RUS loans or loan guarantees, such as those set forth in this part, or to take any other action specifically authorized by law.

(4) This section addresses the application of section 306E of the RE Act to RUS operational controls and other requirements that apply in general to RUS borrowers. The application of section 306E to lien accommodations and subordinations is set forth in 7 CFR 1717.860 and 1717.904.

(5) The exemptions granted by this section, 7 CFR 1717.860, and 7 CFR 1717.904 apply only to RUS controls and approval rights. They do not affect the controls and approval rights of other co-mortgagees under the RUS mortgage.

(6) For purposes of this section, the terms ''default,'' ''financed or funded by RUS,'' ''interchange agreement,'' ''interconnection agreement,'' ''loan documents,'' ''pooling agreement,'' ''power supply contract,'' and ''wheeling agreement'' have the meanings as set forth in 7 CFR 1717.602.

(b) *Determination of ratio.* The following principles and procedures will apply to the calculation of net worth as a ratio, expressed as a percent, to the outstanding balance of all loans made or guaranteed to the borrower by RUS, hereinafter called the borrower's ''net worth to RUS debt ratio'', or simply ''the ratio'':

(1) For purposes of determining whether a borrower is exempt from approvals, requirements, restrictions, or prohibitions imposed by RUS with respect to borrower operations, i.e., ''operational controls,'' the ratio normally will be based on data as of December 31. Net worth will be based on the year-end financial and statistical reports submitted by borrowers to RUS, and outstanding loans made or guaranteed by RUS will be based on RUS's records. The financial and statistical reports (Form 7 for distribution borrowers and Form 12a for power supply borrowers) are subject to RUS review and revision, and they must comply with RUS's system of accounts and accounting principles set forth in 7 CFR part 1767. Since sinking fund depreciation is not approved under 7 CFR part 1767, net worth for borrowers using sinking fund depreciation will be calculated as if the borrower had been using straight line depreciation;

(2) Net worth will be calculated by taking total margins and equities (from Part C of RUS Form 7 for distribution borrowers, or Section B of RUS Form 12a for power supply borrowers) and subtracting assets properly recordable in account 182.2, Unrecovered Plant and Regulatory Study Costs, and account 182.3, Other Regulatory Assets, as defined in 7 CFR part 1767; and

(3) By no later than July 1 of each year, RUS will notify each borrower in writing of its exemption status. If the borrower's net worth to RUS debt ratio exceeds 110 percent based on the most recent year-end data, the borrower will be exempt from the operational controls exempted under paragraph (c) of this section until subsequently notified in writing by RUS that it is no longer exempt.

(c) *Borrower operations exempted from RUS controls.* Borrowers who are notified by RUS in writing that their net worth to RUS debt ratio exceeds 110 percent are exempted from the operational controls of the RUS mortgage and loan contract listed in this paragraph. These controls, which are implemented through RUS regulations and other documents, are as follows:

(1) *RUS approval of extensions and additions.* RUS approval of extensions and additions to borrowers' electric systems, except for the following:

(i) Extensions and additions financed by RUS;

(ii) Construction, procurement, or leasing of generating facilities, regardless of the source of funding, if the combined capacity of the facilities to be built, procured, or leased, including any future facilities included in the planned project, will exceed 25 megawatts in the case of power supply borrowers, or the lesser of 5 megawatts or 30 percent of the borrower's equity in the case of distribution borrowers;

(iii) Acquisition or leasing of existing electric facilities or systems in service, regardless of the source of funding, whose purchase price, or capitalized value in the case of a lease, exceeds 10 percent of the borrower's net utility plant; and

(iv) Construction, procurement, or leasing of electric facilities, regardless of the source of funding, to serve a customer whose annual kWh purchases or maximum annual kW demand in the

foreseeable future is projected to exceed 25 percent of the borrower's total kWh sales or maximum kW demand in the year immediately preceding the acquisition or start of construction;

(2) *Long-range engineering plans and construction work plans.* RUS approval of long-range engineering plans and CWPs if the borrower does not intend to seek RUS financing for any of the facilities, equipment or other purposes included in those plans. However, if requested by RUS, a borrower must provide an informational copy of such plans to RUS;

(3) *Plans and specifications.* RUS approval of plans and specifications for construction not financed by RUS;

(4) *Standard forms of construction contracts, and engineering and architectural services contracts.* RUS requirements to use standard forms of contracts for construction, procurement, engineering services, and architectural services, if the construction, procurement or services are not financed by RUS. To be eligible for this waiver the contracts used must not contain any provisions that prohibit or restrict the assignment of the contracts to the government upon the exercise by RUS of its remedies under security instruments securing loans made or guaranteed by RUS;

(5) *Contract bidding requirements.* RUS requirements regarding the competitive bidding of construction contracts, if the construction is not financed by RUS;

(6) *RUS approval of contracts.* (i) Construction contracts and architectural and engineering contracts. RUS approval of contracts for construction and procurement and for architectural and engineering services, if such construction, procurement or services are not financed by RUS.

(ii) *Large retail power contracts.* RUS approval of contracts to sell electric power to retail customers except when the contract is for longer than 2 years and the kWh sales or kW demand for any year covered by the contract exceeds 25 percent of the borrower's total kWh sales or maximum kW demand for the year immediately preceding execution of the contract. This exemption applies regardless of the source of funding of any plant extensions, additions or improvements that may be involved in connection with the contract.

(iii) *Power supply arrangements.* (A) RUS approval of power supply contracts (including but not limited to economy energy sales and emergency power and energy sales), interconnection agreements, interchange agreements, wheeling agreements, pooling agreements, and any other similar power supply arrangements subject to approval by RUS, if they have a term of 2 years or less. Amendments to said power supply arrangements are also exempted from RUS approval provided that the amendment does not extend the term of the arrangement for more than 2 years beyond the date of the amendment.

(B) Any amendment to a schedule or exhibit contained in any power supply arrangement subject to RUS approval that merely has the effect of either altering a list of interconnection or delivery points or changing the value of a variable term (but not the formula itself) contained in a formulary rate or charge.

(C) The exemptions under this paragraph (c)(6)(iii) apply regardless of whether the borrower is a seller or purchaser of the services furnished by the contracts or arrangements, and regardless of whether or not a Federal power marketing agency is a party to any of them.

(iv) *System management and maintenance contracts.* RUS approval of contracts for the management and operation of a borrower's electric system or for the maintenance of the electric system, if such contracts do not cover all or substantially all of the electric system.

(v) *Other contracts.* [Reserved];

(7) *RUS approval of general manager.* RUS approval of the selection of a borrower's manager and employment contract, provided that the borrower is not in default under its loan documents or any other agreement with RUS. Nothing herein shall limit the right of RUS under the loan documents to request termination of the employment of a manager in the event of a default by the borrower;

(8) *Board of directors.* RUS approval of compensation of a borrower's board of directors;

(9) *Certain expenditures.* (i) RUS approval of expenditures for legal, accounting, and supervisory services by a borrower. However, while expenditures for accounting do not require RUS approval, the selection of a certified public accountant by the borrower to prepare audited reports required by RUS remains subject to RUS approval.

(ii) RUS approval of expenditures for engineering services by a borrower, if such engineering services will not be financed by RUS;

(10) *Banks.* RUS approval of banks or other depositories used by a borrower. However, without the prior written approval of RUS, a borrower shall not deposit funds from loans made or guaranteed by RUS in any bank or other depository that is not insured by the Federal Deposit Insurance Corporation or other Federal agency acceptable to RUS, or in any account not so insured.

(11) *Certain equipment.* RUS approval of the purchase of data processing equipment and system control equipment by a borrower, if the equipment is not financed by RUS;

(12) *Notification of rate changes.* Requirement that distribution borrowers notify RUS in writing of proposed changes in electric rates 90 days prior to the effective date of such rates. Instead, the required notification period shall be 30 days, and such notification shall be required only if requested by RUS;

(13) *Consolidations and mergers.* RUS approval of mergers and consolidations, and conveyances or transfers of the mortgaged property substantially as an entirety, if the following conditions are met:

(i) Such consolidation, merger, conveyance or transfer shall be on such terms as shall fully preserve the lien and security of the mortgage and the rights and powers of the mortgagees;

(ii) The entity formed by such consolidation or with which the borrower is merged or the corporation which acquires by conveyance or transfer the mortgaged property substantially as an entirety shall execute and deliver to the mortgagees a mortgage supplemental in recordable form and containing an assumption by such successor entity of the due and punctual payment of the principal of and interest on all of the outstanding notes and the performance and observance of every covenant and condition of the mortgage;

(iii) Immediately after giving effect to such transaction, no default under the mortgage shall have occurred and be continuing;

(iv) The borrower shall have delivered to the mortgagees a certificate of its general manager or other officer, in form and substance satisfactory to each of the mortgagees, which shall state that such consolidation, merger, conveyance or transfer and such supplemental mortgage comply with this section and that all conditions precedent herein provided for relating to such transaction have been complied with;

(v) The borrower shall have delivered to the mortgagees an opinion of counsel in form and substance satisfactory to each of the mortgagees; and

(vi) The entity formed by such consolidation or with which the borrower is merged or the corporation which acquires by conveyance or transfer the mortgaged property substantially as an entirety shall be an entity:

(A) Having equity equal to at least 27% of its total assets on a pro forma basis after giving effect to such transaction;

(B) Having a pro forma TIER of not less than 1.50 and a pro forma DSC of not less than 1.25 for each of the two preceding calendar years; and

(C) Having net utility plant equal to or greater than 1.0 times its total long-term debt on a pro forma basis;

(14) *Sale, lease, or transfer of capital assets.* RUS approval for a distribution borrower to sell, lease, or transfer capital assets, if the following conditions are met:

(i) The borrower is not in default;

(ii) In the most recent year for which data are available, the borrower achieved a TIER of at least 1.5, DSC of at least 1.25, OTIER of at least 1.1, and ODSC of at least 1.1, in each case based on the average or the best 2 out of the 3 most recent years;

(iii) The sale, lease, or transfer of assets will not reduce the borrower's existing or future requirements for energy or capacity being furnished to the borrower under any wholesale power

contract which has been pledged as security to the government;

(iv) Fair market value is obtained for the assets;

(v) The aggregate value of assets sold, leased, or transferred in any 12-month period is less than 10 percent of the borrower's net utility plant prior to the transaction;

(vi) The proceeds of such sale, lease, or transfer, less ordinary and reasonable expenses incident to such transaction, are immediately:

(A) Applied as a prepayment of all notes secured under the mortgage equally and ratably;

(B) In the case of dispositions of equipment, materials or scrap, applied to the purchase of other property useful in the borrower's utility business; or

(C) Applied to the acquisition of construction of utility plant; and

(vii) If the borrower has an RUS-approved wholesale power contract with a power supply borrower (seller), the circumstances of the sale, lease or transfer of capital assets conform with the conditions in such contract under which the seller may not withhold its consent to the sale, lease or transfer;

(15) *Limitations on distributions.* RUS approval for a borrower to declare or pay dividends, pay or determine to pay patronage refunds, retire patronage capital, or make any other cash distributions, if the following conditions are met:

(i) After giving effect to the distribution, the borrower's equity will be greater than or equal to 30 percent of its total assets;

(ii) The borrower is current on all payments due on all notes secured under the mortgage;

(iii) The borrower is not otherwise in default under its loan documents; and

(iv) After giving effect to the distribution, the borrower's current and accrued assets will be not less than its current and accrued liabilities.

(d) *RUS requirements and operational controls not exempted.* All requirements and operational controls contained in the RUS mortgage and loan contract, or otherwise imposed on borrowers pursuant to statute or regulation, that are not specifically listed in paragraph (c) of this section are not exempted and shall continue to apply according to their terms. Examples of such requirements and controls not exempted are listed in this paragraph for the convenience of the public. This list is not exhaustive, and the absence of a requirement or control from this list in no way means that the requirement or control has been exempted:

(1) Requirements and operational controls contained in the RUS mortgage or loan contract that are necessary to ensure that the security for loans made or guaranteed by RUS is reasonably adequate and that the loans will be repaid, or to accomplish other fundamental purposes of the RE Act. Some of these also represent terms and conditions with respect to the use by borrowers of the proceeds of loans made or guaranteed by RUS. Together, these controls include, but are not limited to, the following:

(i) Area coverage requirements set forth in the loan contract and in § 1710.103;

(ii) Requirement that certain borrowers maintain, on an ongoing basis, a power requirements study and a power requirements study work plan, as set forth in §§ 1710.201 and 1710.202;

(iii) Requirement that borrowers follow RUS construction standards and use RUS accepted materials, as set forth in § 1710.41, § 1710.45, and 7 CFR part 1728;

(iv) Requirement that borrowers maintain, on an ongoing basis, a long-range engineering plan and a construction work plan, as set forth in § 1710.250(b);

(v) Requirement that borrowers set rates for electric service sufficient to maintain certain coverage ratios, as set forth in § 1710.114;

(vi) Certain RUS approvals of retirements of capital credits in excess of amounts specifically authorized in the mortgage;

(vii) RUS approval of borrower investments, loans, guarantees, and other obligations under 7 CFR part 1717, subpart N;

(viii) RUS requirements on accounting, auditing, irregularities, financial reporting, and access to books and records;

(ix) Requirement that borrowers record the mortgage and mortgage amendments;

(x) Requirement that the mortgagor maintain and preserve the priority lien of the mortgage and defend title to the mortgaged property;

(xi) Requirements on maintenance and repair of the mortgaged property;

(xii) Requirements on insurance of the mortgaged property; and

(xiii) Certain RUS approvals of borrower mergers and consolidations; and

(2) Requirements imposed on borrowers pursuant to statute or regulation and not specifically exempted by paragraph (c) of this section. See, for example, §§1710.122 through 1710.127.

(e) *Rescission of exemptions if borrower defaults.* If a borrower is in default with respect to any requirement of its mortgage, loan contract with RUS, or any other agreement with RUS that has not been exempted pursuant to paragraph (c) of this section or other RUS regulations, upon written notice to the borrower RUS may rescind all or any part of the exemptions granted pursuant to paragraph (c) of this section or other RUS regulations. The reinstated requirements and controls will remain in effect until RUS determines that they are no longer needed to help ensure that the security, including the assurance of repayment, for loans made or guaranteed by RUS will remain reasonably adequate.

(f) *Reinstated controls.* If RUS controls are reinstated because the borrower defaults or its net worth falls below 110 percent of RUS debt, such controls and approval rights will apply to all applicable subsequent actions of the borrower, including without limitation the amendment of contracts that the borrower entered into while eligible for an exemption under this section.

[60 FR 67401, Dec. 29, 1995, as amended at 62 FR 27930, May 22, 1997]

§§1710.8—1710.49 [Reserved]

Subpart B—Types of Loans and Loan Guarantees

§1710.50 Insured loans.

RUS makes insured loans under section 305 of the RE Act.

(a) *Municipal rate loans.* The standard interest rate on an insured loan made on or after November 1, 1993, is the municipal rate, which is the rate determined by the Administrator to be equal to the current market yield on outstanding municipal obligations with remaining periods to maturity, up to 35 years, similar to the interest rate term selected by the borrower. In certain cases, an interest rate cap of 7 percent may apply. The interest rate term and rollover maturity date for a municipal rate loan will be determined pursuant to 7 CFR part 1714, and the borrower may elect to include in the loan documents a prepayment option (call provision).

(b) *Hardship rate loans.* RUS makes hardship rate loans at the 5 percent hardship rate to qualified borrowers meeting the criteria set forth in 7 CFR 1714.8

[58 FR 66263, Dec. 20, 1993]

§1710.51 Loan guarantees.

RUS provides financing through 100 percent loan guarantees made under sections 306 and 306A of the RE Act. RUS also provides 90 percent loan guarantees under section 311 of the RE Act to enable borrowers to secure financing from certain private lenders. The loan guarantees are made for a term of up to 35 years, and the interest rate is established at a rate agreed to by the borrower and the lender, with RUS concurrence. The guarantee applies to the repayment of both principal and interest.

[58 FR 66264, Dec. 20, 1993]

§§1710.52—1710.99 [Reserved]

Subpart C—Loan Purposes and Basic Policies

§1710.100 General.

RUS makes loans and loan guarantees to finance the construction of electric distribution, transmission and generation facilities, including system improvements and replacements required to furnish and improve electric service in rural areas, and for demand side management, energy conservation

programs, and on grid and off grid renewable energy systems. In some circumstances, RUS may finance selected operating expenses of its borrowers. Loans made or guaranteed by the Administrator of RUS will be made in conformance with the Rural Electrification Act of 1936, as amended (7 U.S.C. 901 *et seq.*), and 7 CFR chapter XVII. RUS provides certain technical assistance to borrowers when necessary to aid the development of rural electric service and to protect loan security.

[58 FR 66264, Dec. 20, 1993]

§ 1710.101 Types of eligible borrowers.

(a) RUS makes loans to corporations, states, territories, and subdivisions and agencies thereof; municipalities; people's utility districts; and cooperative, nonprofit, limited-dividend, or mutual associations that provide or propose to provide:

(1) The retail electric service needs of rural areas, or

(2) The power supply needs of distribution borrowers under the terms of power supply arrangements satisfactory to RUS.

(b) In making loans, RUS gives preference to states, territories, and subdivisions and agencies thereof; municipalities; people's utility districts; and cooperative, nonprofit, or limited-dividend associations. RUS does not make loans to individual consumers.

(c) For the purpose of determining eligibility of a distribution borrower not in default on the repayment of a loan made or guaranteed under the RE Act for a loan, loan guarantee, or lien accommodation, a default by a borrower from which a distribution borrower purchases wholesale power shall not:

(1) Be considered a default by the distribution borrower;

(2) Reduce the eligibility of the distribution borrower for assistance under the RE Act; or

(3) Be the cause, directly or indirectly, of imposing any requirement or restriction on the borrower as a condition of the assistance, except such requirements or restrictions as are necessary to implement a debt restructuring agreed on by the power supply borrower and RUS.

(d) For the purpose of determining the eligibility of a distribution borrower, RUS will consider whether the distribution borrower is current on its obligations to its wholesale power supplier under the RUS wholesale power contract.

(e) Nothing in paragraph (c) of this section relieves any distribution borrower that is a member of a power supply borrower in default on its obligations to RUS or operating under a debt restructuring agreement, of requirements set forth in RUS regulations, including, without limitation, § 1710.112(b)(6), or of any terms and conditions that the Administrator may otherwise impose on any borrower as a condition of obtaining a loan or loan guarantee (including, in appropriate cases, member guarantees).

(f) Except as provided in paragraph (g) of this section, former borrowers that have paid off all outstanding loans may reapply for a loan to serve RE Act beneficiary loads accruing from the time the former borrower's complete loan application is received by RUS. The determination of whether an area is rural will be based on the Census designation of the area at the time of the reapplication for a loan, if the area is not served by electric facilities financed by RUS. If the area is served by electric facilities financed by RUS, it will continue to be considered rural.

(g) Former borrowers that have prepaid all, or portions of outstanding insured and direct loans in accordance with RUS regulations must comply with the provisions of 7 CFR part 1786 before being considered eligible to borrow additional funds from RUS.

[57 FR 1053, Jan. 9, 1992; 57 FR 4513, Feb. 5, 1992. Revised and redesignated at 58 FR 66264, Dec. 20, 1993]

§ 1710.102 Borrower eligibility for different types of loans.

(a) *Insured loans under section 305.* Insured loans are normally reserved for the financing of distribution and subtransmission facilities of both distribution and power supply borrowers, including, under certain circumstances, the implementation of demand side management, energy conservation programs, and on grid and off grid renewable energy systems. In accordance

with §1710.110, the Administrator may require the borrower to obtain no more than 30 percent of the total debt financing required for a proposed project by means of a supplemental loan from another lender without an RUS guarantee.

(b) *One hundred percent loan guarantees under section 306.* Both distribution and power supply borrowers are eligible for 100 percent loan guarantees under section 306 of the RE Act for any or all of the purposes set forth in §1710.106, including, under certain circumstances, the implementation of demand side management, energy conservation programs, and on grid and off grid renewable energy systems. (See 7 CFR part 1712). These guarantees are normally used to finance bulk transmission and generation facilities, but they may also be used to finance distribution and subtransmission facilities. If a borrower applies for a section 306 loan guarantee to finance all or a portion of distribution and subtransmission facilities, such request will not affect the borrower's eligibility for an insured loan to finance any remaining portion of said facilities or for any future insured loan to finance other distribution or subtransmission facilities. A section 306 loan guarantee, however, may not be used to guarantee a supplemental loan required by §1710.110.

(c) *One hundred percent loan guarantees under section 306A.* Under section 306A of the RE Act, both distribution and power supply borrowers are eligible under certain conditions to use an existing section 306 guarantee to refinance advances made on or before July 2, 1986 from a loan made by the Federal Financing Bank. (See 7 CFR part 1786.)

(d) [Reserved]

(e) *Ninety percent guarantees of private-sector loans under section 311.* Under section 311 of the RE Act, both distribution and power supply borrowers in the state of Alaska are eligible under certain conditions to obtain from RUS a 90 percent guarantee of a private-sector loan to refinance their Federal Financing Bank loans. (See 7 CFR part 1786.)

[57 FR 2832, Jan. 24, 1992, as amended at 58 FR 66264, Dec. 20, 1993]

§1710.103 Area coverage.

(a) Borrowers shall make a diligent effort to extend electric service to all unserved persons within their service area who:

(1) Desire electric service; and

(2) Meet all reasonable requirements established by the borrower as a condition of service.

(b) If economically feasible and reasonable considering the cost of providing such service and/or the effects on all consumers' rates, such service shall be provided, to the maximum extent practicable, at the rates and minimum charges established in the borrower's rate schedules, without the payment by such persons, other than seasonal or temporary consumers, of a contribution in aid of construction. A seasonal consumer is one that demands electric service only during certain seasons of the year. A temporary consumer is a seasonal or year-round consumer that demands electric service over a period of less than five years.

(c) Borrowers may assess contributions in aid of construction provided such assessments are consistent with the policy set forth in this section.

[57 FR 1053, Jan. 9, 1992, as amended at 60 FR 67404, Dec. 29, 1995]

§1710.104 Service to non-RE Act beneficiaries.

(a) To the greatest extent practical, loans are limited to providing and improving electric facilities to serve consumers that are RE Act beneficiaries. When it is determined by the Administrator to be necessary in order to furnish or improve electric service in rural areas, loans may, under certain circumstances, be made to finance electric facilities to serve consumers that are not RE Act beneficiaries.

(b) Loan funds may be approved for facilities to serve non-RE Act beneficiaries only if:

(1) The primary purpose of the loan is to furnish or improve service for RE Act beneficiaries; and

(2) The use of loan funds to serve non-RE Act beneficiaries is necessary and incidental to the primary purpose of the loan.

[57 FR 1053, Jan. 9, 1992; 57 FR 4513, Feb. 5, 1992, as amended at 58 FR 66264, Dec. 20, 1993]

§ 1710.105 State regulatory approvals.

(a) In States where a borrower is required to obtain approval of a project or its financing from a state regulatory authority, RUS may require that such approvals be obtained, if feasible for the borrower to do so, before the following types of loans are approved by RUS:

(1) Loans requiring an Environmental Impact Statement;

(2) Loans to finance generation and transmission facilities, when the loan request for such facilities is $25 million or more; and

(3) Loans for the purpose of assisting borrowers to implement demand side management and energy conservation programs and on and off grid renewable energy systems.

(b) At minimum, in the case of all loans in states where state regulatory approval is required of the project or its financing, such state approvals will be required before loan funds are advanced.

(c) In cases where state regulatory authority approval has been obtained, but the borrower has failed to proceed with the project in a timely manner according to the schedule contained in the borrower's project design manual, or if there are cost overruns or other developments that threaten loan feasibility or security, RUS may require the borrower to obtain a reaffirmation of the project and its financing from the state authority before any additional loan funds are advanced.

[57 FR 1053, Jan. 9, 1992; 57 FR 4513, Feb. 5, 1992, as amended at 58 FR 66265, Dec. 20, 1993]

§ 1710.106 Uses of loan funds.

(a) Funds from loans made or guaranteed by RUS may be used to finance:

(1) *Distribution facilities.* (i) The construction of new distribution facilities or systems and the cost of system improvements and removals, less salvage value, needed to meet load growth requirements or improve the quality of service.

(ii) The purchase, rehabilitation and integration of existing distribution facilities and associated service territory when the acquisition is an incidental and necessary means of providing or improving service to persons in rural areas who are not receiving adequate central station service, and the borrower is unable to finance the acquisition from other sources. See § 1710.107.

(2) *Transmission and generation facilities.* (i) The construction of new transmission and generation facilities or systems and the cost of system improvements and removals, less salvage value, needed to meet load growth and improve the quality of service.

(ii) The purchase of an ownership interest in new or existing transmission or generation facilities to serve RE Act beneficiaries.

(3) *Ordinary plant replacements.* The excess of the total cost of ordinary replacements over the original cost of the facilities being replaced, unless financing of the total cost is specifically authorized by the Administrator.

(4) *Warehouse and garage facilities.* The purchase, remodeling, or construction of warehouse and garage facilities required for the operation of a borrower's system. See paragraph (b) of this section.

(5) *Interest.* The payment of interest on indebtedness incurred by a borrower to finance the construction of generation and transmission facilities during the period preceding the date such facilities are placed into service, if requested by the borrower and found necessary by RUS.

(6) Certain costs incurred in demand side management, energy conservation programs and on and off grid renewable energy systems.

(b) In cases of financial hardship, as determined by the Administrator, loans may also be made to finance the following items:

(1) The headquarters office and other headquarters facilities in addition to those cited in paragraph (a)(4) of this section;

(2) General plant equipment, including furniture, office, transportation, data processing and other work equipment; and

(3) Working capital required for the initial operation of a new system.

(c) RUS will not make loans to finance the following:

(1) Electric facilities, equipment, appliances, or wiring located inside the

premises of the consumer, except qualifying items included in a loan for demand side management or energy resource conservation programs, or on or off grid renewable energy systems;

(2) Facilities to serve consumers who are not RE Act beneficiaries unless those facilities are necessary and incidental to providing or improving electric service in rural areas (See § 1710.104);

(3) Any facilities or other purposes that a state regulatory authority having jurisdiction will not approve for inclusion in the borrower's rate base, or will not otherwise allow rates sufficient to repay with interest the debt incurred for the facilities or other purposes; and

(4) Any facilities or other specific purposes that were included in a loan made or guaranteed by RUS that the borrower has prepaid or that has been rescinded.

(d) A distribution borrower may request a loan period of up to 4 years. Except in the case of loans for new generating and associated transmission facilities, a power supply borrower may request a loan period of not more than 4 years for transmission and substation facilities and improvements or replacements of generation facilities. The loan period for new generating facilities is determined on a case by case basis. The loan period for DSM activities will be determined in accordance with § 1710.355. The Administrator may approve a loan period shorter than the period requested by the borrower, if in the Administrator's sole discretion, a loan made for the longer period would fail to meet RUS requirements for loan feasibility and loan security set forth in §§ 1710.112 and 1710.113, respectively.

(e)(1) If, in the sole discretion of the Administrator, the amount authorized for lending for municipal rate loans, hardship rate loans, and loan guarantees in a fiscal year is substantially less than the total amount eligible for RUS financing, RUS may limit the size of all loans of that type approved during the fiscal year. Depending on the amount of the shortfall between the amount authorized for lending and the loan application inventory on hand for each type of loan, RUS may either reduce the amount on an equal proportion basis for all applicants for that type of loan based on the amount of funds for which the applicant is eligible, or may shorten the loan period for which funding will be approved to less than the maximum of 4 years. All applications for the same type of loan approved during a fiscal year will be treated in the same manner, except that RUS will not limit funding to any borrower requesting an RUS loan or loan guarantee of $1 million or less.

(2) If RUS limits the amount of loan funds approved for borrowers, the Administrator shall notify all electric borrowers early in the fiscal year of the manner in which funding will be limited. The portion of the loan application that is not funded during that fiscal year may, at the borrower's option, be treated as a second loan application received by RUS at a later date. This date will be determined by RUS in the same manner for all affected loans and will be based on the availability of loan funds. The second loan application shall be considered complete except that the borrower must submit a certification from a duly authorized corporate official stating that funds are still needed for loan purposes specified in the original application and must notify RUS of any changes in its circumstances that materially affects the information contained in the original loan application or the primary support documents. See 7 CFR 1710.401(f).

(f)(1) For borrowers having one or more loans approved on or after October 1, 1991, advances of funds will be made only for the primary budget purposes included in the loan as shown on RUS Form 740c as amended and approved by RUS, or on a construction work plan or a construction work plan amendment approved by RUS. Each advance will be charged to the oldest outstanding note(s) having unadvanced funds for the primary budget purpose for which the request for advances was made, regardless of whether such notes are associated with loans approved before or after October 1, 1991, unless any conditions on advances under any of these notes have not been met by the borrower.

(2) For borrowers whose most recent loan was approved before October 1,

1991, advances will be made on the oldest outstanding note having unadvanced funds, unless any conditions on advances under such note have not been met by the borrower.

[57 FR 1053, Jan. 9, 1992, as amended at 58 FR 66265, Dec. 20, 1993; 60 FR 3730, Jan. 19, 1995; 62 FR 7922, Feb. 21, 1997]

§ 1710.107 Amount lent for acquisitions.

The maximum amount that will be lent for an acquisition is limited to the value of the property, as determined by RUS. If the acquisition price exceeds this amount, the borrower shall provide the remainder without RUS financial assistance.

§ 1710.108 Mergers and consolidations.

(a) RUS encourages its borrowers to consider merging or consolidating with another electric borrower when such action will contribute to greater operating efficiency and financial soundness.

(b) After a merger or consolidation, RUS will give priority consideration per § 1710.119 to the processing of loans for the surviving system to finance the integration and rehabilitation of electric facilities, if necessary, and the improvement or extension of electric service in rural areas. Such priority consideration will also be given in the case of a borrower that has merged or consolidated with an electric system that has not previously received RUS financial assistance, if such system was serving primarily rural residents at the time of the merger or consolidation and such rural residents will continue to be served by the merged or consolidated system. RUS does not make loans for costs incurred in effectuating mergers or consolidations, such as legal expenses or feasibility study costs.

§ 1710.109 Reimbursement of general funds and interim financing.

(a) Borrowers may request that a loan include funds to reimburse general funds and/or replace interim financing used to finance equipment and facilities that were included in an RUS-approved construction work plan, work plan amendment or other RUS-approved plan, and for which loan funds have not been provided by RUS. Such reimbursement and/or replacement of interim financing may include the direct costs of procurement and construction, as well as the related cost of engineering, architectural, environmental and other studies and plans needed to support the project, when such cost is capitalized as part of the cost of the facilities.

(b) If procurement and/or construction of the equipment and facilities was completed prior to the current loan period, reimbursement, including replacement of interim financing, will be limited, except in cases of extreme financial hardship as determined by the Administrator, to the cost of procurement and construction completed during the period immediately preceding the current loan period, as specified in paragraph (c) of this section. As defined in § 1710.2, the loan period begins on the date shown on page 1 of RUS Form 740c, Cost Estimates and Loan Budget for Electric Borrowers.

(c)(1) The period immediately preceding the current loan period for which reimbursement and replacement of interim financing is authorized under paragraph (b) of this section is as follows:

(i) The number of months agreed to by RUS and the borrower for complete loan applications received by RUS before February 10, 1992;

(ii) 36 months for complete loan applications received from February 10, 1992 through February 10, 1993; or

(iii) 24 months for complete loan applications received after February 10, 1993.

(2) Policies for reimbursement of general funds and interim financing following certain mergers, consolidations, and transfers of systems substantially in their entirety are set forth in 7 CFR 1717.154.

(d) If the reimbursement of general funds and/or replacement of interim financing is for approved expenditures for equipment and facilities whose procurement and/or construction is completed during the current loan period, the time limits of paragraph (c) of this section do not apply.

[57 FR 1053, Jan. 9, 1992, as amended at 58 FR 66265, Dec. 20, 1993; 61 FR 66870, Dec. 19, 1996]

§1710.110 Supplemental financing.

(a) Except in the case of financial hardship as determined by the Administrator, and following certain mergers, consolidations, and transfers of systems substantially in their entirety as set forth in 7 CFR 1717.154, applicants for a municipal rate loan will be required to obtain a portion of their loan funds from a supplemental source without an RUS guarantee, in the amounts set forth in paragraph (c) of this section. RUS will normally grant a lien accommodation to the supplemental lender. RUS does not require supplemental financing in conjunction with an RUS guaranteed loan. However, if a borrower elects to obtain supplemental financing in conjunction with a guaranteed loan, the granting of RUS's loan guarantee may be conditioned on the borrower's obtaining supplemental financing.

(b) The terms and conditions of supplemental financing and any security offered to the supplemental lender are subject to RUS approval. Generally, supplemental loans must have the same final maturity and be amortized in the same manner as RUS loans made concurrently. Borrowers may elect to repay the loans either in substantially equal periodic installments covering interest and principal, or in periodic installments that include interest and level amortization of principal.

(c) *Supplemental financing required for municipal rate loans*—(1) *Distribution borrowers.* (i) Distribution borrowers that had, as of December 31, 1980, an average consumer density of 2 or fewer consumers per mile or an average adjusted plant revenue ratio (APRR), as defined in §1710.2, of over 9.0 shall obtain supplemental financing equal to 10 percent of their loan request.

(ii) All other distribution borrowers must obtain supplemental financing according to their plant revenue ratio (PRR), as defined in §1710.2, based on the most recent year-end data available on the date of loan approval, as follows:

PRR	Supplemental loan percentage
9.00 and above	10
8.01–8.99	20
8.00 and below	30

(iii) If a distribution borrower enters into a merger, consolidation, or transfer of system substantially in its entirety, and the provisions of 7 CFR 1717.154(b) do not apply, required supplemental financing will be determined as follows for loans approved by RUS after December 19, 1996. If one of the merging parties met the criteria in paragraph (c)(1)(i) of this section prior to the effective date of the merger consolidation or transfer, the borrower will be required to obtain supplemental financing equal to 10 percent of any loan funds requested for facilities to serve consumers located in the territory formerly served by the ''paragraph (c)(1)(i)'' borrower. The required amount of supplemental financing for the rest of the loan will be determined according to the provisions of paragraph (c)(1)(ii) of this section.

(2) *Power supply borrowers.* The supplemental loan proportion required of a power supply borrower is based on the simple arithmetic mean of the supplemental loan proportions required of the borrower's distribution members.

(3) *Subsequent loans.* (i) If more than 5 percent of an insured loan made prior to November 1, 1993, or of a municipal rate loan is terminated or rescinded, the amount of supplemental financing required in the borrower's next loan after the rescission for which supplemental financing is required, pursuant to paragraph (a) of this section, will be adjusted to average the actual supplemental financing portion on the terminated or rescinded loan with the supplemental financing portion that would have been required on the new loan according to paragraphs (c)(1) and (2) of this section, in accordance with the formulas set forth in paragraphs (c)(3)(ii) and (iii) of this section.

(ii) If a borrower's supplemental financing requirement as set forth in paragraphs (a), (c)(1), and (c)(2) of this section has not changed between the most recent loan and the loan being considered, then the amount of supplemental financing required for the new loan will be computed as follows:

$$\text{Supplemental financing amount, new loan} = [(A + B) \times C] - D$$

where:

A = The total funds ($) actually advanced from the first loan, including both RUS loan funds and funds from the supplemental loan, plus any unadvanced funds still available to the borrower after the rescission.

B = The total amount ($) for facilities of the new loan request, including both RUS loan funds and funds from supplemental loans.

C = The proportion (%) of supplemental financing required on the loans according to paragraphs (a), (c)(1) and (c)(2) of this section.

D = The amount ($) of supplemental funds actually advanced on the first loan, plus any unadvanced supplemental funds still available to the borrower after the rescission.

(iii) If a borrower's supplemental financing requirement as set forth in paragraphs (a), (c)(1), and (c)(2) of this section has changed between the most recent loan and the loan being considered, then the amount of supplemental financing required for the new loan will be the weighted average of the portions otherwise applicable on the two loans and will be computed as follows:

Supplemental financing amount, new loan = $(A \times C_1)+(B \times C_2)-D$

where:

A = The total funds ($) actually advanced from the first loan, including both RUS loan funds and funds from the supplemental loan, plus any unadvanced funds still available to the borrower after the rescission.

B = The total amount ($) for facilities of the new loan request, including both RUS funds and funds from supplemental loans.

C_1 = The proportion (%) of supplemental financing required on the old loan according to paragraphs (a), (c)(1) and (c)(2) of this section.

C_2 = The proportion (%) of supplemental financing required on the new loan according to paragraphs (a), (c)(1) and (c)(2) of this section.

D = The amount ($) of supplemental funds actually advanced on the first loan, plus any unadvanced supplemental funds still available to the borrower after the rescission.

(d) Supplemental financing will not be required in connection with hardship rate loans. Borrowers that qualify for hardship rate loans but elect to take municipal rate loans instead, will be required to obtain supplemental financing pursuant to this section, unless at the time of loan approval, there are no funds remaining available for hardship loans, in which case supplemental financing will not be required.

[57 FR 1053, Jan. 9, 1992, as amended at 58 FR 66265, Dec. 20, 1993; 60 FR 3730, Jan. 19, 1995; 61 FR 66870, Dec. 19, 1996]

§ 1710.111 Refinancing.

(a) RUS makes loans or loan guarantees to refinance the outstanding indebtedness of borrowers in the following cases:

(1) Loans or loan guarantees to refinance long-term debt owed by borrowers to the Tennessee Valley Authority fpr credit extended under the terms of the Tennessee Valley Authority Act of 1933, as amended.

(2) Loan guarantees made in accordance with the provisions of section 306A of the RE Act to prepay a loan (or any loan advance thereunder) made by the Federal Financing Bank.

(b) In certain circumstances, RUS may make a loan to replace interim financing obtained for the construction of facilities (See § 1710.109).

§ 1710.112 Loan feasibility.

(a) RUS will make a loan only if there is reasonable assurance that the loan, together with all outstanding loans and other obligations of the borrower, will be repaid in full as scheduled, in accordance with the mortgage, notes, and loan contracts. The borrower must provide evidence satisfactory to the Administrator that the loan will be repaid in full as scheduled, and that all other obligations of the borrower will be met.

(b) Based on evidence submitted by the borrower and other information, RUS will use the following criteria to evaluate loan feasibility:

(1) Projections of power requirements, rates, revenues, expenses, margins, and other factors for the present system and proposed additions are based on reasonable assumptions and adequate supporting data and analysis,

including analysis of a range of assumptions for the significant variables, when required by §1710.300(d)(5).

(2) Projected revenues from the rates proposed by the borrower are adequate to meet the required TIER and DSC ratios based on the borrower's total costs, including the projected maximum debt service cost of the new loan.

(3) The economics of the borrower's operations and service area are such that consumers can reasonably be expected to pay the proposed rates required to cover all expenses and meet RUS TIER and DSC requirements, and the borrower can reasonably compete with other utilities and other energy sources to prevent substantial load loss while providing satisfactory service to its consumers.

(4) Risks of possible loss of substantial loads from large consumers or from load concentrations in particular industries will not substantially impair loan feasibility.

(5) Risks of loss of portions of the borrower's service territory from annexation or other causes will not substantially impair loan feasibility. If there appears to be a substantial risk, RUS may require additional information from the borrower, such as a summary and analysis of the risk by the borrower; state, county or local planning reports having information on projected growth or expansion plans of local communities; annexation plans of the municipalities in question; and any other relevant information.

(6) In states where rates or investment decisions are subject to approval by state regulatory authorities, there is reasonable expectation that such approvals will be forthcoming to enable repayment of the loan in full according to its terms.

(7) The experience and performance of the system's management is acceptable.

(8) In the case of joint ventures, the borrower has sufficient management control or other contractual safeguards with respect to the construction and operation of the jointly owned facility to ensure that the borrower's interests are protected and the credit risk is minimized.

(9) The borrower has implemented adequate financial and management controls and there are and have been no significant financial or other irregularities.

(10) The borrower's projected capitalization, measured by its equity as a percentage of total assets, is adequate to enable the borrower to meet its financial needs and to provide service consistent with the RE Act. Among the factors to be considered in reviewing the borrower's projected capitalization are the economic strength of the borrower's service territory, the inherent cost of providing service to the territory, the disparity in rates between the borrower and neighboring utilities, the intensity of competition faced by the borrower from neighboring utilities and other power sources, and the relative amount of new capital investment required to serve existing or new loads.

[57 FR 1053, Jan. 9, 1992; 57 FR 4513, Feb. 5, 1992, as amended at 60 FR 3731, Jan. 19, 1995]

§1710.113 Loan security.

(a) RUS makes loans only if, in the judgment of the Administrator, the security therefor is reasonably adequate and the loan will be repaid according to its terms within the time agreed.

(b) RUS generally requires that borrowers provide it with a first lien on all of the borrower's real and personal property, including intangible personal property and any property acquired after the date of the loan. This lien shall be in the form of a mortgage by the borrower to the Government or a deed of trust between the borrower and a trustee satisfactory to the Administrator, together with such security documents as RUS may deem necessary in a particular case.

(c)(1) When a borrower is unable by reason of preexisting encumbrances, or otherwise, to furnish a first mortgage lien on its entire system the Administrator may accept other forms of security, such as a pledge of revenues, if he or she determines such security is reasonably adequate and the form and nature thereof is otherwise acceptable.

(2) The Administrator, at his or her discretion, may approve the use of an indenture patterned after those indentures commonly used by utilities engaged in private market financing, in

lieu of a mortgage as the security instrument for loans to power supply borrowers. The use of an indenture will be by mutual agreement of the borrower and the Administrator. The terms of each indenture and related loan agreement will be negotiated on a case by case basis to best meet the needs of the individual borrower and the Government. The provisions of the indenture and loan contract shall control, notwithstanding any provisions of 7 CFR Chapter XVII which may be in conflict therewith.

(d) In the case of loans that include the financing of electric facilities that are operated as an integral component of a non-RUS financed system (such as generation and transmission facilities co-owned with other electric utilities), the borrower shall, in addition to the mortgage lien on all of the borrower's electric facilities, furnish adequate assurance, in the form of contractual or other security arrangements, that the system will be operated on an efficient and continuous basis. Satisfactory evidence must also be provided that the non-RUS financed system is financially sound and under capable management. Examples of such evidence include financial reports, annual reports, Security and Exchange Commission 10K reports if the system is required to file them, credit reports from Standard and Poor's, Moodys or other recognized sources, reports to state regulatory authorities and the Federal Energy Regulatory Commission, and evidence of a successful track record in related construction projects.

(e) Additional controls on the borrower's financial, investment and managerial activities appear in the loan contract and mortgage required by RUS.

[57 FR 1053, Jan. 9, 1992, as amended at 62 FR 7665, Feb. 20, 1997]

§ 1710.114 TIER, DSC, OTIER and ODSC requirements.

(a) *General.* Requirements for coverage ratios are set forth in the borrower's mortgage, loan contract, or other contractual agreements with RUS. The requirements set forth in this section apply to borrowers that receive a loan approved by RUS on or after February 10, 1992. Nothing in this section, however, shall reduce the coverage ratio requirements of a borrower that has contractually agreed with RUS to a higher requirement.

(b) *Coverage ratios.* (1) Distribution borrowers. The minimum coverage ratios required of distribution borrowers, whether applied on an annual or average basis, are a TIER of 1.50, DSC of 1.25, OTIER of 1.1, and ODSC of 1.1. OTIER and ODSC shall apply to distribution borrowers that receive a loan approved by RUS on or after January 29, 1996.

(2) The minimum coverage ratios required of power supply borrowers, whether applied on an annual or average basis, are a TIER of 1.05 and DSC of 1.00.

(3) When new loan contracts are executed, the Administrator may, case by case, increase the coverage ratios of distribution and power supply borrowers above the levels cited in paragraphs (b)(1) and (b)(2), respectively, of this section if the Administrator determines that the higher ratios are required to ensure reasonable security for and/or the repayment of loans made or guaranteed by RUS. Also, the Administrator may, case by case, reduce said coverage ratios if the Administrator determines that the lower ratios are required to ensure reasonable security for and/or the repayment of loans made or guaranteed by RUS. Policies for coverage ratios following certain mergers, consolidations, and transfers of systems substantially in their entirety are in 7 CFR 1717.155.

(4) If a distribution borrower has in service or under construction a substantial amount of generation and associated transmission plant financed at a cost of capital substantially higher than the cost of funds under section 305 of the RE Act, then the Administrator may establish, in his or her sole discretion, blended levels for TIER, DSC, OTIER, and ODSC based on the respective shares of total utility plant represented by said generation and associated transmission plant and by distribution and other transmission plant.

(c) *Requirements for loan feasibility.* To be eligible for a loan, borrowers must demonstrate to RUS that they will, on a pro forma basis, earn the coverage ratios required by paragraph (b) of this

section in each of the years included in the borrower's long-range financial forecast prepared in support of its loan application, as set forth in subpart G of this part.

(d) *Requirements for maintenance of coverage ratios*—(1) *Prospective requirement.* Borrowers must design and implement rates for utility service to provide sufficient revenue (along with other revenue available to the borrower in the case of TIER and DSC) to pay all fixed and variable expenses, to provide and maintain reasonable working capital and to maintain on an annual basis the coverage ratios required by paragraph (b) of this section. Rates must be designed and implemented to produce at least enough revenue to meet the requirements of this paragraph under the assumption that average weather conditions in the borrower's service territory will prevail in the future, including average system damage and outages due to weather and the related costs. Failure to design and implement rates pursuant to the requirements of this paragraph shall be an event of default upon notice provided in accordance with the terms of the borrower's mortgage or loan contract.

(2) *Retrospective requirement.* The average coverage ratios achieved by a borrower in the 2 best years out of the 3 most recent calendar years must meet the levels required by paragraph (b) of this section. If a borrower fails to achieve these average levels, it must promptly notify RUS in writing. Within 30 days of such notification or of the borrower being notified in writing by RUS, whichever is earlier, the borrower, in consultation with RUS, must provide a written plan satisfactory to RUS setting forth the actions that will be taken to achieve the required coverage ratios on a timely basis. Failure to develop and implement a plan satisfactory to RUS shall be an event of default upon notice provided in accordance with the terms of the borrower's mortgage or loan contract.

(3) *Fixed and variable expenses,* as used in this section, include but are not limited to: all taxes, depreciation, maintenance expenses, and the cost of electric power and energy and other operating expenses of the electric system, including all obligations under the wholesale power contract, all lease payments when due, and all principal and interest payments on outstanding indebtedness when due.

(e) *Requirements for advance of funds.* (1) If a borrower applying for a loan has failed to achieve the coverage ratios required by paragraph (b) of this section during the latest 12 month period immediately preceding approval of the loan, or if any of the borrower's average coverage ratios for the 2 best years out of the most recent 3 calendar years were below the levels required in paragraph (b) of this section, RUS may withhold the advance of loan funds until the borrower has adopted an annual financial plan and operating budget satisfactory to RUS and taken such other action as RUS may require to demonstrate that the required coverage ratios will be maintained in the future and that the loan will be repaid with interest within the time agreed. Such other action may include, for example, increasing system operating efficiency and reducing costs or adopting a rate design that will achieve the required coverage ratios, and either placing such rates into effect or taking action to obtain regulatory authority approval of such rates. If failure to achieve the coverage ratios is due to unusual events beyond the control of the borrower, such as unusual weather, system outage due to a storm or regulatory delay in approving rate increases, then the Administrator may waive the requirement that the borrower take the remedial actions set forth in this paragraph, provided that such waiver will not threaten loan feasibility.

(2) With respect to any outstanding loan approved by RUS on or after February 10, 1992, if, based on actual or projected financial performance of the borrower, RUS determines that the borrower may not achieve its required coverage ratios in the current or future years, RUS may withhold the advance of loan funds until the borrower has taken remedial action satisfactory to RUS.

[60 FR 67404, Dec. 29, 1995, as amended at 61 FR 66871, Dec. 19, 1996]

§ 1710.115 Final maturity.

(a) RUS is authorized to make loans and loan guarantees with a final maturity of up to 35 years. The borrower may elect a repayment period for a loan not longer than the expected useful life of the facilities, not to exceed 35 years. Most of the electric facilities financed by RUS have a long useful life, often approximating 35 years. Some facilities, such as load management equipment and Supervisory Control and Data Acquisition equipment, have a much shorter useful life due, in part, to obsolescence. Operating loans to finance working capital required for the initial operation of a new system are a separate class of loans and usually have a final maturity of less than 10 years.

(b) Loans made or guaranteed by RUS for facilities owned by the borrower generally must be repaid with interest within a period, up to 35 years, that approximates the expected useful life of the facilities financed. The expected useful life shall be based on the weighted average of the useful lives that the borrower proposes for the facilities financed by the loan, provided that the proposed useful lives are deemed appropriate by RUS. RUS Form 740c, Cost Estimates and Loan Budget for Electric Borrowers, submitted as part of the loan application must include, as a note, either a statement certifying that at least 90 percent of the loan funds are for facilities that have a useful life of 33 years or longer, or a schedule showing the costs and useful life of those facilities with a useful life of less than 33 years. The useful lives proposed by the borrower for the facilities financed must be consistent with the borrower's proposed depreciation rates for these facilities. In states where the borrower must obtain state regulatory authority approval of depreciation rates for rate making purposes, the depreciation rates used for the purposes of this paragraph shall be the rates currently approved by the state authority or rates for which the borrower plans to seek state authority approval, provided that these rates are deemed appropriate by RUS. In other states, if the rates proposed by the borrower are not deemed appropriate by RUS, RUS will base expected useful life on the depreciation rates listed in Bulletin 183–1, or its successor, revising such rates as necessary to reflect current industry practice (for availability of bulletins, see § 1710.5.). Final maturities for loans for the implementation of programs for demand side management and energy resource conservation and on and off grid renewable energy sources not owned by the borrower will be determined by RUS. Due to the uncertainty of predictions over an extended period of time, RUS may add up to 2 years to the composite average useful life of the facilities in order to determine final maturity.

(c) [Reserved]

(d) The Administrator may approve a repayment period longer than the expected useful life of the facilities financed, up to 35 years, if a longer final maturity is required to ensure repayment of the loan and loan security is adequate.

(e) The final maturity of a loan established pursuant to the provisions of this section shall not be extended as a result of extending loan payments under section 12(a) of the RE Act.

[58 FR 66265, Dec. 20, 1993, as amended at 60 FR 3731, Jan. 19, 1995]

§ 1710.116 [Reserved]

§ 1710.117 Environmental considerations.

Borrowers are required to comply with 7 CFR part 1794, which sets forth applicable requirements of the National Environmental Policy Act (NEPA), as amended (42 U.S.C. 4321 *et seq.*); the Council on Environmental Quality Regulations for Implementing the Procedural Provisions of NEPA (40 CFR parts 1500–1508); and certain other statutes, regulations and orders. Borrowers must also comply with any other applicable Federal or state environmental laws and regulations.

§ 1710.118 [Reserved]

§ 1710.119 Loan processing priorities.

(a) Generally loans are processed in chronological order based on the date the complete application is received in the Regional office.

(b) The Administrator may give priority to processing loans that are required to meet the following needs:

(1) To restore electric service following a major storm or other catastrophe;

(2) To bring existing electric facilities into compliance with any environmental requirements imposed by Federal or state law that were not in effect at the time the facilities were originally constructed;

(3) To finance the capital needs of borrowers that are the result of a merger, consolidation, or a transfer of a system substantially in its entirety, provided that the merger, consolidation, or transfer has either been approved by RUS or does not need RUS approval pursuant to the borrower's loan documents (See 7 CFR 1717.154); or

(4) To correct serious safety problems, other than those resulting from borrower mismanagement or negligence.

(c) The Administrator may also change the normal order of processing loan applications when it is necessary to ensure that all loan authority for the fiscal year is utilized.

[57 FR 1053, Jan. 9, 1992, as amended at 61 FR 66871, Dec. 19, 1996]

§1710.120 Construction standards and contracting.

Borrowers shall follow all RUS requirements regarding construction work plans, construction standards, approved materials, construction and related contracts, inspection procedures, and bidding procedures.

§1710.121 Insurance requirements.

Borrowers are required to comply with certain requirements with respect to insurance and fidelity coverage as set forth in 7 CFR part 1788.

§1710.122 Equal opportunity and nondiscrimination.

Borrowers are required to comply with certain regulations on nondiscrimination in program services and benefits and on equal employment opportunity as set forth in RUS Bulletins 20–15 and 20–19 or their successors; 7 CFR parts 15 and 15b; and 45 CFR part 90.

§1710.123 Debarment and suspension.

Borrowers are required to comply with certain requirements on debarment and suspension as set forth in 7 CFR part 3017.

§1710.124 Uniform Relocation Act.

Borrowers are required to comply with applicable provisions of 49 CFR part 24, which sets forth the requirements of the Uniform Relocation Assistance and Real Property Acquisition Policy Act of 1970 (Pub. L. 91–646; 84 Stat. 1894), as amended by the Uniform Relocation Act Amendments of 1987 (Pub. L. 100–17; 101 Stat. 246–256) and the Intermodal Surface Transportation Efficiency Act of 1991.

§1710.125 Restrictions on lobbying.

Borrowers are required to comply with certain requirements with respect to restrictions on lobbying activities. See 7 CFR part 3018.

§1710.126 Federal debt delinquency.

(a) Prior to approval of a loan or advance of funds, a borrower must report to RUS whether or not it is delinquent on any Federal debt, such as Federal income tax obligations or a loan or loan guarantee from another Federal agency. If delinquent, the reasons for the delinquency must be explained, and RUS will take such explanation into consideration in deciding whether to approve the loan or advance of funds.

(b) Applicants for a loan or loan guarantee must also certify that they have been informed of the collection options the Federal government may use to collect delinquent debt.

§1710.127 Drug free workplace.

Borrowers are required to comply with the Drug Free Workplace Act of 1988 (Pub. L. 100–690, title V, subtitle D) and the Act's implementing regulations (7 CFR part 3017) when a borrower receives a Federal grant or enters into a procurement contract awarded pursuant to the provisions of the Federal Acquisition Regulation (title 48 CFR) to sell to a Federal agency property or services having a value of $25,000 or more.

§§ 1710.128—1710.149 [Reserved]

Subpart D—Basic Requirements for Loan Approval

§ 1710.150 General.

The RE Act and prudent lending practice require that the Administrator make certain findings before approving an electric loan or loan guarantee. The borrower shall provide the evidence determined by the Administrator to be necessary to make these findings.

§ 1710.151 Required findings for all loans.

(a) *Area coverage.* Adequate electric service will be made available to the widest practical number of rural users in the borrower's service area during the life of the loan. See § 1710.103.

(b) *Feasibility.* The loan is feasible and it will be repaid on time according to the terms of the mortgage, note, and loan contract. At any time after the original determination of feasibility, the Administrator may require the borrower to demonstrate that the loan remains feasible if there have been, or are anticipated to be, material changes in the borrower's costs, loads, rates, rate disparity, revenues, or other relevant factors from the time that feasibility was originally determined. See § 1710.112 and subpart G of this part.

(c) *Security.* RUS will have a first lien on the borrower's total system or other adequate security, and adequate financial and managerial controls will be included in loan documents. See § 1710.113.

(d) *Interim financing.* For loans that include funds to replace interim financing, there is satisfactory evidence that the interim financing was used for purposes approved by RUS and that the loan meets all applicable requirements of this part.

(e) *Facilities for nonrural areas.* Whenever a borrower proposes to use loan funds for the improvement, expansion, construction, or acquisition of electric facilities for non-RE Act beneficiaries, there is satisfactory evidence that such funds are necessary and incidental to furnishing or improving electric service for RE Act beneficiaries. See § 1710.104.

(f) *Facilities to be included in rate base.* In states having jurisdiction, the borrower has provided satisfactory evidence based on the information available, such as an opinion of counsel, that the state regulatory authority will not exclude from the borrower's rate base any of the facilities included in the loan request, or otherwise prevent the borrower from charging rates sufficient to repay with interest the debt incurred for the facilities. Such evidence may be based on, but not necessarily limited to, the provisions of applicable state laws; the rules and policies of the state authority; precedents in other similar cases; statements made by the state authority; any assurances given to the borrower by the state authority; and other relevant information and experience.

§ 1710.152 Primary support documents.

The following primary support documents and studies must be prepared by the borrower for approval by RUS in order to support a loan application:

(a) *Power requirements study (PRS).* This study provides the borrower and RUS with an understanding of the borrower's system loads, the factors influencing those loads, and valid estimates of future loads. It provides a basis for projecting annual kWh sales and revenues, and for engineering estimates of plant additions required to accommodate the forecasted loads. The requirements for a PRS and the circumstances under which one must be submitted to RUS are set forth in subpart E of this part.

(b) *Construction work plan (CWP).* The CWP shall specify and document the capital investments required to serve a borrower's planned new loads, improve service reliability and quality, and service the changing needs of existing loads. The requirements for a CWP are set forth in subpart F of this part.

(c) *Long-range financial forecasts.* RUS encourages borrowers to maintain on a current basis a long-range financial forecast, which should be used by a borrower's board of directors and manager to guide the system toward its financial goals. The forecast submitted in support of a loan application shall show the projected results of future actions planned by the board of directors.

The requirements for a long-range financial forecast are set forth in subpart G of this part.

(d) *Borrower's environmental report (BER).* This document is used to determine what effect the construction of the facilities included in the construction work plan will have on the environment. In developing a BER a borrower shall follow the policy and procedural requirements set forth in 7 CFR part 1794. After reviewing the BER, RUS will determine whether additional environmental studies will be required.

§1710.153 Additional requirements and procedures.

Additional requirements and procedures for obtaining RUS financial assistance are set forth in 7 CFR part 1712 for loan guarantees, and in 7 CFR part 1714 for insured loans.

§§1710.154—1710.199 [Reserved]

Subpart E—Power Requirements Studies

§1710.200 Purpose.

This subpart sets forth the policies, procedures and criteria for the preparation, approval and use of power requirements studies (PRSs) and PRS work plans. A PRS is a thorough study of a borrower's electric loads and the factors that affect those loads in order to determine, as accurately as practicable, the borrower's future requirements for energy and capacity. The PRS of a power supply borrower includes and integrates the PRSs of its member systems.

§1710.201 Requirement to prepare a PRS—power supply borrowers.

(a) A power supply borrower having total assets of $300 million or more shall:

(1) Meet one of the following two requirements:

(i) Prepare and obtain RUS approval of a new PRS not less frequently than every 3 years, which shall include new or revised equations and models, and annually update the PRS in the intervening years based on new data and assumptions, but not necessarily new or revised equations and models, and file the annual updates with RUS; or

(ii) Prepare and obtain RUS approval of a new PRS not less frequently than every 2 years, which shall include new or revised equations and models;

(2) Maintain a current PRS work plan approved by RUS which shall set forth the resources, methods, schedules and milestones required for the preparation and maintenance of the PRS; and

(3) Provide a current PRS approved by RUS in support of any request for RUS financial assistance or for RUS approval of long-term power contracts or other actions as appropriate.

(b) A power supply borrower with total assets of less than $300 million is not required to have a current, RUS-approved PRS on an ongoing basis but is required to provide a current, RUS-approved PRS in support of:

(1) An application for an RUS loan or loan guarantee if said loan or guarantee exceeds $25 million or 10 percent of the borrower's total utility plant, whichever is smaller; and

(2) Requests for RUS approval of long-term power contracts or other actions, as may be required by RUS on a case by case basis.

(c) A power supply borrower that is a member of another power supply borrower that has total assets of $300 million or more is subject to the requirements of §1710.201(a), except that such member is not required to have a separate PRS work plan. The distribution members of such a power supply borrower are also subject to the requirements of §1710.201(a), except that such members are not required to have separate PRS work plans.

(d) At the borrower's request, RUS may extend for up to 3 months the time frames set forth in §1710.201(a)(1) if RUS determines the borrower is in substantial compliance with its RUS-approved work plan and significant changes in existing PRS models and assumptions are not required.

(e) For purposes of paragraphs (a)(3) and (b) of this section, the determination of whether a borrower's PRS is current will be made by RUS at the time financial assistance or other RUS action is requested. The borrower may be required to update the PRS to incorporate the most recently available operating data and other information.

§ 1710.202 Requirement to prepare a PRS—distribution borrowers.

(a) If a distribution borrower is a member of a power supply borrower that has total assets of $300 million or more, it must meet the requirements of § 1710.201(a), except for the requirement to prepare a work plan, which is the responsibility of the power supply borrower. Certain other distribution borrowers, as set forth in § 1710.201(c), are also subject to provisions of § 1710.201(a).

(b) All other distribution borrowers, including unaffiliated distribution systems as well as members of power supply borrowers with total assets of less than $300 million, must either:

(1) Meet the requirements of § 1710.201(a), if the distribution borrower owns generation and bulk transmission plant valued at $300 million or more, or

(2) Meet the requirements of § 1710.201(b), except that the loan threshold set forth in paragraph (b)(1) in the case of these distribution borrowers shall be $3 million and 10 percent of total utility plant.

§ 1710.203 Basic policies and requirements for a PRS.

(a) A PRS or PRS update must be completed and submitted to RUS on a timely basis to enable prompt review by RUS.

(b) A PRS completed more than 12 months prior to submission will not be considered by RUS.

(c) Adequate coordination is required between power supply borrowers and their members in the preparation of their respective PRSs or PRS updates.

(d) To facilitate RUS review of the PRS work plan and the PRS, the borrower shall make available to RUS appropriate staff for consultation, and all essential documentation, data, and other relevant information, in formats acceptable to RUS, that support the PRS work plan and the PRS.

(e) Notwithstanding any other provisions of this subpart, any power supply or distribution borrower may be required to prepare a new or updated PRS, or to maintain a current PRS on an ongoing basis, if required for RUS to determine loan feasibility, to ensure loan security, or to consider requests submitted for approval under a borrower's loan contract or mortgage.

(f) All PRSs shall include the following information, using a format approved by RUS, unless such information has already been provided to RUS in the PRS work plan or other submissions:

(1) A discussion of the scope of the PRS, including the proposed uses of the information developed for planning load management and energy efficiency programs, plant investments, and financial requirements;

(2) A discussion of the borrower personnel, consultants, data, and other resources used in the preparation of the PRS;

(3) A discussion of the procedures used to collect, validate, process, and update the data used in the study;

(4) Documentation of the analysis and modeling of the borrower's electric system loads and other pertinent information used in the PRS. All relevant data, primary sensitivity analyses and other substantive procedures used to test significant assumptions and to generate the load estimates and related factors must be included in the PRS or otherwise made available to RUS, and clearly identified, sourced and dated;

(5) An analysis of the borrower's past, existing, and future electric system loads of RE Act beneficiaries and others, including explanation and documentation of all substantive assumptions, primary sensitivity analyses and other substantive considerations used to prepare the estimates. Areas of analysis shall normally include, but are not limited to: developing land use patterns; potential losses of load due to annexation or other causes; prospective residential and commercial development; probable rate levels; the effects of rates and competition from neighboring utilities on loads; existing and anticipated patterns of energy usage and appliance saturation; and availability of alternative energy sources. Load management, conservation, and power marketing considerations must also be included;

(6) A discussion and analysis of alternative scenarios, which shall be required for all PRSs submitted to RUS for approval after January 1, 1993. Normally, unless waived by RUS under

§1710.206, the borrower shall provide a discussion and analysis of the following five scenarios:

(i) Most-probable economic assumptions, with normal weather;

(ii) Most-probable economic assumptions, with severe weather causing higher loads;

(iii) Most-probable economic assumptions, with mild weather causing lower loads;

(iv) Normal weather with more pessimistic macroeconomic assumptions causing lower loads; and

(v) Normal weather with more optimistic macroeconomic assumptions causing higher loads;

(7) Completed RUS Forms 341 and 345 and 10 years data from RUS Form 7 part R. Computer-generated facsimiles may be used if acceptable in form to RUS. Graphs, tables, spreadsheets or other exhibits shall be included as appropriate;

(8) A discussion and documentation of the coordination activities between a power supply borrower and its RUS-borrower members, as applicable, and between the borrower and RUS. If a power supply borrower and any member disagree on an issue or estimate, RUS will provide assistance, if requested, in attempting to resolve the disagreement;

(9) The borrower's general manager's recommendation to the board of directors on adoption of the PRS; and

(10) Approval of the PRS by the borrower's board of directors.

(g) A PRS and its essential supporting data and analysis shall be retained in the borrower's records until the next new PRS is approved by RUS.

(h) Completed PRSs submitted to RUS for approval prior to the effective date of this part, as well as PRSs prepared under work plans approved by RUS prior to the effective date of this part, may meet the requirements of paragraph (f) of this section or corresponding requirements of RUS Bulletin 120–1, at the option of the borrower. All other PRSs must meet the requirements of paragraph (f) of this section.

§1710.204 PRS work plan requirements.

(a) All borrowers required to prepare and maintain a PRS on an ongoing basis are required to prepare and obtain RUS approval of a PRS work plan, except for those borrowers that are members of a power supply borrower that is required to prepare a PRS work plan. The PRS work plan shall establish the resources, methods, schedules, and milestones to be used in the preparation and maintenance of the PRS.

(b) A power supply borrower's work plan shall include the member inputs and coordination mechanisms required for the preparation of its PRS as well as the PRSs of the system's members. Member concurrences in the work plan are required before the plan is submitted to RUS for approval. The member systems, as well as the power supply borrower, are required to follow the work plan in preparing their respective PRS.

(c) A PRS work plan must be approved by the borrower's board of directors.

(d) A borrower may amend its work plan subject to RUS approval. A new or revised work plan may be required by RUS if RUS concludes the existing plan will not result in a satisfactory PRS on a timely basis.

(e) In addition, a PRS work plan shall:

(1) Identify the borrower and, as applicable, member personnel that will serve as project leaders or liaisons with the authority to make decisions and commit resources within the scope of the work plan;

(2) Provide for residential consumer surveys at least every 3 years to obtain data on appliance and equipment saturation and electricity demand, when residential demand is 50 percent or more of total kWh sales. In the case of a power supply borrower, such surveys shall be coordinated with the borrower's members. They may be based on the aggregation of member-based samples or on a system-wide sample, provided that the latter provides for relevant regional breakdowns as appropriate;

(3) Provide for all other data collection and verification, analyses, modeling, and documentation required in § 1710.203; and

(4) Provide for an ongoing RUS review of the PRS.

(f) Generally, a work plan shall cover a period of 1 to 3 years.

[57 FR 1053, Jan. 9, 1992; 57 FR 4513, Feb. 5, 1992]

§ 1710.205 Basic criteria for RUS approval of a PRS.

RUS will use the following basic criteria in deciding whether to approve a PRS:

(a) The borrower objectively analyzed all relevant factors that influence the consumption of electricity and the requirements for generation and transmission capacity;

(b) The borrower accurately analyzed power requirements stemming from RE Act beneficiaries and non-RE Act beneficiaries;

(c) The borrower developed adequate supporting data, used valid assumptions, analyzed a reasonable range of relevant alternative assumptions and scenarios, and used valid and verifiable analytical techniques and models;

(d) The borrower provided RUS with adequate documentation and assistance to allow for a thorough and independent review;

(e) In the case of a power supply borrower, the preparation of the work plan and PRS was adequately coordinated with its members; and

(f) The PRS was recommended for approval by the borrower's general manager and has been approved by the borrower's board of directors.

§ 1710.206 Waiver of borrower requirements.

For good cause shown by the borrower, the Administrator may waive any of the requirements applicable to borrowers in this subpart if the Administrator determines that waiving the requirement will not significantly affect accomplishment of the objectives of this subpart and if the requirement imposes a substantial burden on the borrower. The waiver must be requested in writing by the borrower's general manager.

(Approved by the Office of Management and Budget under control number 0572–0032)

§§ 1710.207—1710.249 [Reserved]

Subpart F—Construction Work Plans and Related Studies

§ 1710.250 General.

(a) An ongoing, integrated planning system is needed by borrowers to determine their short-term and long-term needs for plant additions, improvements, replacements, and retirements. The primary components of the system consist of long-range engineering plans, construction work plans (CWPs), CWP amendments, and special engineering and cost studies. Long range engineering plans identify plant investments required over a period of 10 years or more. CWPs specify and document plant requirements for the short-term, usually 2 to 3 years, and special engineering and cost studies are used to support CWPs and to identify and document requirements for specific items or purposes, such as load management equipment, System Control and Data Acquisition equipment, sectionalizing investments, and additions of generation capacity and associated transmission plant.

(b) Generally, all borrowers are required to maintain up-to-date long range engineering plans approved by their boards of directors. Current CWPs approved by the borrower's board must also be developed and maintained for distribution and transmission facilities and for improvements and replacements of generation facilities. All such distribution, transmission or generation facilities must be included in the respective CWPs regardless of the source of financing.

(c) A long range engineering plan specifies and supports the major system additions, improvements, replacements, and retirements needed for an orderly transition from the existing system to the system required 10 or more years in the future. The planned future system should be based on the most technically and economically sound means of serving the borrower's

long-range loads in a reliable and environmentally acceptable manner, and it should ensure that planned facilities will not become obsolete prematurely.

(d) A CWP shall include investment cost estimates and supporting engineering and cost studies to demonstrate the need for each proposed facility or activity and the reasonableness of the investment projections and the engineering assumptions used in sizing the facilities. The CWP must be consistent with the borrower's long range engineering plan and both documents must be consistent with the borrower's RUS-approved power requirements study.

(e) Applications for a loan or loan guarantee from RUS (new loans or budget reclassifications) must be supported by a current CWP approved by both the borrower's board of directors and RUS. RUS approval of these plans relates only to the facilities, equipment, and other purposes to be financed by RUS, and means that the plans provide an adequate basis from a planning and engineering standpoint to support RUS financing. RUS approval of the plans does not mean that RUS approves of the facilities, equipment, or other purposes for which the borrower is not seeking RUS financing. If RUS disagrees with a borrower's estimate of the cost of one or more facilities for which RUS financing is sought, RUS may adjust the estimate after consulting with the borrower and explaining the reasons for the adjustment.

(f) Except as provided in paragraph (g) of this section, to be eligible for RUS financing, the facilities, including equipment and other items, included in a CWP must be approved by RUS before the start of construction. This requirement also applies to any amendments to a CWP required to add facilities to a CWP or to make significant physical changes in the facilities already included in a CWP.

(g) In the case of damage caused by storms and other natural catastrophes, a borrower may proceed with emergency repair work before a CWP or CWP amendment is prepared by the borrower and approved by RUS, without loosing eligibility for RUS financing of the repairs. The borrower must notify the RUS regional office in writing, not later than 45 days after the natural catastrophe, of its preliminary estimates of damages and repair costs. Not later than 120 days after the natural catastrophe, the borrower must submit to RUS for approval, a CWP or CWP amendment detailing the repairs.

(h) A CWP may be amended or augmented when the borrower can demonstrate the need for the changes.

(i) A borrower's CWP or special engineering studies must be supported by a Borrower's Environmental Report, and when necessary by an Environmental Analysis or Environmental Impact Statement, as set forth in 7 CFR 1794 or required by other Federal or state regulations or laws.

(j) All engineering activities required by this subpart must be performed by qualified engineers, who may be staff employees of the borrower or outside consultants.

(k) Upon written request from a borrower, RUS may waive in writing certain requirements with respect to long-range engineering plans and CWPs if RUS determines that such requirements impose a substantial burden on the borrower and that waiving the requirements will not significantly affect the accomplishment of the objectives of this subpart. For example, if a borrower's load is forecast to remain constant or decline during the planning period, RUS may waive those portions of the plans that relate to load growth.

[57 FR 1053, Jan. 9, 1992; 57 FR 4513, Feb. 5, 1992, as amended at 60 FR 67405, Dec. 29, 1995]

§1710.251 Construction work plans—distribution borrowers.

(a) All distribution borrowers must maintain a current CWP approved by their board of directors covering all new construction, improvements, replacements, and retirements of distribution and transmission plant, and improvements replacements, and retirements of any generation plant. Construction of new generation capacity need not be included in a CWP but must be specified and supported by specific engineering and cost studies. (See § 1710.253.)

(b) A distribution borrower's CWP shall cover a construction period of between 2 and 4 years, and include all facilities to be constructed which are eligible for RUS financing, whether or not RUS financial assistance will be sought or be available for certain facilities. Any RUS financing provided for the facilities will be limited to a 4 year loan period. The construction period covered by a CWP in support of a loan application shall not be shorter than the loan period requested for financing of the facilities.

(c) The facilities, equipment and other items included in a distribution borrower's CWP may include:

(1) Line extensions required to connect consumers, improve service reliability or improve voltage conditions;

(2) Distribution tie lines to improve reliability of service and voltage regulation;

(3) Line conversions and changes required to improve existing services or provide additional capacity for new consumers;

(4) New substation facilities or additions to existing substations;

(5) Transmission and substation facilities required to support the distribution system;

(6) Distribution equipment required to serve new consumers or to provide adequate and dependable service to existing consumers, including replacement of existing plant facilities;

(7) Residential security lights;

(8) Communications equipment and meters;

(9) Headquarters facilities;

(10) Improvements, replacements, and retirements of generation facilities;

(11) Load management equipment, automatic sectionalizing facilities, and centralized System Control and Data Acquisition equipment. Load management equipment eligible for financing, including the related costs of installation, is limited to capital equipment designed to influence the time and manner of consumer use of electricity, which includes peak clipping and load shifting. To be eligible for financing, such equipment must be owned by the borrower, although it may be located inside or outside a consumer's premises; and

(12) The cost of engineering, architectural, environmental and other studies and plans needed to support the construction of facilities, when such cost is capitalized as part of the cost of the facilities.

[57 FR 1053, Jan. 9, 1992; 57 FR 4513, Feb. 5, 1992, as amended at 60 FR 3731, Jan. 19, 1995; 60 FR 67405, Dec. 29, 1995]

§ 1710.252 Construction work plans—power supply borrowers.

(a) All power supply borrowers must maintain a current CWP approved by the borrower's board of directors covering all new construction, improvements, replacements, and retirements of distribution and transmission plant, and improvements, replacements, and retirements of generation plant. Applications for RUS financial assistance for such facilities must be supported by a current, RUS-approved CWP. Construction of new generation capacity need not be included in a CWP but must be specified and supported by specific engineering and cost studies.

(b) Normally a power supply borrower's CWP shall cover a period of 3 to 4 years. While comprehensive CWP's are desired, if there are extenuating circumstances RUS may accept a single-purpose transmission or generation CWP in support of a loan application or budget reclassification. The construction period covered by a CWP in support of a loan application shall not be shorter than the loan period requested for financing of the facilities.

(c) Facilities, equipment, and other items included in a power supply borrower's CWP may include:

(1) Distribution and related facilities as set forth in § 1710.251(c);

(2) Transmission facilities required to deliver the power needed to serve the existing and planned new loads of the borrower and its members, and to improve service reliability, including tie lines for improved reliability of service, line conversions, improvements and replacements, new substations and substation improvements and replacements, and Systems Control and Data Acquisition equipment, including communications, dispatching and sectionalizing equipment, and load management equipment;

(3) The borrower's proportionate share of transmission facilities required to tie together the operating systems of supporting power pools and to connect with adjacent power suppliers;

(4) Improvements and replacements of generation facilities; and

(5) The cost of engineering, architectural, environmental and other studies and plans needed to support the construction of facilities, when such cost is capitalized as part of the cost of the facilities.

(d) A CWP for transmission facilities shall normally include studies of load flows, voltage regulation, and stability characteristics to demonstrate system performance and needs.

[57 FR 1053, Jan. 9, 1992, as amended at 60 FR 3731, Jan. 19, 1995; 60 FR 67405, Dec. 29, 1995]

§1710.253 Engineering and cost studies—addition of generation capacity.

(a) The construction or purchase of additional generation capacity and associated transmission facilities by a power supply or distribution borrower, including the replacement of existing capacity, shall be supported by comprehensive project-specific engineering and cost studies as specified by RUS. The studies shall cover a period from the beginning of the project to at least 10 years after the start of commercial operation of the facilities.

(b) The studies must include comprehensive economic present-value analyses of the costs and revenues of the available self-generation, load management, energy conservation, and purchased-power options, including assessments of service reliability and financing requirements and risks. Requirements for analyzing purchased-power options are set forth in §1710.254.

(c) Generally, studies of self-generation, load management, and energy conservation options shall include, as appropriate, analyses of:

(1) Capital and operating costs;

(2) Financing requirements and risks;

(3) System reliability;

(4) Alternative unit sizes;

(5) Alternative types of generation;

(6) Fuel alternatives;

(7) System stability;

(8) Load flows; and

(9) System dispatching.

(d) At the request of a borrower, RUS, in its sole discretion, may waive specific requirements of this section if such requirements imposed a substantial burden on the borrower and if such waiver will not significantly affect the accomplishment of the objectives of this subpart.

§1710.254 Alternative sources of power.

(a) General. (1) RUS will make loans to finance the construction of generation facilities by distribution or power supply borrowers and transmission facilities by power supply borrowers only under the following conditions if said borrowers do not already own and operate such types of facilities:

(i) Where no adequate and dependable source of power is available to meet the consumers' needs; or

(ii) Where the rates offered by other power sources would result in a higher cost of power to the consumers than the cost from facilities financed by RUS, and the amount of the power cost savings that would result from the RUS-financed facilities bears a significant relationship to the amount of the proposed loan.

(2) If a borrower already owns and operates the types of facilities included in a loan request, then a loan for the purposes set forth in paragraph (a)(1) of this section, as well as for the construction of transmission facilities by a distribution borrower, will be considered and evaluated by RUS in terms of whether the proposed facilities constitute the most effective and economical means of meeting the power requirements of the consumers.

(b) Loan requests for addition of generation capacity, including replacement of existing capacity, will be accepted by RUS only when the applicant has satisfactorily completed the investigations of possible alternative sources of power as set forth in this section. The investigations must be coordinated in advance with RUS. The capacity in question may be owned solely by the borrower or owned on an undivided ownership basis with other utilities.

(c) The applicant is required to search out and attempt to utilize capacity available from RUS borrowers and other organizations before developing plans for additional generation capacity. The applicant shall:

(1) Solicit power and energy purchase proposals from all reasonable potential sources of power, such as other electric cooperatives, investor-owned utilities, municipal utility organizations, and Federal and state power authorities.

(2) Except as herein exempted, solicit proposals from independent power producers, including co-generators, to determine the terms and conditions under which these producers can supply the additional power and energy needs of the applicant, without RUS financial assistance. Such solicitations shall be placed in at least three national newspapers or trade publications, and they shall meet all planning, coordination or other requirements imposed by state authorities, as well as RUS's environmental requirements. The following projects are exempted from this requirement to solicit proposals:

(i) Additions to or replacements of generation capacity of less than 10 megawatts.

(ii) Modifications of existing generation units if any resulting increase in generation capacity does not exceed 10 percent of the capacity of the existing unit.

(d) The applicant will evaluate all alternative proposals on an economic, present-value basis, giving consideration to cost-effectiveness, reliability of service, the short- and long-term financial viability of the supplier, and the financial risk to the borrower and its creditors. The applicant will keep RUS fully informed on these evaluations and provide supporting information and analysis as requested by RUS.

(e) After evaluation of all proposals and having informed RUS of the results, the applicant will be expected to negotiate final proposals with the entities submitting the best acceptable offers, if any, keeping RUS fully informed. All contracts entered into shall either be approved in advance by the Administrator or contain language to the effect that the contract is not valid until approved in writing by the Administrator. The Administrator will approve such contracts in a timely manner provided that the borrower has met all applicable requirements, including RUS's environmental requirements, and provided adequate evidence that the alternative selected is the most economical and effective alternative.

(f) RUS may make independent inquiries with potential power suppliers as to the availability of power to meet borrowers' needs. Information developed by RUS will be shared with borrowers at their request.

(g) Further details of RUS requirements for financing of generation and bulk transmission facilities are set forth in 7 CFR part 1712.

(h) At the request of a borrower, RUS, in its sole discretion, may waive specific requirements of paragraphs (b) through (e) of this section if such waiver is required to prevent unreasonable delays in obtaining generation capacity that could result in system reliability problems.

(Approved by the Office of Management and Budget under control number 0572–0032)

§§ 1710.255—1710.299 [Reserved]

Subpart G—Long-Range Financial Forecasts

§ 1710.300 General.

(a) RUS encourages borrowers to maintain a current long-range financial forecast. The forecast should be used by the board of directors and the manager to guide the system towards its financial goals.

(b) A borrower must prepare, for RUS review and approval, a long-range financial forecast, approved by its board of directors, in support of its loan application. The forecast must demonstrate that the borrower's system is economically viable and that the proposed loan is financially feasible. Loan feasibility will be assessed based on the criteria set forth in § 1710.112.

(c) The financial forecast and related projections submitted in support of a loan application shall include:

(1) The projected results of future actions planned by the borrower's board of directors;

(2) The financial goals established for margins, TIER, DSC, equity, and levels of general funds to be invested in plant;

(3) A pro forma balance sheet, statement of operations, and general funds summary projected for each year during the forecast period;

(4) A full explanation of the assumptions, supporting data, and analysis used in the forecast, including the methodology used to project loads, rates, revenue, power costs, operating expenses, plant additions, and other factors having a material effect on the balance sheet and on financial ratios such as equity, TIER, and DSC;

(5) Current and projected cash flows;

(6) Projections of future borrowings and the associated interest and principal expenses required to meet the projected investment requirements of the system;

(7) Current and projected kW and kWh energy sales;

(8) Current and projected unit prices of significant variables such as retail and wholesale power prices, average labor costs, and interest;

(9) Current and projected system operating costs, including, but not limited to, wholesale power costs, depreciation expenses, labor costs, and debt service costs;

(10) Current and projected revenues from sales of electric power and energy;

(11) Current and projected non-operating income and expense;

(12) A discussion of the historical experience of the borrower, and in the case of a power supply borrower its member systems as appropriate, with respect to the borrower's market competitiveness as it relates to the rates charged for electricity, competition from other fuels, and other factors. Additional data and analysis may be required by RUS on a case by case basis to assess the probable future competitiveness of those borrowers that have a history of serious competitive problems; and

(13) An analysis of the effects of major factors, such as projected increases in rates charged for electricity, on the ability of the borrower, and in the case of a power supply borrower its member systems, to compete with neighboring utilities and other energy sources.

(d) The following plans, studies and assumptions shall be used in developing the financial forecast:

(1) The RUS-approved CWP;

(2) RUS-approved power requirements data;

(3) The current rate schedules or new rates already approved by the board of directors;

(4) Future plant additions and operating expenses projected at anticipated future cost levels rather than in constant dollars, with the annual rate of inflation for major items specified; and

(5) A reasonable range of assumptions for each of the major variables to test the sensitivity of the results to changes in assumptions, if the financial forecast is used in support of a loan or loan guarantee that exceeds the smaller of 10 percent of the borrower's total utility plant or the following dollar amount: $25 million for power supply borrowers, or $3 million for distribution borrowers.

(e) The financial forecast shall use the accrual method, as approved by RUS, for analyzing costs and revenues, and, as applicable, compare the economic results of the various alternatives on a present value basis.

(f) RUS will obtain and review commercially available credit reports on applicants for a loan or loan guarantee to verify income, assets, and credit history, and to determine whether there are any outstanding delinquent Federal or other debts. Such reports will also be reviewed for parties that are or propose to be joint owners of a project with a borrower.

§1710.301 Financial forecasts—distribution borrowers.

(a) Financial forecasts prepared by distribution borrowers shall cover at least a ten-year period, unless a shorter period is authorized by other RUS regulations.

(b) In addition to the requirements set forth in §1710.300 of this part, financial forecasts prepared by distribution borrowers in support of a loan application shall:

(1) Include expenditures for any maintenance determined to be needed in the current system's operation and

maintenance review and evaluation in order to comply with mortgage covenants and prudent utility practice;

(2) Fully explain the basis for the power cost projections used. Generally, the power supplier's most recent forecasted rates shall be used; and

(3) Use RUS Form 325 or computer-generated equivalent reports.

§ 1710.302 Financial forecasts—power supply borrowers.

(a) The requirements of this section apply only to financial forecasts submitted by power supply borrowers in support of a loan from RUS. The financial forecast prepared by power supply borrowers shall demonstrate the effects that the addition of generation, transmission and any distribution facilities will have on the power supply borrower's sales, costs, and revenues, and on the cost of power to the member distribution systems.

(b) The financial forecast shall cover a period beginning with the present and extending at least 10 years beyond the projected in-service date of proposed generation and transmission facilities.

(c) Financial forecasts prepared in support of loan applications to finance additional generation capacity shall include a power cost study as set forth in § 1710.303.

(d) In addition to the requirements set forth in § 1710.300, financial forecasts prepared by power supply borrowers shall:

(1) Identify all plans for generation and transmission capital additions and system operating expenses on a year-by-year basis, beginning with the present and running for a minimum of 10 years after initial commercial operation of the facilities. RUS may request projections for a longer period of time if deemed necessary;

(2) Integrate projections of operation and maintenance expenses associated with existing plant with those of new proposed facilities to determine total costs of system operation as well as the costs of new generation and generation-related facilities;

(3) Provide an in-depth analysis of the regional markets for power if loan feasibility depends to any degree on a borrower's ability to sell surplus power while its system loads grow to meet the planned capacity of a proposed plant;

(4) If not previously submitted, furnish RUS with all material information on operating agreements, ownership agreements, fuel contracts and any other special agreements that affect annual cost projections, as may be required by RUS on a case by case basis; and

(5) Include sensitivity analysis as required by § 1710.300(d)(5). Examples of sensitivity analysis that might be used are:

(i) Effects of a 100 to 200 basis point increase in the financing interest rate;

(ii) Effects of a 50 percent reduction in the rate of projected RE Act beneficiary load growth;

(iii) Effects of a 10 to 20 percent increase in the projections for fuel costs;

(iv) Effects of a 20 percent or more increase in construction costs; and

(v) Effects of a 20 percent or more increase in maintenance, retrofit and decommissioning costs of nuclear power plants.

(e) The projections shall be coordinated in advance with RUS so that agreement can be reached on major aspects of the economic studies. These include, but are not limited to, projections of future kW and kWh requirements, RE Act beneficiary loads, electricity prices, revenues from system and off-system power sales, the cost of prospective plant additions, interest and depreciation rates, fuel costs, cost escalation factors, the discount rate, and other factors.

(f) The projections, analysis, and supporting information must be included in a report that will provide RUS with the information needed to:

(1) Understand and compare various power supply plans;

(2) Determine that the facilities to be financed will perform satisfactorily; and

(3) Determine that the overall system is economically viable and the loan is financially feasible and secure.

§ 1710.303 Power cost studies—power supply borrowers.

(a) All applications for financing of additional generation capacity and the associated bulk transmission facilities

shall be supported by a power cost study to demonstrate that the proposed generation and associated transmission facilities are the most economical and effective means of meeting the borrower's power requirements. This study usually is a separate study but it may be integrated with the financial forecast required by §1710.302.

(b) A power cost study shall include the following basic elements:

(1) A study of all reasonably available self-generation, purchased-power, load management, and energy conservation alternatives as set forth in §§1710.253 and 1710.254;

(2) A present-value analysis of the costs of the alternatives and their effects on total power costs, covering a period of at least 10 years beyond the projected in-service date of the facilities;

(3) A description of proposed new power-purchase contracts or revisions to existing contracts, and an analysis of the effects on power costs;

(4) Use of sensitivity analyses to determine the vulnerability of the alternatives to a reasonable range of assumptions about fuel costs, failure to achieve projected load growth, changes in operating and financing costs, and other major factors, if the financial forecast is used in support of a loan or loan guarantee that exceeds the smaller of $25 million or 10 percent of the borrower's total utility plant. Individual sensitivity analyses need not be duplicated if they have been included in other materials submitted to RUS; and

(5) Assessment of the financial risks of the various alternatives, especially as between capital-intensive and non-capital-intensive alternatives, under the range of assumptions set forth in paragraph (b)(4) of this section.

(c) Power cost studies must use current, RUS-approved power requirements data, and all major assumptions are subject to RUS approval. Alternative assumptions about projected power requirements may be used, however, in conjunction with the sensitivity analyses required by paragraph (b)(4) of this section.

(Approved by the Office of Management and Budget under control number 0572–0032)

§§1710.304—1710.349 [Reserved]

Subpart H—Demand Side Management and Renewable Energy Systems

SOURCE: 59 FR 496, Jan. 4, 1994, unless otherwise noted.

§1710.350 Purpose.

This subpart sets forth RUS policies and procedures with regard to loans and loan guarantees to RUS borrowers for the purpose of implementing their demand side management (DSM) plans, energy conservation programs, and on-grid and off-grid renewable energy systems. The Administrator reserves the right to determine if loans for purposes under this subpart will be made to a borrower in default under its mortgage and loan contract. As is the case with all other RUS loans, loans for purposes under this subpart will not be made to individuals.

§1710.351 General policy; renewable energy systems.

(a) Off-grid renewable energy systems will be considered the same as DSM activities and will qualify for either insured loans or loan guarantees pursuant to §1710.102.

(b) On-grid renewable energy systems will be treated as a generation resource and will be eligible only for loan guarantees pursuant to §1710.102. Existing RUS policy with respect to generation resources shall generally apply.

(c) RUS loans for renewable energy systems will be made only for systems utilizing technologies that are proven and commercially available.

§1710.352 General policy; energy resource conservation programs.

This subpart does not replace the energy resource conservation program financed by deferments of loan principal.

§1710.353 General policy; demand side management.

(a) RUS will make loans for the purpose of assisting electric borrowers to implement RUS approved demand side management plans. For the purposes of this regulation energy conservation

programs are included as a DSM activity.

(b) RUS will treat demand-side and supply-side resources on an equal basis. All requirements applicable to loans for traditional electric facilities will apply to loans for DSM. In addition the requirements set forth in this subpart will apply.

(c) DSM will be considered a distribution loan purpose, eligible for either insured loans or loan guarantees pursuant to § 1710.102.

(d) RUS will conduct its own evaluation, as specified in this subpart, of a borrower's DSM activities before making a determination on the disposition of a borrower's loan application.

(e) RUS loans for DSM activities will be made only for systems utilizing technologies that are proven and commercially available.

(f) In general, RUS will require pilot project testing of DSM activities new to the borrower.

(g) If the borrower's IRP, DSM plan, project construction and/or financing, and/or rate recovery is subject to the approval of state authorities, the borrower must obtain such approvals before RUS will approve a loan for any purpose for which an RUS approved DSM plan or IRP is required under this subpart.

§ 1710.354 Eligible DSM activities.

DSM activities that are projected to result in more efficient use of electric system resources and which are consistent with an RUS approved Integrated Resource Plan (IRP) and DSM plan may be eligible for financing. Examples of such DSM activities, which are not mutually exclusive, are as follows:

(a) General information and education;

(b) Purchase and installation of borrower owned or consumer owned equipment or materials, including:

(1) Heating, ventilation, air conditioning;

(2) Building envelope;

(3) Appliances;

(4) Load control;

(5) Lighting and lighting control;

(6) Thermal storage; and

(7) Efficient motors and drives;

(c) Rebates for DSM equipment and facilities;

(d) Fuel switching for dual fuel applications where one of the energy sources is electricity; and

(e) Pilot DSM projects.

§ 1710.355 DSM loan applications.

(a) Any loan application which includes funds for DSM must include all loan support documents required for a loan for electric facilities, and must demonstrate that requirements for need, loan feasibility and loan security are satisfied. In addition, the application must be supported by an RUS approved IRP, except as provided in § 1710.356(a)(1), and an RUS approved DSM plan.

(b) DSM loans will be made to provide financing for DSM activities planned to be implemented within a two year period.

§ 1710.356 Integrated resource plans.

(a)(1) An RUS approved IRP is required for all loans that include funds for DSM activities, unless the cumulative total of all previous DSM loans and the loan under consideration for that applicant is less than 1 percent of the applicant's total utility plant.

(2) An RUS approved IRP is required for all loans that include funds for on-grid renewable energy systems.

(3) An RUS approved IRP is required for all loans that include funds for off-grid renewable energy systems unless the Administrator determines that an IRP is not needed to determine that the loan is both feasible and secure pursuant to §§ 1710.112 and 1710.113, respectively.

(b)(1) When an IRP is required, a distribution borrower that is a member of a power supply borrower must use the IRP prepared by the power supply borrower for its overall system. This IRP must have been coordinated with all of the member systems and it must have been approved by the board of directors of the power supply borrower. Because of the relationship between the power supply borrower and its members under which the loans incurred by the power supply borrower are primarily to construct, improve or acquire facilities that benefit all members directly or indirectly, the security of loans to all

parties is interlinked. Consequently, DSM activities and renewable energy activities must be coordinated among all parties to insure that the activities of one member do not jeopardize the financial integrity or loan security of any other member or that of the power supply borrower.

(2) A distribution system that is not a member of an RUS financed power supply borrower shall prepare its own IRP. An IRP developed by a distribution borrower that is not a member of a power supply borrower need only address its own system, but shall include an analysis of the effects of its DSM activities on its wholesale power costs.

(c) The IRP shall identify supply side and demand side options and analyze their benefits and costs in order to provide adequate and reliable electric service to consumers at the lowest cost for the system as a whole.

(d) The IRP shall include necessary features for system operation, such as diversity, reliability, dispatchability, and other factors of risk; and it shall take into account the ability to verify energy and cost savings achieved through DSM, energy conservation, and renewable energy systems, and the projected durability of such savings measured over time.

(e) The following elements also included in a DSM plan, pursuant to §§1710.357 and 1710.358, shall be included except where RUS determines that they are not necessary:

(1) Load shape objectives;

(2) Wholesale power pricing policy and costs, and their relationship to the proposed DSM activities;

(3) Ownership and costs of DSM related hardware;

(4) Incentive and marketing costs;

(5) Communication and control costs; and

(6) Monitoring methods and costs.

(f) The IRP shall analyze the DSM effects set forth in §1710.359.

§1710.357 DSM plans.

(a) A DSM plan approved by the borrower's board of directors is required in support of a loan that includes funds for DSM activities or for off-grid renewable energy systems. The DSM plan shall address the borrower's existing and proposed activities for the same period covered by the Long-Range Financial Forecast submitted in support of the loan application.

(b)(1) A DSM plan prepared by a member of a power supply borrower must be consistent with the IRP prepared by the power supply borrower.

(2) A DSM plan prepared by a distribution borrower that is not a member of an RUS financed power supply borrower must be consistent with the borrower's own IRP.

(c) The level of detail required in the DSM plan is dependent on several factors, for example:

(1) Size and term of loan;

(2) Financial impact of loan on the borrower;

(3) Probability of realization of the estimated impacts;

(4) Magnitude of the estimated effects; and

(5) Potential effects, if any, on other distribution members of a power supply borrower.

(d) RUS will consider effects of proposed and existing DSM plans on government loan security, rates, revenue requirements, competitiveness, other distribution borrowers, power supply borrowers or other industry recognized tests as applicable.

§1710.358 Requirements for a DSM plan.

A DSM plan shall include:

(a) A list of the DSM activities to be financed by the loan including details on implementation such as beginning and completion dates and estimated draw downs of loan funds;

(b) An analysis of the borrower's existing and proposed DSM activities, including sources of financing and projections of the effects of those activities as set forth in §1710.359;

(c) System specific load research and DSM pilot projects as required by §1710.353(f);

(d) A benefit/cost and net present value cash flow analysis of each DSM activity included in the plan. Benefits and costs must be expressed in the same units where possible. Short term and long term impacts must be addressed. Who benefits and who pays must be clearly identified. Objectives of a DSM plan shall be stated in terms

of load profile adjustments by customer rate class and/or market segment. The benefit/cost analysis shall include the following steps:

(1) Identification of objectives, alternatives, and effects;

(2) Simulation of impacts on the system and its consumers, and the probable costs and benefits, including sensitivity/probability and scenario analysis; and

(3) Selection of DSM activities;

(e) An outline of monitoring and reporting procedures to evaluate the performance of the implemented DSM plan;

(f) A narrative discussing the following:

(1) Scope of the DSM plan;

(2) Resources used to develop the DSM plan;

(3) Internal and external data collection and analysis;

(4) Analysis method used to screen and evaluate the projected programs;

(5) Analysis of existing and projected plans; and

(6) Coordination activities with power supplier.

§ 1710.359 DSM effects.

The IRP and the DSM plan shall consider and discuss the expected effects of the borrower's DSM activities. The expected effects to be considered and discussed includes, but are not limited to, the following:

(a) Effects on the utility (supply side effects):

(1) Operations;

(2) Maintenance;

(3) Environmental compliance;

(4) Capacity planning, including deferment of capacity and reliability of capacity;

(5) DSM equipment including purchase, operation and maintenance considerations;

(6) Transmission and distribution effects;

(7) Administrative costs, including administrative and general costs, program costs, DSM planning costs, integration of supply and DSM planning, marketing costs, incentive costs, infrastructure support, monitoring and evaluation costs, bidding costs; and

(8) Revenues and rates;

(b) Effects on consumers (demand side effects):

(1) Equipment purchases;

(2) Operation costs;

(3) Maintenance costs;

(4) Supply voltage quality;

(5) Availability of service and reliability (outages);

(6) Change in benefits received from appliances and housing;

(7) Convenience (availability of equipment, appliances and services);

(8) Change in comfort and air quality levels of buildings; and

(9) Rates, billing level and elasticity;

(c) Effects on competitiveness;

(d) Effects on other member distribution systems of the power supply borrower; and

(e) Effects on power supply borrower.

§ 1710.360 Submittal of alternate documentation.

(a) The borrower may have performed analysis and prepared comparable documentation for other purposes, such as for a state regulatory commission. This information may be acceptable to RUS as an IRP or a DSM plan if the borrower demonstrates that the alternative information meets the goals and objectives of this subpart.

(b) The borrower shall advise RUS of all material information provided to other lenders or other governmental authorities relating to their DSM plans. This information shall be provided to RUS as requested.

§ 1710.361 Type and term of loans.

(a) The final maturity of loans for purposes under this subpart shall be determined by RUS based on the expected life of needed capital improvements, expected cost recovery periods, the expected life of program benefits, the certainty of these benefits, and matching costs and benefits.

(b) RUS will normally consider final maturities for DSM loans of up to 5 years. Longer loan terms, not to exceed 10 years, for loans for these purposes will be considered if the borrower can satisfactorily demonstrate to the Administrator an acceptable basis for doing so and can demonstrate that the loan will be feasible and secure pursuant to §§ 1710.112 and 1710.113, respectively, for the longer period. As used in

this paragraph, renewable energy resource equipment and facilities are not considered a DSM purpose. Maturities for such loans will be limited to the expected useful life of the equipment and facilities.

§1710.362 Loan approval.

The amount and scope of loans approved by RUS under this subpart are subject to the discretion of RUS. Applications will be evaluated on the merits of the proposals as outlined in the plans specified in this subpart. RUS approval of a loan for purposes under this subpart and/or RUS approval of IRPs and DSM plans does not relieve a borrower of its responsibilities under this subpart or constitute a representation or warranty by RUS to the borrower or any person that its IRP or DSM plan will work as described therein.

§1710.363 Advance and documentation of use of loan funds.

(a) Loan funds for on-grid renewable energy systems will be advanced using the same procedure as loans for other electric system facilities.

(b) Loan funds for DSM activities.

(1) Funds for these purposes shall be advanced and used only for the specific projects and purposes detailed in the loan application and supporting documents. Generally funds shall be drawn down on a reimbursement basis. The borrower shall certify completion of work according to the DSM plan.

(2) The borrower shall maintain accounting and plant records sufficient to document the cost and location of DSM activities and to support loan fund advances and disbursements.

(3) All cost associated with DSM projects related to construction, operations or maintenance, shall be accumulated using the borrower's work order procedure. An individual work order or work orders shall be used to record and control the costs of each DSM project. Daily time and material reports referenced to the DSM activity shall be kept to record labor and materials used as the activity(ies) is completed.

(4) All other disbursements for DSM activities must be properly supported by invoices, contracts, or other forms of evidence required by RUS regulations. All such supporting material shall be available at the borrower's premises for review by the RUS Field Accountant, borrower's certified public accountant and other authorized parties as applicable. Costs of DSM activities related to operations and maintenance should be charged to expense in the month incurred. Departures from this prescribed accounting must be approved by RUS subject to the provisions of 7 CFR 1767.13.

(c) Requirements on advance of funds for all insured electric loans are in 7 CFR part 1721, subpart B.

§1710.364 Loan limits.

Cumulative loans DSM activities at the time of loan approval for, including energy conservation programs and off-grid renewable energy systems, shall not exceed the lesser of:

(a) Twenty percent of the borrower's equity at the time of the loan or any time during amortization of the loan; or

(b) An amount approved for such purposes in a final non-appealable order by the applicable regulatory body for inclusion in the borrower's rate base.

Subpart I—Application Requirements and Procedures for Insured and Guaranteed Loans

SOURCE: 60 FR 3731, Jan. 19, 1995, unless otherwise noted.

§1710.400 Initial contact.

(a) Loan applicants that do not have outstanding loans from RUS should write to the Rural Utilities Service Administration, United States Department of Agriculture, Washington, DC 20250–1500. A field or headquarters staff representative may be assigned by RUS to visit the applicant and discuss its financial needs and eligibility. Borrowers that have outstanding loans should contact their assigned RUS general field representative (GFR) or, in the case of a power supply borrower, the Director, Power Supply Division. Borrowers may consult with RUS field representatives and headquarters staff, as necessary.

(b) Before submitting an application for an insured loan the borrower shall

ascertain from RUS the amount of supplemental financing required, as set forth in § 1710.110. If the borrower is applying for either a municipal rate loan subject to the interest rate cap or a hardship rate loan, the application must provide a preliminary breakdown of residential consumers either by county or by census tract. Final data must be included with the application. See § 1710.401(a)(8).

§ 1710.401 Loan application documents.

(a) *All borrowers.* All applications for electric loans shall include the documents listed in this paragraph. The first page of the application shall be a list of the documents included in the application. The borrower may use RUS Form 726, Checklist for Electric Loan Application, or a computer generated equivalent as this list.

(1) Transmittal letter. A letter signed by the borrower's manager indicating the actual corporate name and taxpayer identification number of the borrower and addressing the following items:

(i) The need for flood hazard insurance;

(ii) Breakdown of requested loan funds by state;

(iii) A listing of the counties served by the borrower;

(iv) A listing of threatened actions by third parties that could adversely affect the borrower's financial condition, including annexations or other actions affecting service territory, loads, or rates; and

(v) A listing of pending regulatory proceedings pertaining to the borrower.

(2) Board resolution. This document is the formal request by the borrower's board of directors for a loan from RUS. The board resolution shall include:

(i) The requested loan amount, loan term, final maturity, and method of amortization (§ 1710.110(b));

(ii) The sources and amounts of any supplemental or other financing;

(iii) Authorization for RUS to release appropriate information to supplemental or other lender(s), and authorization for these lenders to release appropriate information to RUS; and

(iv) For an insured loan, a statement of whether the application is for a municipal rate loan, with or without the interest rate cap, or a hardship loan. If the application is for a municipal rate loan, the board resolution must indicate whether the borrower intends to elect the prepayment option. See 7 CFR 1714.4(c).

(3) RUS Form 740c, Cost Estimates and Loan Budget for Electric Borrowers. This form together with its attachments lists the construction, equipment, facilities and other cost estimates from the construction work plan or engineering and cost studies, and the sources of financing for each component. The date on page 1 of the form is the beginning date of the loan period and shall be the same as the date on the Financial and Statistical Report submitted with the application (paragraph (a)(5) of this section). Form 740c also includes the following information, exhibits, and attachments:

(i) *Description of funds and materials.* This description details the availability of materials and equipment, any unadvanced funds from prior loans, and any general funds the borrower designates, to determine the amount of such materials and funds to be applied against the capital requirements estimated for the loan period.

(ii) *Useful life of facilities financed by the loan.* Form 740c must include, as a note, either a statement certifying that at least 90 percent of the loan funds are for facilities that have a useful life of 33 years or longer, or a schedule showing the costs and useful life of those facilities with a useful life of less than 33 years. This statement or schedule will be used to determine the final maturity of the loan. See § 1710.115.

(iii) *Reimbursement schedule.* This schedule lists the date, amount, and identification number of each inventory of work orders and special equipment summary that form the basis for the borrower's request for reimbursement of general funds on the RUS Form 740c. See § 1710.109. If the borrower is not requesting reimbursement, this schedule need not be submitted.

(iv) *Location of consumers.* If the application is for a municipal rate loan subject to the interest rate cap, or for a loan at the hardship rate, and the average number of consumers per mile of the total electric system exceeds 17,

Form 740c must include, as a note, a breakdown of funds included in the proposed loan to furnish or improve service to consumers located in an urban area. See 7 CFR 1714.7(c) and 1714.8(d). This breakdown must indicate the method used by the borrower for allocating loan funds between urban and non urban consumers.

(4) RUS Form 740g, Application for Headquarters Facilities. This form lists the individual cost estimates from the construction work plan or other engineering study that support the need for RUS financing for any warehouse and service type facilities included, and funding requested for such facilities shown on RUS Form 740c. If no loan funds are requested for headquarters facilities, Form 740g need not be submitted.

(5) Financial and statistical report. Distribution borrowers shall submit these data on RUS Form 7; power supply borrowers shall use RUS Form 12. The form shall contain the most recent data available, which shall not be more than 60 days old when received by RUS.

(6) Pending litigation statement. A statement from the borrower's counsel listing any pending litigation, including levels of related insurance coverage and the potential effect on the borrower. This statement and the statements from counsel required by paragraphs (a)(7) and (15) of this section may be combined into a single document.

(7) Mortgage information. A new mortgage will be required if this is a borrower's first application for a loan under the RE Act. A restated mortgage, or a mortgage supplement will be required if there has been a material change to the real property owned by the borrower since the most recent RUS loan, loan guarantee, or lien accommodation, if the requested loan would cause the borrower to exceed its previously authorized debt limit, or if RUS otherwise determines it necessary. If there has been no material change to the real property owned by the borrower since the most recent RUS loan or loan guarantee, the borrower must submit an opinion of its counsel to that effect. If a new or restated mortgage or a mortgage supplement is required, the borrower must provide the following:

(i) *Property schedule.* For a new or restated mortgage or for a mortgage supplement, the following information shall be submitted in a form satisfactory to RUS:

(A) A listing of the counties where the borrower's existing electric facilities and new facilities are or will be located;

(B) A listing and description of all real property owned by the borrower; and

(C) An opinion of the borrower's counsel certifying that the property schedule is complete and adequate for inclusion in a security instrument to be executed by the borrower to secure an RUS loan.

(ii) *Maximum debt limit.* For a new mortgage, or if the proposed loan would result in the borrower's existing mortgage debt limit being exceeded, a resolution of the borrower's board of directors, and any other authorizations or certifications required by State law, certifying that a new debt limit has been legally established that is adequate to accommodate existing indebtedness and the proposed new financing, including any concurrent loans.

(8) Rate disparity and consumer income data. If the borrower is applying under the rate disparity and consumer income tests for either a municipal rate loan subject to the interest rate cap or a hardship rate loan, the application must provide a breakdown of residential consumers either by county or by census tract. In addition, if the borrower serves in 2 or more states, the application must include a breakdown of all ultimate consumers by state. This breakdown may be a copy of Form EIA 861 submitted by the Borrower to the Department of Energy or in a similar form. See 7 CFR 1714.7(b) and 1714.8(a). To expedite the processing of loan applications, RUS strongly encourages distribution borrowers to provide this information to the GFR prior to submitting the application.

(9) Standard Form 100—Equal Employment Opportunity Employer Report EEO—1. This form, required by the Department of Labor, sets forth employment data for borrowers with 100 or more employees. A copy of this

form, as submitted to the Department of Labor, is to be included in the application for an insured loan if the borrower has more than 100 employees. See § 1710.122.

(10) Form AD–1047, Certification Regarding Debarment, Suspension, and Other Responsibility Matters—Primary Covered Transactions. This statement certifies that the borrower will comply with certain regulations on debarment and suspension required by Executive Order 12549, Debarment and Suspension (3 CFR, 1986 Comp., p. 189). See 7 CFR part 3017 and § 1710.123.

(11) Uniform Relocation Act assurance statement. This assurance, which need not be resubmitted if previously submitted, provides that the borrower shall comply with 49 CFR part 24, which implements the Uniform Relocation Assistance and Real Property Acquisition Policy Act of 1970, as amended by the Uniform Relocation Act Amendments of 1987 and 1991. See § 1710.124.

(12) Lobbying. The following information on lobbying is required pursuant to 7 CFR part 3018 and § 1710.125. Borrowers applying for both insured and guaranteed financing should consult RUS before submitting this information.

(i) *Certification regarding lobbying.* This statement certifies that the borrower shall comply with certain requirements with respect to restrictions on lobbying activities.

(ii) *Standard Form LLL—Disclosure of Lobbying Activities.* This disclosure form is required from those borrowers engaged in lobbying activities.

(13) Federal debt delinquency requirements. See 1710.126. The following documents are required:

(i) *Report on Federal debt delinquency.* This report indicates whether or not a borrower is delinquent on any Federal debt.

(ii) *Certification Regarding Federal Government Collection Options.* This statement certifies that a borrower has been informed of the collection options the Federal Government may use to collect delinquent debt. The Federal Government is authorized by law to take any or all of the following actions in the event that a borrower's loan payments become delinquent or the borrower defaults on its loans:

(A) Report the borrower's delinquent account to a credit bureau;

(B) Assess additional interest and penalty charges for the period of time that payment is not made;

(C) Assess charges to cover additional administrative costs incurred by the Government to service the borrower's account;

(D) Offset amounts owed directly or indirectly to the borrower under other Federal programs;

(E) Refer the borrower's debt to the Internal Revenue Service for offset against any amount owed to the borrower as an income tax refund;

(F) Refer the borrower's account to a private collection agency to collect the amount due; and

(G) Refer the borrower's account to the Department of Justice for collection.

(14) Articles of incorporation and bylaws. The following are required if either document has been amended since the last loan application was submitted to RUS, or if this is a borrower's first application for a loan under the RE Act:

(i) The borrower's articles of incorporation currently in effect, as filed with the appropriate state office, setting forth the borrower's corporate purpose; and

(ii) The bylaws currently in effect, as adopted by the borrower's board of directors, setting forth the manner by which the borrower's organization will be governed and regulated.

(15) State regulatory approvals. In states in which regulatory authorities have jurisdiction over the borrower's rates, the borrower must provide satisfactory evidence, pursuant to §§ 1710.105 and 1710.151(f), based on the information available, such as an opinion of counsel or of another qualified source, that the state regulatory authority will not exclude from the borrower's rate base any of the facilities included in the loan request, or otherwise prevent the borrower from charging rates sufficient to repay with interest the debt incurred for the facilities.

(16) Seismic safety certifications. This certification shall be included, if required under 7 CFR part 1792.

(17) Rates. (i) A distribution borrower shall explain any recent or planned changes in retail rates, the status of any pending rate cases before a state regulatory authority, or other pertinent rate information.

(ii) A power supply borrower shall submit a schedule of its wholesale rates currently in effect. Any changes in this schedule are subject to RUS approval.

(18) Additional supporting data. Additional supporting data may be required by RUS depending on the individual application or conditions. Examples of such additional supporting data include information about acquisitions, headquarters facilities, generation or transmission facilities, large power loads or special loads.

(b) *Distribution borrowers.* In addition to the items in paragraph (a) of this section, applications for loans submitted by distribution borrowers shall include the borrower's area coverage and line extension policies. If there have been any amendments to area coverage or line extension policies since the last loan application submitted to RUS, or if this is a borrower's first application for a loan under the RE Act, the borrower shall submit the board of directors' approved policies on area coverage and line extensions. See §§ 1710.103 and 1710.151(a).

(c) *Primary support documents.* In addition to the loan application, consisting of the documents required by paragraphs (a) and (b) of this section, all borrowers must also provide RUS with the following primary support documents pursuant to § 1710.152:

(1) Along with the loan application, the borrower shall submit to RUS a Long-Range Financial Forecast (LRFF), that meets the requirements of subpart G of this part. The forecast shall include any sensitivity analysis or analysis of alternative scenarios required by subpart G of this part, and shall be accompanied by a certified board resolution adopting, and indicating the board of directors' approval of, the LRFF, and directing management to take whatever steps may be necessary, including the filing for rate increases, to achieve the TIER goals set forth in the LRFF.

(2) Prior to RUS's acceptance of the loan application, the borrower shall submit to RUS and receive approval of:

(i) Power Requirements Study (PRS) that meets the requirements of subpart E of this part, and is accompanied by a certified board resolution adopting, and indicating the board of directors' approval of, the PRS.

(ii) Construction Work Plan (CWP) and/or related engineering and cost studies that meets the requirements of subpart F of this part, and is accompanied by a certified board resolution adopting, and indicating the board of directors' approval of, the CWP and/or engineering and cost studies.

(iii) Borrower's Environmental Report (BER), or other environmental information as required by 7 CFR part 1794.

(iv) Demand Side Management Plan and/or Integrated Resource Plan, if required by subpart H of this part.

(d) *Submission of documents.* (1) Generally, all information required by paragraphs (a), (b), and (c)(1) of this section is submitted to RUS in a single application package. The information required by paragraph (c)(2) of this section is generally submitted to, and approved by RUS before the application is submitted.

(2) To facilitate loan review, RUS urges borrowers to ensure that their applications contain all of the information required by this section before submitting the application to RUS. Borrowers may consult with RUS field representatives and headquarters staff as necessary for assistance in preparing loan applications.

(3) RUS may, in its discretion, return an application to the borrower if the application is not materially complete to the satisfaction of RUS within 10 months of receipt of any of the items listed in paragraph (a) or (b) of this section. RUS will generally advise the borrower in writing at least 2 months prior to returning the application as to the elements of the application that are not complete.

(4) If an application is returned, an application for the same loan purposes will be accepted by RUS if satisfactory evidence is provided that all of the information required by this section will

be submitted to RUS within a reasonable time. An application for loan purposes included in an application previously returned to the borrower will be treated as an entirely new application.

(e) *Complete applications.* An application is complete when all information required by RUS to approve a loan is materially complete in form and substance satisfactory to RUS.

(f) *Change in borrower circumstances.* A borrower shall, after submitting a loan application, promptly notify RUS of any changes in its circumstances that materially affect the information contained in the loan application or in the primary support documents.

(g) *Interest rate category.* For pending loans, RUS will promptly notify the borrower if its eligibility for an interest rate category changes pursuant to new information from the Department of Energy or the Bureau of the Census. See 7 CFR part 1714.

(Approved by the Office of Management and Budget under control numbers 0572–0017, 0572–0032 and 0572–1013.)

§§ 1710.402—1710.403 [Reserved]

§ 1710.404 Additional requirements.

Additional requirements for insured electric loans are set forth in 7 CFR part 1714.

§ 1710.405 Supplemental financing documents.

(a) The borrower is responsible for ensuring that the loan documents required for supplemental financing pursuant to §1710.110 are executed in a timely fashion. These documents are subject to RUS approval.

(b) Security. Any security offered by the borrower to a supplemental lender is subject to RUS approval.

§ 1710.406 Loan approval.

(a) A loan is approved when the Administrator signs the administrative findings.

(b) If the loan is not approved, RUS will notify the borrower of the reason.

§ 1710.407 Loan documents.

Following approval of a loan, RUS will forward the loan documents to the borrower for execution, delivery, recording, and filing, as directed by RUS.

PART 1714—PRE-LOAN POLICIES AND PROCEDURES FOR INSURED ELECTRIC LOANS

Subpart A—General

Sec.
1714.1 [Reserved]
1714.2 Definitions.
1714.3 Applicability of provisions.
1714.4 Interest rates.
1714.5 Determination of interest rates on municipal rate loans.
1714.6 Interest rate term.
1714.7 Interest rate cap.
1714.8 Hardship rate loans.
1714.9 Prepayment of insured loans.
1714.10—1714.49 [Reserved]

Subpart B—Terms of Insured Loans

1714.50—1714.54 [Reserved]
1714.55 Advance of funds from insured loans.
1714.56 Fund advance period.
1714.57 Sequence of advances.
1714.58 Amortization of principal.
1714.59 Rescission of loans.

AUTHORITY: 7 U.S.C. 901–950(b); Pub. L. 99–591, 100 Stat. 3341; Pub. L. 103–354, 108 Stat. 3178 (7 U.S.C. 6941 *et seq.*).

SOURCE: 58 FR 66260, Dec. 20, 1993, unless otherwise noted.

Subpart A—General

§ 1714.1 [Reserved]

§ 1714.2 Definitions.

The definitions set forth in 7 CFR 1710.2 are applicable to this part, unless otherwise stated. References to specific RUS forms and other RUS documents, and to specific sections of such forms and documents, shall include the corresponding forms, documents, sections and lines in any subsequent revisions of these forms and documents.

§ 1714.3 Applicability of provisions.

(a) *Insured electric loans approved on or after November 1, 1993.* On November 1, 1993, the Rural Electrification Loan Restructuring Act, Pub. L. 103–129, 107 Stat. 1356, (RELRA) amended the Rural Electrification Act of 1936, 7 U.S.C. 901

et seq., (RE Act) to establish a new interest rate structure for insured electric loans. Insured electric loans approved on or after this date, are either municipal rate loans or hardship rate loans. Borrowers meeting the criteria set forth in §1714.8 are eligible for 5 percent hardship rate loans. The interest rate on loans to other borrowers is the municipal interest rate, and borrowers meeting the criteria set forth in §1714.7 are eligible for the interest rate cap on their municipal rate loans. Interest rates for the initial interest rate term and rollover terms (§1714.6) will be determined pursuant to §1714.4. Provisions for prepayment are set forth in §1714.9. The provisions of this subpart apply to loans approved on or after November 1, 1993, unless otherwise stated.

(b) *Insured electric loans approved prior to November 1, 1993.* These loans have a single interest rate applicable to the entire loan. The rate is generally 5 percent, but, in some cases, may be as low as 2 percent. These loans have a single interest rate term and may be prepaid at face value at any time. Provisions for discounted prepayment of these loans are set forth in 7 CFR part 1786.

§1714.4 Interest rates.

(a) *Municipal rate loans.* Each advance of funds on a municipal rate loan shall bear interest at a single rate for each interest rate term. All interest rates applicable to municipal rate loans will be increased by one eighth of one percent (0.125 percent), if the borrower elects to include in the loan agreement a prepayment option (call provision), allowing the borrower to prepay all or a portion of an advance on a date other than a rollover maturity date. However, no interest rate for any advances of a loan to a borrower who qualifies for the interest rate cap may exceed 7 percent.

(b) *Hardship rate loans.* All advances of funds on hardship rate loans shall bear interest at a rate of 5 percent.

(c) *Application procedure.* The borrower's board resolution submitted with the loan application must indicate whether the application is for a municipal rate loan, with or without the interest rate cap, or a hardship rate loan. If the application is for a municipal rate loan, the board resolution must also indicate whether the borrower intends to elect the prepayment option.

§1714.5 Determination of interest rates on municipal rate loans.

(a) RUS will publish a schedule of interest rates for municipal rate loans in the FEDERAL REGISTER at the beginning of each calendar quarter. The schedule will show the year of maturity and the applicable interest rates in effect for all funds advanced on municipal rate loans during the calendar quarter and all interest rate terms beginning in the quarter. All interest rates will be adjusted to the nearest one eighth of one percent (0.125 percent).

(b) The rate for interest rate terms of 20 years or longer will be the average of the 20 year rates published in the Bond Buyer in the 4 weeks specified in paragraph (d) of this section for the ''11-Bond GO Index'' of Aa rated general obligation municipal bonds, or the successor to this index.

(c) The rate for terms of less than 20 years will be the average of the rates published in the Bond Buyer in the 4 weeks specified in paragraph (d) of this section in the table of ''Municipal Market Data—General Obligation Yields'' for Aa rated bonds, or the successor to this table, for obligations maturing in the same year as the interest rate term selected by the borrower.

(d) The interest rates on municipal rate loans shall not exceed the interest rate determined under section 307(a)(3)(A) of the Consolidated Farm and Rural Development Act (7 U.S.C. 1927(a)(3)(A)) for Water and Waste Disposal loans. The method used to determine this rate is set forth in the regulations of the Farmers Home Administration (FmHA) at 7 CFR 1942.17(f) (1) and (4). Pursuant to the FmHA rule, the interest rates are set using as guidance the average of the Bond Buyer Index for the four weeks prior to the first Friday of the last month before the beginning of the quarter. Information about the Bond Buyer is available by writing Bond Buyer, One State Street Plaza, New York, NY 10004–1549, or by calling 1–800–982–0633.

§ 1714.6 Interest rate term.

(a) *Municipal rate loans.* Selection of interest rate terms shall be made by the borrower for each advance of funds. The minimum interest rate term shall be one year. RUS will send the borrower written confirmation of each rollover maturity date and the applicable interest rate.

(1) The initial interest rate term will begin on the date of the advance. All rollover interest rate terms will begin on the first day of a month, and except for the last interest rate term to final maturity, shall end on the last day of a month. All terms except for the initial interest rate term on an advance, and the last term to final maturity shall be in yearly increments.

(2) The following limits apply to the number of advances of funds that may be made to the borrower on any municipal rate loan:

(i) If the loan period is 2 years or less, not more than 6 advances;

(ii) If the loan period is more than 2 years, not more than 8 advances.

(3) For the initial interest rate term of an advance, a letter from an authorized official of the borrower indicating the selection of the term shall accompany the request for the advance.

(4) At the end of any interest rate term, the borrower shall pay all accrued interest and principal balance then due, and either prepay the remaining principal of the advance at face value, or roll over the remaining principal for a new term, provided that no interest rate term may end later than the date of the final maturity.

(i) If the borrower elects to prepay all or part of the remaining principal of the advance at face value, it must notify the Director of the appropriate Regional Division or the Power Supply Division in writing not later than 20 days before the rollover maturity date.

(ii) If the borrower wishes to elect a new interest rate term that is different from the term previously selected, it must notify RUS in writing of the new term not later than 20 days before the end of the current term. The election of the new term shall be addressed to the Director, Financial Operations Division, Rural Utilities Service, Washington, DC 20250–1500.

(iii) If the borrower fails to notify RUS within the timeframes set out in this paragraph of its intention to prepay or elect a different interest rate term, RUS will automatically roll over the remaining principal for the shorter of, and at the interest rate applicable to:

(A) A period equal in length to the term that is expiring; or

(B) The remaining period to final maturity.

(b) *Hardship rate loans.* Loans made at the 5 percent hardship rate are made for a single term that cannot exceed the final maturity as set forth in 7 CFR 1710.115. The hardship interest rate applies to the entire amount of the loan.

[58 FR 66260, Dec. 20, 1993, as amended at 60 FR 3734, Jan. 19, 1995]

§ 1714.7 Interest rate cap.

Except as provided in paragraph (c) of this section, the municipal interest rate may not exceed 7 percent on a loan advance to a borrower primarily engaged in providing retail electric service if the borrower meets, at the time of loan approval, either the consumer density test set forth in paragraph (a) of this section, or both the rate disparity test for the interest rate cap and the consumer income test set forth in paragraph (b) of this section.

(a) *Low consumer density test.* The borrower meets this test if the average number of consumers per mile of line of its total electric system, based on the most recent data available at the time of loan approval is less than 5.50.

(b)(1) *Rate disparity test for the interest rate cap.* The borrower meets this test if its average revenue per kWh sold is more than the average revenue per kWh sold by all electric utilities in the state in which the borrower provides service. To determine whether a borrower meets this test, RUS will compare the borrower's average total revenue with statewide data in the table of Average Revenue per Kilowatthour for Electric Utilities by Sector, Census Division and State, in the Electric Power Annual issued by the Energy Information Administration of the Department of Energy (DOE), or the successor to this table. The test will be based on the most recent calendar year for which full year DOE data are available at the

time of loan approval and borrower data for the same year.

(2) *Consumer income test.* The borrower meets this test if either the average per capita income of the residents receiving electric service from the borrower is less than the average per capita income of residents of the state in which the borrower provides service or the median household income of the households receiving electric service from the borrower is less than the median household income of the households in the state.

(i) To qualify under the consumer income test, the borrower must include in its loan application information about the location of its residential consumers. The borrower must provide to RUS, based on the most recent data available at the time of loan application, either the number of consumers in each county it serves or the number of consumers in each census tract it serves. Using the most recently published decennial census data on income from the Bureau of the Census, RUS will compare, on a weighted average basis, the average per capita and median household income of the counties or census tracts served by the borrower with state figures.

(ii) In cases where conditions have substantially changed so that the decennial census data no longer accurately describes the economic conditions of the borrower's consumers, the borrower may provide RUS with more current income data from a reliable source such as a State agency. The Administrator has the sole discretion to determine whether such data submitted by the borrower is sufficient to determine whether the borrower qualifies under the consumer income test.

(3) *Borrowers serving 2 or more states.* If a borrower serves consumers in 2 or more states, the rate disparity test and the consumer income test will be determined on a weighted average based on the percentage of the borrower's total consumers that are served in each state.

(c) *High density test.* If the average number of consumers per mile of the borrower's total electric system exceeds 17, the interest rate cap will not apply to funds used for the purpose of furnishing or improving electric service to consumers located in an area that is an urban area at the time of loan approval, notwithstanding that the area must have been deemed a rural area for the purpose of qualifying for a loan under this part. (See the definition of ''rural area'' in 7 CFR 1710.2.) If the average number of consumers per mile of line of the borrower's total electric system exceeds 17, the borrower must include, as a note on RUS Form 740c, Cost Estimates and Loan Budget for Electric Borrowers, submitted as part of the loan application for a loan subject to the interest rate cap, a breakdown of funds included in the proposed loan to furnish or improve service to consumers located in such urban areas. For such borrowers only funds for those facilities serving consumers located outside an urban area are eligible for the interest rate cap.

§1714.8 Hardship rate loans.

Except as provided in paragraph (d) of this section, the Administrator shall make an insured electric loan for eligible purposes at the 5 percent hardship rate to a borrower primarily engaged in providing retail electric service if the borrower meets, at the time of loan approval, both the rate disparity test for hardship and the consumer income test described in paragraph (a) of this section; or the extremely high rates test set forth in paragraph (b) of this section. A loan at the 5 percent hardship rate may also be made to any borrower pursuant to paragraph (c) of this section who, in the sole discretion of the Administrator, has experienced a severe hardship. The Administrator may not require a loan from a supplemental source in connection with a hardship rate loan.

(a)(1) *Rate disparity test for hardship.* The borrower meets this test if its average revenue per kWh sold is not less than 120 percent of the average revenue per kWh sold by all electric utilities in the state in which the borrower provides service, and its average residential revenue per kWh is not less than 120 percent of the average residential revenue per kWh sold by all electric utilities in the state in which the borrower provides service. To determine whether a borrower meets this test,

RUS will compare the borrower's average total revenue and average residential revenue with statewide data in the table of Average Revenue per Kilowatthour for Electric Utilities by Sector, Census Division and State, in the Electric Power Annual issued by the Energy Information Administration of the Department of Energy (DOE), or the successor to this table. The test will be based on the most recent calendar year for which full year DOE data are available at the time of loan approval and borrower data for the same year.

(2) *Consumer income test.* The borrower meets this test if either the average per capita income of the residents receiving electric service from the borrower is less than the average per capita income of the residents of the state in which the borrower provides service or the median household income of the residents receiving electric service from the borrower is less than the median household income of the households in the state. RUS will determine whether the borrower qualifies under this test according to the procedure set forth in § 1714.7(b)(2).

(3) *Borrowers serving 2 or more states.* If a borrower serves consumers in 2 or more states, the rate disparity test and the consumer income tests will be determined on a weighted average based on the percentage of the borrower's total consumers that are served in each state.

(b) *Extremely high rates test.* Except as provided in this paragraph, the Administrator shall make an insured electric loan at the 5 percent hardship rate to any borrower whose residential revenue exceeds 15.0 cents per kWh sold. Residential revenue shall be calculated for the most recent full calendar year for which data are available and shall include sales to both seasonal and nonseasonal consumers. If, at the time of loan approval, the area to be served is an urbanized area (notwithstanding that the area must be deemed a rural area to qualify for a loan under this part (See the definition of ''rural area'' in 7 CFR 1710.2)), then the borrower must satisfy the provisions of paragraphs (a) and (d) of this section to qualify to the 5 percent hardship interest rate. If at the time of loan approval, such area is outside an urbanized area, the loan shall not be subject to the conditions and limitations set forth in paragraphs (a) and (d) of this section.

(c) *Administrator's discretion.* The Administrator may make a hardship rate loan if, in the sole discretion of the Administrator, the borrower has experienced a severe hardship. The Administrator shall consider, among other matters, whether factors beyond the control or substantial influence of the borrower have had severe adverse effect on the borrower's ability to provide service consistent with the purposes of the RE Act, and which prudent management could not reasonably anticipate and either prevent or insure against. Among the factors that may be considered are system damage due to unusual weather or other natural disasters or Acts of God, loss of substantial loads, extreme rate disparity compared to a contiguous utility, and other factors that cause severe financial hardship. The Administrator will also consider whether a hardship rate loan will provide significant relief to the borrower in dealing with the severe hardship.

(d) *High density test.* Except as provided in paragraph (b) of this section, if the average number of consumers per mile of the borrower's total electric system exceeds 17, the 5 percent hardship rate will not apply to funds used for the purpose of furnishing or improving electric service to consumers located in an area that is an urban area at the time of loan approval, notwithstanding that the area must have been deemed a rural area for the purpose of qualifying for a loan under this part. (See the definition of ''rural area'' in 7 CFR 1710.2.) If the average number of consumers per mile of line of the borrower's total electric system exceeds 17, the borrower must include, as a note on RUS Form 740c, Cost Estimates and Loan Budget for Electric Borrowers, submitted as part of the loan application for a loan at the 5 percent hardship rate, a breakdown of funds included in the proposed loan to furnish or improve service to consumers located in urban areas. For such borrowers only funds for those facilities serving consumers located outside

an urban area are eligible for the 5 percent hardship rate.

(Approved by the Office of Management and Budget under control number 0572–1013.)

§ 1714.9 Prepayment of insured loans.

This section sets out provisions for prepayment of insured electric loans at face value. Provisions for discounted prepayment of RUS loans are set out in 7 CFR part 1786.

(a) *Municipal rate loans.* Loan documents for municipal rate loans shall provide for the following:

(1) *Prepayment on a rollover maturity date.* All, or a portion of, the outstanding balance on any advance from a municipal rate loan may be prepaid on any rollover maturity date pursuant to § 1714.6(a)(4).

(2) *Prepayment on a date other than a rollover maturity date.* A borrower may elect at the time of loan approval to include a prepayment option (call provision) that will allow the borrower to prepay all, or a portion of, the outstanding balance on any advance on a date other than a rollover maturity date. Interest rates on advances from loans with a prepayment provision will be increased as set forth in § 1714.4(a).

(b) *Hardship rate loans.* Loan documents for hardship loans shall provide that the loan may be prepaid at face value at any time without penalty.

§§ 1714.10—1714.49 [Reserved]

Subpart B—Terms of Insured Loans

SOURCE: 60 FR 3734, Jan. 19, 1995, unless otherwise noted.

§§ 1714.50—1714.54 [Reserved]

§ 1714.55 Advance of funds from insured loans.

The borrower shall request advances of funds as needed. Advances are subject to RUS approval and must be requested in writing on RUS Form 595 or an RUS approved equivalent. Funds will not be advanced until the Administrator has received satisfactory evidence that the borrower has met all applicable conditions precedent to the advance of funds, including evidence that the supplemental financing required under 7 CFR part 1710 and any concurrent loan guaranteed by RUS are available to the borrower under terms and conditions satisfactory to RUS.

§ 1714.56 Fund advance period.

(a) For loans approved on or after February 21, 1995, the fund advance period begins on the date of the loan note and is one year longer than the loan period, but not less than 4 years. For example, the fund advance period for a loan with a 2-year loan period terminates automatically 4 years after the date of the loan note; a loan with a 4-year loan period terminates automatically 5 years after the date of the loan note. The Administrator may extend the fund advance period on any loan if the borrower meets the requirements of paragraph (c) of this section. As defined in 7 CFR 1710.2, the loan period begins on the date shown on page 1 of RUS Form 740c submitted with the loan application.

(b) For loans approved on or after June 1, 1984, and before February 21, 1995, the fund advance period begins on the date of the loan contract, or the most recent amendment thereto, and terminates automatically 4 years from the date of the loan contract, or the most recent amendment thereto, except as provided in paragraph (c) of this section.

(c) The Administrator may agree to an extension of the fund advance period for loans approved on or after June 1, 1984, if the borrower demonstrates to the satisfaction of the Administrator that the loan funds continue to be needed for approved loan purposes (i.e., facilities included in an RUS approved construction work plan). Policies for extension of the fund advance period following certain mergers, consolidations, and transfers of systems substantially in their entirety are set forth in 7 CFR 1717.156.

(1) To apply for an extension, the borrower must send to RUS, at least 120 days before the automatic termination date, the following:

(i) A certified copy of a board resolution requesting an extension of the Government's obligation to advance loan funds;

(ii) Evidence that the unadvanced loan funds continue to be needed for approved loan purposes; and

(iii) Notice of the estimated date for completion of construction.

(2) In the case of financial hardship, as determined by the Administrator, RUS may agree to an extension of the fund advance period even though the borrower has failed to meet the 120-day requirement of paragraph (c)(1) of this section.

(3) If the Administrator approves a request for an extension, RUS will notify the borrower in writing of the extension and the terms and conditions thereof. An extension will be effective only if it is obtained in writing prior to the automatic termination date.

(d) Advances of funds from loans approved before June 1, 1984, are generally made during the first 6 years of the note.

(e) RUS will rescind the balance of any loan funds not advanced to a borrower as of the final date approved for advancing funds.

[60 FR 3734, Jan. 19, 1995, as amended at 61 FR 66871, Dec. 19, 1996]

§ 1714.57 Sequence of advances.

(a) Except as set forth in paragraph (b) of this section, concurrent loan funds will be advanced in the following order:

(1) 50 percent of the RUS insured loan funds;

(2) 100 percent of the supplemental loan funds;

(3) The remaining amount of the RUS insured loan funds.

(b) At the borrower's request and with RUS approval, all or part of the supplemental loan funds may be advanced before funds in paragraph (a)(1) of this section.

§ 1714.58 Amortization of principal.

(a) For insured loans approved on or after February 21, 1995:

(1) Amortization of funds advanced during the first 2 years after the date of the note shall begin no later than 2 years from the date of the note. Except as set forth in paragraph (a)(2) of this section, amortization of funds advanced 2 years or more after the date of the note shall begin with the scheduled loan payment billed in the month following the month of the advance.

(2) For advances made 2 years or more after the date of the note, the Administrator may authorize deferral of amortization of principal for a period of up to 2 years from the date of the advance if the Administrator determines that failure to authorize such deferral would adversely affect either the Government's financial interest or the achievement of the purposes of the RE Act.

(b) For insured loans approved before February 21, 1995, amortization of principal shall begin 2 years after the date of the note for advances made during the first and second years of the loan, and 4 years after the date of the note for advances made during the third and fourth years.

§ 1714.59 Rescission of loans.

(a) A borrower may request rescission of a loan with respect to any funds unadvanced by submitting a certified copy of a resolution by the borrower's board of directors.

(b) RUS may rescind loans pursuant to § 1714.56.

(c) Borrowers who prepay RUS loans at a discounted present value pursuant to 7 CFR part 1786, subpart F, are required to rescind the unadvanced balance of all outstanding electric notes pursuant to 7 CFR 1786.158(j).

PART 1717—POST-LOAN POLICIES AND PROCEDURES COMMON TO INSURED AND GUARANTEED ELECTRIC LOANS

Subparts A–C [Reserved]

Subpart D—Mergers and Consolidations of Electric Borrowers

Sec.

1717.150 General.
1717.151 Definitions.
1717.152 Required documentation for all mergers.
1717.153 Transitional assistance.
1717.154 Transitional assistance in connection with new loans.
1717.155 Transitional assistance affecting new and preexisting loans.
1717.156 Transitional assistance affecting preexisting loans.
1717.157 Requests for transitional assistance.

1717.158 Mergers with borrowers who prepaid RUS loans.
1717.159 Applications for RUS approvals of mergers.
1717.160 Application contents.
1717.161 Application process.

Subparts E–F [Reserved]

Subpart G—Federal Pre-emption in Rate Making in Connection With Power Supply Borrowers

1717.300 Purpose.
1717.301 Policy.
1717.302 Definitions and rules of construction.
1717.303 Requirements of RUS Documents.
1717.304 State regulatory authority rate jurisdiction.
1717.305 Pre-emption.
1717.306 RUS required rates.
1717.307 Distribution members' rates.
1717.308 RUS approval of nonconforming rates.
1717.309 Additional statutory pre-emption.
1717.310—1717.349 [Reserved]

Subpart H—Federal Pre-emption in Rate Making in Connection With RUS Electric Borrowers in Bankruptcy

1717.350 Purpose.
1717.351 Policy.
1717.352 Definitions and rules of construction.
1717.353 Requirements of RUS documents.
1717.354 Pre-emption.
1717.355 RUS required rates.
1717.356 Additional statutory pre-emption.

Subparts I–L [Reserved]

Subpart M—Operational Controls

1717.600 General.
1717.601 Applicability.
1717.602 Definitions.
1717.603 RUS approval of extensions and additions.
1717.604 Long-range engineering plans and construction work plans.
1717.605 Design standards, plans and specifications, construction standards, and RUS accepted materials.
1717.606 Standard forms of construction contracts, and engineering and architectural services contracts.
1717.607 Contract bidding requirements.
1717.608 RUS approval of contracts.
1717.609 RUS approval of general manager.
1717.610 RUS approval of compensation of the board of directors.
1717.611 RUS approval of expenditures for legal, accounting, engineering, and supervisory services.
1717.612 RUS approval of borrower's bank or other depository.
1717.613 RUS approval of data processing and system control equipment.
1717.614 Notification of rate changes.
1717.615 Consolidations and mergers.
1717.616 Sale, lease, or transfer of capital assets.
1717.617 Limitations on distributions.

Subpart N—Investments, Loans, and Guarantees by Electric Borrowers

1717.650 Purpose.
1717.651 General.
1717.652 Definitions.
1717.653 Borrowers in default.
1717.654 Transactions below the 15 percent level.
1717.655 Exclusion of certain investments, loans, and guarantees.
1717.656 Exemption of certain borrowers from controls.
1717.657 Investments above the 15 percent level by certain borrowers not exempt under §1717.656(a).
1717.658 Records, reports and audits.
1717.659 Effect of this subpart on RUS loan contract and mortgage.

Subpart O [Reserved]

1717.700—1717.749 [Reserved]

Subpart P [Reserved]

1717.750—1717.799 [Reserved]

Subpart Q [Reserved]

1717.800—1717.849 [Reserved]

Subpart R—Lien Accommodations and Subordinations for 100 Percent Private Financing

1717.850 General.
1717.851 Definitions.
1717.852 Financing purposes.
1717.853 Loan terms and conditions.
1717.854 Advance approval—100 percent private financing of distribution, subtransmission and headquarters facilities, and certain other community infrastructure.
1717.855 Application contents: Advance approval—100 percent private financing of distribution, subtransmission and headquarters facilities, and certain other community infrastructure.
1717.856 Application contents: Normal review—100 percent private financing.
1717.857 Refinancing of existing secured debt—distribution and power supply borrowers.
1717.858 Lien subordination for rural development investments.
1717.859 Application process and timeframes.

1717.860 Lien accommodations and subordinations under section 306E of the RE Act.
1717.861—1717.899 [Reserved]

Subpart S—Lien Accommodations for Supplemental Financing Required by 7 CFR 1710.110

1717.900 Qualification requirements.
1717.901 Early approval.
1717.902 Other RUS requirements.
1717.903 Liability.
1717.904 Exemptions pursuant to section 306E of the RE Act.
1717.905—1717.949 [Reserved]

Subpart T [Reserved]

1717.950—1717.999 [Reserved]

Subpart U [Reserved]

1717.1000—1717.1049 [Reserved]

Subpart V [Reserved]

1717.1050—1717.1099 [Reserved]

Subpart W [Reserved]

1717.1100—1717.1149 [Reserved]

Subpart X [Reserved]

1717.1150—1717.1199 [Reserved]

Subpart Y—Settlement of Debt

1717.1200 Purpose and scope.
1717.1201 Definitions.
1717.1202 General policy.
1717.1203 Relationship between RUS and Department of Justice.
1717.1204 Policies and conditions applicable to settlements.
1717.1205 Waiver of existing conditions on borrowers.
1717.1206 Loans subsequent to settlement.
1717.1207 RUS obligations under loan guarantees.
1717.1208 Government's rights under loan documents.

AUTHORITY: 7 U.S.C. 901–950b, 1981; Pub. L. 99–591, 100 Stat. 3341–16; Pub. L. 103–354, 108 Stat. 3178 (7 U.S.C. 6941 *et seq.*).

SOURCE: 55 FR 38646, Sept. 19, 1990, unless otherwise noted.

Subparts A–C [Reserved]

Subpart D—Mergers and Consolidations of Electric Borrowers

SOURCE: 61 FR 66871, Dec. 19, 1996, unless otherwise noted.

§ 1717.150 General.

(a) This subpart establishes RUS policies and procedures for mergers of electric borrowers. These policies and procedures are intended to provide borrowers with the flexibility to negotiate and enter into mergers that offer advantages to the borrowers and to rural communities, and adequately protect the integrity and credit quality of RUS loans and loan guarantees.

(b) Consistent with prudent lending practices, the maintenance of adequate security for RUS loans and loan guarantees, and the objectives of the Rural Electrification Act of 1936, as amended, (7 U.S.C. 901 *et seq.*) (RE Act), RUS encourages electric borrowers to consider mergers when such action is likely to contribute, in the long-term, to greater operating efficiency and financial soundness. Borrowers are specifically encouraged to explore mergers that are likely to enhance the ability of the successor to provide reliable electric service at reasonable cost to RE Act beneficiaries.

(c) Pursuant to the loan documents and RUS regulations, certain mergers are subject to RUS approval. See § 1717.615.

(d) Since RUS must take action in order to advance funds and otherwise conduct business with a successor, RUS encourages borrowers to consult RUS early in the process regardless of whether RUS approval of the merger is required. RUS will provide technical assistance and guidance to borrowers to help expedite the processing of their requests and to help resolve potential problems early in the process.

§ 1717.151 Definitions.

The definitions set forth in 7 CFR 1710.2 are applicable to this subpart unless otherwise stated. In addition, for the purpose of this subpart, the following terms shall have the following meanings:

Active borrower means an electric borrower that has, on the effective date, an outstanding insured or guaranteed loan from RUS for rural electrification, and whose eligibility for future RUS financing is not restricted pursuant to 7 CFR part 1786.

Active distribution borrower means an electric distribution borrower that has,

on the effective date, an outstanding insured or guaranteed loan from RUS for rural electrification, and whose eligibility for future RUS financing is not restricted pursuant to 7 CFR part 1786.

Consolidation. See *Merger*.

Coverage ratios means collectively TIER, OTIER, DSC and ODSC, as these terms are defined in 7 CFR 1710.2.

Effective date means the date a merger is effective pursuant to applicable state law.

Former distribution borrower means any organization that

(1) Sells or intends to sell electric power and energy at retail;

(2) At one time had an outstanding loan made or guaranteed by RUS, or its predecessor the Rural Electrification Administration (REA) for rural electrification; and

(3) Either repaid such loans at face value or prepaid pursuant to 7 CFR part 1786.

Loan documents means the mortgage (or other security instrument acceptable to RUS), the loan contract, and the promissory note(s) entered into between the borrower and RUS.

Merger means: (1) A consolidation where two or more companies are extinguished and a new successor is created, acquiring the assets, liabilities, franchises and powers of those passing out of existence;

(2) A merger where one company is absorbed by another, the former ceasing to exist as a separate business entity, and the latter retaining its own identity and acquiring the assets, liabilities, franchises and powers of the former; or

(3) A transfer of mortgaged property by one company to another where the transferee acquires substantially as an entirety the assets, liabilities, franchises, and powers of the transferor.

New loan means a loan to a successor approved by RUS on or after the effective date.

Preexisting loan means a loan to a borrower approved by RUS prior to, and outstanding on the effective date.

Successor means the entity that continues as the surviving business entity as of the effective date, and acquires all the assets, liabilities, franchises, and powers of the entity or entities ceasing to exist as of the effective date.

Transitional assistance means financial relief provided to borrowers by RUS during a limited period of time following a merger.

§1717.152 Required documentation for all mergers.

In order for RUS to advance funds, send bills, and otherwise conduct business with a successor, the documents listed in this section must be submitted to RUS regardless of the need for RUS approval of the merger. Borrowers are responsible for ensuring that these documents are received by RUS in timely fashion. In cases of mergers that require RUS approval, or cases where borrowers must submit requests for transitional assistance, the documents listed in this section may be combined with the documents required by §§1717.157 and/or 1717.160 where appropriate.

(a) Prior to the effective date, borrowers must submit:

(1) A transmittal letter on corporate letterhead signed by the manager of each active borrower that is a party to the proposed merger indicating the borrower's intention to merge and tentative timeframes, including the proposed effective date;

(2) An original certified board resolution from each party to the proposed merger affirming the board's support of the merger;

(3) All documents necessary to evidence the merger pursuant to applicable law. Examples include plan of merger, articles of merger, amended articles of incorporation, bylaws, and notices and filings required by law. These documents may be copies of documents filed elsewhere, unless otherwise specified by RUS; and

(4) A letter addressed to the Administrator from the counsel of at least one of the active borrowers briefly describing the merger and indicating the relevant statutes under which the merger will be consummated.

(b) On or after the effective date, borrowers must submit:

(1) An opinion of counsel from the successor addressing, among other things, any pending litigation, proper authorization and consummation of the merger, proper filing and perfection of RUS' security interest, and all

approvals required by law. RUS will provide the form of the opinion of counsel to the successor;

(2) A letter signed by the manager of the successor advising RUS of the effective date of the merger; the corporate name, address, and phone number; the names of the officers of the successor; and the taxpayer identification number; and

(3) Evidence of proper filing and perfection of RUS' security interest, as instructed by RUS, and an executed loan contract.

§ 1717.153 Transitional assistance.

RUS recognizes that short-term financial stresses can follow even the most beneficial mergers. To help stabilize electric rates, enhance the credit quality of outstanding loans made or guaranteed by the Government, and otherwise ease the transition period before the long-term efficiencies and economies of a merger can be realized, RUS may approve one or more types of transitional assistance to a successor under the conditions set forth in this part.

§ 1717.154 Transitional assistance in connection with new loans.

Requests for transitional assistance in connection with new loans may be submitted to RUS no later than the loan application.

(a) *Loan processing priority*. (1) RUS loans are generally processed in chronological order based on the date the complete application is received in the regional or division office. At the borrower's request, RUS will offer loan processing priority for the first loan to a successor, provided that the loan is approved by RUS not later than 5 years after the effective date of the merger. For any subsequent loans approved during those 5 years, RUS may offer loan processing priority. In reviewing requests for loan processing priority on subsequent loans, RUS will consider the loan authority for the fiscal year, the borrower's projected cash flows, its electric rates and rate disparity, and the likely mitigating effects of priority loan processing. See 7 CFR 1710.108 and 1710.119.

(2) Loan processing priority is available following any merger where at least one of the merging parties is an active borrower.

(b) *Supplemental financing*. (1) RUS generally requires that an applicant for a municipal rate loan obtain a portion of its debt financing from a supplemental source without an RUS guarantee. See 7 CFR 1710.110. RUS will, at the borrower's request, waive the requirement to obtain supplemental financing for the first RUS loan approved after the effective date if that first loan is a municipal rate loan whose loan period does not exceed 2 years, and the loan is approved by RUS not later than 5 years after the effective date. For any subsequent loans approved during these 5 years, or if the borrower requests a loan period longer than 2 years, RUS may, subject to the availability of loan funds, waive or reduce the amount of supplemental financing required. In reviewing requests to reduce or waive supplemental financing on subsequent loans or on loans with a loan period longer than 2 years, RUS will consider the differences in interest rates between RUS and supplemental loans and the impacts of this difference on the borrower's projected cash flows and its electric rates and rate disparity. If significant differences would result, the waiver will be granted.

(2) Waiver of supplemental financing may be available if:

(i) All parties to the merger are active distribution borrowers, *or*

(ii) At least one of the merging parties is an active distribution borrower, all merging parties are either active distribution borrowers or former distribution borrowers, *and* the merger is effective after December 19, 1996.

(c) *Reimbursement of general funds and interim financing*. (1) Borrowers may request RUS loan funds to reimburse general funds and/or interim financing used to finance equipment and facilities included in a RUS approved construction work plan or amendment if the construction was completed immediately preceding the current loan period. This reimbursement period is generally limited to 24 months. See 7 CFR 1710.109. RUS may, in connection with the first RUS loan approved after the effective date, approve a reimbursement period of up to 48 months prior to

the current loan period if the loan is approved not later than 5 years after the effective date. In reviewing requests for this longer reimbursement period, RUS will consider the stresses that the transaction and other costs of entering into the merger places on the borrower's rates and cash flows, and the mitigating effects of more generous reimbursement.

(2) A longer reimbursement period may be available if:

(i) All parties to the merger are active distribution borrowers, *or*

(ii) At least one of the merging parties is an active distribution borrower, all merging parties are either active distribution borrowers of former distribution borrowers, *and* the merger is effective after December 19, 1996.

§1717.155 Transitional assistance affecting new and preexisting loans.

Requests for transitional assistance affecting new and preexisting loans must be received by RUS no later than 2 years after the effective date.

(a) *Section 12 deferments.* (1) Section 12 of the RE Act (7 U.S.C. 912) allows RUS to extend the time of payment of interest or principal of RUS loans. Section 12 deferments do not extend the final maturity of the loan; lower payments during the deferment period result in higher payments later. Therefore, RUS may approve a Section 12 deferment of loan payments of up to 5 years only if such deferments will help to avoid substantial increases in retail electric rates during the transition period, without placing borrowers in financial stress after the deferment period.

(2) Section 12 deferment may be available following any merger where at least one of the merging parties is an active borrower.

(b) *Coverage ratios.* Required levels for coverage ratios are set forth in 7 CFR 1710.114 and in the loan documents. RUS may approve a plan, on a case by case basis, that provides for a phase-in period for these coverage ratios of up to 5 years from the effective date. Under such a plan the successor would be permitted to project and achieve lower levels for one or more of these coverage ratios during the phase-in period.

(1) A phase-in plan for coverage ratios must provide a pro forma level for each ratio during each year of the phase-in period and be supported by a financial forecast covering a period of not less than 10 years from the effective date of the merger. The plan must demonstrate that a minimum TIER level of 1.00 will be achieved in each year, that trends will be generally favorable, that the borrower will achieve the levels required in its loan documents and RUS regulations by the end of the phase-in period, and that these levels will be maintained in subsequent years.

(2) In reviewing phase-in plans for coverage ratios, RUS will review rates, rate disparity, and likely mitigating effects of the proposed phase-in plan.

(3) The borrower is responsible for obtaining approvals of supplemental lenders.

(4) Upon RUS approval of a phase-in plan, the levels in that plan will be substituted for the levels required in the borrower's preexisting loan documents and will be incorporated in any new loan or security documents.

(5) A phase in plan for coverage ratios may be available if:

(i) All parties to the merger are active distribution borrowers, *or*

(ii) At least one of the merging parties is an active distribution borrower, all merging parties are either active distribution borrowers or former distribution borrowers, and the merger is effective after December 19, 1996.

§1717.156 Transitional assistance affecting preexisting loans.

The fund advance period for an insured loan, which is the period during which RUS may advance loan funds to a borrower, terminates automatically after a specific period of time. See 7 CFR 1714.56. If, on the effective date the original fund advance period or the fund advance period as extended pursuant to 7 CFR 1714.56(c), on any preexisting RUS loan to any of the active borrowers involved in a merger has not terminated, such fund advance period shall be automatically lengthened by 2 years. On the borrower's request RUS will prepare documents necessary for the advance of loan funds. RUS will prepare documents for the borrower's

execution that will reflect this extension and will provide the legal authority for RUS to advance funds to the successor.

§ 1717.157 Requests for transitional assistance.

(a) If the merger requires RUS approval, the borrower should, where possible, indicate that it desires transitional assistance at the time it requests approval of the merger. The formal request for transitional assistance must be received by RUS as specified in §§ 1717.155 and 171.156. Documents listed in this section may be combined with the documents required by §§ 1717.152 and/or 1717.160 where appropriate. If the request for transitional assistance is submitted at the same time as a loan application, documents listed in this section may be combined with the loan application documents where appropriate. See 7 CFR part 1710, subpart I. A request for transitional assistance must include:

(1) Transmittal letter(s) formally listing the types of transitional assistance requested. If the request is submitted before the effective date, a transmittal letter must be signed by the manager of each party to the transaction. If the request is submitted on or after the effective date, a transmittal letter must be signed by the manager of the successor. Transmittal letter(s) must be signed originals on corporate letterhead stationery;

(2) Board resolution(s). If the request is submitted before the effective date, a separate board resolution must be submitted from each entity involved in the merger. If the request is submitted on or after the effective date, a board resolution from the successor must be submitted. Each board resolution must be a certified original;

(3) A merger plan, financial forecasts, and any available studies such as net present value analyses showing the anticipated costs and benefits of the merger and likely timeframes for the merger. The merger plan must clearly identify those benefits that cannot be achieved without a merger, and those benefits that can be achieved through other means;

(4) If the transitional assistance requires RUS approval, the type and extent of the mitigation that the transitional assistance is expected to provide; and

(5) Other information that may be relevant.

(b) Borrowers are responsible for ensuring that requests for transitional assistance are complete and sound in form and substance when they are submitted to RUS. After submitting a request, borrowers shall promptly notify RUS of any changes or events that materially affect the request or any information in the request.

(c) In considering whether to approve requests for transitional assistance, RUS will evaluate the costs and benefits of the merger; the type and extent of the likely transitional stress; whether the transitional assistance requested is likely to materially mitigate such stress; and the likely impacts on electric rates and on the security of RUS loans. Review factors applicable to each type of transitional assistance are set forth in §§ 1717.154–1717.156.

§ 1717.158 Mergers with borrowers who prepaid RUS loans.

In some cases, an active distribution borrower may merge with a borrower that has prepaid RUS debt at a discount pursuant to 7 CFR part 1786, and whose eligibility for future RUS financing is thereby restricted. During the period when the restrictions on future financing are in effect, the successor will be eligible for RUS loans to finance facilities to serve consumers located in the territory that was served by the active distribution borrower immediately prior to the effective date, provided that other requirements for loan eligibility are met.

§ 1717.159 Applications for RUS approvals of mergers.

If a proposed merger requires RUS approval according to RUS regulations and/or the loan documents executed by any of the active borrowers involved, the application must be submitted to RUS not later than 90 days prior to the effective date of the proposed borrower action. A distribution borrower should consult with its assigned RUS general field representative, and a power supply borrower with the Director, Power

Supply Division for general information prior to submitting the request.

§1717.160 Application contents.

An application for RUS approval of a merger must include the documents listed in this section. Documents listed in this section may be combined with the documents required by §§1717.152 and/or 1717.157 where appropriate.

(a) *Transmittal letters* signed by the managers of all borrowers and non-borrowers who are parties to the proposed merger. These letters must include the actual corporate name, address, and taxpayer identification number of all parties to the proposed merger. The transmittal letters must be signed originals on corporate letterhead stationery.

(b) *Resolutions from the boards of directors* of all borrowers and non-borrowers who are parties to the proposed merger. This document is the formal request by each entity for RUS approval of the proposed merger. The board resolution must include a description of the proposed merger, including timeframes, and authorization for RUS to release appropriate information to supplemental or other lenders, and for these lenders to release appropriate information to RUS. Each board resolution must be a certified original.

(c) *Evidence* that the proposed merger will result in a viable entity, and that the security of outstanding RUS loans will not be adversely affected by the action. This evidence shall include financial forecasts, and any available studies such as net present value analyses covering a period of not less than 10 years from the effective date of the merger, as well as information about any threatened actions by other parties that could adversely affect the financial condition of any of the parties to the proposed merger, or of the successor. Such threatened actions may include annexations or other actions affecting service territory, loads, rates or other such matters.

(d) *Regulatory information* about pending federal or state proceedings pertaining to any of the parties that could have material effects on the successor.

(e) *Rate information*. Distribution and power supply borrowers shall submit schedules of proposed rates after the merger, including the effects of the proposed action on rates and the status of any pending rate cases before a state regulatory authority. The rates of power supply borrowers are subject to RUS approval. If rates are not projected to change after the merger, a statement to that effect will suffice.

(f) *Area coverage and line extension policies.* If any distribution systems are parties to the proposed merger, a statement of proposed area coverage and line extension policies for the successor.

§1717.161 Application process.

(a) Borrowers are responsible for ensuring that their applications for RUS approval of a merger are complete and sound in form and substance when they are submitted to RUS. After submitting an application, borrowers shall promptly notify RUS of any changes or events that materially affect the application or any information in the application.

(b) In reviewing borrower requests for approval of mergers, RUS will consider the likely effects of the action on the ability of the successor to provide reliable electric service at reasonable cost to RE Act beneficiaries and on the security of outstanding RUS loans. Among the factors RUS will consider are whether the proposed merger is likely to:

(1) Contribute to greater operating efficiency and financial soundness;

(2) Mitigate high electric rates and or rate disparity;

(3) Help borrowers to diversify their loads or otherwise hedge risks;

(4) Have beneficial effects on rural economic development in the community served by the borrower, such as diversifying the economic base or alleviating unemployment; and

(5) Provide other benefits consistent with the purposes of the RE Act.

(c) RUS will not approve a merger if, in the sole judgment of the Administrator, such action is likely to have an adverse effect on the credit quality of outstanding loans made or guaranteed by the Government. RUS will thoroughly review each request for approval of such action, including review of the feasibility and security of outstanding Government loans according

to the standards in 7 CFR 1710.112 and 1710.113, respectively, and in other RUS regulations.

(d) RUS will keep the borrowers apprised of the progress of their applications.

Subparts E–F [Reserved]

Subpart G—Federal Pre-emption in Rate Making in Connection With Power Supply Borrowers

§ 1717.300 Purpose.

This subpart contains regulations of the Rural Utilities Service (RUS) implementing provisions of Section 4 of the RE Act (7 U.S.C. 904) which authorize the Administrator to establish terms and conditions of loans and implementing provisions of the RUS wholesale power contracts and other RUS documents which provide for the establishment of rates to be charged by power supply borrowers for the sale of electric power and energy. This subpart contains the general regulations of RUS for the pre-emption, under certain circumstances, which are not exclusive, of the regulation of a power supply borrower's rates by a state regulatory authority under state law and for the exercise of exclusive jurisdiction over rates by RUS pursuant to the RUS documents.

§ 1717.301 Policy.

(a) RUS makes and guarantees loans to borrowers to bring electric service to persons in rural areas. RUS requires, as a condition to making or guaranteeing any loans to power supply borrowers, that the borrower enter into RUS wholesale power contracts with its several members and assign and pledge such contracts as security for the repayment of loans made or guaranteed by RUS and for other loans which, pursuant to the RE Act, RUS has permitted to be secured pursuant to the RUS mortgage. The RUS wholesale power contract requires, among other matters, that the rates charged for power and energy sold thereunder produce revenues sufficient to enable the power supply borrower to make payments on account of all indebtedness of the power supply borrower. The Administrator relies upon the RUS wholesale power contracts together with other RUS documents to find and certify, as required in section 4 of the RE Act (7 U.S.C. 904), that the security for the loan is reasonably adequate and the loan will be repaid within the time agreed.

(b) RUS requires power supply borrowers to take such actions as may be necessary to charge rates for the sale of electric power and energy which are sufficient to pay the principal and interest on loans made or guaranteed by RUS in a timely manner and to meet the requirements of the RUS wholesale power contract and other RUS documents.

(c) With respect to power supply borrowers which are not subject to rate regulation by a state regulatory authority, RUS requires that such borrowers establish rates and obtain RUS approval of such rates as required by the terms of the RUS wholesale power contract and other RUS documents.

(d) With respect to power supply borrowers which are subject to regulation by a state regulatory authority, RUS does not make or guarantee a loan for the construction, operation or enlargement of any generating plant or transmission facility unless the consent of the state regulatory authority having jurisdiction in the premises is first obtained.

(e) Pursuant to applicable provisions of state law state regulatory authorities regulate many aspects of a power supply borrowers business activities, including such matters as the setting of wholesale electric rates, the borrowing of money, and the mortgaging of property. A state regulatory authority's jurisdiction over the rates charged by a power supply borrower shall be pre-empted where the Administrator has determined that such jurisdiction has compromised Federal interests, including without limitation, the ability of the borrower to repay its secured loans in accordance with the terms of the RUS documents. Thereupon, RUS shall, pursuant to the RUS documents, exercise exclusive jurisdiction over the rates charged by a power supply borrower.

[55 FR 38646, Sept. 19, 1990; 55 FR 53100, Dec. 26, 1990]

§1717.302 Definitions and rules of construction.

(a) *Definitions.* For the purpose of this subpart, the following terms shall have the following meanings:

Administrator means the Administrator of RUS.

Borrower means any organization which has an outstanding loan made or guaranteed by RUS for rural electrification. Unless otherwise stated in the text, ''borrower'' shall mean power supply borrower.

Loan contract means the agreement, as amended, supplemented, or restated from time to time, between a borrower and RUS providing for loans made or guaranteed pursuant to the RE Act.

Power supply borrower means any borrower engaged in the wholesale sale of electric power and energy to distribution members either directly or though other power supply borrowers pursuant to RUS wholesale power contracts.

RE Act means Rural Electrification Act of 1936, as amended (7 U.S.C. 901 *et seq.*).

REA means the Rural Electrification Administration formerly an agency of the United States Department of Agriculture and predecessor agency to RUS with respect to administering certain electric and telephone loan programs.

RUS means the Rural Utilities Service, an agency of the United States Department of Agriculture established pursuant to Section 232 of the Federal Crop Insurance Reform and Department of Agriculture Reorganization Act of 1994 (Pub. L. 103–354, 108 Stat. 3178), successor to REA with respect to administering certain electric and telephone programs. See 7 CFR 1700.1.

RUS documents means the loan contract, mortgage and RUS wholesale power contract of a power supply borrower.

RUS mortgage means the mortgage and security agreement, as from time to time supplemented, amended and restated, made by and among the borrower, RUS, and, if a party thereto, third party lenders, or any other form of mortgage or security instrument or indenture of mortgage and deed of trust, securing the payment of outstanding loans made or guaranteed by RUS and other lenders.

RUS wholesale power contract means the contract for the wholesale sale of electric power and energy between a power supply borrower and its member as approved by RUS.

Secured loans shall mean outstanding loans secured pursuant to the RUS mortgage.

State regulatory authority means any state board or local governing body having jurisdiction under state law to regulate, or in any way, approve the electric rates charged by a power supply borrower or electric distribution member of a power supply borrower.

(b) *Rules of Construction.* Unless the context shall otherwise indicate, the terms defined in §1717.302(a) hereof include the plural as well as the singular, and the singular as well as the plural. The words ''herein,'' and ''hereunder'', and words of similar import, refer to this subpart as a whole. ''Includes'' and ''including'' are not limiting and ''or'' is not exclusive.

[55 FR 38646, Sept. 19, 1990, as amended at 59 FR 66440, Dec. 27, 1994]

§1717.303 Requirements of RUS documents.

(a) Pursuant to the terms of the RUS documents each power supply borrower shall establish and adjust rates for the sale of electric power and energy in such a manner as to assure that the borrower will be able to make required payments on secured loans.

(b) Pursuant to the terms of the RUS wholesale power contract, the Board of Directors or Board of Trustees of the power supply borrower shall review rates not less frequently than once each calendar year and revise its rates as therein set forth.[1] The RUS wholesale power contract further provides

[1] The Wholesale Power Contract, with minor modifications which are approved by RUS on a case by case basis, provides that the rate charged for electric power and energy, shall produce revenues which shall be sufficient, but only sufficient, with the revenues of the Seller from all other sources, to meet the cost of the operation and maintenance (including without limitation, replacements, insurance, taxes and administrative and general overhead expenses) of the generating plant transmission system and related facilities of the Seller, the cost of any power

Continued

that the borrower shall notify the Administrator not less than 30 nor more than 45 days prior to the effective date of any adjustment and shall set forth the basis upon which the rate is to be adjusted and established. The RUS wholesale power contract provides that no final revision in rates shall be effective unless approved in writing by the Administrator.

(c) Pursuant to the terms of the RUS mortgage, each power supply borrower must design its rates as therein set forth and must give 90 days prior notice to RUS of any proposed change in its general rate structure.

(Approved by the Office of Management and Budget under control number 0572–0089)

§ 1717.304 State regulatory authority rate jurisdiction.

(a) In the event that rate revisions required by the terms of the RUS wholesale power contract or other RUS documents may be subject to the approval of a state regulatory authority, the power supply borrower shall seek such required approval in a timely manner.

(b) RUS recognizes the need of state regulatory authorities for documents, information and records for use in connection with an application for rate approval and will consider any reasonable request by a borrower or a state regulatory authority for such documents, information and records. The failure of RUS to provide requested documents, information or records shall not limit any rights of RUS including the right with respect to pre-emption of the state regulatory authority as provided in this subpart.

(c) In the event that the state regulatory authority shall fail to act favorably upon the borrower's application for rate increases required by terms of the RUS wholesale power contract or other RUS documents, the borrower shall pursue such legal and administrative appeals as may be available to it, unless RUS shall approve otherwise in writing.

§ 1717.305 Pre-emption.

(a) *Inadequate rates.* State regulatory authority jurisdiction over a power supply borrower's rates shall be pre-empted by the RE Act if the Administrator shall have determined that the borrower's rates approved by the state regulatory authority are, after taking into account the borrower's costs and expenses, inadequate to produce revenues sufficient to permit the borrower to make required payments on its secured loans and the borrower has failed to make required payments on its secured loans.

(b) *Public notice.* The Administrator shall:

(1) Notify the borrower and the state regulatory authority in writing of the determination, indicating the jurisdiction of the state regulatory authority over the rates of the borrower has been pre-empted pursuant to this part and the borrower shall henceforth establish its rates in accordance with the term of the RUS documents.

(2) publish a notice in the FEDERAL REGISTER informing the public of the action.

[55 FR 38646, Sept. 19, 1990; 55 FR 53100, Dec. 26, 1990]

§ 1717.306 RUS required rates.

(a) Upon the publication in the FEDERAL REGISTER of the notice of pre-emption of state regulatory authority as provided in this subpart, RUS will exercise exclusive jurisdiction over the rates of the borrower pursuant to the terms of the RUS documents. The borrower shall immediately establish rates with the approval of RUS that are sufficient to satisfy the requirements of the RUS wholesale power contract and other RUS documents described in § 1717.303 of this subpart. The borrower shall establish such rates notwithstanding provisions of state law, and rules, orders or other actions of state regulatory authorities, and notwithstanding any provision of the RUS documents referring to such laws, rules, orders or actions.

---

and energy purchased for resale hereunder by the Seller, the cost of transmission service, make payments on account of principal and interest on all indebtedness of the Seller, and to provide for the establishment and maintenance of reasonable reserves. (Section 4. Rates (b), RUS Form 444, ''Wholesale Power Contract—Federated Cooperative''; Rev. 6–60.)

(b) So long as the state regulatory authority shall be pre-empted hereunder, RUS shall be considered the governmental regulatory body with jurisdiction over rates for the purposes of the RUS documents and for the purposes of section 1129(a)(6) of the Bankruptcy Code of 1978, as amended (11 U.S.C. 1129(a)(6)).

(c) If a borrower, which is subject to exclusive RUS rate jurisdiction, shall fail to establish rates in accordance with terms of the RUS wholesale power contract and other RUS documents in a timely fashion, RUS may proceed to exercise any and all rights and remedies available pursuant under the RUS documents or otherwise.

(d) The jurisdiction of the state regulatory authority over the rates of the borrower shall continue to be pre-empted hereunder until the Administrator shall in writing approve the resumption of jurisdiction by the state regulatory authority and publish in the FEDERAL REGISTER a notice to such effect. The Administrator shall approve resumption only after determining that such jurisdiction shall be exercised in a manner consistent with Federal interests.

[55 FR 38646, Sept. 19, 1990; 55 FR 53100, Dec. 26, 1990]

§1717.307 Distribution members' rates.

A state regulatory authority which has been pre-empted as provided in this subpart may continue to exercise jurisdiction, pursuant to applicable provisions of state law, over all other business affairs of the power supply borrower and over the rates of its distribution members: Provided, however, that the state regulatory authority shall treat any RUS approved rate for the power supply borrower as fair and reasonable and shall not in any manner, directly or indirectly, prevent or impede the distribution member from recovering the costs of paying the RUS approved rates to the power supply borrower.

§1717.308 RUS approval of nonconforming rates.

Borrowers may request and RUS may approve rates which do not conform with the requirements of the RUS wholesale power contract and other RUS documents if RUS determines, in its sole discretion, that such approval is in the interests of RUS. If RUS approval is granted prior to pre-emption hereunder, and if the state regulatory authority shall have approved such rates, then, so long as RUS's approval of the nonconforming rates remains in effect, the jurisdiction of the state regulatory authority over the rates of the borrower shall not be pre-empted hereunder.

§1717.309 Additional statutory pre-emption.

This subpart addresses pre-emption of state law and state regulatory authority in only those specific circumstances herein described. Nothing in this subpart waives, limits, or otherwise affects the explicit pre-emption or pre-emption, which is implicit and shall occur pursuant to the RE Act as a matter of law, of state law or action of a state regulatory authority where such state law or such action compromises Federal interests, including the ability of any borrower, including power supply borrowers, to repay loans made or guaranteed by RUS.

§§1717.310—1717.349 [Reserved]

Subpart H—Federal Pre-emption in Rate Making in Connection With RUS Electric Borrowers in Bankruptcy

SOURCE: 55 FR 38653, Sept. 19, 1990, unless otherwise noted.

§1717.350 Purpose.

This subpart contains regulations of the Rural Utilities Service (RUS) implementing provisions of section 4 of the RE Act (7 U.S.C. 904) which authorizes the Administrator to establish terms and conditions of loans, and provisions of the RUS documents which provide for the establishment of rates for electric service to be charged by RUS electric borrowers. This subpart contains the general regulations of RUS for the pre-emption of the regulation by a State Regulatory Authority under State law of an RUS borrower's

rates and for the exercise by RUS, pursuant to the RUS documents, of exclusive jurisdiction over rates of a borrower by or against whom a case under the Bankruptcy Code of 1978, as amended, has commenced.

§ 1717.351 Policy.

(a) RUS makes and guarantees loans to borrowers to bring electric service to persons in rural areas. To accomplish this objective, RUS normally requires, as a condition to making or guaranteeing any loans to an electric borrower, that the borrower execute and deliver the RUS documents in the form prescribed by RUS. The RUS mortgage secures repayment of the loans made or guaranteed by RUS and other loans which, pursuant to the RE Act, RUS has permitted to be secured pursuant to the RUS mortgage. The Administrator relies upon the RUS mortgage together with other RUS documents to find and certify, as required by section 4 of the RE Act (7 U.S.C. 904), that the security for the loan is reasonably adequate and the loan will be repaid within the time agreed.

(b) RUS requires borrowers to take such actions as may be necessary to establish rates for electric service which are sufficient to pay the principal of and interest on the loans made or guaranteed by RUS in a timely manner and to meet the requirements of the RUS documents.

(c) With respect to borrowers whose rates are not regulated by a State Regulatory Authority, RUS requires that such borrowers establish rates and to obtain RUS approval of such rates as required by the RUS documents.

(d) To protect Federal interests, including without limitation the ability of the borrower to repay RUS loans, RUS's policy is to exercise, pursuant to the RUS documents, exclusive jurisdiction over the rates for electric service charged by a borrower by or against whom a case under the Bankruptcy Code of 1978, as amended, has commenced.

§ 1717.352 Definitions and rules of construction.

(a) *Definitions.* For the purpose of this subpart, the following terms shall have the following meanings:

Administrator means the Administrator of RUS.

Bankruptcy code of 1978, as amended, means the Bankruptcy Reform Act of 1978, as amended (11 U.S.C. 101 *et seq.*).

Borrower means any organization which has an outstanding loan made or guaranteed by RUS for rural electrification.

RE Act means Rural Electrification Act of 1936, as amended (7 U.S.C. 901 *et seq.*).

REA means the Rural Electrification Administration formerly an agency of the United States Department of Agriculture and predecessor agency to RUS with respect to administering certain electric and telephone loan programs.

RUS means the Rural Utilities Service, an agency of the United States Department of Agriculture established pursuant to Section 232 of the Federal Crop Insurance Reform and Department of Agriculture Reorganization Act of 1994 (Pub. L. 103–354, 108 Stat. 3178), successor to REA with respect to administering certain electric and telephone programs. See 7 CFR 1700.1.

RUS documents means the RUS loan contract, RUS mortgage and, if the Borrower is engaged in the wholesale sale of electric power and energy to members pursuant to RUS Wholesale Power Contracts, the RUS Wholesale Power Contract.

RUS loan contract means the agreement, as amended, supplemented, or restated from time to time, between a borrower and RUS providing for loans made or guaranteed pursuant to the RE Act.

RUS mortgage means the mortgage and security agreement, as from time to time supplemented, amended and restated, made by and among the borrower, RUS, and, if a party thereto, third party lenders, or any other form of mortgage or security instrument or indenture of mortgage and deed of trust, securing the payment of outstanding loans made or guaranteed by RUS and other lenders.

RUS wholesale power contract means the contract for the wholesale sale of electric power and energy between a power supply borrower and its member as approved by RUS.

Secured loans shall mean outstanding loans secured pursuant to the RUS mortgage.

State regulatory authority means any state board or local governing body having jurisdiction under state law to regulate, or in any way, approve the electric rates charged by a borrower.

(b) *Rules of construction.* Unless the context shall otherwise indicate, the terms defined in §1717.352(a) hereof include the plural as well as the singular, and the singular as well as the plural. The words ''herein,'' and ''hereunder'', and words of similar import, refer to this subpart as a whole. ''Includes'' and ''including'' are not limiting and ''or'' is not exclusive.

[55 FR 38653, Sept. 19, 1990, as amended at 59 FR 66440, Dec. 27, 1994]

§1717.353 Requirements of RUS documents.

Each borrower shall establish and adjust rates for electric service as set forth in the RUS documents to assure that the borrower will be able to make required payments on secured loans and to otherwise meet the terms of the RUS documents.

§1717.354 Pre-emption.

State Regulatory Authority jurisdiction over an RUS borrower's rates shall be pre-empted by the RE Act and RUS shall have exclusive jurisdiction over the borrower's rates:

(a) On October 19, 1990, with respect to any borrower by or against whom a case under the Bankruptcy Code of 1978, as amended, was commenced prior to and remains outstanding on October 19, 1990; and

(b) With respect to all other borrowers, upon the filing of a petition by or against the borrower commencing a case under the Bankruptcy Code of 1978, as amended.

§1717.355 RUS required rates.

(a) Upon the pre-emption of State Regulatory Authority as provided in this subpart, RUS will exercise exclusive jurisdiction over the rates of the borrower pursuant to the terms of the RUS documents.

(b) So long as the State Regulatory Authority shall be pre-empted hereunder, RUS shall be considered the governmental regulatory body with jurisdiction over rates for all purposes, including for the purposes of the RUS documents and for the purposes of section 1129(a)(6) of the Bankruptcy Code of 1978, as amended (11 U.S.C. 1129(a)(6)).

(c) RUS shall, pursuant to the terms of the RUS documents, exercise exclusive jurisdiction over the rates of the borrower until the Administrator shall in writing approve the resumption of jurisdiction by the State Regulatory Authority. The Administrator shall approve resumption only after determining that such jurisdiction shall be exercised in a manner consistent with Federal interests.

§1717.356 Additional statutory pre-emption.

This subpart addresses pre-emption of State law and State Regulatory Authority upon the filing of a petition by or against the borrower commencing a case under the Bankruptcy Code of 1978, as amended. Nothing in this subpart waives, limits, or otherwise affects the explicit pre-emption or pre-emption, which is implicit and shall occur pursuant to the RE Act as a matter of law, of State law or action of a State Regulatory Authority where such State law or such action compromises Federal interests, including the ability of any borrower to repay loans made or guaranteed by RUS.

Subparts I–L [Reserved]

Subpart M—Operational Controls

SOURCE: 60 FR 67405, Dec. 29, 1995, unless otherwise noted.

§1717.600 General.

(a) *General.* The loan contract and mortgage between the Rural Utilities Service (RUS) and electric borrowers imposes certain restrictions and controls on the borrowers and gives RUS (and other co-mortgagees in the case of the mortgage) the right to approve or

disapprove certain actions contemplated by the borrowers. Certain of these controls and approval rights are referred to informally as ''operational controls'' because they pertain to decisions or actions with respect to the operation of the borrowers' electric systems. The approval authority granted to RUS by the loan contract or mortgage regarding each decision or action subject to controls is often stated in broad, unlimited terms. This subpart lists the main operational controls affecting borrowers and establishes for each area of control the circumstances under which RUS approval of a decision or action by a borrower is either required or not required. In some cases, only the general principles or general circumstances pertaining to RUS approval or control are presented in this subpart, while the details regarding the circumstances and requirements of RUS approval or control are set forth in other RUS regulations. Since this subpart addresses only the main operational controls, failure to address a control or approval right in this subpart in no way invalidates such controls or rights established by the loan contract, mortgage, other agreements between a borrower and RUS, and RUS regulations.

(b) *Case by case amendments.* Upon written notice to a borrower, RUS may amend or annul the approvals and exceptions to controls set forth in this subpart or other RUS regulations if the borrower is in violation of any provision of its loan documents or any other agreement with RUS, or if RUS determines that loan security and/or repayment is threatened. Such amendment or annulment will apply to decisions and actions of the borrower after said written notice has been provided by RUS.

(c) *Generic notices.* By written notice to all borrowers or a group of borrowers, RUS may grant or waive approval of decisions and actions by the borrowers that are controlled under the loan documents and RUS regulations. RUS may also by written notice withdraw or cut back its grant or waiver of approval of said decisions and actions made by previous written notice, but may not by such notice extend its authority to approve decisions and actions by borrowers beyond the authority granted by the loan documents and RUS regulations.

§ 1717.601 Applicability.

(a) The approvals and exceptions to controls conveyed by this subpart apply only to controls and approval rights normally included in RUS loan documents dated prior to January 29, 1996. They do not apply to special controls and approval requirements included in loan documents or other agreements executed between a borrower and RUS that relate to individual problems or circumstances specific to an individual borrower.

(b) The approvals and exceptions to controls granted by RUS in this subpart shall not in any way affect the rights of other co-mortgagees under the mortgage or their loan contracts.

§ 1717.602 Definitions.

Terms used in this subpart that are not defined in this section have the meanings set forth in 7 CFR part 1710. In addition, for the purposes of this subpart:

Default means an event of default as defined in the borrower's loan documents or other agreement with RUS, and furthermore includes any event that has occurred and is continuing which, with notice or lapse of time and notice, would become an event of default.

Equity means the borrower's total margins and equities computed pursuant to RUS accounting requirements but excluding any regulatory created assets.

Financed or funded by RUS means financed or funded wholly or in part by a loan made or guaranteed by RUS, including concurrent supplemental loans required by 7 CFR 1710.110, loans to reimburse funds already expended by the borrower, and loans to replace interim financing.

Interchange agreement means a contractual arrangement that can include a variety of services utilities provide each other to increase reliability and

efficiency, and to avoid duplicating expenses. Some examples are: transmission service (the use of transmission lines to move power and energy from one area to another); emergency service (an agreement by one utility to furnish another with power and energy to protect it in times of emergency, such as power plant outages); reserve sharing (contributions to a common pool of generating plant reserves so that each individual utility's reserves can be reduced); and economic exchanges (swapping power and energy from different plants to avoid running the most expensive units).

Interconnection agreement means a contract governing the terms for establishing or using one or more electrical connections between two or more electric systems permitting a flow of power and energy among the systems.

Loan documents means the mortgage (or other security instrument acceptable to RUS), the loan contract, and the promissory note entered into between the borrower and RUS.

Net utility plant means the amount constituting the total utility plant of the borrower, less depreciation, computed in accordance with RUS accounting requirements.

Pooling agreement means a contract among two or more interconnected electric systems to operate on a coordinated basis to achieve economies and/or enhance reliability in supplying their respective loads.

Power supply contract means any contract entered into by a borrower for the sale or purchase, at wholesale, of electric energy.

Regulatory created assets means the sum of any amounts properly recordable as unrecovered plant and regulatory study costs or as other regulatory assets, computed pursuant to RUS accounting requirements.

RUS accounting requirements means the system of accounts prescribed for electric borrowers by RUS regulations as such RUS accounting requirements exist at the date of applicability thereof.

RUS regulations mean regulations of general applicability published by RUS from time to time as they exist at the date of applicability thereof, and shall also include any regulations of other federal entities which RUS is required by law to implement.

Total assets means an amount constituting the total assets of the borrower as computed pursuant to RUS accounting requirements, but excluding any regulatory created assets.

Wheeling agreement means a contract providing for the use of the electric transmission facilities of one electric utility to transmit power and energy of another electric utility or other entity to a third party. Such transmission may be accomplished directly or by displacement.

§1717.603 RUS approval of extensions and additions.

(a) *Distribution borrowers.* Prior written approval by RUS is required for a distribution borrower to extend or add to its electric system if the extension or addition will be financed by RUS. For extensions and additions that will not be financed by RUS, approval is hereby given to distribution borrowers to make such extensions and additions to their electric systems, including the use of (or commitment to use) general funds of the borrower, except for the following:

(1) Construction, procurement, or leasing of generating facilities if the combined capacity of the facilities to be built, procured, or leased, including any future facilities included in the planned project, will exceed the lesser of 5 megawatts or 30 percent of the borrower's equity;

(2) Acquisition or leasing of existing electric facilities or systems in service whose purchase price, or capitalized value in the case of a lease, exceeds 10 percent of the borrower's net utility plant; and

(3) Construction, procurement, or leasing of electric facilities to serve a customer whose annual kWh purchases or maximum annual kW demand in the foreseeable future is projected to exceed 25 percent of the borrower's total kWh sales or maximum kW demand in the year immediately preceding the acquisition or start of construction.

(b) *Power supply borrowers.* Prior written approval by RUS is required for a power supply borrower to extend or add to its electric system if the extension or addition will be financed by RUS.

Requirements for RUS approval of extensions and additions that will not be financed by RUS are set forth in other RUS regulations.

(c) *Additional details.* Additional details relating to RUS approval of extensions and additions of a borrower's electric system financed by RUS are set forth in other RUS regulations, e.g., in 7 CFR parts 1710 and 1726.

§ 1717.604 Long-range engineering plans and construction work plans.

(a) All borrowers are required to maintain up-to-date long-range engineering plans and construction work plans (CWPs) in form and substance as set forth in 7 CFR part 1710, subpart F.

(b) Applications for financing from RUS must be supported by a long-range engineering plan and CWP approved by RUS.

(c) RUS approval is not required for long-range engineering plans and CWPs if the borrower does not intend to seek RUS financing for any of the facilities, equipment or other purposes included in those plans. However, if requested by RUS, a borrower must provide an informational copy of such plans to RUS.

§ 1717.605 Design standards, plans and specifications, construction standards, and RUS accepted materials.

All borrowers, regardless of the source of funding, are required to comply with applicable RUS requirements with respect to system design, construction standards, and the use of RUS accepted materials. Borrowers must comply with applicable RUS requirements with respect to plans and specifications only if the construction or procurement will be financed by RUS. These requirements are set forth in other RUS regulations, especially in 7 CFR parts 1724 and 1728.

§ 1717.606 Standard forms of construction contracts, and engineering and architectural services contracts.

All borrowers are encouraged to use the standard forms of contracts promulgated by RUS for construction, materials, equipment, engineering services, and architectural services, regardless of the source of funding for such construction and services. Borrowers are required to use these standard forms of contracts only if the construction, procurement or services are financed by RUS, and only to the extent required by RUS regulations. RUS requirements with respect to such standard forms of contract are set forth in 7 CFR part 1724 for architectural and engineering services, and in 7 CFR part 1726 for construction, materials, and equipment.

§ 1717.607 Contract bidding requirements.

Borrowers must follow RUS requirements regarding bidding for contracts for construction, materials, and equipment only if financing of the construction or procurement will be provided by RUS. These requirements are set forth in 7 CFR part 1726.

§ 1717.608 RUS approval of contracts.

(a) *Construction contracts and architectural and engineering contracts.* RUS approval of contracts for construction and procurement and for architectural and engineering services is required only when such construction, procurement or services are financed by RUS. Detailed requirements regarding RUS approval of such contracts are set forth in 7 CFR part 1724 for architectural and engineering services, and in 7 CFR part 1726 for construction and procurement.

(b) *Large retail power contracts.* RUS approval of contracts to sell electric power to retail customers is required only if the contract is for longer than 2 years and the kWh sales or kW demand for any year covered by the contract exceeds 25 percent of the borrower's total kWh sales or maximum kW demand for the year immediately preceding execution of the contract. This requirement applies regardless of the source of funding of any plant extensions, additions or improvements that may be involved in connection with the contract.

(c) *Power supply arrangements.* (1) Power supply contracts (including but not limited to economy energy sales and emergency power and energy sales), interconnection agreements, interchange agreements, wheeling agreements, pooling agreements, and any other similar power supply arrangements subject to approval by RUS are deemed approved if they have

a term of 2 years or less. Amendments to said power supply arrangements are also deemed approved provided that the amendment does not extend the term of the arrangement for more than 2 years beyond the date of the amendment.

(2) Any amendment to a schedule or exhibit contained in any power supply arrangement subject to RUS approval, which merely has the effect of either altering a list of interconnection or delivery points or changing the value of a variable term (but not the formula itself) contained in a formulary rate or charge is deemed approved.

(3) The provisions of this paragraph (c) apply regardless of whether the borrower is a seller or purchaser of the services furnished by the contracts or arrangements, and regardless of whether or not a Federal power marketing agency is a party to any of them.

(d) *System management and maintenance contracts.* RUS approval of contracts for the management and operation of a borrower's electric system or for the maintenance of the electric system is required only if such contracts cover all or substantially all of the electric system.

(e) *Other contracts.* [Reserved]

§1717.609 RUS approval of general manager.

(a) If a borrower's mortgage or loan contract grants RUS the unconditioned right to approve the employment and/or the employment contract of the general manager of the borrower's system, such approval is hereby granted provided that the borrower is in compliance with all provisions of its loan documents and any other agreements with RUS.

(b) If a borrower is in default with respect to any provision of its loan documents or any other agreement with RUS:

(1) Such borrower, if directed in writing by RUS, shall replace its general manager within 30 days after the date of such written notice; and

(2) Such borrower shall not hire a general manager without prior written approval by RUS.

§1717.610 RUS approval of compensation of the board of directors.

If a borrower's mortgage or loan contract requires the borrower to obtain approval from RUS for compensation provided to members of the borrower's board of directors, such requirement is hereby waived.

§1717.611 RUS approval of expenditures for legal, accounting, engineering, and supervisory services.

(a) If a borrower's mortgage or loan contract requires the borrower to obtain approval from RUS before incurring expenses for legal, accounting, supervisory (other than for the management and operation of the borrower's electric system, see §1717.608(d)), or other similar services, such approval is hereby granted. However, while expenditures for accounting do not require RUS approval, the selection of a certified public accountant by the borrower to prepare audited reports required by RUS remains subject to RUS approval.

(b) If a borrower's mortgage or loan contract requires the borrower to obtain approval from RUS before incurring expenses for engineering services, such approval is hereby granted if such services will not be financed by RUS. Approval requirements with respect to engineering services financed by RUS are set forth in other RUS regulations.

§1717.612 RUS approval of borrower's bank or other depository.

If a borrower's mortgage or loan contract gives RUS the authority to approve the bank or other depositories used by the borrower, such approval is hereby granted. However, without the prior written approval of RUS, a borrower shall not deposit funds from loans made or guaranteed by RUS in any bank or other depository that is not insured by the Federal Deposit Insurance Corporation or other Federal agency acceptable to RUS, or in any account not so insured.

§1717.613 RUS approval of data processing and system control equipment.

If a borrower's mortgage or loan contract requires the borrower to obtain approval from RUS before purchasing

data processing equipment or system control equipment, such approval is hereby granted if the equipment will not be financed by RUS.

§ 1717.614 Notification of rate changes.

If a distribution borrower is required by its loan documents to notify RUS in writing of proposed changes in electric rates more than 30 days prior to the effective date of such rates, the required notification period shall be 30 days. Moreover, such notification shall be required only upon the request of RUS.

§ 1717.615 Consolidations and mergers.

A distribution or power supply borrower may without the prior approval of RUS, consolidate or merge with any other corporation or convey or transfer the mortgaged property substantially as an entirety if the following conditions are met:

(a) Such consolidation, merger, conveyance or transfer shall be on such terms as shall fully preserve the lien and security of the RUS mortgage and the rights and powers of the mortgagees;

(b) The entity formed by such consolidation or with which the borrower is merged or the corporation which acquires by conveyance or transfer the mortgaged property substantially as an entirety shall execute and deliver to the mortgagees a mortgage supplemental in recordable form and containing an assumption by such successor entity of the due and punctual payment of the principal of and interest on all of the outstanding notes and the performance and observance of every covenant and condition of the mortgage;

(c) Immediately after giving effect to such transaction, no default under the mortgage shall have occurred and be continuing;

(d) The borrower shall have delivered to the mortgagees a certificate of its general manager or other officer, in form and substance satisfactory to each of the mortgagees, which shall state that such consolidation, merger, conveyance or transfer and such supplemental mortgage comply with this section and that all conditions precedent herein provided for relating to such transaction have been complied with;

(e) The borrower shall have delivered to the mortgagees an opinion of counsel in form and substance satisfactory to each of the mortgagees; and

(f) The entity formed by such consolidation or with which the borrower is merged or the corporation which acquires by conveyance or transfer the mortgaged property substantially as an entirety shall be an entity having:

(1) Equity equal to at least 27% of its total assets on a pro forma basis after giving effect to such transaction;

(2) A pro forma TIER of not less than 1.50 and a pro forma DSC of not less than 1.25 for each of the two preceding calendar years; and

(3) Net utility plant equal to or greater than 1.0 times its total long-term debt on a pro forma basis.

§ 1717.616 Sale, lease, or transfer of capital assets.

A distribution borrower may without the prior approval of RUS sell, lease, or transfer any capital asset if the following conditions are met:

(a) The borrower is not in default;

(b) In the most recent year for which data are available, the borrower achieved a TIER of at least 1.5, DSC of at least 1.25, OTIER of at least 1.1, and ODSC of at least 1.1, in each case based on the average or the best 2 out of the 3 most recent years;

(c) The sale, lease, or transfer of assets will not reduce the borrower's existing or future requirements for energy or capacity being furnished to the borrower under any wholesale power contract which has been pledged as security to the government;

(d) Fair market value is obtained for the assets;

(e) The aggregate value of assets sold, leased, or transferred in any 12-month period is less than 10 percent of the borrower's net utility plant prior to the transaction;

(f) The proceeds of such sale, lease, or transfer, less ordinary and reasonable expenses incident to such transaction, are immediately:

(1) Applied as a prepayment of all notes secured under the mortgage equally and ratably;

(2) In the case of dispositions of equipment, materials or scrap, applied to the purchase of other property useful in the borrower's utility business; or

(3) Applied to the acquisition of construction of utility plant.

§1717.617 Limitations on distributions.

If a distribution or power supply borrower is required by its loan documents to obtain prior approval from RUS before declaring or paying any dividends, paying or determining to pay any patronage refunds, or retiring any patronage capital, or making any other cash distributions, such approval is hereby given if the following conditions are met:

(a) After giving effect to the distribution, the borrower's equity will be greater than or equal to 30 percent of its total assets;

(b) The borrower is current on all payments due on all notes secured under the mortgage;

(c) The borrower is not otherwise in default under its loan documents; and

(d) After giving effect to the distribution, the borrower's current and accrued assets will be not less than its current and accrued liabilities.

Subpart N—Investments, Loans, and Guarantees by Electric Borrowers

AUTHORITY: 7 U.S.C. 901–950b; Pub.L. 103–354, 108 Stat. 3178 (7 U.S.C. 6941 *et seq.*); Title I, Subtitle D, Pub.L. 100–203, 101 Stat. 1330.

SOURCE: 60 FR 48877, Sept. 21, 1995, unless otherwise noted.

§1717.650 Purpose.

This subpart sets forth general regulations for implementing and interpreting provisions of the RUS mortgage and loan contract regarding investments, loans, and guarantees made by electric borrowers, as well as the provisions of the Rural Electrification Act of 1936, as amended, including section 312 (7 U.S.C. 901 *et seq.*) (RE Act), permitting, in certain circumstances, that electric borrowers under the RE Act may, without restriction or prior approval of the Administrator of the Rural Utilities Service (RUS), invest their own funds and make loans or guarantees.

§1717.651 General.

(a) *Policy*. RUS electric borrowers are encouraged to utilize their own funds to participate in the economic development of rural areas, provided that such activity does not in any way put government funds at risk or impair a borrower's ability to repay its indebtedness to RUS and other lenders. In considering whether to make loans, investments, or guarantees, borrowers are expected to act in accordance with prudent business practices and in conformity with the laws of the jurisdictions in which they serve. RUS assumes that borrowers will use the latitude afforded them by section 312 of the RE Act primarily to make needed investments in rural community infrastructure projects (such as water and waste systems, garbage collection services, etc.) and in job creation activities (such as providing technical, financial, and managerial assistance) and other activities to promote business development and economic diversification in rural communities. Nonetheless, RUS believes that borrowers should continue to give primary consideration to safety and liquidity in the management of their funds.

(b) *Applicability of this subpart*. This subpart applies to all distribution and power supply borrowers regardless of when their loan contract or mortgage was executed.

§1717.652 Definitions.

As used in this subpart:

Borrower means any organization that has an outstanding loan made or guaranteed by RUS for rural electrification.

Cash-construction fund-trustee account means the account described in the Uniform System of Accounts as one to which funds are deposited for financing the construction or purchase of electric facilities.

Distribution borrower means a Distribution Borrower as defined in 7 CFR 1710.2.

Electric system means all of the borrower's interests in all electric production, transmission, distribution, conservation, load management, general

plant and other related facilities, equipment or property and in any mine, well, pipeline, plant, structure or other facility for the development, production, manufacture, storage, fabrication or processing of fossil, nuclear, or other fuel or in any facility or rights with respect to the supply of water, in each case for use, in whole or in major part, in any of the borrower's generating plants, including any interest or participation of the borrower in any such facilities or any rights to the output or capacity thereof, together with all lands, easements, rights-of-way, other works, property, structures, contract rights and other tangible and intangible assets of the borrower in each case used or useful in such electric system.

Equity means the Margins and Equities of the borrower as defined in the Uniform System of Accounts, less regulatory created assets.

Guarantee means to undertake collaterally to answer for the payment of another's debt or the performance of another's duty, liability, or obligation, including, without limitation, the obligations of subsidiaries. Some examples of such guarantees include guarantees of payment or collection on a note or other debt instrument (assuring returns on investments); issuing performance bonds or completion bonds; or cosigning leases or other obligations of third parties.

Invest means to commit money in order to earn a financial return on assets, including, without limitation, all investments properly recorded on the borrower's books and records in investment accounts as those accounts are used in the Uniform System of Accounts for RUS Borrowers. Borrowers may submit any proposed transaction to RUS for an interpretation of whether the action is an investment for the purposes of this definition.

Make loans means to lend out money for temporary use on condition of repayment, usually with interest.

Mortgaged property means any asset of the borrower which is pledged in the RUS mortgage.

Natural gas distribution system means any system of community infrastructure that distributes natural gas and whose services are available by design to all or a substantial portion of the members of the community.

Operating DSC means Operating Debt Service Coverage (ODSC) of the borrower's electric system calculated as:

$$\mathrm{ODSC} = \frac{A + B + C}{D}$$

where:

All amounts are for the same year and are based on the RUS system of accounts;

A=Depreciation and Amortization Expense of the electric system;

B=Interest on Long-term Debt of the electric system, except that Interest on Long-term Debt shall be increased by ⅓ of the amount, if any, by which the rentals of Restricted Property of the electric system exceed 2 percent of Total Margins and Equities;

C=Patronage Capital & Operating Margins of the electric system (distribution borrowers) or Operating Margins of the electric system (power supply borrowers); and

D=Debt Service Billed (RUS + other) which equals all interest and principal billed or billable during the calendar year for long-term debt of the electric system plus ⅓ of the amount, if any, by which the rentals of Restricted Property of the electric system exceed 2 percent of Total Margins and Equities. Unless otherwise indicated, all terms used in defining ODSC and OTIER are as defined in RUS Bulletin 1717B–2 Instructions for the Preparation of the Financial and Statistical Report for Electric Distribution Borrowers, and RUS Bulletin 1717B–3 Instructions for the Preparation of the Operating Report for Power Supply Borrowers and for Distribution Borrowers with Generating Facilities, or the successors to these bulletins.

Operating TIER means Operating Times Interest Earned Ratio (OTIER) of the borrower's electric system calculated as:

$$\mathrm{OTIER} = \frac{A + B}{A}$$

where:

All amounts are for the same year and are based on the RUS system of accounts;

A=Interest on Long-term Debt of the electric system, except that Interest on Long-term Debt shall be increased by 1/3 of the amount, if any, by which the rentals of Restricted Property of the electric system exceed 2 percent of Total Margins and Equities; and

B=Patronage Capital & Operating Margins of

the electric system (distribution borrowers) or Operating Margins of the electric system (power supply borrowers).

Own funds means money belonging to the borrower other than funds on deposit in the cash-construction fund-trustee account.

Power supply borrower means a Power Supply Borrower as defined in 7 CFR 1710.2.

Regulatory created assets means the sum of the amounts properly recordable in Account 182.2 Unrecovered Plant and Regulatory Study Costs, and Account 182.3 Other Regulatory Assets of the Uniform System of Accounts.

RUS means the Rural Utilities Service, an agency of the U.S. Department of Agriculture established pursuant to Section 232 of the Federal Crop Insurance Reform and Department of Agriculture Reorganization Act of 1994 (Pub. L. 103–354, 108 Stat. 3178, 7 U.S.C. 6941 et seq.) and, for purposes of this subpart, includes its predecessor, the Rural Electrification Administration.

RUS loan contract means the loan contract between the borrower and RUS.

RUS mortgage means any and all instruments creating a lien on or security interest in the borrower's assets in connection with loans or guarantees under the RE Act.

Solid waste disposal system means any system of community infrastructure that provides collection and/or disposal of solid waste and whose services are available by design to all or a substantial portion of the members of the community.

Subsidiary means a company which is controlled by the borrower through ownership of voting stock, and is further defined in 7 CFR 1767.10.

Supplemental lender means a lender that has provided a supplemental source of financing that is secured by the RUS mortgage.

Telecommunication and other electronic communication system means any community infrastructure that provides telecommunication or other electronic communication services and whose services are available by design to all or a substantial portion of the members of the community.

Total assets means the total assets of the borrower as calculated according to the Uniform System of Accounts, less regulatory created assets.

Total utility plant means the sum of the borrower's Electric Plant Accounts and Construction Work in Progress—Electric Accounts, as such terms are used in the Uniform System of Accounts.

Uniform System of Accounts means the system of accounts prescribed for RUS borrowers in 7 CFR part 1767.

Water and waste disposal system means any system of community infrastructure that supplies water and/or collects and treats waste water and whose services are available by design to all or a substantial portion of the members of the community.

§1717.653 Borrowers in default.

Any borrower not in compliance with all provisions of its mortgage, loan contract, or any other agreements with RUS must, unless the borrower's mortgage, loan contract, or other agreement with RUS specifically provides otherwise with respect to such a borrower:

(a) Obtain prior written approval from the Administrator to invest its own funds or to make loans or guarantees regardless of the aggregate amount of such investments, loans, or guarantees; and

(b) If requested by the Administrator, restructure or reduce the amount of its investments, loans, and guarantees to a level determined by the Administrator, in his or her sole discretion, to be in the financial interest of the government with respect to loan security and/or repayment. If the borrower does not so restructure or reduce its portfolio within a reasonable period of time determined by the Administrator, which shall not exceed 12 months from the date the borrower was notified of the required action, then, upon written notice from RUS, the borrower shall be in default of its RUS loan contract and mortgage.

§1717.654 Transactions below the 15 percent level.

(a) A borrower in compliance with all provisions of its RUS mortgage, RUS loan contract, and any other agreements with RUS may, without prior written approval of the Administrator,

invest its own funds or make loans or guarantees not in excess of 15 percent of its total utility plant without regard to any provision contained in any RUS mortgage or RUS loan contract to the effect that the borrower must obtain prior approval from RUS, provided, however, that the borrower may not, without the prior written approval of the Administrator, make such investments, loans, and guarantees to extend, add to, or modify its electric system. Moreover, funds necessary to make timely payments of principal and interest on loans secured by the RUS mortgage remain subject to RUS controls on borrower investments, loans and guarantees.

(b) RUS will not consider requests from borrowers to exclude investments, loans, or guarantees made below the 15 percent level. (Categorical exclusions are set forth in § 1717.655.)

§ 1717.655 Exclusion of certain investments, loans, and guarantees.

(a) In calculating the amount of investments, loans and guarantees permitted under this subpart, there is excluded from the computation any investment, loan or guarantee of the type which by the terms of the borrower's RUS mortgage or RUS loan contract the borrower may make in unlimited amounts without RUS approval.

(b) Furthermore, the borrower may make unlimited investments, without prior approval of the Administrator, in:

(1) Securities or deposits issued, guaranteed or fully insured as to payment by the United States Government or any agency thereof;

(2) Capital term certificates, bank stock, or other similar securities of the supplemental lender which have been purchased as a condition of membership in the supplemental lender, or as a condition of receiving financial assistance from such lender, as well as any other investment made in, or loans made to, the National Rural Utilities Cooperative Finance Corporation, the Saint Paul Bank for Cooperatives, and CoBank, ACB;

(3) Patronage capital allocated from an electric power supply cooperative of which the borrower is a member; and

(4) Patronage capital allocated from an electric distribution cooperative to a power supply borrower.

(c) Without prior approval of the Administrator, the borrower may also:

(1) Invest or lend funds derived directly from:

(i) Grants which the borrower in not obligated to repay, regardless of the source or purpose of the grant; and

(ii) Loans received from or guaranteed by any Federal, State or local government program designed to promote rural economic development, provided that the borrower uses the loan proceeds for such purpose;

(2) Make loans guaranteed by an agency of USDA, up to the amount of principal whose repayment, with interest, is fully guaranteed; and

(3)(i) Make unlimited investments in and unlimited loans to finance the following community infrastructure that serves primarily consumers located in rural areas as defined in 7 CFR 1710.2, and guarantee debt issued for the construction or acquisition of such infrastructure, up to an aggregate amount of such guarantees not to exceed 20 percent of the borrower's equity:

(A) Water and waste disposal systems;

(B) Solid waste disposal systems;

(C) Telecommunication and other electronic communication systems; and

(D) Natural gas distribution systems.

(ii) In each of the four cases in paragraph (c)(3)(i) of this section, if the system is a component of a larger organization other than the borrower itself (e.g., if it is a component of a subsidiary of the borrower or a corporation independent of the borrower), to be eligible for the exemption the borrower must certify annually that a majority of the gross revenues of the larger organization during the most recent fiscal year came from customers of said system who were located in a rural area.

(d) Also excluded from the calculation of investments, loans and guarantees made by the borrower are:

(1) Amounts properly recordable in Account 142 Customer Accounts Receivable, and Account 143 Other Accounts Receivable;

(2) Any investment, loan, or guarantee that the borrower is required to make by an agency of USDA, for example, as a condition of obtaining financial assistance for itself or any other person or organization;

(3) Investments included in an irrevocable trust for the purpose of funding post-retirement benefits of the borrower's employees;

(4) Reserves required by a reserve bond agreement or other agreement legally binding on the borrower, that are dedicated to making required payments on debt secured under the RUS mortgage, not to exceed the amount of reserves specifically required by such agreements; and

(5) Investments included in an irrevocable trust approved by RUS and dedicated to the payment of decommissioning costs of nuclear facilities of the borrower.

(e) Grandfathered exclusions. All amounts of individual investments, loans, and guarantees excluded by RUS as of February 16, 1995 shall remain excluded. Such exclusions must have been based on the RUS mortgage, RUS loan contract, regulations, bulletins, memoranda, or other written notice from RUS. Profits, interest, and other returns earned (regardless of whether or not they are reinvested) on such investments, loans and guarantees after February 16, 1995 shall be excluded only if they are eligible for exclusion under paragraphs (a) through (d) of this section. Any new commitments of money to such investments, loans and guarantees shall likewise be excluded only if they are eligible under paragraphs (a) through (d) of this section.

(f) Any investment, loan or guarantee made by a borrower that is not excluded under this section or under §1717.657(d) shall be included in the aggregate amount of investments, loans and guarantees made by the borrower, regardless of whether RUS has specifically approved the investment, loan or guarantee under §1717.657(c), or has approved a related transaction (e.g., a lien accommodation).

§1717.656 Exemption of certain borrowers from controls.

(a) Any distribution or power supply borrower that meets all of the following criteria is exempted from the provisions of the RUS mortgage and loan contract that require RUS approval of investments, loans, and guarantees, except investments, loans, and guarantees made to extend, add to, or modify the borrower's electric system:

(1) The borrower is in compliance with all provisions of its RUS mortgage, RUS loan contract, and any other agreements with RUS;

(2) The average revenue per kWh for residential service received by the borrower during the two most recent calendar years does not exceed 130 percent of the average revenue per kWh for residential service during the same period for all residential consumers located in the state or states served by the borrower. This criterion applies only to distribution borrowers and does not apply to power supply borrowers. If a borrower serves customers in more than one state, the state average revenue per kWh will be based on a weighted average using the kWh sales by the borrower in each state as the weight. The calculation will be based on the two most recent calendar years for which both borrower and state-wide data are available. If a borrower fails to qualify for an exemption based solely on its failure to meet this criterion on rate disparity, at the borrower's request the Administrator may, at his or her sole discretion, exempt the borrower if he or she finds that the borrower's strengths with respect to the other criteria are sufficient to offset any weakness due to rate disparity;

(3) In the most recent calendar year for which data are available, the borrower achieved an operating TIER of at least 1.0 and an operating DSC of at least 1.0, in each case based on the average of the two highest ratios achieved in the three most recent calendar years;

(4) The borrower's ratio of net utility plant to long-term debt is at least 1.1, based on year-end data for the most recent calendar year for which data are available; and

(5) The borrower's equity is equal to at least 27 percent of its total assets, based on year-end data for the most recent calendar year for which data are available.

(b) While borrowers meeting the criteria in paragraph (a) of this section are exempt from RUS approval of investments, loans and guarantees, they are nevertheless subject to the recordkeeping, reporting, and other requirements of § 1717.658.

(c) Any borrower exempt under paragraph (a) of this section that ceases to meet the criteria for exemption shall, upon written notice from RUS, no longer be exempt and shall be subject to the provisions of this subpart applicable to non-exempt borrowers. A borrower may regain its exemption if it subsequently meets the criteria in paragraph (a) of this section, and is so notified in writing by RUS.

(d)(1) A borrower that loses its exemption and is not in compliance with all provisions of its mortgage, loan contract, or any other agreement with RUS may be required to restructure or reduce its portfolio of investments, loans and guarantees as provided in § 1717.653(b). If the borrower's portfolio exceeds the 15 percent level, the borrower will be required to restructure or reduce its portfolio to the 15 percent level or below. For example, if the borrower's mortgage or loan contract has an approval threshold, the borrower may be required to reduce its portfolio to that level, which in many cases is 3 percent of total utility plant.

(2) A borrower that loses its exemption but is in compliance with all provisions of its mortgage, loan contract, and any other agreements with RUS will be required, if its investments, loans and guarantees exceed the 15 percent level, to restructure or reduce its portfolio to the 15 percent level, unless the Administrator, in his or her sole discretion, determines that such action would not be in the financial interest of the government with respect to loan security and/or repayment. (Such borrower is eligible to ask RUS to exclude a portion of its investments under the conditions set forth in § 1717.657(d).)

(3) If a borrower required to reduce or restructure its portfolio does not fully comply within a reasonable period of time determined by the Administrator, which shall not exceed 12 months from the date the borrower was notified of its loss of exemption, then, upon written notice from RUS, the borrower shall be in default of its RUS loan contract and/or RUS mortgage.

(e) By no later than July 1 of each year, RUS will provide written notice to any borrowers whose exemption status has changed as a result of more recent data being available for the qualification criteria set forth in paragraph (a) of this section, or as a result of other reasons, such as corrections in the available data. An explanation of the reasons for any changes in exemption status will also be provided to the borrowers affected.

§ 1717.657 Investments above the 15 percent level by certain borrowers not exempt under § 1717.656(a).

(a) *General.* (1) This section applies only to borrowers that are in compliance with all provisions of their mortgage, loan contract, and any other agreements with RUS and that do not qualify for an exemption from RUS investment controls under § 1717.656(a).

(2) Nothing in this section shall in any way affect the Administrator's authority to exercise approval rights over investments, loans, and guarantees made by a borrower that is not in compliance with all provisions of its mortgage, loan contract and any other agreements with RUS.

(b) *Distribution borrowers.* Distribution borrowers not exempt from RUS investment controls under § 1717.656(a) may not make investments, loans and guarantees in an aggregate amount in excess of 15 percent of total utility plant. Above the 15 percent level, such borrowers will be restricted to excluded investments, loans and guarantees as defined in § 1717.655. (However, they are eligible to ask RUS to exclude a portion of their investments under the conditions set forth in paragraph (d) of this section.)

(c) *Power supply borrowers.* (1) Power supply borrowers not exempt from RUS investment controls under § 1717.656(a) may request approval to exceed the 15 percent level if all of the following criteria are met:

(i) Satisfactory evidence has been provided that the borrower is in compliance with all provisions of its RUS mortgage, RUS loan contract, and any other agreements with RUS;

(ii) The borrower is not in financial workout and has not had its government debt restructured;

(iii) The borrower has equity equal to at least 5 percent of its total assets; and

(iv) After approval of the investment, loan or guarantee, the aggregate of the borrower's investments, loans and guarantees will not exceed 20 percent of the borrower's total utility plant.

(2) Borrower requests for approval to exceed the 15 percent level will be considered on a case by case basis. The requests must be made in writing.

(3) In considering borrower requests, the Administrator will take the following factors into consideration:

(i) The repayment of all loans secured under the RUS mortgage will continue to be assured, and loan security must continue to be reasonably adequate, even if the entire investment or loan is lost or the borrower is required to perform for the entire amount of the guarantee. These risks will be considered along with all other risks facing the borrower, whether or not related to the investment, loan or guarantee;

(ii) In the case of investments, the investment must be made in an entity separate from the borrower, such as a subsidiary, whereby the borrower is protected from any liabilities incurred by the separate entity, unless the borrower demonstrates to the satisfaction of the Administrator that making the investment directly rather than through a separate entity will present no substantial risk to the borrower in addition to the possibility of losing all or part of the original investment;

(iii) The borrower must be economically and financially sound as indicated by its costs of operation, competitiveness, operating TIER and operating DSC, physical condition of the plant, ratio of equity to total assets, ratio of net utility plant to long-term debt, and other factors; and

(iv) Other factors affecting the security and repayment of government debt, as determined by the Administrator on a case by case basis.

(4) If the Administrator approves an investment, loan or guarantee, such investment, loan or guarantee will continue to be included when calculating the borrower's ratio of aggregate investments, loans and guarantees to total utility plant.

(d) *Distribution and power supply borrowers.* If the aggregate of the investments, loans and guarantees of a distribution or power supply borrower exceeds 15 percent of the borrower's total utility plant as a result of the cumulative profits or margins, net of losses, earned on said transactions over the past 10 calendar years (i.e., the sum of all profits earned during the 10 years on all transactions—including interest earned on cash accounts, loans, and similar transactions—less the sum of all losses experienced on all transactions during the 10 years) then:

(1) The borrower will not be in default of the RUS loan contract or RUS mortgage with respect to required approval of investments, loans and guarantees, provided that the borrower had not made additional net investments, loans or guarantees without approval after reaching the 15 percent level; and

(2) At the request of the borrower, the Administrator in his or her sole discretion may decide to exclude up to the amount of net profits or margins earned on the borrower's investments, loans and guarantees during the past 10 calendar years, if the Administrator determines that such exclusion will not increase loan security risks. The borrower must provide documentation satisfactory to the Administrator as to the current status of its investments, loans and guarantees and the net profits earned during the past 10 years. Any exclusion approved by the Administrator may or may not reduce the level of investments, loans and guarantees to or below the 15 percent level. If such exclusion does not reduce the level to or below the 15 percent level, RUS will notify the borrower in writing that it must reduce or restructure its investments, loans and guarantees to a level of not more than 15 percent of total utility plant. If the borrower does not come within the 15 percent level within a reasonable period of time determined by the Administrator, which shall not exceed 12 months from the date the borrower was notified of the required action, then, upon written notice from RUS, the borrower shall be in default of its RUS loan contract and mortgage.

§ 1717.658 Records, reports and audits.

(a) Every borrower shall maintain accurate records concerning all investments, loans and guarantees made by it. Such records shall be kept in a manner that will enable RUS to readily determine:

(1) The nature and source of all income, expenses and losses generated from the borrower's loans, guarantees and investments;

(2) The location, identity and lien priority of any loan collateral resulting from activities permitted by this subpart; and

(3) The effects, if any, which such activities may have on the feasibility of loans made, guaranteed or lien accommodated by RUS.

(b) In determining the aggregate amount of investments, loans and guarantees made by a borrower, the borrower shall use the recorded value of each investment, loan or guarantee as reflected on its books and records for the next preceding end-of-month, except for the end-of-year report which shall be based on December 31 information. Every borrower shall also report annually to RUS, in the manner and on the form specified by the Administrator, the current status of each investment, outstanding loan and outstanding guarantee which it has made pursuant to this subpart.

(c) The records of borrowers shall be subject to the auditing procedures prescribed in part 1773 of this chapter. RUS reserves the right to review the financial records of any subsidiaries of the borrower to determine if the borrower is in compliance with this subpart, and to ascertain if the debts, guarantees (as defined in this subpart), or other obligations of the subsidiaries could adversely affect the ability of the borrower to repay its debts to the Government.

(d) RUS will monitor borrower compliance with this subpart based primarily on the annual financial and statistical report submitted by the borrower to RUS and the annual auditor's report on the borrower's operations. However, RUS may inspect the borrower's records at any time during the year to determine borrower compliance. If a borrower's most recent annual financial and statistical report shows the aggregate of the borrower's investments, loans and guarantees to be below the 15 percent level, that in no way relieves the borrower of its obligation to comply with its RUS mortgage, RUS loan contract, and this subpart with respect to Administrator approval of any additional investment, loan or guarantee that would cause the aggregate to exceed the 15 percent level.

§ 1717.659 Effect of this subpart on RUS loan contract and mortgage.

(a) Nothing in this subpart shall affect any provision, covenant, or requirement in the RUS mortgage, RUS loan contract, or any other agreement between a borrower and RUS with respect to any matter other than the prior approval by RUS of investments, loans, and guarantees by the borrower, such matters including, without limitation, extensions, additions, and modifications of the borrower's electric system. Also, nothing in this subpart shall affect any rights which supplemental lenders have under the RUS mortgage, or under their loan contracts or other agreements with their borrowers, to limit investments, loans and guarantees by their borrowers to levels below 15 percent of total utility plant.

(b) RUS will require that any electric loan made or guaranteed by RUS after October 23, 1995 shall be subject to a provision in the loan contract or mortgage restricting investments, loans and guarantees by the borrower substantially as follows: The borrower shall not make any loan or advance to, or make any investment in, or purchase or make any commitment to purchase any stock, bonds, notes or other securities of, or guaranty, assume or otherwise become obligated or liable with respect to the obligations of, any other person, firm or corporation, except as permitted by the RE Act and RUS regulations.

(c) RUS reserves the right to change the provisions of the RUS mortgage and loan contract relating to RUS approval of investments, loans and guarantees made by the borrower, on a case-by-case basis, in connection with

providing additional financial assistance to a borrower after October 23, 1995.

Subpart O [Reserved]

§§1717.700—1717.749 [Reserved]

Subpart P [Reserved]

§§1717.750—1717.799 [Reserved]

Subpart Q [Reserved]

§§1717.800—1717.849 [Reserved]

Subpart R—Lien Accommodations and Subordinations for 100 Percent Private Financing

SOURCE: 58 FR 53843, Oct. 19, 1993, unless otherwise noted.

§1717.850 General.

(a) *Scope and applicability*. (1) This subpart R establishes policies and procedures for the accommodation, subordination or release of the Government's lien on borrower assets, including approvals of supporting documents and related loan security documents, in connection with 100 percent private sector financing of facilities and other purposes. Policies and procedures regarding lien accommodations for concurrent supplemental financing required in connection with an RUS insured loan are set forth in subpart S of this part.

(2) This subpart and subpart S of this part apply only to debt to be secured under the mortgage, the issuance of which is subject to the approval of the Rural Utilities Service (RUS) by the terms of the borrower's mortgage with respect to the issuance of additional debt or the refinancing or refunding of debt. If RUS approval is not required under such terms of the mortgage itself, a lien accommodation is not required. If the loan contract or other agreement between the borrower and RUS requires RUS approval with respect to the issuance of debt or making additions to or extensions of the borrower's system, such required approvals do not by themselves result in the need for a lien accommodation.

(b) *Overall policy*. (1) Consistent with prudent lending practices, the maintenance of adequate security for RUS's loans, and the objectives of the Rural Electrification Act (RE Act), it is the policy of RUS to provide effective and timely assistance to borrowers in obtaining financing from other lenders by sharing RUS's lien on a borrower's assets in order to finance electric facilities, equipment and systems, and certain other types of community infrastructure. In certain circumstances, RUS may facilitate the financing of such assets by subordinating its lien on specific assets financed by other lenders.

(2) It is also the policy of RUS to provide effective and timely assistance to borrowers in promoting rural development by subordinating RUS's lien for financially sound rural development investments under the conditions set forth in §1717.858.

(c) *Decision factors*. In determining whether to accommodate, subordinate, or release its lien on property pledged by the borrower under the RUS mortgage, RUS will consider the effects of such action on the achievement of the purposes of the RE Act, the repayment and security of RUS loans secured by the mortgage, and other factors set forth in this subpart. The following factors will be considered in assessing the effects on the repayment and security of RUS loans:

(1) The value of the added assets compared with the amount of new debt to be secured;

(2) The value of the assets already pledged under the mortgage, and any effects of the proposed transaction on the value of those assets;

(3) The ratio of the total outstanding debt secured under the mortgage to the value of all assets pledged as security under the mortgage;

(4) The borrower's ability to repay debt owed to the Government, as indicated by the following factors:

(i) Revenues, costs (including interest, lease payments and other debt service costs), margins, Times Interest Earned Ratio (TIER), Debt Service Coverage (DSC), and other case-specific economic and financial factors;

(ii) The variability and uncertainty of future revenues, costs, margins,

TIER, DSC, and other case-specific economic and financial factors;

(iii) Future capital needs and the ability of the borrower to meet those needs at reasonable cost;

(iv) The ability of the borrower's management to manage and control its system effectively and plan for future needs; and

(5) Other factors that may be relevant in individual cases, as determined by RUS.

(d) *Environmental considerations.* Under certain circumstances, such as when the project does not qualify for a categorical exclusion, the environmental requirements of 7 CFR part 1794 may apply to applications for lien accommodations, subordinations, and releases.

(e) *Co-mortgagees.* Other mortgagees under existing mortgages shared with RUS may have the right to approve requests for lien accommodations, subordinations and releases. In those cases, borrowers would have to obtain the approval of such mortgagees in order for the lien of the mortgage to be accommodated, subordinated or released. Any reference in this subpart to waiving by RUS of any of its rights under the mortgage shall apply only to the rights of RUS and shall not apply to the rights of any other co-mortgagee.

(f) *Safety and performance standards.* (1) To be eligible for a lien accommodation or subordination from RUS, a borrower must comply with RUS standards regarding facility and system planning and design, construction, procurement, and the use of materials accepted by RUS, as required by the borrower's mortgage, loan contract, or other agreement with RUS, and as further specified in RUS regulations.

(2) RUS ''Buy American'' requirements shall not apply.

(g) *Advance of funds.* (1) The advance of funds from 100 percent private loans lien accommodated or subordinated by RUS will not be subject to RUS approval. It is the private lender's responsibility to adopt reasonable measures to ensure that such loan funds are used for the purposes for which the loan was made and the lien accommodation or subordination granted. RUS encourages lenders to adopt the following measures:

(i) Remit loan advances to a separate subaccount of the Cash-Construction Fund-Trustee Account;

(ii) Obtain a certification from a registered professional engineer, for each year during which funds from the separate subaccount are utilized by the borrower, that all materials and equipment purchased and facilities constructed during the year from said funds comply with RUS safety and performance standards, as required by paragraph (f) of this section, and are included in an CWP or CWP amendment approved by the borrower's board of directors;

(iii) Obtain an auditor's certification from a Certified Public Accountant, for each year during which funds are advanced to or remitted from the separate subaccount, certifying:

(A) The amount of loan funds advanced to and remitted from the separate subaccount during the period of review;

(B) That based on the auditor's review of construction work orders and other records, all moneys disbursed from the separate subaccount during the period of review were used for purposes contemplated in the loan agreement and the lien accommodation; and

(iv) Immediately notify RUS in writing if the lender is unable to obtain the certifications cited in paragraphs (g)(1)(ii) and (g)(1)(iii) of this section.

(2) The measures listed in paragraph (g)(1) of this section will normally be sufficient to meet the lender's responsibility provided that additional measures are not reasonably required based on the particular circumstances of an individual case. Should a lender fail to carry out its responsibility in the manner described in this paragraph (g) or in another manner acceptable to RUS, RUS may disqualify such lender from participation in advance approval under §§ 1717.854 and 1717.857 and condition the lender's receipt of a lien accommodation or subordination upon the lender providing satisfactory evidence that it will fulfill its responsibility under this paragraph (g).

(h) *Contracting and procurement procedures.* (1) Facilities financed with debt obtained entirely from non-RUS sources, without an RUS loan guarantee, are not subject to RUS post-loan

requirements regarding contracting, procurement and bidding procedures; contract close-out procedures pertaining to project completion, final payment of contractor, and related matters; and standard forms of construction and procurement contracts listed in 7 CFR 1726.300.

(2) To the extent that provisions in a borrower's loan contract or mortgage in favor of RUS may be inconsistent with paragraphs (g)(1) and (h)(1) of this section, paragraphs (g)(1) and (h)(1) of this section are intended to constitute an approval or waiver under the terms of such instruments, and in any regulations implementing such instruments, with respect to facilities financed with debt obtained entirely from non-RUS sources without an RUS guarantee.

(i) *Access of handicapped to buildings and seismic safety*. A borrower must meet the following requirements to be eligible for a lien accommodation or subordination for 100 percent private financing of the construction of buildings:

(1) The borrower must provide RUS with a certification by the project architect that the buildings will be designed and constructed in compliance with Section 504 of the Rehabilitation Act of 1973 as amended (29 U.S.C. 794), as applicable under that Act, and that the facilities will be readily accessible to and usable by persons with handicaps in accordance with the Uniform Federal Accessibility Standards (UFAS), (Appendix A to 41 CFR part 101.19, subpart 101–19.6). The certification must be included in the borrower's application for a lien accommodation or subordination. In addition to these requirements, building construction may also be subject to requirements of The Americans with Disabilities Act (42 U.S.C. 12101 *et seq.*); and

(2) The borrower must comply with RUS's seismic safety requirements set forth in 7 CFR part 1792, subpart C.

(j) *Breach of warranty*. Any breach of any warranty or agreement or any material inaccuracy in any representation, warranty, certificate, document, or opinion submitted pursuant to this subpart, including, without limitation, any agreement or representation regarding the use of funds from loans lien accommodated or subordinated pursuant to this subpart, shall constitute a default by the borrower under the terms of its loan agreement with RUS.

(k) *Guaranteed loans.* The provisions of this subpart do not apply to lien accommodations or subordinations sought for loans guaranteed by RUS. Such lien accommodations and subordinations are governed by RUS regulations on guaranteed loans.

(l) *Release of lien*. To avoid repetition, release of lien is not mentioned in every instance where it may be an acceptable alternative to subordination of RUS's lien. Generally, lien subordination is favored over release of lien, and any decision to release RUS's lien is at the sole discretion of RUS.

(m) *Waiver authority*. Consistent with the RE Act and other applicable laws, any requirement, condition, or restriction imposed by this subpart, or subpart S of this part, on a borrower, private lender, or application for a lien accommodation or subordination may be waived or reduced by the Administrator, if the Administrator determines that said action is in the Government's financial interest with respect to ensuring repayment and reasonably adequate security for loans made or guaranteed by RUS.

(n) *Liability*. It is the intent of this subpart that any failure on the part of RUS to comply with any provisions hereof, including without limitation, those provisions setting forth specified timeframes for action by RUS on applications for lien accommodations or lien subordinations, shall not give rise to liability of any kind on the part of the Government or any employees of the Government including, without limitation, liability for damages, fees, expenses or costs incurred by or on behalf of a borrower, private lender or any other party.

[58 FR 53843, Oct. 19, 1993, as amended at 60 FR 67408, Dec. 29, 1995]

§1717.851 Definitions.

Terms used in this subpart have the meanings set forth in 7 CFR 1710.2. References to specific RUS forms and other RUS documents, and to specific sections or lines of such forms and documents, shall include the corresponding forms, documents, sections and lines in any subsequent revisions of

these forms and documents. In addition to the terms defined in 7 CFR 1710.2, the following terms have the following meanings for the purposes of this subpart:

Borrower's financial and statistical report means RUS Form 7, Parts A through D, for distribution borrowers, and RUS Form 12a for power supply borrowers.

Calendar day means any day of the year, except a Federal holiday that falls on a work day.

Capital investment. For the purposes of § 1717.860, capital investment means an original investment in an asset that is intended for long-term continued use or possession and, for accounting purposes, is normally depreciated or depleted as it is used. For example, such assets may include land, facilities, equipment, buildings, mineral deposits, patents, trademarks, and franchises. Original investments do not include refinancings or refundings.

Current refunding means any refunding of debt where the proceeds of the new debt are applied to refund the old debt within 90 days of the issuance of the new debt.

Default under the RUS mortgage, loan contract, restructuring agreement, or any other agreement between the borrower and RUS means any event of default or any event which, with the giving of notice or lapse of time or both, would become an event of default.

Equity, less deferred expenses, means Line 33 of Part C of RUS Form 7 less assets properly recordable in Account 182.2, Unrecovered Plant and Regulatory Study Costs, and Account 182.3, Other Regulatory Assets.

Front-end costs means the reasonable cost of engineering, architectural, environmental and other studies and plans needed to support the construction of facilities and other investments eligible for a lien accommodation or subordination under this subpart.

Lien accommodation means the sharing of the Government's (RUS's) lien on property, usually all property, covered by the lien of the RUS mortgage.

Lien subordination means allowing another lender to take a first mortgage lien on certain property covered by the lien of the RUS mortgage, and the Government (RUS) taking a second lien on such property.

Natural gas distribution system means any system of community infrastructure whose primary function is the distribution of natural gas and whose services are available by design to all or a substantial portion of the members of the community.

Net utility plant means Part C, Line 5 of RUS Form 7 (distribution borrowers) or Section B, Line 5 of RUS Form 12a (power supply borrowers).

Power cost study means the study defined in 7 CFR 1710.303.

Solid waste disposal system means any system of community infrastructure whose primary function is the collection and/or disposal of solid waste and whose services are available by design to all or a substantial portion of the members of the community.

Telecommunication and other electronic communication system means any system of community infrastructure whose primary function is the provision of telecommunication or other electronic communication services and whose services are available by design to all or a substantial portion of the members of the community.

Total assets, less deferred expenses means Line 26 of Part C of RUS Form 7 less assets properly recordable in Account 182.2, Unrecovered Plant and Regulatory Study Costs, and Account 182.3, Other Regulatory Assets.

Total outstanding long-term debt means Part C, Line 38 of RUS Form 7.

Transaction costs means the reasonable cost of legal advice, accounting fees, filing fees, recording fees, call premiums and prepayment penalties, financing costs (including, for example, underwriting commissions, letter of credit fees and bond insurance), and printing associated with borrower financing.

Water and waste disposal system means any system of community infrastructure whose primary function is the supplying of water and/or the collection and treatment of waste water and whose services are available by design to all or a substantial portion of the members of the community.

Weighted average life of the loan means the average life of the loan based on

the proportion of original loan principal paid during each year of the loan. It shall be determined by calculating the sum of all loan principal payments, expressed as a fraction of the original loan principal amount, times the number of years and fractions of years elapsed at the time of each payment since issuance of the loan. For example, given a $5 million loan, with a maturity of 5 years and equal principal payments of $1 million due on the anniversary date of the loan, the weighted average life would be: (.2)(1 year) + (.2)(2 years) + (.2)(3 years) + (.2)(4 years) + (.2)(5 years) = .2 years + .4 years + .6 years + .8 years + 1.0 years = 3.0 years. If instead the loan had a balloon payment of $5 million at the end of 5 years, the weighted average life would be: ($5 million/$5 million)(5 years) = 5 years.

[58 FR 53843, Oct. 19, 1993, as amended at 59 FR 3986, Jan. 28, 1994; 60 FR 67409, Dec. 29, 1995]

§1717.852 Financing purposes.

(a) *Purposes eligible.* The following financing purposes, except as excluded in paragraph (b) of this section, are eligible for a lien accommodation from RUS, or in certain circumstances a subordination of RUS's lien on specific assets, provided that all applicable provisions of this subpart are met:

(1) The acquisition, construction, improvement, modification, and replacement (less salvage value) of systems, equipment, and facilities, including real property, used to supply electric and/or steam power to:

(i) RE Act beneficiaries; and/or

(ii) End-user customers of the borrower who are not beneficiaries of the RE Act. Such systems, equipment, and facilities include those listed in 7 CFR 1710.251(c) and 1710.252(c), as well as others that are determined by RUS to be an integral component of the borrower's system of supplying electric and/or steam power to consumers, such as, for example, coal mines, coal handling facilities, railroads and other transportation systems that supply fuel for generation, programs of demand side management and energy conservation, and on-grid and off-grid renewable energy systems;

(2) The purchase, rehabilitation and integration of existing distribution facilities, equipment and systems, and associated service territory;

(3) The following types of community infrastructure substantially located within the electric service territory of the borrower: water and waste disposal systems, solid waste disposal systems, telecommunication and other electronic communications systems, and natural gas distribution systems;

(4) Front-end costs, when and as the borrower has obtained a binding commitment from the non-RUS lender for the financing required to complete the procurement or construction of the facilities;

(5) Transaction costs included as part of the cost of financing assets or refinancing existing debt, provided, however, that the amount of transaction costs eligible for lien accommodation or subordination normally shall not exceed 5 percent of the principal amount of financing or refinancing provided, net of all transaction costs;

(6) The refinancing of existing debt secured under the mortgage;

(7) Interest during construction of generation and transmission facilities if approved by RUS, case by case, depending on the financial condition of the borrower, the terms of the financing, the nature of the construction, the treatment of these costs by regulatory authorities having jurisdiction, and such other factors deemed appropriate by RUS; and

(8) Lien subordinations for certain rural development investments, as provided in §1717.858.

(b) *Purposes ineligible.* The following financing purposes are not eligible for a lien accommodation or subordination from RUS:

(1) Working capital, including operating funds, unless in the judgment of RUS the working capital is required to ensure the repayment of RUS loans and/or other loans secured under the mortgage;

(2) Facilities, equipment, appliances, or wiring located inside the premises of the consumer, except:

(i) Certain load-management equipment (see 7 CFR 1710.251(c));

(ii) Renewable energy systems and RUS-approved programs of demand side management and energy conservation; and

(iii) As determined by RUS on a case by case basis, facilities included as part of certain cogeneration projects to furnish electric and/or steam power to end-user customers of the borrower;

(3) Investments in a lender required of the borrower as a condition for obtaining financing; and

(4) Debt incurred by a distribution or power supply borrower to finance facilities, equipment or other assets that are not part of the borrower's electric system or one of the four community infrastructure systems cited in paragraph (a)(3) of this section, except for certain rural development investments eligible for a lien subordination under § 1717.858.

(c) *Lien subordination for electric utility investments.* RUS will consider subordinating its lien on specific electric utility assets financed by the lender, when the assets can be split off without materially reducing the stability, safety, reliability, operational efficiency, or liquidation value of the rest of the system.

[58 FR 53843, Oct. 19, 1993, as amended at 59 FR 3986, Jan. 28, 1994; 60 FR 67409, Dec. 29, 1995]

§ 1717.853 Loan terms and conditions.

(a) *Terms and conditions.* A loan, bond or other financing instrument, for which a lien accommodation or subordination is requested from RUS, must comply with the following terms and conditions:

(1) The maturity of the loan or bond used to finance facilities or other capital assets must not exceed the weighted average of the expected remaining useful lives of the assets being financed;

(2) The loan or bond must have a maturity of not less than 5 years, except for loans or bonds used to refinance debt that has a remaining maturity of less than 5 years;

(3) The principal of the loan or bond must be amortized at a rate that will yield a weighted average life not greater than the weighted average life that would result from level payments of principal and interest; and

(4) The loan, or any portion of the loan, may bear either a variable (set annually or more frequently) or a fixed interest rate.

(b) *RUS approval.* Loan terms and conditions and the loan agreement between the borrower and the lender are subject to RUS approval. However, RUS will usually waive its right of approval for distribution borrowers that meet the conditions for advance approval of a lien accommodation or subordination set forth in § 1717.854. RUS may also waive its right of approval in other cases. RUS's decision to waive its right of approval will depend on the adequacy of security for RUS's loans, the current and projected financial strength of the borrower and its ability to meet its financial obligations, RUS's familiarity with the lender and its lending practices, whether the transaction is ordinary or unusual, and the uncertainty and credit risks involved in the transaction.

§ 1717.854 Advance approval—100 percent private financing of distribution, subtransmission and headquarters facilities, and certain other community infrastructure.

(a) *Policy.* Requests for a lien accommodation or subordination from distribution borrowers for 100 percent private financing of distribution, subtransmission and headquarters facilities, and for community infrastructure listed in § 1717.852(a)(3), qualify for advance approval by RUS if they meet the conditions of this section and all other applicable provisions of this subpart. Advance approval means RUS will approve these requests once RUS is satisfied that the conditions of this section and all other applicable provisions of this subpart have been met.

(b) *Eligible purposes.* Lien accommodations or subordinations for the financing of distribution, subtransmission, and headquarters facilities and community infrastructure listed in § 1717.852(a)(3) are eligible for advance approval, except those that involve the purchase of existing facilities and associated service territory.

(c) *Qualification criteria.* To qualify for advance approval, the following requirements, as well as all other applicable requirements of this subpart, must be met:

(1) The borrower has achieved a TIER of at least 1.5 and a DSC of at least 1.25 for each of 2 calendar years immediately preceding, or any 2 consecutive

12 month periods ending within 180 days immediately preceding, the issuance of the debt;

(2) The ratio of the borrower's equity, less deferred expenses, to total assets, less deferred expenses, is not less than 27 percent, after adding the principal amount of the proposed loan to the total assets of the borrower;

(3) The borrower's net utility plant as a ratio to its total outstanding long-term debt is not less than 1.0, after adding the principal amount of the proposed loan to the existing outstanding long-term debt of the borrower;

(4) There are no actions or proceedings against the borrower, pending or overtly threatened in writing before any court, governmental agency, or arbitrator that would materially adversely affect the borrower's operations and/or financial condition;

(5) The borrower is current on all debt payments and all other financial obligations, and is not in default under the RUS mortgage, the RUS loan contract, the borrower's wholesale power contract, any debt restructuring agreement, or any other agreement with RUS;

(6) The borrower has:

(i) Submitted the annual auditor's report, report on compliance, report on internal controls, and management letter in accordance with 7 CFR part 1773;

(ii) Received an unqualified opinion in the most recent auditor's report;

(iii) Resolved all material findings and recommendations made in the most recent Loan Fund and Accounting Review;

(iv) Resolved all material findings and recommendations made in the most recent financial statement audit, including those material findings and recommendations made in the report on internal control, report on compliance, and management letter;

(v) Resolved all outstanding material accounting issues with RUS; and

(vi) Resolved any significant irregularities to RUS's satisfaction; and

(7) If the borrower has a power supply contract with a power supply borrower, the power supply borrower is current on all debt payments and all other financial obligations, and is not in default under the RUS mortgage, the loan contract, any debt restructuring agreement, or any other agreement with RUS.

(d) *Right of normal review reserved.* RUS reserves the right to review any request for lien accommodation or subordination under its normal review process rather than under advance approval procedures if RUS, in its sole discretion, determines there is reasonable doubt as to whether the requirements of paragraphs (b) and (c) of this section have been or will be met, or whether the borrower will be able to meet all of its present and future financial obligations.

[58 FR 53843, Oct. 19, 1993, as amended at 60 FR 67410, Dec. 29, 1995]

§1717.855 Application contents: Advance approval—100 percent private financing of distribution, subtransmission and headquarters facilities, and certain other community infrastructure.

Applications for a lien accommodation or subordination that meet the requirements of §1717.854 must include the following information and documents:

(a) A certification by an authorized official of the borrower that the borrower and, as applicable, the loan are in compliance with all conditions set forth in §1717.854(c) and all applicable provisions of §§1717.852 and 1717.853;

(b) A resolution of the borrower's board of directors requesting the lien accommodation or subordination and including the amount and maturity of the proposed loan, a general description of the facilities or other purposes to be financed, the name and address of the lender, and an attached term sheet summarizing the terms and conditions of the proposed loan;

(c) The borrower's financial and statistical report, the data in which shall not be more than 60 days old when the complete application is received by RUS;

(d) Draft copy of any new mortgage or mortgage amendment (supplement) required by RUS or the lender, unless RUS has notified the borrower that it wishes to prepare these documents itself;

(e) A copy of the loan agreement, loan note, bond or other financing instrument, unless RUS has notified the

borrower that these documents need not be submitted;

(f) Borrower's environmental report and/or other environmental documentation, if required by 7 CFR part 1794;

(g) RUS Form 740c, Cost Estimates and Loan Budget for Electric Borrowers, and RUS Form 740g, Application for Headquarters Buildings;

(h) A CWP or CWP amendment covering the proposed project, in accordance with 7 CFR part 1710, subpart F, and subject to RUS approval, and a resolution of the borrower's board of directors adopting the CWP;

(i) The certification by the project architect for any buildings to be constructed, as required by § 1717.850(i);

(j) A certification by an authorized official of the borrower that flood hazard insurance will be obtained for the full value of any buildings, or other facilities susceptible to damage if flooded, that will be located in a flood hazard area;

(k) Form AD-1047, Certification Regarding Debarment, Suspension, and Other Responsibility Matters—Primary Covered Transactions, as required by 7 CFR part 3017;

(l) A report by the borrower stating whether or not it is delinquent on any Federal debt, and if delinquent, the amount and age of the delinquency and the reasons therefor; and a certification, if not previously provided, that the borrower has been informed of the Government's collection options;

(m) The written acknowledgement from a registered engineer or architect regarding compliance with seismic provisions of applicable model codes for any buildings to be constructed, as required by 7 CFR 1792.104; and

(n) Other information that RUS may require to determine whether all of the applicable provisions of this subpart have been met.

[58 FR 53843, Oct. 19, 1993, as amended at 60 FR 67410, Dec. 29, 1995]

§ 1717.856 Application contents: Normal review—100 percent private financing.

Applications for a lien accommodation or subordination for 100 percent private financing for eligible purposes that do not meet the requirements of § 1717.854 must include the following information and documents:

(a) A certification by an authorized official of the borrower that:

(1) The borrower and, as applicable, the loan are in compliance with all applicable provisions of §§ 1717.852 and 1717.853; and

(2) There are no actions or proceedings against the borrower, pending or overtly threatened in writing before any court, governmental agency, or arbitrator that would materially adversely affect the borrower's operations and/or financial condition. If this certification cannot be made, the application must include:

(i) An opinion of borrower's counsel regarding any actions or proceedings against the borrower, pending or overtly threatened in writing before any court, governmental agency, or arbitrator that would materially adversely affect the borrower's operations and/or financial condition. The opinion shall address the merits of the claims asserted in the actions or proceedings, and include, if appropriate, an estimate of the amount or range of any potential loss; and

(ii) A certification by an authorized official of the borrower as to the amount of any insurance coverage applicable to any loss that may result from the actions and proceedings addressed in the opinion of borrower's counsel;

(b) The information and documents set forth in § 1717.855 (b) through (n);

(c) A long-range financial forecast providing financial projections for at least 10 years, which demonstrates that the borrower's system is economically viable and that the proposed loan is financially feasible, and a resolution of the borrower's board of directors adopting the long-range financial forecast. The financial forecast must comply with the requirements of 7 CFR part 1710 subpart G. RUS may, in its sole discretion, waive the requirement of this paragraph that a long range financial forecast be provided, if:

(1) The borrower is current on all of its financial obligations and is in compliance with all requirements of its mortgage and loan agreement with RUS;

(2) In RUS's judgment, granting a lien accommodation or subordination for the proposed loan will not adversely affect the repayment and security of outstanding debt of the borrower owed to or guaranteed by RUS;

(3) The borrower has achieved the TIER and DSC and any other coverage ratios required by its mortgage or loan contract in each of the two most recent calendar years; and

(4) The amount of the proposed loan does not exceed the lesser of $10 million or 10 percent of the borrower's current net utility plant;

(d) [Reserved]

(e) As applicable to the type of facilities being financed, a CWP, related engineering and cost studies, a power cost study, and a resolution of the borrower's board of directors adopting these documents. These documents must meet the requirements of 7 CFR part 1710, subpart F and, as applicable, subpart G;

(f) Unless the requirement has been waived in writing by RUS, a current, RUS-approved power requirements study, which must meet the requirements of 7 CFR part 1710, subpart E, to the same extent as if the loan were being made by RUS, and a resolution of the borrower's board of directors adopting the study; and

(g) A discussion of the borrower's compliance with RUS requirements on accounting, financial reporting, record keeping, and irregularities (see §1717.854(c)(5)). RUS will review the case and determine the effect of any noncompliance on the feasibility and security of RUS's loans, and whether the requested lien accommodation or subordination can be approved.

[58 FR 53843, Oct. 19, 1993, as amended at 60 FR 3735, Jan. 19, 1995; 60 FR 67410, Dec. 29, 1995]

§1717.857 Refinancing of existing secured debt—distribution and power supply borrowers.

(a) *Advance approval.* All applications for a lien accommodation or subordination for the refinancing of existing secured debt that meet the qualification criteria of this paragraph, except applications from borrowers in default under their mortgage or loan contract with RUS, are eligible for advance approval. Such lien accommodations and subordinations are deemed to be in the Government's interest, and RUS will approve them once RUS is satisfied that the requirements of this paragraph and paragraph (c) of this section have been met. The qualification criteria are as follows:

(1) The refinancing is a current refunding and does not involve interest rate swaps, forward delivery contracts, or similar features;

(2) The principal amount of the refinancing loan does not exceed the sum of the outstanding principal amount of the debt being refinanced plus the amount of transactions costs included in the refinancing loan that are eligible for lien accommodation or subordination under §1717.852(a)(4);

(3) The weighted average life of the refinancing loan is not greater than the weighted average remaining life of the loan being refinanced; and

(4) The present value of the cost of the refinancing loan, including all transaction costs and any required investments in the lender, is less than the present value of the cost of the loan being refinanced, as determined by a method acceptable to RUS. The discount rate used in the present value analysis shall be equal to either:

(i) The current rate on Treasury securities having a maturity equal to the weighted average life of the refunding loan, plus one-eighth percent, or

(ii) A rate approved by RUS based on documentation provided by the borrower as to its marginal long-term borrowing cost.

(b) *Other applications.* Applications for a lien accommodation or subordination for refinancing that do not meet the requirements of paragraph (a) of this section will be reviewed by RUS under normal review procedures for these applications. In the case of either advance approval or normal review, a lien subordination would be authorized only if the lien of the mortgage was subordinated with respect to the assets securing the loan being refinanced.

(c) *Application contents—advance approval of refinancing.* Applications for a lien accommodation or subordination for refinancing of existing secured debt that meet the qualification criteria for

advance approval set forth in paragraph (a) of this section, must include the following information and documents:

(1) A certification by an authorized official of the borrower that the application meets the requirements of paragraph (a) of this section and all applicable provisions of §§ 1717.852 and 1717.853;

(2) Documentation and analysis demonstrating that the application meets the qualification criteria set forth in paragraph (a) of this section;

(3) A resolution of the borrower's board of directors requesting the lien accommodation or subordination and including the amount and maturity of the proposed loan, a general description of the debt to be refinanced, the name and address of the lender, and an attached term sheet summarizing the terms and conditions of the proposed loan;

(4) The borrower's financial and statistical report, the data in which shall not be more than 60 days old when the complete application is received by RUS;

(5) Draft copy of any new mortgage or mortgage amendment (supplement) required by RUS or the lender, unless RUS has notified the borrower that it wishes to prepare these documents itself;

(6) A copy of the loan agreement, loan note, bond or other financing instrument, unless RUS has notified the borrower that these documents need not be submitted;

(7) Form AD-1047, Certification Regarding Debarment, Suspension, and Other Responsibility Matters—Primary Covered Transactions, as required by 7 CFR part 3017;

(8) A report by the borrower stating whether or not it is delinquent on any Federal debt, and if delinquent, the amount and age of the delinquency and the reasons therefor; and a certification, if not previously provided, that the borrower has been informed of the Government's collection options; and

(9) Other information, documents and opinions that RUS may require to determine whether all of the applicable provisions of this subpart have been met.

(d) *Application contents—normal review of refinancing.* Applications for a lien accommodation or subordination for refinancing of existing secured debt that do not meet the requirements for advance approval set forth in paragraph (a) of this section, must include the following information and documents:

(1) The information and documents set forth in paragraphs (c)(3) through (9) of this section;

(2) A complete description of the refinancing loan and the outstanding debt to be refinanced;

(3) An analysis comparing the refinancing loan with the loan being refinanced as to the weighted average life and the net present value of the costs of the two loans; and

(4) If the present value of the cost of the refinancing loan is greater than the present value of the cost of the debt being refinanced, financial forecasts for at least 5 years comparing the borrower's debt service and other costs, revenues, margins, cash flows, TIER, and DSC, with and without the proposed refinancing.

(e) *Application process and timeframes.* The application process and timeframes for RUS review and action for refinancings are set forth in § 1717.859(d).

(f) *Prepayments of concurrent RUS insured loans.* If the loan being refinanced was made concurrently as supplemental financing required by RUS in connection with an RUS insured loan, the refinancing will not be considered a prepayment under the RUS mortgage, and no proportional prepayment of the concurrent RUS insured loan will be required, provided that the principal amount of the refinancing loan is not less than the amount of loan principal being refinanced, and the weighted average life of the refinancing loan is materially equal to the weighted average remaining life of the loan being refinanced. The refinancing loan shall be considered a concurrent loan.

[58 FR 53843, Oct. 19, 1993, as amended at 60 FR 67410, Dec. 29, 1995]

§ 1717.858 Lien subordination for rural development investments.

(a) *Policy.* RUS encourages borrowers to consider investing in financially

sound projects that are likely to have a positive effect on economic development and employment in rural areas. In addition to the guidance set forth in §1717.651, RUS recommends that such investments be made through a subsidiary of the borrower in order to clearly separate the financial risks and the revenues and costs of the rural development enterprise from those of the borrower's electric utility business. This should reduce credit risks to the borrower's primary business, and minimize the possibility of undisclosed cross subsidization of the rural development enterprise by electric rate payers.

(b) *Lien subordination.* RUS will consider subordinating or releasing its lien on the stock held by a borrower in a subsidiary whose primary business directly contributes to or supports economic development and employment in rural areas, as defined in section 13 of the RE Act, when requested by a lender to the subsidiary, other than the borrower. To be eligible for said lien subordination or release:

(1) The borrower must be current on all of its financial obligations and be in compliance with all provisions of its mortgage and loan agreement with RUS; and

(2) In the judgment of RUS, the borrower must be able to repay all of its outstanding debt, and the security forall outstanding loans made to the borrower by RUS, including loans guaranteed by RUS, must be adequate, after taking into account the proposed subordination or release of lien.

(c) *Application contents.* Applications for a lien subordination or release of lien for rural development investments must include the following information and documents:

(1) A resolution of the borrower's board of directors requesting the lien subordination or release of lien;

(2) A certification by an authorized official of the borrower that the borrower is current on all of its financial obligations and is in compliance with all provisions of its mortgage and loan agreement with RUS;

(3) A description of the facilities or other purposes to be financed and the projected effects on economic development and employment in rural areas;

(4) The borrower's financial and statistical report, the data in which shall not be more than 60 days old when the complete application is received by RUS;

(5) If requested by RUS, a long-range financial forecast providing financial projections for at least 10 years, in form and substance satisfactory to RUS, which demonstrates that the borrower's system is economically viable and that the borrower will be able to repay all of its outstanding debt and meet all other financial obligations;

(6) A discussion of the borrower's compliance with RUS requirements on accounting, financial reporting, record keeping, and irregularities (see §1717.854(c)(5)). RUS will review the case and determine the effect of any noncompliance on the feasibility and security of RUS's loans, and whether the requested lien subordination or release of lien can be approved;

(7) If any buildings are to be constructed with the proceeds of the loan to be made to the subsidiary:

(i) A certification by the project architect that the buildings will be designed and constructed in compliance with Section 504 of the Rehabilitation Act of 1973 as amended (29 U.S.C. 794), as applicable under that Act, and that the facilities will be readily accessible to and usable by persons with handicaps in accordance with the Uniform Federal Accessibility Standards; and

(ii) A written acknowledgement from a registered engineer or architect regarding compliance with seismic provisions of applicable model codes, as required by 7 CFR 1792.104;

(8) A certification by an authorized official of the borrower that flood hazard insurance will be obtained for the full value of any buildings, or other facilities susceptible to damage if flooded, that will be located in a flood hazard area;

(9) Form AD-1047, Certification Regarding Debarment, Suspension, and Other Responsibility Matters—Primary Covered Transactions, as required by 7 CFR part 3017;

(10) A report by the borrower stating whether or not it is delinquent on any Federal debt, and if delinquent, the amount and age of the delinquency and

the reasons therefor; and a certification, if not previously provided, that the borrower has been informed of the Government's collection options; and

(11) Other information that RUS may require to determine whether all of the applicable provisions of this subpart have been met.

§ 1717.859 Application process and timeframes.

(a) *General.* (1) Borrowers are responsible for ensuring that their applications for a lien accommodation or subordination are complete and sound as to substance and form before they are submitted to RUS. RUS will not accept any application that, on its face, is incomplete or inadequate as to the substantive information required by this subpart. RUS will notify borrowers in writing when their applications are complete and in form and substance satisfactory to RUS. A copy of all notifications of borrowers cited in this section will also be sent to the private lender.

(2) It is recommended that borrowers consult with RUS staff before submitting their applications to determine whether they will likely qualify for advance approval or normal review, and to obtain answers to any questions about the information and documents required for the application.

(3) A borrower shall, after submitting an application, promptly notify RUS of any changes that materially affect the information contained in its application.

(4) After submitting an application and having been notified by RUS of additional information and documents and other changes needed to complete the application, if the required information and documents are not supplied to RUS within 30 calendar days of the borrower's receipt of the notice, RUS may return the application to the borrower. The borrower may resubmit the application when the required additional information and documents are available.

(5) Timeframes. The timeframes for review of applications set forth in this section are based on the following conditions:

(i) The types of lien accommodations or subordinations requested are of the ''standard'' types that RUS has approved previously, i.e., the so-called Type I, II and III lien accommodations. Future revisions of the RUS mortgage may result in other ''standard'' types of lien accommodations and lien subordinations acceptable to RUS. Requests for lien accommodations or subordinations that are substantially different than the ''standard'' types previously approved by RUS may require additional time for review and action;

(ii) The requested lien accommodation or subordination does not require the preparation of an environmental assessment or an Environmental Impact Statement. Preparation of these documents often will require additional time beyond the timeframes cited in this section; and

(iii) The timeframes set forth in this section, except for paragraph (b)(4) of this section, which deals only with approval of a new mortgage or mortgage amendment, include RUS review and/or approval of a loan contract, if required as part of the application, and required supporting documents, such as a CWP.

(b) *Advance approval—100 percent private financing of distribution, subtransmission, and headquarters facilities.* (1) Applications that qualify under § 1717.854 for advance approval of a lien accommodation or subordination for 100 percent private financing of distribution, subtransmission, and headquarters facilities are submitted to the general field representative (GFR). The GFR will work with the borrower to ensure that all components of the application are assembled. Once the application is satisfactory to the GFR, it will be sent promptly to the Washington office for further review and action. If a new mortgage or mortgage amendment is required, a draft of these documents must be included in the application, unless the borrower has been notified that RUS wishes to prepare the documents itself.

(2) If no additional or amended information is needed for RUS to complete its review of the application once it is received in the Washington Office, RUS will, within 45 calendar days of receiving the application in the Washington Office, either:

(i) Approve the lien accommodation or subordination if the borrower has

demonstrated satisfactorily to RUS that all requirements of this subpart applicable to advance approval have been met, and send written notice to the borrower. RUS's approval, in this case and all other cases, will be conditioned upon execution and delivery by the borrower of a satisfactory security instrument, if required, and such additional information, documents, and opinions of counsel as RUS may require;

(ii) If all requirements have not been met, so notify the borrower in writing. The application will be returned to the borrower unless the borrower requests that it be reconsidered under the requirements and procedures for normal review set forth in paragraph (c) of this section and in § 1717.856; or

(iii) Send written notice to the borrower explaining why a decision cannot be made at that time and giving the estimated date when a decision is expected.

(3) If additional or amended information is needed after the application is received in the Washington Office, RUS will so notify the borrower in writing within 15 calendar days of receiving the application in the Washington Office. If RUS subsequently becomes aware of other deficiencies in the application, additional written notice will be sent to the borrower. Within 30 calendar days of receiving all of the information required by RUS to complete its review, RUS will act on the application as described in paragraphs (b)(2)(i) through (b)(2)(iii) of this section.

(4) If a new mortgage or mortgage amendment is required, within 30 days of receiving such documents satisfactory to RUS, including required execution counterparts, RUS will execute the documents and send them to the borrower, along with instructions pertaining to recording of the mortgage, an opinion of borrower's counsel, and other matters. RUS will promptly notify the borrower upon receiving satisfactory evidence that the borrower has complied with said instructions.

(c) *Normal review—100 percent private financing of distribution, transmission, and/or generation facilities*—(1) *Distribution borrowers.* (i) Applications from distribution borrowers for a lien accommodation or subordination for 100 percent private financing of distribution, transmission, and/or generation facilities (including other eligible electric utility purposes) that do not meet the criteria for advance approval, are also submitted to the GFR. Procedures at this stage are the same as in paragraph (b)(1) of this section.

(ii) If no additional or amended information is needed for RUS to complete its review of the application once it is received in the Washington office, RUS will, within 90 calendar days of receiving the application in the Washington office, send written notice to the borrower either approving the request, disapproving the request, or explaining why a decision cannot be made at that time and giving the estimated date when a decision is expected.

(iii) If additional or amended information is needed after the application is received in the Washington Office, RUS will so notify the borrower in writing within 15 calendar days of receiving the application in the Washington Office. If RUS subsequently becomes aware of other deficiencies in the application, additional written notice will be sent to the borrower. Within 90 calendar days of receiving all of the information required by RUS to complete its review, RUS will act on the application as described in paragraph (c)(1)(ii) of this section.

(iv) If a new mortgage or mortgage amendment is required, the procedures and timeframes of paragraph (b)(4) of this section will apply.

(2) *Power supply borrowers.* (i) Applications from power supply borrowers for a lien accommodation or subordination for 100 percent private financing of distribution, transmission, and/or generation facilities, and other eligible electric utility purposes, are submitted to the RUS Power Supply Division, or its successor, in Washington, DC.

(ii) Within 30 calendar days of receiving the borrower's application containing the information and documents required by § 1717.856, RUS will send written notice to the borrower of any deficiencies in its application as to completeness and acceptable form and substance. Additional written notices may be sent to the borrower if RUS subsequently becomes aware of other deficiencies in the borrower's application.

(iii) Within 90 calendar days of receiving all of the information required by RUS to complete its review, RUS will act on the application as described in paragraph (c)(1)(ii) of this section.

(iv) If a new mortgage or mortgage amendment is required, these documents will be reviewed and executed pursuant to the procedures and timeframes of paragraph (b)(4) of this section.

(d) *Refinancing of existing debt.* All requests for a lien accommodation or subordination for refinancing are sent directly to the Washington office.

(1) *Advance approval.* (i) Within 15 calendar days of receiving the borrower's application containing the information and documents required by § 1717.857(c), RUS will send written notice to the borrower of any deficiencies in its application as to completeness and acceptable form and substance. Additional written notices may be sent to the borrower if RUS subsequently becomes aware of other deficiencies in the borrower's application.

(ii) Within 15 calendar days of receiving all of the required information and documents, in form and substance satisfactory to RUS, RUS will either:

(A) Approve the lien accommodation or subordination if the borrower has demonstrated satisfactorily to RUS that all requirements of § 1717.857(a) and (c) have been met, and send written notice to the borrower;

(B) If all requirements have not been met, so notify the borrower in writing. The application will be returned to the borrower unless the borrower requests that it be reconsidered under the requirements and procedures for normal review set forth in paragraph (d)(2) of this section and in § 1717.857; or

(C) Send written notice to the borrower explaining why a decision cannot be made at that time and giving the estimated date when a decision is expected.

(iii) If a new mortgage or mortgage amendment is required, these documents will be reviewed and executed pursuant to the procedures and timeframes of paragraph (b)(4) of this section.

(2) *Normal review.* (i) Within 20 calendar days of receiving the borrower's application containing the information and documents required by § 1717.857(d), RUS will send written notice to the borrower of any deficiencies in its application as to completeness and acceptable form and substance. Additional written notices may be sent to the borrower if RUS subsequently becomes aware of other deficiencies in the borrower's application.

(ii) Within 30 calendar days of receiving all of the required information and documents, in form and substance satisfactory to RUS, RUS will notify the borrower in writing either approving the request, disapproving the request, or explaining why a decision cannot be made at that time and giving the estimated date when a decision is expected. If the proposed refinancing involves complicated transactions such as interest rate swaps or forward delivery contracts, additional time may be required for RUS review and final action.

(iii) If a new mortgage or mortgage amendment is required, these documents will be reviewed and executed pursuant to the procedures and timeframes of paragraph (b)(4) of this section.

(e) *Rural development investments.* (1) Applications for a lien subordination for rural development investments are submitted by distribution borrowers to the GFR and by power supply borrowers to the RUS Power Supply Division, or its successor, in Washington, DC.

(2) The GFR will work with the borrower to ensure that all components of the application are assembled. Once the application is satisfactory to the GFR, it will be sent promptly to the Washington Office for further review and action. After the application is received in the Washington Office, if additional or amended information is needed for RUS to complete its review, RUS will so notify the borrower in writing within 15 calendar days of receiving the application.

(3) Applications from power supply borrowers containing the information and documents required by § 1717.858(c) will be reviewed in the Washington office and the borrower given written notice within 30 calendar days of receiving the application of any deficiencies as to completeness and acceptable form

and substance. Additional written notices may be sent to the borrower if RUS subsequently becomes aware of other deficiencies in the borrower's application.

(4) Within 60 calendar days of receiving in the Washington office all of the required information and documents, in form and substance satisfactory to RUS, RUS will give written notice to the borrower either approving the request, disapproving the request, or explaining why a decision cannot be made at that time and giving the estimated date when a decision is expected.

(5) If a new mortgage or mortgage amendment is required, these documents will be reviewed and executed pursuant to the procedures and timeframes of paragraph (b)(4) of this section.

§1717.860 Lien accommodations and subordinations under section 306E of the RE Act.

(a) *General.* Under section 306E of the RE Act, when requested by a private lender providing financing for capital investments by a borrower whose net worth exceeds 110 percent of the outstanding principal balance of all loans made or guaranteed to the borrower by RUS, the Administrator will, without delay, offer to share the government's lien on the borrower's system or subordinate the government's lien on the property financed by the private lender, provided that the security, including the assurance of repayment, for loans made or guaranteed by RUS will remain reasonably adequate. To qualify for a lien accommodation or subordination under this section, the investment must be an original capital investment, i.e., not a refinancing or refunding. (See §1717.851 for the definition of capital investment.)

(b) *Determination of net worth to RUS debt ratio.* (1) In the case of applications for a lien accommodation, a borrower's net worth will be based on the borrower's most recent financial and statistical report, the data in which shall not be more than 60 days old at the time the application is received by RUS, and the outstanding debt owed to or guaranteed by RUS will be based on latest RUS records available. The financial and statistical reports (Form 7 for distribution borrowers and Form 12a for power supply borrowers) are subject to RUS review and revision, and they must comply with RUS's system of accounts and accounting principles set forth in 7 CFR part 1767. Since sinking fund depreciation is not approved under part 1767, net worth for borrowers using sinking fund depreciation will be calculated as if the borrower had been using straight line depreciation.

(2) Net worth shall be calculated by taking total margins and equities (Line 33 of Part C of RUS Form 7 for distribution borrowers, or Line 34 of Section B of RUS Form 12a for power supply borrowers) and subtracting assets properly recordable in account 182.2, Unrecovered Plant and Regulatory Study Costs, and account 182.3, Other Regulatory Assets, as defined in 7 CFR part 1767.

(c) *Application requirements and process.* (1) If a borrower's net worth to RUS debt ratio exceeds 110 percent, as determined by RUS, and the borrower is in compliance with all requirements of its mortgage, loan agreement with RUS, and any other agreement with RUS that have not been exempted in writing by RUS, if requested RUS will expeditiously approve a lien accommodation or subordination for 100 percent private financing of capital investments, provided that the security, including the assurance of repayment, for loans made or guaranteed by RUS will remain reasonably adequate. RUS's approval will be conditioned upon execution and delivery by the borrower of a security instrument satisfactory to RUS, if required, and such additional information, documents, and opinions of counsel as RUS may require.

(2) The application must include the following:

(i) A resolution of the borrower's board of directors requesting the lien accommodation and including the amount and maturity of the proposed loan, a general description of the facilities or other purposes to be financed, the name and address of the lender, and an attached term sheet summarizing the terms and conditions of the proposed loan;

(ii) A certification by an authorized official of the borrower that the borrower is in compliance with all requirements of its mortgage, loan agreement with RUS, and any other agreement with RUS that have not been exempted in writing by RUS;

(iii) The borrower's financial and statistical report, the data in which shall not be more than 60 days old when the complete application is received by RUS;

(iv) Draft copy of any new mortgage or mortgage amendment (supplement) required by RUS or the lender, unless RUS has notified the borrower that it wishes to prepare these documents itself;

(v) A copy of the loan agreement, loan note, bond or other financing instrument, unless RUS has notified the borrower that these documents need not be submitted. These documents will not be subject to RUS approval, but may be reviewed to determine whether they contain any provisions that would result in the security, including assurance of repayment, for loans made or guaranteed by RUS no longer being reasonably adequate;

(vi) The following certifications and reports required by law:

(A) The certification by the project architect for any buildings to be constructed, as required by 7 CFR 1717.850(i);

(B) A certification by an authorized official of the borrower that flood hazard insurance will be obtained for the full value of any buildings, or other facilities susceptible to damage if flooded, that will be located in a flood hazard area;

(C) Form AD–1047, Certification Regarding Debarment, Suspension, and Other Responsibility Matters—Primary Covered Transactions, as required by 7 CFR part 3017;

(D) A report by the borrower stating whether or not it is delinquent on any Federal debt, and if delinquent, the amount and age of the delinquency and the reasons therefor; and a certification, if not previously provided, that the borrower has been informed of the Government's collection options; and

(E) The written acknowledgement from a registered engineer or architect regarding compliance with seismic provisions of applicable model codes for any buildings to be constructed, as required by 7 CFR 1792.104. All other elements of an application listed in § 1717.855, § 1717.856, and § 1717.858(c) not listed in this paragraph (c) are exempted.

(3) Applications from distribution borrowers are submitted to the general field representative (GFR), while applications from power supply borrowers are submitted to the RUS Power Supply Division, or its successor, in Washington, DC. When an application is satisfactory to the GFR, it will be sent promptly to the Washington office. If Washington office staff determine that an application is incomplete, the borrower will be promptly notified in writing about the deficiencies. When the application is complete, and if the security, including assurance of repayment, of loans made or guaranteed by RUS will remain reasonably adequate after granting the lien accommodation or subordination, the borrower and the lender will be promptly notified in writing that the lien accommodation or subornation has been approved, subject to the conditions cited in paragraph (c)(1) of this section.

(d) *Rural development and other non-electric utility investments.* Although RUS recommends the use of separate subsidiaries as set forth in § 1717.858, if requested by a borrower that meets the 110 percent equity test and all other applicable requirements of this section, RUS will provide a lien subordination on the specific assets financed in the case of loans made directly to the borrower for rural development and other non-electric utility purposes, provided that the outstanding balance of all such loans lien subordinated under this paragraph (d), after taking into consideration the effect of the new loan, does not exceed 15 percent of the borrower's net worth and the security, including assurance of repayment, of loans made or guaranteed by RUS will remain reasonably adequate after granting the lien subordination. Investments lien subordinated under this paragraph shall be included among those investments subject to the 15 percent of total utility plant limitation set forth in 7 CFR 1717.654(b)(1), and granting of the lien subordination will not constitute

approval of the investment under 7 CFR part 1717, subpart N.

(e) *Requirements and controls not exempted.* All requirements and limitations imposed with respect to lien accommodations and subordinations by this subpart R that are not specifically exempted by this section are not exempted and shall continue to apply according to their terms.

[59 FR 3986, Jan. 28, 1994, as amended at 60 FR 3735, Jan. 19, 1995; 60 FR 67410, Dec. 29, 1995]

§§ 1717.861—1717.899 [Reserved]

Subpart S—Lien Accommodations for Supplemental Financing Required by 7 CFR 1710.110

SOURCE: 58 FR 53851, Oct. 19, 1993, unless otherwise noted.

§1717.900 Qualification requirements.

Applications for a lien accommodation for supplemental financing required by 7 CFR 1710.110 must meet the same requirements as an RUS insured loan. The justification and documentation materials submitted as part of the borrower's application for an insured loan also serve as the justification and documentation of the request for a lien accommodation for the required supplemental loan. Unless early approval under §1717.901 is requested by a borrower, these applications will be processed during the same time as RUS's review of the borrower's application for the concurrent insured loan.

§1717.901 Early approval.

(a) *Conditions.* If requested by a borrower in writing, RUS will review the application for a lien accommodation for required supplemental financing early in the process, before funding is available for the concurrent RUS insured loan, and approve the lien accommodation if the following conditions are met:

(1) The required supplemental loan meets the requirements for an insured loan, as set forth in 7 CFR part 1710, subparts A through G, and other RUS regulations pertaining to required supplemental loans;

(2) The borrower has demonstrated the ability to obtain the funds that would be needed to complete other portions of the project, if the portion to be constructed with private loan funds could not be used productively without completion of such other portions, in the event concurrent RUS insured loan funds are not forthcoming. Such evidence may include financial records demonstrating the availability of general funds, and/or a written commitment from the private lender to provide a loan for the remaining amount of financing required, with such commitment being conditioned upon the availability of a lien accommodation from RUS; and

(3) An authorized official of the borrower has requested early approval of the lien accommodation and explained the reasons therefor, and has certified that the funds are needed and will be drawn down before funds from the concurrent insured loan are expected to be available, assuming that the insured loan is approved.

(b) *Timeframe for RUS action.* (1) RUS will either approve or disapprove the lien accommodation within 90 days of receiving the borrower's request for early approval and the complete application for the concurrent RUS loan and required supplemental financing, in form and substance satisfactory to RUS, or notify the borrower in writing of the estimated date when a decision is expected. If an environmental assessment or an Environmental Impact Statement is required, additional time beyond the 90 days may be required to prepare these documents. RUS's approval of the lien accommodation will be conditioned upon execution and delivery by the borrower of a satisfactory security instrument, if required, and such additional information, documents, and opinions of counsel as RUS may require.

(2) If a mortgage or mortgage amendment is required, RUS will consult with the other mortgagees as to who will prepare the documents. Within 30 days of obtaining the documents satisfactory to RUS, including required execution counterparts, RUS will execute the documents and send them to the borrower, along with instructions pertaining to recording of the mortgage,

an opinion of borrower's counsel, and other matters. RUS will promptly notify the borrower upon receiving satisfactory evidence that the borrower has complied with said instructions.

(c) *Approval of concurrent insured loan.* Early approval of a lien accommodation for a required supplemental loan does not ensure that the concurrent RUS insured loan will be approved. The request for the concurrent insured loan will be reviewed when funds are available to make the loan. The borrower may be requested to update certain supporting information in the loan application if substantial time has elapsed since the lien accommodation or subordination was approved.

§ 1717.902 Other RUS requirements.

Supplemental loans required by 7 CFR 1710.110 are subject to the same post-loan requirements as insured RUS loans regarding accepted materials, construction standards, contracting and procurement procedures, standard forms of contracts, RUS approval of the advance of loan funds, and other matters.

§ 1717.903 Liability.

It is the intent of this subpart that any failure on the part of RUS to comply with any provisions of this subpart, including without limitation, those provisions setting forth specified timeframes for action by RUS on applications for lien accommodations or lien subordinations, shall not give rise to liability of any kind on the part of the Government or any employees of the Government including, without limitation, liability for damages, fees, expenses or costs incurred by or on behalf of a borrower, private lender or any other party.

§ 1717.904 Exemptions pursuant to section 306E of the RE Act.

(a) *General policy.* If a borrower's net worth to RUS debt ratio exceeds 110 percent, as determined by RUS, and the borrower is in compliance with all requirements of its mortgage, loan agreement with RUS, and any other agreement with RUS that have not been exempted in writing by RUS, RUS will expeditiously approve a lien accommodation for a concurrent supplemental loan if requested in writing by the borrower, provided that the security, including assurance of repayment, of loans made or guaranteed by RUS will remain reasonably adequate. RUS's approval will be conditioned upon execution and delivery by the borrower of a security instrument satisfactory to RUS, if required, and such additional information, documents, and opinions of counsel as RUS may require.

(b) *Determination of net worth to RUS debt ratio.* A borrower's ratio of net worth to RUS debt will be determined as set forth in § 1717.860(b).

(c) *Requirements and controls exempted.* The applicable requirements and controls exempted by 7 CFR 1710.7(c) are also exempted with respect to concurrent supplemental loans.

(d) *Requirements and controls not exempted.* All requirements and controls applicable to concurrent supplemental financing set forth in this subpart and other RUS regulations that are not specifically exempted by 7 CFR 1710.7(c) are not exempted and shall continue to apply according to their terms. These include, but are not limited to:

(1) The applicable requirements listed in 7 CFR 1710.7(d); and

(2) The requirements set forth in § 1717.901(a) when a borrower requests early approval of a lien accommodation.

(e) *Procedures.* If a borrower meets the requirements of this section, upon receipt of a complete application RUS will promptly notify the borrower and lender in writing that the lien accommodation has been approved subject to the conditions set forth in paragraph (a) of this section.

[59 FR 3987, Jan. 28, 1994]

§§1717.905—1717.949 [Reserved]

Subpart T [Reserved]

§§1717.950—1717.999 [Reserved]

Subpart U [Reserved]

§§1717.1000—1717.1049 [Reserved]

Subpart V [Reserved]

§§1717.1050—1717.1099 [Reserved]

Subpart W [Reserved]

§§1717.1100—1717.1149 [Reserved]

Subpart X [Reserved]

§§1717.1150—1717.1199 [Reserved]

Subpart Y—Settlement of Debt

SOURCE: 62 FR 50491, Sept. 26, 1997, unless otherwise noted.

§1717.1200 Purpose and scope.

(a) Section 331(b) of the Consolidated Farm and Rural Development Act (Con Act), as amended on April 4, 1996 by Public Law 104–127, 110 Stat. 888 (7 U.S.C. 1981), grants authority to the Secretary of Agriculture to compromise, adjust, reduce, or charge-off debts or claims arising from loans made or guaranteed under the Rural Electrification Act of 1936, as amended (RE Act). Section 331(b) of the Con Act also authorizes the Secretary of Agriculture to adjust, modify, subordinate, or release the terms of security instruments, leases, contracts, and agreements entered into or administered by the Rural Utilities Service (RUS). The Secretary, in 7 CFR 2.47, has delegated authority under section 331(b) of the Con Act to the Administrator of the RUS, with respect to loans made or guaranteed by RUS.

(b) This subpart sets forth the policy and standards of the Administrator of RUS with respect to the settlement of debts and claims arising from loans made or guaranteed to rural electric borrowers under the RE Act. Nothing in this subpart limits the Administrator's authority under section 12 of the RE Act.

§1717.1201 Definitions.

Terms used in this subpart that are not defined in this section have the meanings set forth in 7 CFR part 1710. In addition, for the purposes of this subpart:

Application for debt settlement means a written application containing all of the information required by §1717.1204(b)(2), in form and substance satisfactory to RUS.

Attorney General means the Attorney General of the United States of America.

Claim means any claim of the government arising from loans made or guaranteed under the RE Act to a rural electric borrower.

Con Act means the Consolidated Farm and Rural Development Act (7 U.S.C. 1921 *et seq.*).

Debt means outstanding debt of a rural electric borrower (including, but not necessarily limited to, principal, accrued interest, penalties, and the government's costs of debt collection) arising from loans made or guaranteed under the RE Act.

Enforced collection procedures means any procedures available to the Administrator for the collection of debt that are authorized by law, in equity, or under the borrower's loan documents or other agreements with RUS.

Loan documents means the mortgage (or other security instrument acceptable to RUS), the loan contract, and the promissory note entered into between the borrower and RUS.

RE Act means the Rural Electrification Act of 1936, as amended (7 U.S.C. 901–950b).

Restructure means to settle a debt or claim.

Settle means to reamortize, adjust, compromise, reduce, or charge-off a debt or claim.

§1717.1202 General policy.

(a) It is the policy of the Administrator that, wherever possible, all debt owed to the government, including but not limited to principal and interest, shall be collected in full in accordance with the terms of the borrower's loan documents.

(b) Nothing in this subpart by itself modifies, reduces, waives, or eliminates any obligation of a borrower

under its loan documents. Any such modifications regarding the debt owed by a borrower may be granted under the authority of the Administrator only by means of the explicit written approval of the Administrator in each case.

(c) The Administrator's authority to settle debts and claims will apply to cases where a borrower is unable to pay its debts and claims in accordance with their terms, as further defined in § 1717.1204(b)(1), and where settlement will maximize, on a present value basis, the recovery of debts and claims owed to the government.

(d) In structuring settlements and determining the capability of the borrower to repay debt and the amount of debt recovery that is possible, the Administrator will consider, among other factors, the RE Act, the National Energy Policy Act of 1992 (Pub. L. 102–486, 106 Stat. 2776), the policies and regulations of the Federal Energy Regulatory Commission, state legislative and regulatory actions, and other market and nonmarket forces as to their effects on competition in the electric utility industry and on rural electric systems in particular. Other factors the Administrator will consider are set forth in more detail in § 1717.1204.

§ 1717.1203 Relationship between RUS and Department of Justice.

(a) The Attorney General will be notified by the Administrator whenever the Administrator intends to use his or her authority under section 331(b)of the Con Act to settle a debt or claim.

(b) If an outstanding claim has been referred in writing to the Attorney General, the Administrator will not use his or her own authority to settle the claim without the approval of the Attorney General.

(c) If an application for additional debt relief is received from a borrower whose debt has been settled in the past under the authority of the Attorney General, the Administrator will promptly notify the Attorney General before proceeding to consider the application.

§ 1717.1204 Policies and conditions applicable to settlements.

(a) *General.* Settlement of debts and claims shall be subject to the policies, requirements, and conditions set forth in this section and in § 1717.1202.

(b) *Need for debt settlement.* (1) The Administrator will not settle any debt or claim unless the Administrator has determined that the borrower is unable to meet its financial obligations under its loan documents according to the terms of those documents, or that the borrower will not be able to meet said obligations sometime within the period of 24 months following the month the borrower submits its application for debt settlement to RUS, and, in either case, such default is likely to continue indefinitely. The determination of a borrower's ability to meet its financial obligations will be based on analyses and documentation by RUS of the borrower's historical, current, and projected costs, revenues, cash flows, assets, opportunities to reduce costs and/or increase revenues, and other factors that may be relevant on a case by case basis.

(2) In its application to RUS for debt settlement, the borrower must provide, in form and substance satisfactory to RUS, an in-depth analysis supporting the borrower's contention that it is unable or will not be able to meet its financial obligations as described in paragraph (b)(1) of this section. The analysis must include:

(i) An explanation and analysis of the causes of the borrower's inability to meet its financial obligations;

(ii) A thorough review and analysis of the opportunities available or potentially available to the borrower to reduce administrative overhead and other costs, improve efficiency and effectiveness, and expand markets and revenues, including but not limited to opportunities for sharing services, merging, and/or consolidating, raising rates when appropriate, and renegotiating supplier and service contracts. In the case of a power supply borrower, the study shall include such opportunities among the members of the borrower, unless the Administrator waives this requirement;

(iii) Documentation of the actions taken, in progress, or planned by the borrower (and its member systems, if applicable) to take advantage of the opportunities cited in paragraph (b)(2)(ii) of this section; and

(iv) Other analyses and documentation prescribed by RUS on a case by case basis.

(3) RUS may require that an independent consultant provide an analysis of the efficiency and effectiveness of the borrower's organization and operations, and those of its member systems in the case of a power supply borrower. The following conditions will apply:

(i) RUS will select the independent consultant taking into account, among other matters, the consultant's experience and expertise in matters relating to electric utility operations, finance, and restructuring;

(ii) The contract with the consultant shall be to provide services to RUS on such terms and conditions as RUS deems appropriate. The consultant's scope of work may include, but shall not be limited to, an analysis of the following:

(A) How to maximize the value of the government's collateral, such as through mergers, consolidations, or sales of all or part of the collateral;

(B) The viability of the borrower's system, taking into account such matters as system size, service territory and markets, asset base, physical condition of the plant, operating efficiency, competitive pressures, industry trends, and opportunities to expand markets and improve efficiency and effectiveness;

(C) The feasibility and the potential benefits and risks to the borrower and the government of corporate restructuring, including aggregation and disaggregation;

(D) In the case of a power supply borrower, the retail rate mark-up by member systems and the potential benefits to be achieved by member restructuring through mergers, consolidations, shared services, and other alliances;

(E) The quality of the borrower's management, management advisors, consultants, and staff;

(F) Opportunities for reducing overhead and other costs, for expanding markets and revenues, and for improving the borrower's existing and prospective contractual arrangements for the purchase and sale of power, procurement of supplies and services, and the operation of plant and facilities;

(G) Opportunities to achieve efficiency gains and increased revenues based on comparisons with benchmark electric utilities; and

(H) The accuracy and completeness of the borrower's analysis provided under paragraph (b)(2) of this section;

(iii) RUS and, as appropriate, other creditors, will determine the extent to which the borrower and third parties (including the members of a power supply borrower) will be required to participate in funding the costs of the independent consultant;

(iv) The borrower will be required to make available to the consultant all corporate documents, files, and records, and to provide the consultant with access to key employees. The borrower will also normally be required to provide the consultant with office space convenient to the borrower's operations and records; and

(v) All analyses, studies, opinions, memoranda, and other documents and information produced by the independent consultant shall be provided to RUS on a confidential basis for consideration in evaluating the borrower's application for debt settlement. Such documents and information may be made available to the borrower and other appropriate parties if authorized in writing by RUS.

(4) The borrower may be required to employ a temporary or permanent manager acceptable to the Administrator, to manage the borrower's operations to ensure that all actions are taken to avoid or minimize the need for debt settlement. The employment could be on a temporary basis to manage the system during the time the debt settlement is being considered, and possibly for some time after any debt settlement, or it could be on a permanent basis.

(5) The borrower must submit, at a time determined by RUS, a resolution of its board of directors requesting debt settlement and stating that the borrower is either currently unable to meet its financial obligations to the

government or will not be able to meet said obligations sometime within the next 24 months, and that, in either case, the default is likely to continue indefinitely.

(c) *Debt settlement measures.* (1) If the Administrator determines that debt settlement is appropriate, the debt settlement measures the Administrator will consider under this subpart with respect to direct, insured, or guaranteed loans include, but are not limited to, the following:

(i) Reamortization of debt;

(ii) Extension of debt maturity, provided that the maturity of the borrower's outstanding debt after settlement shall not extend more than 10 years beyond the latest maturity date prior to settlement;

(iii) Reduction of the interest rate charged on the borrower's debt, provided that the interest rate on any portion of the restructured debt shall not be reduced to less than 5 percent, unless the Administrator determines that reducing the rate below 5 percent would maximize debt recovery by the government;

(iv) Forgiveness of interest accrued, penalties, and costs incurred by the government to collect the debt; and

(v) With the concurrence of the Under Secretary for Rural Development, forgiveness of loan principal.

(2) In the event that RUS has, under section 306 of the RE Act, guaranteed loans made by the Federal Financing Bank or other third parties, the Administrator may restructure the borrower's obligations by: acquiring and restructuring the guaranteed loan; restructuring the loan guarantee obligation; restructuring the borrower's reimbursement obligations; or by such means as the Administrator deems appropriate, subject to such consents and approvals, if any, that may be required by the third party lender.

(d) *Borrower's obligations to other creditors.* The Administrator will not grant relief on debt owed to the government unless similar relief, on a pro rata basis, is granted with respect to other secured obligations of the borrower, or the other secured creditors provide other benefits or value to the debt restructuring. Unsecured creditors will also be expected to contribute to the restructuring. If it is not possible to obtain the expected contributions from other creditors, the Administrator may proceed to settle a borrower's debt if that will maximize recovery by the government and will not result in material benefits accruing to other creditors at the expense of the government.

(e) *Competitive bids for system assets.* If requested by RUS, the borrower or the independent consultant provided for in paragraph (b)(3) of this section shall solicit competitive bids from potential buyers of the borrower's system or parts thereof. The bidding process must be conducted in consultation with RUS and use standards and procedures acceptable to RUS. The Administrator may use the competitive bids received as a basis for requiring the sale of all or part of the borrower's system as a condition of settlement of the borrower's debt. The Administrator may also consider the bids in evaluating alternative settlement measures.

(f) *Valuation of system.* (1) The Administrator will consider the value of the borrower's system, including, in the case of a power supply borrower, the wholesale power contracts between the borrower and its member systems. The valuation of the wholesale power contracts shall take into account, among other matters, the rights of the government and/or third parties, to assume the rights and obligations of the borrower under such contracts, to charge reasonable rates for service provided under the contracts, and to otherwise enforce the contracts in accordance with their terms. In no case will the Administrator settle a debt or claim for less than the value (after considering the government's collection costs) of the borrower's system and other collateral securing the debt or claim.

(2) RUS may use such methods, analyses, and assessments as the Administrator deems appropriate to determine the value of the borrower's system.

(g) *Rates.* The Administrator will consider the rates charged for electric service by the borrower and, in the case of a power supply borrower, by its members, taking into account, among other factors, the practices of the Federal Energy Regulatory Commission (FERC), as adapted to the cooperative

structure of borrowers, and, where applicable, FERC treatment of any investments by co-owners in projects jointly owned by the borrower.

(h) *Collection action*. The Administrator will consider whether a settlement is favorable to the government in comparison with the amount that can be recovered by enforced collection procedures.

(i) *Regulatory approvals.* Before the Administrator will approve a settlement, the borrower must provide satisfactory evidence that it has obtained all approvals required of regulatory bodies that the Administrator determines are needed to implement rates or other provisions of the settlement, or that are needed in any other way for the borrower to fulfill its obligations under the settlement.

(j) *Conditions regarding management and operations.* As a condition of debt settlement, the borrower, and in the case of a power supply borrower, its members, will be required to implement those changes in structure, management, operations, and performance deemed necessary by the Administrator. Those changes may include, but are not limited to, the following:

(1) The borrower may be required to undertake a corporate restructuring and/or sell a portion of its plant, facilities, or other assets

(2) The borrower may be required to replace senior management and/or hire outside experts acceptable to the Administrator. Such changes may include a commitment by the borrower's board of directors to restructure and/or obtain new membership to improve board oversight and leadership;

(3) The borrower may be required to agree to:

(i) Controls by RUS on the general funds of the borrower, as well as on any investments, loans or guarantees by the borrower, notwithstanding any limitations on RUS' control rights in the borrower's loan documents or RUS regulations; and

(ii) Requirements deemed necessary by RUS to perfect and protect its lien on cash deposits, securities, equipment, vehicles, and other items of real or non-real property; and

(4) In the case of a power supply borrower, the borrower may be required to obtain credit support from its member systems, as well as pledges and action plans by the members to change their operations, management, and organizational structure (e.g., shared services, mergers, or consolidations) in order to reduce operating costs, improve efficiency, and/or expand markets and revenues.

(k) *Conveyance of assets.* As a condition of a settlement, a borrower may be required to convey some or all its assets to the government.

(l) *Additional conditions.* The borrower will be required to warrant and agree that no bonuses or similar extraordinary compensation has been or will be provided, for reasons related to the settlement of government debt, to any officer or employee of the borrower or to other persons or entities identified by RUS. The Administrator may impose such other terms and conditions of debt settlement as the Administrator determines to be in the government's interests.

(m) *Certification of accuracy*. Before the Administrator will approve a debt settlement, the manager or other appropriate official of the borrower must certify that all information provided to the government by the borrower or by any agent of the borrower, in connection with the debt settlement, is true, correct, and complete in all material respects.

§1717.1205 Waiver of existing conditions on borrowers.

Pursuant to section 331(b) of the Con Act, the Administrator, at his or her sole discretion, may waive or otherwise reduce conditions and requirements imposed on a borrower by its loan documents if the Administrator determines that such action will contribute to enhancement of the government's recovery of debt. Such waivers or reductions in conditions and requirements under this section shall not include the exercise of any of the debt settlement measures set forth in §1717.1204(c), which are subject to all of the requirements of said §1717.1204.

§1717.1206 Loans subsequent to settlement.

In considering any future loan requests from a borrower whose debt has

been settled in whole or in part (including the surviving entity of merged or consolidated borrowers, where at least one of said borrowers had its debts settled), it will be presumed that credit support for the full amount of the requested loan will be required. Such support may be in a number of forms, provided that they are acceptable to the Administrator on a case by case basis. They may include, but need not be limited to, equity infusions and guarantees of debt repayment, either from the applicant's members (in the case of a power supply borrower), or from a third party.

§ 1717.1207 RUS obligations under loan guarantees.

Nothing in this subpart affects the obligations of RUS under loan guarantee commitments it has made to the Federal Financing Bank or other lenders.

§ 1717.1208 Government's rights under loan documents.

Nothing in this subpart limits, modifies, or otherwise affects the rights of the government under loan documents executed with borrowers, or under law or equity.

PART 1718—LOAN SECURITY DOCUMENTS FOR ELECTRIC BORROWERS

Subpart A—General

Sec.
1718.1—1718.49 [Reserved]

Subpart B—Mortgage for Distribution Borrowers

1718.50 Definitions.
1718.51 Policy.
1718.52 Existing mortgages.
1718.53 Rights of other mortgagees.
1718.54 Availability of model mortgage.

APPENDIX A TO SUBPART B TO PART 1718—MODEL FORM OF MORTGAGE FOR ELECTRIC DISTRIBUTION BORROWERS

Subpart C—Loan Contracts With Distribution Borrowers

1718.100 General.
1718.101 Applicability.
1718.102 Definitions.
1718.103 Loan contract provisions.
1718.104 Availability of model loan contract.

APPENDIX A TO SUBPART C TO PART 1718—MODEL FORM OF LOAN CONTRACT FOR ELECTRIC DISTRIBUTION BORROWERS

AUTHORITY: 7 U.S.C. 901–950b; Pub. L. 103–354, 108 Stat. 3178 (7 U.S.C. 6941 *et seq.*).

Subpart A—General

§§ 1718.1—1718.49 [Reserved]

Subpart B—Mortgage for Distribution Borrowers

SOURCE: 60 FR 36888, July 18, 1995, unless otherwise noted.

§ 1718.50 Definitions.

Unless otherwise indicated, terms used in this subpart are defined as set forth in 7 CFR 1710.2.

§ 1718.51 Policy.

(a) Adequate loan security must be provided for loans made or guaranteed by RUS. The loans are required to be secured by a first mortgage lien on most of the borrower's assets substantially in the form set forth in appendix A of this subpart. At the discretion of RUS, this model form of mortgage may be adapted to satisfy different legal requirements among the states and individual differences in lending circumstances, provided that such adaptations are consistent with the policies set forth in this subpart.

(b) Some borrowers, such as certain public power districts, may not be able to provide security in the form of a first mortgage lien on their assets. In these cases RUS will consider accepting other forms of security, such as resolutions and pledges of revenues.

(c) RUS may require supplemental and amending mortgages to protect its security, or in connection with additional loans.

(d) RUS may also require such other security instruments (such as loan contracts, security agreements, financing statements, guarantees, and pledges) as it deems appropriate.

(e) All distribution borrowers that receive a loan or loan guarantee from RUS on or after August 17, 1995 will be required to enter into a mortgage with RUS that meets the requirements of this subpart. The concurrence of any

other lenders secured under the borrower's existing mortgage may be required before the borrower can enter into a new mortgage.

§ 1718.52 Existing mortgages.

Nothing contained in this subpart amends, invalidates, terminates or rescinds any existing mortgage entered into between the borrower and RUS and any other mortgagees.

§ 1718.53 Rights of other mortgagees.

Nothing contained in this subpart is intended to alter or affect any other mortgagee's rights under an existing mortgage.

§ 1718.54 Availability of model mortgage.

Single copies of the model mortgage (RUS Informational Publication 1718 B) are available from the Administrative Services Division, Rural Utilities Service, United States Department of Agriculture, Washington, DC 20250–1500. This document may be reproduced.

APPENDIX A TO SUBPART B TO PART 1718—MODEL FORM OF MORTGAGE FOR ELECTRIC DISTRIBUTION BORROWERS

RESTATED MORTGAGE AND SECURITY AGREEMENT Made By And Between

_____

Mortgagor

and UNITED STATES OF AMERICA and

_____

MORTGAGEE

Dated as of _____

THIS INSTRUMENT GRANTS A SECURITY INTEREST BY A TRANSMITTING UTILITY

THIS INSTRUMENT CONTAINS FUTURE ADVANCE PROVISIONS

THIS INSTRUMENT CONTAINS AFTER-ACQUIRED PROPERTY PROVISIONS

TABLE OF CONTENTS

GRANTING CLAUSES

FIRST
SECOND
THIRD
FOURTH
EXCEPTED PROPERTY

HABENDUM

ARTICLE I—DEFINITIONS & OTHER PROVISIONS OF GENERAL APPLICATION

SECTION 1.01 Definitions
SECTION 1.02 General Rules of Construction
SECTION 1.03 Special Rules of Construction if RUS is a Mortgagee
SECTION 1.04 Governing Law
SECTION 1.05 Notices

ARTICLE II

ADDITIONAL NOTES

SECTION 2.01 Additional Notes
SECTION 2.02 Refunding or Refinancing Notes
SECTION 2.03 Other Additional Notes
SECTION 2.04 Additional Lenders Entitled to the Benefits of This Mortgage
SECTION 2.05 Form of Supplemental Mortgage

ARTICLE III—PARTICULAR COVENANTS OF THE MORTGAGOR

SECTION 3.01 Payment of Debt Service on Notes
SECTION 3.02 Warranty of Title
SECTION 3.03 After-Acquired Property; Further Assurances: Recording
SECTION 3.04 Environmental Requirements and Indemnity
SECTION 3.05 Payment of Taxes
SECTION 3.06 Authority to Execute and Deliver Notes, Loan Agreements and Mortgage; All Action Taken; Enforceable Obligations
SECTION 3.07 Restrictions on Further Encumbrances on Property
SECTION 3.08 Restrictions on Additional Permitted Debt
SECTION 3.09 Preservation of Corporate Existence and Franchises
SECTION 3.10 Limitations on Consolidations and Mergers
SECTION 3.11 Limitations on Transfers of Property
SECTION 3.12 Maintenance of Mortgaged Property
SECTION 3.13 Insurance; Restoration of Damaged Mortgaged Property
SECTION 3.14 Mortgagee Right to Expend Money to Protect Mortgaged Property
SECTION 3.15 Time Extensions for Payment of Notes
SECTION 3.16 Application of Proceeds from Condemnation
SECTION 3.17 Compliance with Loan Agreements; Notice of Amendments to and Defaults under Loan Agreements
SECTION 3.18 Rights of Way, etc., Necessary in Business
SECTION 3.19 Limitations on Providing Free Electric Services
SECTION 3.20 Keeping Books; Inspection by

Mortgagee

ARTICLE IV—EVENTS OF DEFAULT AND REMEDIES

SECTION 4.01 Events of Default
SECTION 4.02 Acceleration of Maturity; Rescission and Annulment
SECTION 4.03 Remedies of Mortgagees
SECTION 4.04 Application of Proceeds from Remedial Actions
SECTION 4.05 Remedies Cumulative; No Election
SECTION 4.06 Waiver of Appraisement Rights, Marshaling of Assets Not Required
SECTION 4.07 Notice of Default

ARTICLE V—POSSESSION UNTIL DEFAULT—DEFEASANCE CLAUSE

SECTION 5.01 Possession Until Default
SECTION 5.02 Defeasance
SECTION 5.03 Special Defeasance

ARTICLE VI—MISCELLANEOUS

SECTION 6.01 Property Deemed Real Property
SECTION 6.02 Mortgage to Bind and Benefit Successors and Assigns
SECTION 6.03 Headings
SECTION 6.04 Severability Clause
SECTION 6.05 Mortgage Deemed Security Agreement
SECTION 6.06 Indemnification by Mortgagor of Mortgagees
Schedule A
Schedule B
Schedule C
Exhibit A—Manager's Certificate
Exhibit B—Form of Supplemental Mortgage
Supplemental Mortgage Schedule A—Maximum Debt Limit and Other Information
Supplemental Mortgage Schedule B—Property Schedule
Supplemental Mortgage Schedule C—Excepted Property

RESTATED MORTGAGE AND SECURITY AGREEMENT, dated as of _____ 19___, (hereinafter sometimes called this ''Mortgage'') is made by and between

---

(hereinafter called the ''Mortgagor''), a corporation existing under the laws of the State of _____, and the UNITED STATES OF AMERICA acting by and through the Administrator of the Rural Utilities Service (hereinafter called the ''Government''), _____ { Supplemental Lender}, (hereinafter called ''_____'') a _____ existing under the laws of _____, and is intended to confer rights and benefits on both the Government and _____ as well as any and all other lenders pursuant to Article II of this Mortgage that enter into a supplemental mortgage in accordance with Section [2.04] of Article II hereof (the Government and any such other lenders being herein sometimes collectively referred to as the ''Mortgagees'').

RECITALS

WHEREAS, the Mortgagor, the Government and _____ are parties to that certain _____ Mortgage and Security Agreement dated as of _____, 19___, as supplemented, amended or restated (the ''Original Mortgage'' identified in Schedule ''A'' of this Mortgage) originally entered into between the Mortgagor, the Government acting by and through the Administrator of the Rural Electrification Administration, the predecessor of RUS, and _____;

WHEREAS, the Mortgagor deems it necessary to borrow money for its corporate purposes and to issue its promissory notes and other debt obligations therefor from time to time in one or more series, and to mortgage and pledge its property hereinafter described or mentioned to secure the payment of the same;

WHEREAS, the Mortgagor desires to enter into this Mortgage pursuant to which all secured debt of the Mortgagor hereunder shall be secured on parity;

WHEREAS, this Mortgage restates and consolidates the Original Mortgage while preserving the priority of the Lien under the Original Mortgage securing the payment of Mortgagor's outstanding obligations secured under the Original Mortgage, which indebtedness is described more particularly by listing the Original Notes in Schedule ''A'' hereto; and

WHEREAS, all acts necessary to make this Mortgage a valid and binding legal instrument for the security of such notes and obligations, subject to the terms of this Mortgage, have been in all respects duly authorized;

NOW, THEREFORE, THIS MORTGAGE WITNESSETH: That to secure the payment of the principal of (and premium, if any) and interest on the Original Notes and all Notes issued hereunder according to their tenor and effect, and the performance of all provisions therein and herein contained, and in consideration of the covenants herein contained and the purchase or guarantee of Notes by the guarantors or holders thereof, the Mortgagor has mortgaged, pledged and granted a continuing security interest in, and by these presents does hereby grant, bargain, sell, alienate, remise, release, convey, assign, transfer, hypothecate, pledge, set over and confirm, pledge, and grant a continuing security interest and lien in for the purposes hereinafter expressed [other language may be required under various state laws], unto the Mortgagees all property, rights, privileges and franchises of the Mortgagor of every kind and description, real, personal or mixed, tangible and intangible, of the kind or nature specifically mentioned herein OR ANY OTHER KIND OR NATURE,

except any Excepted Property, now owned or hereafter acquired by the Mortgagor (by purchase, consolidation, merger, donation, construction, erection or in any other way) wherever located, including (without limitation) all and singular the following:

GRANTING CLAUSE FIRST

A. all of those fee and leasehold interests in real property set forth in Schedule ''B'' hereto, subject in each case to those matters set forth in such Schedule;

B. all of the Mortgagor's interest in fixtures, easements, permits, licenses and rights-of-way comprising real property, and all other interests in real property, comprising any portion of the Utility System (as herein defined) located in the Counties listed in Schedule ''B'' hereto;

C. all right, title and interest of the Mortgagor in and to those contracts of the Mortgagor (i) relating to the ownership, operation or maintenance of any generation, transmission or distribution facility owned, whether solely or jointly, by the Mortgagor, (ii) for the purchase of electric power and energy by the Mortgagor and having an original term in excess of 3 years, (iii) for the sale of electric power and energy by the Mortgagor and having an original term in excess of 3 years, and (iv) for the transmission of electric power and energy by or on behalf of the Mortgagor and having an original term in excess of 3 years, including in respect of any of the foregoing, any amendments, supplements and replacements thereto;

D. all the property, rights, privileges, allowances and franchises particularly described in the annexed Schedule ''B'' are hereby made a part of, and deemed to be described in, this Granting Clause as fully as if set forth in this Granting Clause at length; and

ALSO ALL OTHER PROPERTY, real estate, lands, easements, servitudes, licenses, permits, allowances, consents, franchises, privileges, rights of way and other rights in or relating to real estate or the occupancy of the same; all power sites, storage rights, water rights, water locations, water appropriations, ditches, flumes, reservoirs, reservoir sites, canals, raceways, waterways, dams, dam sites, aqueducts, and all other rights or means for appropriating, conveying, storing and supplying water; all rights of way and roads; all plants for the generation of electric and other forms of energy (whether now known or hereafter developed) by steam, water, sunlight, chemical processes and/or (without limitation) all other sources of power (whether now known or hereafter developed); all power houses, gas plants, street lighting systems, standards and other equipment incidental thereto; all telephone, radio, television and other communications, image and data transmission systems, air conditioning systems and equipment incidental thereto, water wheels, waterworks, water systems, steam and hot water plants, substations, lines, service and supply systems, bridges, culverts, tracks, ice or refrigeration plants and equipment, offices, buildings and other structures and the equipment thereto all machinery, engines, boilers, dynamos, turbines, electric, gas and other machines, prime movers, regulators, meters, transformers, generators (including, but not limited to, engine-driven generators and turbogenerator units), motors, electrical, gas and mechanical appliances, conduits, cables, water, steam, gas or other pipes, gas mains and pipes, service pipes, fittings, valves and connections, pole and transmission lines, towers, overhead conductors and devices, underground conduits, underground conductors and devices, wires, cables, tools, implements, apparatus, storage battery equipment, and all other fixtures and personalty; all municipal and other franchises, consents, certificates or permits; all emissions allowances; all lines for the transmission and distribution of electric current and other forms of energy, gas, steam, water or communications, images and data for any purpose including towers, poles, wires, cables, pipes, conduits, ducts and all apparatus for use in connection therewith, and (except as hereinbefore or hereinafter expressly excepted) all the right, title and interest of the Mortgagor in and to all other property of any kind or nature appertaining to and/or used and/or occupied and/or employed in connection with any property hereinbefore described, but in all circumstances excluding Excepted Property;

GRANTING CLAUSE SECOND

All other property, real, personal or mixed, of whatever kind and description and wheresoever situated, including without limitation goods, accounts, money held in a trust account pursuant hereto or to a Loan Agreement, and general intangibles now owned or which may be hereafter acquired by the Mortgagor, but excluding Excepted Property, now owned or which may be hereafter acquired by the Mortgagor, it being the intention hereof that all property, rights, privileges, allowances and franchisees now owned by the Mortgagor or acquired by the Mortgagor after the date hereof (other than Excepted Property) shall be as fully embraced within and subjected to the lien hereof as if such property were specifically described herein.

GRANTING CLAUSE THIRD

Also any Excepted Property that may, from time to time hereafter, by delivery or by writing of any kind, be subjected to the lien hereof by the Mortgagor or by anyone in its behalf; and any Mortgagee is hereby authorized to receive the same at any time as

additional security hereunder for the benefit of all the Mortgagees. Such subjection to the lien hereof of any Excepted Property as additional security may be made subject to any reservations, limitations or conditions which shall be set forth in a written instrument executed by the Mortgagor or the person so acting in its behalf or by such Mortgagee respecting the use and disposition of such property or the proceeds thereof.

GRANTING CLAUSE FOURTH

Together with (subject to the rights of the Mortgagor set forth on Section [5.01]) all and singular the tenements, hereditaments and appurtenances belonging or in anywise appertaining to the aforesaid property or any part thereof, with the reversion and reversions, remainder and remainders and all the tolls, earnings, rents, issues, profits, revenues and other income, products and proceeds of the property subjected or required to be subjected to the lien of this Mortgage, and all other property of any nature appertaining to any of the plants, systems, business or operations of the Mortgagor, whether or not affixed to the realty, used in the operation of any of the premises or plants or the System, or otherwise, which are now owned or acquired by the Mortgagor, and all the estate, right, title and interest of every nature whatsoever, at law as well as in equity, of the Mortgagor in and to the same and every part thereof (other than Excepted Property with respect to any of the foregoing).

EXCEPTED PROPERTY

There is, however, expressly excepted and excluded from the lien and operation of this Mortgage the following described property of the Mortgagor, now owned or hereafter acquired (herein sometimes referred to as ''Excepted Property''):

A. all shares of stock, securities or other interests of the Mortgagor in the National Rural Utilities Cooperative Finance Corporation, the National Bank for Cooperatives and the St. Paul Bank for Cooperatives other than any stock, securities or other interests that are specifically described in Subclause D of Granting Clause First as being subjected to the lien hereof;

B. all rolling stock (except mobile substations), automobiles, buses, trucks, truck cranes, tractors, trailers and similar vehicles and movable equipment, and all tools, accessories and supplies used in connection with any of the foregoing;

C. all vessels, boats, ships, barges and other marine equipment, all airplanes, airplane engines and other flight equipment, and all tools, accessories and supplies used in connection with any of the foregoing;

D. all office furniture, equipment and supplies that is not data processing, accounting or other computer equipment or software;

E. all leasehold interests for office purposes;

F. all leasehold interests of the Mortgagor under leases for an original term (including any period for which the Mortgagor shall have a right of renewal) of less than five (5) years;

G. all timber and crops (both growing and harvested) and all coal, ore, gas, oil and other minerals (both in place or severed);

H. the last day of the term of each leasehold estate (oral or written) and any agreement therefor, now or hereafter enjoyed by the Mortgagor and whether falling within a general or specific description of property herein: PROVIDED, HOWEVER, that the Mortgagor covenants and agrees that it will hold each such last day in trust for the use and benefit of all of the Mortgagees and Noteholders and that it will dispose of each such last day from time to time in accordance with such written order as the Mortgagee in its discretion may give;

I. all permits, licenses, franchises, contracts, agreements, contract rights and other rights not specifically subjected or required to be subjected to the lien hereof by the express provisions of this Mortgage, whether now owned or hereafter acquired by the Mortgagor, which by their terms or by reason of applicable law would become void or voidable if mortgaged or pledged hereunder by the Mortgagor, or which cannot be granted, conveyed, mortgaged, transferred or assigned by this Mortgage without the consent of other parties whose consent has been withheld, or without subjecting any Mortgagee to a liability not otherwise contemplated by the provisions of this Mortgage, or which otherwise may not be, hereby lawfully and effectively granted, conveyed, mortgaged, transferred and assigned by the Mortgagor; and

J. the property identified in Schedule ''C'' hereto.

PROVIDED, HOWEVER, that (i) if, upon the occurrence of an Event of Default, any Mortgagee, or any receiver appointed pursuant to statutory provision or order of court, shall have entered into possession of all or substantially all of the Mortgaged Property, all the Excepted Property described or referred to in the foregoing Subdivisions A through H, inclusive, then owned or thereafter acquired by the Mortgagor shall immediately, and, in the case of any Excepted Property described or referred to in Subdivisions I through J, inclusive, upon demand of any Mortgagee or such receiver, become subject to the lien hereof to the extent permitted by law, and any Mortgagee or such receiver may, to the extent permitted by law, at the same time likewise take possession thereof, and (ii) whenever all Events of Default shall have been cured and the possession of all or substantially all of the Mortgaged Property shall have been restored to

the Mortgagor, such Excepted Property shall again be excepted and excluded from the lien hereof to the extent and otherwise as hereinabove set forth.

However, pursuant to Granting Clause Third, the Mortgagor may subject to the lien of this Mortgage any Excepted Property, whereupon the same shall cease to be Excepted Property.

HABENDUM

TO HAVE AND TO HOLD all said property, rights, privileges and franchises of every kind and description, real, personal or mixed, hereby and hereafter (by supplemental mortgage or otherwise) granted, bargained, sold, aliened, remised, released, conveyed, assigned, transferred, mortgaged, encumbered, hypothecated, pledged, setover, confirmed, or subjected to a continuing security interest and lien as aforesaid, together with all the appurtenances thereto appertaining (said properties, rights, privileges and franchises, including any cash and securities hereafter deposited with any Mortgagee ((other than any such cash, if any, which is specifically stated herein not to be deemed part of the Mortgaged Property)), being herein collectively called the ''Mortgaged Property'') unto the Mortgagees and the respective assigns of the Mortgagees forever, to secure equally and ratably the payment of the principal of (and premium, if any) and interest on the Notes, according to their terms, without preference, priority or distinction as to interest or principal (except as otherwise specifically provided herein) or as to lien or otherwise of any Note over any other Note by reason of the priority in time of the execution, delivery or maturity thereof or of the assignment or negotiation thereof, or otherwise, and to secure the due performance of all of the covenants, agreements and provisions herein and in the Loan Agreements contained, and for the uses and purposes and upon the terms, conditions, provisos and agreements hereinafter expressed and declared.

SUBJECT, HOWEVER, to Permitted Encumbrances (as defined in Section 1.01).

ARTICLE I

DEFINITIONS . OTHER PROVISIONS OF GENERAL APPLICATION

Section 1.01. *Definitions.* In addition to the terms defined elsewhere in this Mortgage, the terms defined in this Article I shall have the meanings specified herein and under the UCC, unless the context clearly requires otherwise. The terms defined herein include the plural as well as the singular and the singular as well as the plural.

Accounting Requirements shall mean the requirements of any system of accounts prescribed by RUS so long as the Government is the holder, insurer or guarantor of any Notes, or, in the absence thereof, the requirements of generally accepted accounting principles applicable to businesses similar to that of the Mortgagor.

Additional Notes shall mean any Notes issued by the Mortgagor to the Government or any other lender pursuant to Article II of this Mortgage including any refunding, renewal, or substitute Notes which may from time to time be executed and delivered by the Mortgagor pursuant to the terms of Article II.

Board shall mean either the Board of Directors or the Board of Trustees, as the case may be, of the Mortgagor.

Business Day shall mean any day that the Government is open for business.

Debt Service Coverage Ratio (''DSC'') shall mean the ratio determined as follows: for each calendar year add (i) Patronage Capital or Margins of the Mortgagor, (ii) Interest Expense on Total Long Term Debt of the Mortgagor (as computed in accordance with the principles set forth in the definition of TIER) and (iii) Depreciation and Amortization Expense of the Mortgagor, and divide the total so obtained by an amount equal to the sum of all payments of principal and interest required to be made on account of Total Long-Term Debt during such calendar year increasing said sum by any addition to interest expense on account of Restricted Rentals as computed with respect to the Times Interest Earned Ratio herein.

Depreciation and Amortization Expense shall mean an amount constituting the depreciation and amortization of the Mortgagor as computed pursuant to Accounting Requirements.

Electric System shall mean, and shall be broadly construed to encompass and include, all of the Mortgagor's interests in all electric production, transmission, distribution, conservation, load management, general plant and other related facilities, equipment or property and in any mine, well, pipeline, plant, structure or other facility for the development, production, manufacture, storage, fabrication or processing of fossil, nuclear or other fuel of any kind or in any facility or rights with respect to the supply of water, in each case for use, in whole or in major part, in any of the Mortgagor's generating plants, now existing or hereafter acquired by lease, contract, purchase or otherwise or constructed by the Mortgagor, including any interest or participation of the Mortgagor in any such facilities or any rights to the output or capacity thereof, together with all additions, betterments, extensions and improvements to such Electric System or any part thereof hereafter made and together with all lands, easements and rights-of-way of the Mortgagor and all other works, property or structures of the Mortgagor and contract rights and other tangible and intangible assets of the Mortgagor used

or useful in connection with or related to such Electric System, including without limitation a contract right or other contractual arrangement referred to in Granting Clause First, Subclause [(C)] but excluding any excepted property.

Environmental Law and *Environmental Laws* shall mean all federal, state, and local laws, regulations, and requirements related to protection of human health or the environment, including but not limited to the Comprehensive Environmental Response, Compensation and Liability Act of 1980 (42 U.S.C. 9601 *et seq.*), the Resource Conservation and Recovery Act (42 U.S.C. 6901 *et seq.*), the Clean Water Act (33 U.S.C. 1251 *et seq.*) and the Clean Air Act (42 U.S.C. 7401 *et seq.*), and any amendments and implementing regulations of such acts.

Equity shall mean the total margins and equities and margins computed pursuant to Accounting Requirements, but excluding any Regulatory Created Assets.

Event of Default shall have the meaning specified in Section [4.01] hereof.

Excepted Property shall have the meaning stated in the Granting Clauses.

Government shall mean the United States of America acting by and through the Administrator of RUS and shall include its successors and assigns.

Government Notes shall mean the Original Notes, and any Additional Notes, issued by the Mortgagor to the Government, or guaranteed or insured as to payment by the Government.

Independent shall mean when used with respect to any specified person or entity means such a person or entity who (1) is in fact independent, (2) does not have any direct financial interest or any material indirect financial interest in the Mortgagor or in any affiliate of the Mortgagor and (3) is not connected with the Mortgagor as an officer, employee, promoter, underwriter, trustee, partner, director or person performing similar functions.

Interest Expense shall mean an amount constituting the interest expense of the Mortgagor as computed pursuant to Accounting Requirements.

Lien shall mean any statutory or common law consensual or non-consensual mortgage, pledge, security interest, encumbrance, lien, right of set off, claim or charge of any kind, including, without limitation, any conditional sale or other title retention transaction, any lease transaction in the nature thereof and any secured transaction under the UCC.

Loan Agreement shall mean any agreement executed by and between the Mortgagor and the Government or any other lender in connection with the execution and delivery of any Notes secured hereby.

Long-Term Debt shall mean any amount included in Total Long-Term Debt pursuant to Accounting Requirements.

Long-Term Lease shall mean a lease having an unexpired term (taking into account terms of renewal at the option of the lessor, whether or not such lease has previously been renewed) of more than 12 months.

Margins shall mean the sum of amounts recorded as operating margins and non-operating margins as computed in accordance with Accounting Requirements.

Maximum Debt Limit, if any, shall mean the amount more particularly described in Schedule ''A'' hereof.

Mortgage shall mean this Restated Mortgage and Security Agreement, including any amendments or supplements thereto from time to time.

Mortgaged Property shall have the meaning specified as stated in the Habendum to the Granting Clauses.

MORTGAGEE or MORTGAGEES shall mean the Government, _____ {the supplemental lender}, _____ their successors and assigns as well as any and all other lenders pursuant to Article II of this Mortgage that enter into a supplemental mortgage in accordance with Section [2.04] of Article II hereof, their successors and assigns.

Net Utility Plant shall mean the amount constituting the total utility plant of the Mortgagor less depreciation computed in accordance with Accounting Requirements.

Note or Notes shall mean one or more of the Government Notes, and any other Notes which may, from time to time, be secured under this Mortgage.

Noteholder or Noteholders shall mean one or more of the holders of Notes secured by this Mortgage; PROVIDED, however, that in the case of any Notes that have been guaranteed or insured as to payment by RUS, as to such Notes Noteholder or Noteholders shall mean RUS, exclusively, regardless of whether such notes are in the possession of RUS.

Original Mortgage means the instrument(s) identified as such in Schedule ''A'' hereof.

Original Notes shall mean the Notes listed on Schedule ''A'' hereto as such, such Notes being instruments evidencing outstanding indebtedness of the Mortgagor (i) to the Government (including indebtedness which has been issued by the Mortgagor to a third party and guaranteed or insured as to payment by the Government) and (ii) to each other Mortgagee on the date of this Mortgage.

Outstanding Notes shall mean as of the date of determination, (i) all Notes theretofore issued, executed and delivered to any Mortgagee and (ii) any Notes guaranteed or insured as to payment by the Government, *except* (a) Notes referred to in clause (i) or (ii) for which the principal and interest have been fully paid and which have been canceled

by the Noteholder, and (b) Notes the payment for which has been provided for pursuant to Section [5.03].

Permitted Debt shall have the meaning specified in Section [3.08].

Permitted Encumbrances shall mean:

(1) as to the property specifically described in Granting Clause First, the restrictions, exceptions, reservations, conditions, limitations, interests and other matters which are set forth or referred to in such descriptions and each of which fits one or more of the clauses of this definition, PROVIDED, such matters do not in the aggregate materially detract from the value of the Mortgaged Property taken as a whole and do not materially impair the use of such property for the purposes for which it is held by the Mortgagor;

(2) liens for taxes, assessments and other governmental charges which are not delinquent;

(3) liens for taxes, assessments and other governmental charges already delinquent which are currently being contested in good faith by appropriate proceedings; PROVIDED the Mortgagor shall have set aside on its books adequate reserves with respect thereto;

(4) mechanics', workmen's, repairmen's, materialmen's, warehousemen's and carriers' liens and other similar liens arising in the ordinary course of business for charges which are not delinquent, or which are being contested in good faith and have not proceeded to judgment; PROVIDED the Mortgagor shall have set aside on its books adequate reserves with respect thereto;

(5) liens in respect of judgments or awards with respect to which the Mortgagor shall in good faith currently be prosecuting an appeal or proceedings for review and with respect to which the Mortgagor shall have secured a stay of execution pending such appeal or proceedings for review; PROVIDED the Mortgagor shall have set aside on its books adequate reserves with respect thereto;

(6) easements and similar rights granted by the Mortgagor over or in respect of any Mortgaged Property, PROVIDED that in the opinion of the Board or a duly authorized officer of the Mortgagor such grant will not impair the usefulness of such property in the conduct of the Mortgagor's business and will not be prejudicial to the interests of the Mortgagees, and similar rights granted by any predecessor in title of the Mortgagor;

(7) easements, leases, reservations or other rights of others in any property of the Mortgagor for streets, roads, bridges, pipes, pipe lines, railroads, electric transmission and distribution lines, telegraph and telephone lines, the removal of oil, gas, coal or other minerals and other similar purposes, flood rights, river control and development rights, sewage and drainage rights, restrictions against pollution and zoning laws and minor defects and irregularities in the record evidence of title, PROVIDED that such easements, leases, reservations, rights, restrictions, laws, defects and irregularities do not materially affect the marketability of title to such property and do not in the aggregate materially impair the use of the Mortgaged Property taken as a whole for the purposes for which it is held by the Mortgagor;

(8) liens upon lands over which easements or rights of way are acquired by the Mortgagor for any of the purposes specified in Clause [(7)] of this definition, securing indebtedness neither created, assumed nor guaranteed by the Mortgagor nor on account of which it customarily pays interest, which liens do not materially impair the use of such easements or rights of way for the purposes for which they are held by the Mortgagor;

(9) leases existing at the date of this instrument affecting property owned by the Mortgagor at said date which have been previously disclosed to the Mortgagees in writing and leases for a term of not more than two years (including any extensions or renewals) affecting property acquired by the Mortgagor after said date;

(10) terminable or short term leases or permits for occupancy, which leases or permits expressly grant to the Mortgagor the right to terminate them at any time on not more than six months' notice and which occupancy does not interfere with the operation of the business of the Mortgagor;

(11) any lien or privilege vested in any lessor, licensor or permittor for rent to become due or for other obligations or acts to be performed, the payment of which rent or performance of which other obligations or acts is required under leases, subleases, licenses or permits, so long as the payment of such rent or the performance of such other obligations or acts is not delinquent;

(12) liens or privileges of any employees of the Mortgagor for salary or wages earned but not yet payable;

(13) the burdens of any law or governmental regulation or permit requiring the Mortgagor to maintain certain facilities or perform certain acts as a condition of its occupancy of or interference with any public lands or any river or stream or navigable waters;

(14) any irregularities in or deficiencies of title to any rights-of-way for pipe lines, telephone lines, telegraph lines, power lines or appurtenances thereto, or other improvements thereon, and to any real estate used or to be used primarily for right-of-way purposes, PROVIDED that in the opinion of counsel for the Mortgagor, the Mortgagor shall have obtained from the apparent owner of the lands or estates therein covered by any such right-of-way a sufficient right, by the terms of the instrument granting such

right-of-way, to the use thereof for the construction, operation or maintenance of the lines, appurtenances or improvements for which the same are used or are to be used, or PROVIDED that in the opinion of counsel for the Mortgagor, the Mortgagor has power under eminent domain, or similar statutes, to remove such irregularities or deficiencies;

(15) rights reserved to, or vested in, any municipality or governmental or other public authority to control or regulate any property of the Mortgagor, or to use such property in any manner, which rights do not materially impair the use of such property, for the purposes for which it is held by the Mortgagor;

(16) any obligations or duties, affecting the property of the Mortgagor, to any municipality or governmental or other public authority with respect to any franchise, grant, license or permit;

(17) any right which any municipal or governmental authority may have by virtue of any franchise, license, contract or statute to purchase, or designate a purchaser of or order the sale of, any property of the Mortgagor upon payment of cash or reasonable compensation therefor or to terminate any franchise, license or other rights or to regulate the property and business of the Mortgagor; PROVIDED, HOWEVER, that nothing in this clause 17 is intended to waive any claim or rights that the Government may otherwise have under Federal laws;

(18) as to properties of other operating electric companies acquired after the date of this Mortgage by the Mortgagor as permitted by Section [3.10] hereof, reservations and other matters as to which such properties may be subject as more fully set forth in such Section;

(19) any lien required by law or governmental regulations as a condition to the transaction of any business or the exercise of any privilege or license, or to enable the Mortgagor to maintain self-insurance or to participate in any fund established to cover any insurance risks or in connection with workmen's compensation, unemployment insurance, old age pensions or other social security, or to share in the privileges or benefits required for companies participating in such arrangements; PROVIDED, HOWEVER, that nothing in this clause 19 is intended to waive any claim or rights that the Government may otherwise have under Federal laws;

(20) liens arising out of any defeased mortgage or indenture of the Mortgagor;

(21) the undivided interest of other owners, and liens on such undivided interests, in property owned jointly with the Mortgagor as well as the rights of such owners to such property pursuant to the ownership contracts;

(22) any lien or privilege vested in any lessor, licensor or permittor for rent to become due or for other obligations or acts to be performed, the payment of which rent or the performance of which other obligations or acts is required under leases, subleases, licenses or permits, so long as the payment of such rent or the performance of such other obligations or acts is not delinquent;

(23) purchase money mortgages permitted by Section [3.08]; and

(24) the Original Mortgage.

Property Additions shall mean Utility System property as to which the Mortgagor shall provide Title Evidence and which shall be (or, if retired, shall have been) subject to the lien of this Mortgage, which shall be properly chargeable to the Mortgagor's utility plant accounts under Accounting Requirements (including property constructed or acquired to replace retired property credited to such accounts) and which shall be:

(1) acquired (including acquisition by merger, consolidation, conveyance or transfer) or constructed by the Mortgagor after the date hereof, including property in the process of construction, insofar as not reflected on the books of the Mortgagor with respect to periods on or prior to the date hereof, and

(2) used or useful in the utility business of the Mortgagor conducted with the properties described in the Granting Clauses of this Mortgage, even though separate from and not physically connected with such properties.

''Property Additions'' shall also include:

(3) easements and rights-of-way that are useful for the conduct of the utility business of the Mortgagor, and

(4) property located or constructed on, over or under public highways, rivers or other public property if the Mortgagor has the lawful right under permits, licenses or franchises granted by a governmental body having jurisdiction in the premises or by the law of the State in which such property is located to maintain and operate such property for an unlimited, indeterminate or indefinite period or for the period, if any, specified in such permit, license or franchise or law and to remove such property at the expiration of the period covered by such permit, license or franchise or law, or if the terms of such permit, license, franchise or law require any public authority having the right to take over such property to pay fair consideration therefor.

''Property Additions'' shall NOT include:

(a) good will, going concern value, contracts, agreements, franchises, licenses or permits, whether acquired as such, separate and distinct from the property operated in connection therewith, or acquired as an incident thereto, or

(b) any shares of stock or indebtedness or certificates or evidences of interest therein or other securities, or

(c) any plant or system or other property in which the Mortgagor shall acquire only a leasehold interest, or any betterments, extensions, improvements or additions (other than movable physical personal property which the Mortgagor has the right to remove), of, upon or to any plant or system or other property in which the Mortgagor shall own only a leasehold interest unless (i) the term of the leasehold interest in the property to which such betterment, extension, improvement or addition relates shall extend for at least 75% of the useful life of such betterment, extension, improvement or addition and (ii) the lessor shall have agreed to give the Mortgagee reasonable notice and opportunity to cure any default by the Mortgagor under such lease and not to disturb any Mortgagee's possession of such leasehold estate in the event any Mortgagee succeeds to the Mortgagor's interest in such lease upon any Mortgagee's exercise of any remedies under this Mortgage so long as there is no default in the performance of the tenant's covenants contained therein, or

(d) any property of the Mortgagor subject to the Permitted Encumbrance described in clause [(23)] of the definition thereof.

Prudent Utility Practice shall mean any of the practices, methods and acts which, in the exercise of reasonable judgment, in light of the facts, including, but not limited to, the practices, methods and acts engaged in or approved by a significant portion of the electric utility industry prior thereto, known at the time the decision was made, would have been expected to accomplish the desired result consistent with cost-effectiveness, reliability, safety and expedition. It is recognized that Prudent Utility Practice is not intended to be limited to optimum practice, method or act to the exclusion of all others, but rather is a spectrum of possible practices, methods or acts which could have been expected to accomplish the desired result at the lowest reasonable cost consistent with cost-effectiveness, reliability, safety and expedition.

REA shall mean the Rural Electrification Administration of the United States Department of Agriculture, the predecessor of RUS.

Regulatory Created Assets shall mean the sum of any amounts properly recordable as unrecovered plant and regulatory study costs or as other regulatory assets, pursuant to Accounting Requirements.

Restricted Rentals shall mean all rentals required to be paid under finance leases and charged to income, exclusive of any amounts paid under any such lease (whether or not designated therein as rental or additional rental) for maintenance or repairs, insurance, taxes, assessments, water rates or similar charges. For the purpose of this definition the term ''finance lease'' shall mean any lease having a rental term (including the term for which such lease may be renewed or extended at the option of the lessee) in excess of 3 years and covering property having an initial cost in excess of $250,000 other than aircraft, ships, barges, automobiles, trucks, trailers, rolling stock and vehicles; office, garage and warehouse space; office equipment and computers.

RUS shall mean the Rural Utilities Service, an agency of the United States Department of Agriculture, or if at any time after the execution of this Mortgage RUS is not existing and performing the duties of administering a program of rural electrification as currently assigned to it, then the entity performing such duties at such time.

Security Interest shall mean any assignment, transfer, mortgage, hypothecation or pledge.

Subordinated Indebtedness shall mean secured indebtedness of the Mortgagor, payment of which shall be subordinated to the prior payment of the Notes in accordance with the provisions of Section [3.08] hereof by subordination agreement in form and substance satisfactory to each Mortgagee which approval will not be unreasonably withheld.

Supplemental Mortgage shall mean an instrument of the type described in Section [2.04].

Times Interest Earned Ratio (''TIER'') shall mean the ratio determined as follows: for each calendar year: add (i) patronage capital or margins of the Mortgagor and (ii) Interest Expense on Total Long-Term Debt of the Mortgagor and divide the total so obtained by Interest Expense on Total Long-Term Debt of the Mortgagor, *provided, however,* that in computing Interest Expense on Total Long-Term Debt, there shall be added, to the extent not otherwise included, an amount equal to 33–1/3% of the excess of Restricted Rentals paid by the Mortgagor over 2% of the Mortgagor's Equity.

Title Evidence shall mean with respect to any real property:

(1) an opinion of counsel to the effect that the Mortgagor has title, whether fairly deducible of record or based upon prescriptive rights (or, as to personal property, based on such evidence as counsel shall determine to be sufficient), as in the opinion of counsel is satisfactory for the use thereof in connection with the operations of the Mortgagor, and counsel in giving such opinion may disregard any irregularity or deficiency in the record evidence of title which, in the opinion of such counsel, can be cured by proceedings within the power of the Mortgagor or does not substantially impair the usefulness of such property for the purpose of the Mortgagor and may base such opinion upon counsel's own investigation or upon affidavits, certificates, abstracts of title, statements or investigations made by persons in whom such counsel has confidence or upon examination of a certificate or guaranty of title

or policy of title insurance in which counsel has confidence; or

(2) a mortgagee's policy of title insurance in the amount of the cost to the Mortgagor of the land included in Property Additions, as such cost is determined by the Mortgagor in accordance with the Accounting Requirements, issued in favor of the Mortgagees by an entity authorized to insure title in the states where the subject property is located, showing the Mortgagor as the owner of the subject property and insuring the lien of this Mortgage; and with respect to any *personal property* a certificate of the general manage or other duly authorized officer that the Mortgagor lawfully owns and is possessed of such property.

Total Assets shall mean an amount constituting total assets of the Mortgagor as computed pursuant to Accounting Requirements, but excluding any Regulatory Created Assets.

Total Long-Term Debt shall mean the total outstanding long-term debt of the Mortgagor as computed pursuant to Accounting Requirements.

Total Utility Plant shall mean the total of all property properly recorded in the utility plant accounts of the Mortgagor, pursuant to Accounting Requirements.

Uniform Commercial Code or UCC shall mean the UCC of the state referred to in Section [1.04], and if Mortgaged Property is located in a state other than that state, then as to such Mortgaged Property UCC refers to the UCC in effect in the state where such property is located.

Utility System shall mean the Electric System and all of the Mortgagor's interest in community infrastructure located substantially within its electric service territory, namely water and waste systems, solid waste disposal facilities, telecommunications and other electronic communications systems, and natural gas distribution systems.

SECTION 1.02. *General Rules of Construction:*

a. Accounting terms not referred to above are used in this Mortgage in their ordinary sense and any computations relating to such terms shall be computed in accordance with the Accounting Requirements.

b. Any reference to ''directors'' or ''board of directors'' shall be deemed to mean ''trustees'' or ''board of trustees,'' as the case may be.

SECTION 1.03. *Special Rules of Construction if RUS is a Mortgagee:* During any period that RUS is a Mortgagee, the following additional provisions shall apply:

a. In the case of any Notes that have been guaranteed or insured as to payment by RUS, as to such Notes RUS shall be considered to be the Noteholder, exclusively, regardless of whether such Notes are in the possession of RUS.

b. In the case of any prior approval rights conferred upon RUS by Federal statutes, including (without limitation) Section 7 of the Rural Electrification Act of 1936, as amended, with respect to the sale or disposition of property, rights, or franchises of the Mortgagor, all such statutory rights are reserved except to the extent that they are expressly modified or waived in this Mortgage.

SECTION 1.04. *Governing Law:* This Mortgage shall be construed in and governed by Federal law to the extent applicable, and otherwise by the laws of the State of _____.

SECTION 1.05 *Notices:* All demands, notices, reports, approvals, designations, or directions required or permitted to be given hereunder shall be in writing and shall be deemed to be properly given if sent by registered or certified mail, postage prepaid, or delivered by hand, or sent by facsimile transmission, receipt confirmed, addressed to the proper party or parties at the following address:

As to the Mortgagor:

_____

_____

_____

As to the Mortgagee:

Rural Utilities Service,
United States Department of Agriculture,
Washington, DC 20250–1500

_____

_____

_____

and as to any other person, firm, corporation or governmental body or agency having an interest herein by reason of being a Mortgagee, at the last address designated by such person, firm, corporation, governmental body or agency to the Mortgagor and the other Mortgagees. Any such party may from time to time designate to each other a new address to which demands, notices, reports, approvals, designations or directions may be addressed, and from and after any such designation the address designated shall be deemed to be the address of such party in lieu of the address given above.

ARTICLE II

ADDITIONAL NOTES

SECTION 2.01. *Additional Notes:* (a) Without the prior consent of any Mortgagee or any Noteholder, the Mortgagor may issue Additional Notes to the Government or to another lender or lenders for the purpose of acquiring, procuring or constructing new or replacement Eligible Property Additions which Notes will thereupon be secured equally and ratably with the Notes if each of the following requirements are satisfied:

(1) As evidenced by a certificate of an Independent certified public accountant sent to

each Mortgagee on or before the first advance of proceeds from such Additional Notes:

(i) The Mortgagor shall have achieved for each of the two calendar years immediately preceding the issuance of such Additional Notes, a TIER of not less than 1.5 and a DSC of not less than 1.25;

(ii) After taking into account the effect of such Additional Notes on the Total Long Term Debt of the Mortgagor, the ratio of the Mortgagor's Net Utility Plant to its Total Long Term Debt shall be greater than or equal to 1.0 on a pro forma basis;

(iii) After taking into account the effect of such Additional Notes on the Total Assets of such Mortgagor, the Mortgagor shall have Equity greater than or equal to 27 percent of Total Assets on a pro forma basis; and

(iv) The sum of the aggregate principal amount of such Additional Notes (if any) that are not related to the Electric System if added to the aggregate outstanding principal amount of all the existing Notes (if any) that are not related to the Electric System will not exceed 30% of the Mortgagor's Equity on a pro forma basis.

(2) No Event of Default has occurred and is continuing hereunder, or any event which with the giving of notice or lapse of time or both would become an Event of Default has occurred and is continuing.

(3) The Eligible Property Additions being constructed, acquired, procured or replaced are part of the Mortgagor's Utility System.

(4) The Borrower's general manager or other duly authorized officer shall send to each of the Mortgagees a certificate in substantially the form attached hereto as [Exhibit A] on or before the date of the first advance of proceeds from such Additional Notes.

(b) For purposes of this section:

(1) ''Eligible Property Additions'' shall mean Property Additions acquired or whose construction was completed not more than 5 years prior to the issuance of the Additional Notes and Property Additions acquired or whose construction is started and/or completed not more than 4 years after issuance of the Additional Notes, but shall exclude any Property Additions financed by any other debt secured under the Mortgage at the time additional Notes are issued;

(2) Notes are considered to be ''issued'' on, and the date of ''issuance'' shall be, the date on which they are executed by the Mortgagor; and

(3) For purposes of calculating the pro forma ratios in subparagraphs (a)(1)(ii) and (iii), the values for Total Long Term Debt and Total Assets before debt issuance and the values for Equity and Net Utility Plant shall be the most recently available end-of-month figures preceding the issuance of the Additional Notes, but in no case for a month ending more than 180 days preceding such issuance.

SECTION 2.02. *Refunding or Refinancing Notes:* The Mortgagor shall also have the right without the consent of any Mortgagee or any Noteholder to issue Additional Notes for the purpose of refunding or refinancing any Notes so long as the total amount of outstanding indebtedness evidenced by such Additional Note or Notes is not greater than 105% of the then outstanding principal balance of the Note or Notes being refunded or refinanced. PROVIDED, HOWEVER, that the Mortgagor may not exercise its rights under this Section if an Event of Default has occurred and is continuing, or any event which with the giving of notice or lapse of time or both would become an Event of Default has occurred and is continuing. On or before the first advance of proceeds from Notes issued under this section, the Mortgagor shall notify each Mortgagee of the refunding or refinancing. Additional Notes issued pursuant to this Section [2.02] will thereupon be secured equally and ratably with the Notes.

SECTION 2.03. *Other Additional Notes.* With the prior written consent of each Mortgagee, the Mortgagor may issue Additional Notes to the Government or any lender or lenders, which Notes will thereupon be secured equally and ratably with Notes without regard to whether any of the requirements of Sections [2.01] or [2.02] are satisfied.

SECTION 2.04. *Additional Lenders Entitled to the Benefits of This Mortgage:* Without the prior consent of any Mortgagee or any Noteholder, each new lender designated as a payee in any Additional Notes issued by the Mortgagor pursuant to Section [2.01] or [2.02] of this Mortgage shall become a Mortgagee hereunder upon the execution and delivery by the Mortgagor and such lender of a supplemental mortgage hereto designating such lender as a Mortgagee hereunder. Such new lender shall be entitled to the benefits of this Mortgage without further act or deed. Each Mortgagee and each person or entity that becomes a lender pursuant to Section [2.01] or [2.02] of this Mortgage shall, upon the request of the Mortgagor to do so, execute and deliver a supplement to this Mortgage in substantially the form set forth in Section [2.05] to evidence the addition of such new lender as an additional Mortgagee entitled to the benefits of this Mortgage. The failure of any existing Mortgagee to enter into such supplemental mortgage shall not deprive the new lender of its rights under this Mortgage; provided that such additional indebtedness otherwise conforms in all respects with the requirements for issuing Additional Notes under this Mortgage.

SECTION 2.05. *Form of Supplemental Mortgage:* (a) The form of supplemental mortgage referred to in Section [2.04] is attached to

this Mortgage as Exhibit B and hereby incorporated by reference as if set forth in full at this point.

(b) In the event that the Mortgagor subsequently issues Additional Notes pursuant to Sections [2.01] or [2.02] to any existing Mortgagee and that Mortgagee desires further assurance that such Additional Notes will be secured by the lien of the Mortgage, an instrument substantially in the form of the supplemental mortgage attached as Exhibit B may be used.

(c) In the event that the Mortgagor issues Additional Notes pursuant to Section [2.03] to either an existing Mortgagee or a new lender, in either case with the prior written consent of each Mortgagee, then an instrument substantially in the form of the supplemental mortgage attached as Exhibit B may also be used.

ARTICLE III—PARTICULAR COVENANTS OF THE MORTGAGOR

SECTION 3.01. *Payment of Debt Service on Notes:* The Mortgagor will duly and punctually pay the principal, premium, if any, and interest on the Notes in accordance with the terms of the Notes, the Loan Contracts, this Mortgage and any Supplemental Mortgage authorizing such Notes.

SECTION 3.02. *Warranty of Title:* (a) At the time of the execution and delivery of this instrument, the Mortgagor has good and marketable title in fee simple to the real property specifically described in Granting Clause First as owned in fee and good and marketable title to the interests in real property specifically described in Granting Clause [First], subject to no mortgage, lien, charge or encumbrance except as stated therein, and has full power and lawful authority to grant, bargain, sell, alien, remise, release, convey, assign, transfer, encumber, mortgage, pledge, set over and confirm said real property and interests in real property in the manner and form aforesaid.

(b) At the time of the execution and delivery of this instrument, the Mortgagor lawfully owns and is possessed of the personal property specifically described in Granting Clauses [First and Second], subject to no mortgage, lien, charge or encumbrance except as stated therein, and has full power and lawful authority to mortgage, assign, transfer, deliver, pledge and grant a continuing security interest in said property and, including any proceeds thereof, in the manner and form aforesaid.

(c) The Mortgagor hereby does and will forever warrant and defend the title to the property specifically described in Granting Clause First against the claims and demands of all persons whomsoever, except Permitted Encumbrances.

SECTION 3.03. *After-Acquired Property; Further Assurances; Recording:* (a) All property of every kind, other than Excepted Property, acquired by the Mortgagor after the date hereof, shall, immediately upon the acquisition thereof by the Mortgagor, and without any further mortgage, conveyance or assignment, become subject to the lien of this Mortgage; SUBJECT, HOWEVER, to Permitted Encumbrances and the exceptions, if any, to which all of the Mortgagees consent. Nevertheless, the Mortgagor will do, execute, acknowledge and deliver all and every such further acts, conveyances, mortgages, financing statements and assurances as any Mortgagee shall require for accomplishing the purposes of this Mortgage.

(b) The Mortgagor will cause this Mortgage and all Supplemental Mortgages and other instruments of further assurance, including all financing statements covering security interests in personal property, to be promptly recorded, registered and filed, and will execute and file such financing statements and cause to be issued and filed such continuation statements, all in such manner and in such places as may be required by law fully to preserve and protect the rights of all of the Mortgagees and Noteholders hereunder to all property comprising the Mortgaged Property. The Mortgagor will furnish to each Mortgagee:

(1) promptly after the execution and delivery of this instrument and of each Supplemental Mortgage or other instrument of further assurance, an Opinion of Counsel stating that, in the opinion of such Counsel, this instrument and all such Supplemental Mortgages and other instruments of further assurance have been properly recorded, registered and filed to the extent necessary to make effective the lien intended to be created by this Mortgage, and reciting the details of such action or referring to prior Opinions of Counsel in which such details are given, and stating that all financing statements and continuation statements have been executed and filed that are necessary fully to preserve and protect the rights of all of the Mortgagees and Noteholders hereunder, or stating that, in the opinion of such Counsel, no such action is necessary to make the lien effective; and

(2) within 30 days after _____ in each year beginning with the year ____, an Opinion of Counsel, dated as of such date, either stating that, in the opinion of such Counsel, such action has been taken with respect to the recording, registering, filing, re-recording, re-registering and re-filing of this instrument and of all Supplemental Mortgages, financing statements, continuation statements or other instruments of further assurances as is necessary to maintain the lien of this Mortgage (including the lien on any property acquired by the Mortgagor after the execution and delivery of this instrument and owned by the Mortgagor at the end of preceding calendar year) and reciting the details of such action or referring to

prior Opinions of Counsel in which such details are given, and stating that all financing statements and continuation statements have been executed and filed that are necessary to fully preserve and protect the rights of all of the Mortgagees and Noteholders hereunder, or stating that, in the opinion of such Counsel, no such action is necessary to maintain such lien.

SECTION 3.04. *Environmental Requirements and Indemnity:* (a) The Mortgagor shall, with respect to all facilities which may be part of the Mortgaged Property, comply with all Environmental Laws.

(b) The Mortgagor shall defend, indemnify, and hold harmless each Mortgagee, its successors and assigns, from and against any and all liabilities, losses, damages, costs, expenses (including but not limited to reasonable attorneys' fees and expenses), causes of actions, administrative proceedings, suits, claims, demands, or judgments of any nature arising out of or in connection with any matter related to the Mortgage Property and any Environmental Law, including but not limited to:

(1) the past, present, or future presence of any hazardous substance, contaminant, pollutant, or hazardous waste on or related to the Mortgaged Property;

(2) any failure at any time by the undersigned to comply with the terms of any order related to the Mortgaged Property and issued by any federal, state, or municipal department or agency (other than RUS) exercising its authority to enforce any Environmental Law; and

(3) any lien or claim imposed under any Environmental Law related to clause (1).

(c) Within 10 (ten) business days after receiving knowledge of any liability, losses, damages, costs, expenses (including but not limited to reasonable attorneys' fees and expenses), cause of action, administrative proceeding, suit, claim, demand, judgment, lien, reportable event including but not limited to the release of a hazardous substance, or potential or actual violation or non-compliance arising out of or in connection with the Mortgaged Property and any Environmental Law, the Mortgagor shall provide each Mortgagee with written notice of such matter. With respect to any matter upon which it has provided such notice, the Mortgagor shall immediately take any and all appropriate actions to remedy, cure, defend, or otherwise affirmatively respond to the matter.

SECTION 3.05. *Payment of Taxes:* The Mortgagor will pay or cause to be paid as they become due and payable all taxes, assessments and other governmental charges lawfully levied or assessed or imposed upon the Mortgaged Property or any part thereof or upon any income therefrom, and also (to the extent that such payment will not be contrary to any applicable laws) all taxes, assessments and other governmental charges lawfully levied, assessed or imposed upon the lien or interest of the Noteholders or of the Mortgagees in the Mortgaged Property, so that (to the extent aforesaid) the lien of this Mortgage shall at all times be wholly preserved at the cost of the Mortgagor and without expense to the Mortgagees or the Noteholders; PROVIDED, HOWEVER, that the Mortgagor shall not be required to pay and discharge or cause to be paid and discharged any such tax, assessment or governmental charge to the extent that the amount, applicability or validity thereof shall currently be contested in good faith by appropriate proceedings and the Mortgagor shall have established and shall maintain adequate reserves on its books for the payment of the same.

SECTION 3.06. *Authority to Execute and Deliver Notes, Loan Agreements and Mortgage; All Action Taken; Enforceable Obligations:* The Mortgagor is authorized under its articles of incorporation and bylaws [or code of regulations] and all applicable laws and by corporate action to execute and deliver the Notes, any Additional Notes, the Loan Agreements and this Mortgage. The Notes, the Loan Agreements and this Mortgage are, and any Additional Notes and Loan Agreements when executed and delivered will be, the valid and enforceable obligations of the Mortgagor in accordance with their respective terms.

SECTION 3.07. *Restrictions on Further Encumbrances on Property:* Except to secure Additional Notes, the Mortgagor will not, without the prior written consent of each Mortgagee, create or incur or suffer or permit to be created or incurred or to exist any Lien, charge, assignment, pledge, mortgage on any of the Mortgaged Property inferior to, prior to, or on a parity with the Lien of this Mortgage except for the Permitted Encumbrances. Subject to the provisions of Section [3.08], or unless approved by each of the Mortgagees, the Mortgagor will purchase all materials, equipment and replacements to be incorporated in or used in connection with the Mortgaged Property outright and not subject to any conditional sales agreement, chattel mortgage, bailment, lease or other agreement reserving to the seller any right, title or Lien.

SECTION 3.08. *Restrictions On Additional Permitted Debt:* The Mortgagor shall not incur, assume, guarantee or otherwise become liable in respect of any debt for borrowed money and Restricted Rentals (including Subordinated Debt) other than the following: (''Permitted Debt'')

(1) Additional Notes issued in compliance with Article II hereof;

(2) Purchase money indebtedness in non-Utility System property, in an amount not exceeding 10% of Net Utility Plant;

(3) Restricted Rentals in an amount not to exceed 5% of Equity during any 12 consecutive calendar month period;

(4) Unsecured lease obligations incurred in the ordinary course of business except Restricted Rentals;

(5) Debt represented by dividends declared but not paid; and

(6) Subordinated Indebtedness approved by each Mortgagee.

PROVIDED, However, that the Mortgagor may incur Permitted Debt without the consent of the Mortgagee only so long as there exists no Event of Default hereunder and there has been no continuing occurrence which with the passage of time and giving of notice could become an Event of Default hereunder.

PROVIDED, FURTHER, by executing this Mortgage any consent of RUS that the Mortgagor would otherwise be required to obtain under this Section is hereby deemed to be given or waived by RUS by operation of law to the extent, but only to the extent, that to impose such a requirement of RUS consent would clearly violate existing federal laws or government regulations.

SECTION 3.09. *Preservation of Corporate Existence and Franchises:* The Mortgagor will, so long as any Outstanding Notes exist, take or cause to be taken all such action as from time to time may be necessary to preserve its corporate existence and to preserve and renew all franchises, rights of way, easements, permits, and licenses now or hereafter to be granted or upon it conferred the loss of which would have a material adverse affect on the Mortgagor's financial condition or business. The Mortgagor will comply with all laws, ordinances, regulations, orders, decrees and other legal requirements applicable to it or its property the violation of which could have a material adverse affect on the Mortgagor's financial condition or business.

SECTION 3.10. *Limitations on Consolidations and Mergers:* The Mortgagor shall not, without the prior written approval of each Mortgagee, consolidate or merge with any other corporation or convey or transfer the Mortgaged Property substantially as an entirety unless: (1) such consolidation, merger, conveyance or transfer shall be on such terms as shall fully preserve the lien and security hereof and the rights and powers of the Mortgagees hereunder; (2) the entity formed by such consolidation or with which the Mortgagor is merged or the corporation which acquires by conveyance or transfer the Mortgaged Property substantially as an entirety shall execute and deliver to the Mortgagees a mortgage supplemental hereto in recordable form and containing an assumption by such successor entity of the due and punctual payment of the principal of and interest on all of the Outstanding Notes and the performance and observance of every covenant and condition of this Mortgage; (3) immediately after giving effect to such transaction, no default hereunder shall have occurred and be continuing; (4) the Mortgagor shall have delivered to the Mortgagees a certificate of its general manager or other officer, in form and substance satisfactory to each of the Mortgagees, which shall state that such consolidation, merger, conveyance or transfer and such supplemental mortgage comply with this subsection and that all conditions precedent herein provided for relating to such transaction have been complied with; (5) the Mortgagor shall have delivered to the Mortgagees an opinion of counsel in form and substance satisfactory to each of the Mortgagees; and (6) the entity formed by such consolidation or with which the Mortgagor is merged or the corporation which acquires by conveyance or transfer the Mortgaged Property substantially as an entirety shall be an entity—(A) having Equity equal to at least 27% of its Total Assets on a pro forma basis after giving effect to such transaction, (B) having a pro forma TIER of not less than 1.50 and a pro forma DSC of not less than 1.25 for each of the two preceding calendar years, and (C) having Net Utility Plant equal to or greater than 1.0 times its Total Long-Term Debt on a pro forma basis. Upon any consolidation or merger or any conveyance or transfer of the Mortgaged Property substantially as an entirety in accordance with this subsection, the successor entity formed by such consolidation or with which the Mortgagor is merged or to which such conveyance or transfer is made shall succeed to, and be substituted for, and may exercise every right and power of, the Mortgagor under this Mortgage with the same effect as if such successor entity had been named as the Mortgagor herein.

SECTION 3.11. *Limitations on Transfers of Property:* The Mortgagor may not, except as provided in [Section 3.10] above, without the prior written approval of each Mortgagee, sell, lease or transfer any Mortgaged Property to any other person or entity (including any subsidiary or affiliate of the Mortgagor), unless (1) there exists no Event of Default or occurrence which with the passing of time and the giving of notice would be an Event of Default, (2) fair market value is obtained for such property, (3) the aggregate value of assets so sold, leased or transferred in any 12-month period is less than 10% of Net Utility Plant, and (4) the proceeds of such sale, lease or transfer, less ordinary and reasonable expenses incident to such transaction, are immediately (i) applied as a prepayment of all Notes equally and ratably, (ii) in the case of dispositions of equipment, materials or scrap, applied to the purchase of other property useful in the Mortgagor's utility business, not necessarily of the same kind as the property disposed of, which shall forthwith become subject to the Lien of the Mortgage,

or (iii) applied to the acquisition or construction of utility plant.

SECTION 3.12. *Maintenance of Mortgaged Property:* (a) So long as the Mortgagor holds title to the Mortgaged Property, the Mortgagor will at all times maintain and preserve the Mortgaged Property which is used or useful in the Mortgagor's business and each and every part and parcel thereof in good repair, working order and condition, ordinary wear and tear and acts of God excepted, and in compliance with Prudent Utility Practice and in compliance with all applicable laws, regulations and orders, and will from time to time make all needed and proper repairs, renewals and replacements, and useful and proper alterations, additions, betterments and improvements, and will, subject to contingencies beyond its reasonable control, at all times use all reasonable diligence to furnish the consumers served by it through the Mortgaged Property, or any part thereof, with an adequate supply of electric power and energy. If any substantial part of the Mortgaged Property is leased by the Mortgagor to any other party, the lease agreement between the Mortgagor and the lessee shall obligate the lessee to comply with the provisions of subsections (a) and (b) of this Section in respect of the leased facilities and to permit the Mortgagor to operate the leased facilities in the event of any failure by the lessee to so comply.

(b) If in the sole judgement of any Mortgagee, the Mortgaged Property is not being maintained and repaired in accordance with paragraph (a) of this section, such Mortgagee may send to the Mortgagor a written report of needed improvements and the Mortgagor will upon receipt of such written report promptly undertake to accomplish such improvements.

(c) The Mortgagor further agrees that upon reasonable written request of any Mortgagee, which request together with the requests of any other Mortgagees shall be made no more frequently than once every three years, the Mortgagor will supply promptly to each Mortgagee a certification (hereinafter called the ''Engineer's Certification''), in form satisfactory to the requestor, prepared by a professional engineer, who shall be satisfactory to the Mortgagees, as to the condition of the Mortgaged Property. If in the sole judgment of any Mortgagee the Engineer's Certification discloses the need for improvements to the condition of the Mortgaged Property or any other operations of the Mortgagor, such Mortgagee may send to the Mortgagor a written report of such improvements and the Mortgagor will upon receipt of such written report promptly undertake to accomplish such of these improvements as are required by such Mortgagee.

SECTION 3.13. *Insurance; Restoration of Damaged Mortgaged Property:* (a) The Mortgagor will take out, as the respective risks are incurred, and maintain the classes and amounts of insurance in conformance with generally accepted utility industry standards for such classes and amounts of coverages of utilities of the size and character of the Mortgagor and consistent with Prudent Utility Practice.

(b) The foregoing insurance coverage shall be obtained by means of bond and policy forms approved by regulatory authorities having jurisdiction, and, with respect to insurance upon any part of the Mortgaged Property, shall provide that the insurance shall be payable to the Mortgagees as their interests may appear by means of the standard mortgagee clause without contribution. Each policy or other contract for such insurance shall contain an agreement by the insurer that, notwithstanding any right of cancellation reserved to such insurer, such policy or contract shall continue in force for at least 30 days after written notice to each Mortgagee of cancellation.

(c) In the event of damage to or the destruction or loss of any portion of the Mortgaged Property which is used or useful in the Mortgagor's business and which shall be covered by insurance, unless each Mortgagee shall otherwise agree, the Mortgagor shall replace or restore such damaged, destroyed or lost portion so that such Mortgaged Property shall be in substantially the same condition as it was in prior to such damage, destruction or loss, and shall apply the proceeds of the insurance for that purpose. The Mortgagor shall replace the lost portion of such Mortgaged Property or shall commence such restoration promptly after such damage, destruction or loss shall have occurred and shall complete such replacement or restoration as expeditiously as practicable, and shall pay or cause to be paid out of the proceeds of such insurance all costs and expenses in connection therewith.

(d) Sums recovered under any policy or fidelity bond by the Mortgagor for a loss of funds advanced under the Notes or recovered by any Mortgagee or any Noteholder for any loss under such policy or bond shall, unless applied as provided in the preceding paragraph, be used to finance construction of utility plant secured or to be secured by this Mortgage, or unless otherwise directed by the Mortgagees, be applied to the prepayment of the Notes *pro rata* according to the unpaid principal amounts thereof (such prepayments to be applied to such Notes and installments thereof as may be designated by the respective Mortgagee at the time of any such prepayment), or be used to construct or acquire utility plant which will become part of the Mortgaged Property. At the request of any Mortgagee, the Mortgagor shall exercise such rights and remedies which they may have under such policy or fidelity bond and which may be designated by such Mortgagee,

and the Mortgagor hereby irrevocably appoints each Mortgagee as its agent to exercise such rights and remedies under such policy or bond as such Mortgagee may choose, and the Mortgagor shall pay all costs and reasonable expenses incurred by the Mortgagee in connection with such exercise.

SECTION 3.14. *Mortgagee Right to Expend Money to Protect Mortgaged Property:* The Mortgagor agrees that any Mortgagee from time to time hereunder may, in its sole discretion, after having given 5 Business days prior written notice to Mortgagor, but shall not be obligated to, advance funds on behalf of Mortgagor, in order to insure the Mortgagor's compliance with any covenant, warranty, representation or agreement of the Mortgagor made in or pursuant to this Mortgage or any of the Loan Agreements, to preserve or protect any right or interest of the Mortgagees in the Mortgaged Property or under or pursuant to this Mortgage or any of the Loan Agreements, including without limitation, the payment of any insurance premiums or taxes and the satisfaction or discharge of any judgment or any Lien upon the Mortgaged Property or other property or assets of Mortgagor; *provided, however,* that the making of any such advance by or through any Mortgagee shall not constitute a waiver by any Mortgagee of any Event of Default with respect to which such advance is made nor relieve the Mortgagor of any such Event of Default. The Mortgagor shall pay to a Mortgagee upon demand all such advances made by such Mortgagee with interest thereon at a rate equal to that on the Note having the highest interest rate but in no event shall such rate be in excess of the maximum rate permitted by applicable law. All such advances shall be included in the obligations and secured by the security interest granted hereunder.

SECTION 3.15. *Time Extensions for Payment of Notes:* Any Mortgagee may, at any time or times in succession without notice to or the consent of the Mortgagor, or any other Mortgagee, and upon such terms as such Mortgagee may prescribe, grant to any person, firm or corporation who shall have become obligated to pay all or any part of the principal of (and premium, if any) or interest on any Note held by or indebtedness owed to such Mortgagee or who may be affected by the lien hereby created, an extension of the time for the payment of such principal, (and premium, if any) or interest, and after any such extension the Mortgagor will remain liable for the payment of such Note or indebtedness to the same extent as though it had at the time of such extension consented thereto in writing.

SECTION 3.16. *Application of Proceeds from Condemnation:* (a) In the event that the Mortgaged Property or any part thereof, shall be taken under the power of eminent domain, all proceeds and avails therefrom may be used to finance construction of utility plant secured or to be secured by this Mortgage. Any proceeds not so used shall forthwith be applied by the Mortgagor: first, to the ratable payment of any indebtedness secured by this Mortgage other than principal of or interest on the Notes; second, to the ratable payment of interest which shall have accrued on the Notes and be unpaid; third, to the ratable payment of or on account of the unpaid principal of the Notes, to such installments thereof as may be designated by the respective Mortgagee at the time of any such payment; and fourth, the balance shall be paid to whomsoever shall be entitled thereto.

(b) If any part of the Mortgaged Property shall be taken by eminent domain, each Mortgagee shall release the property so taken from the Mortgaged Property and shall be fully protected in so doing upon being furnished with:

(1) A certificate of a duly authorized officer of the Mortgagor requesting such release, describing the property to be released and stating that such property has been taken by eminent domain and that all conditions precedent herein provided or relating to such release have been complied with; and

(2) an opinion of counsel to the effect that such property has been lawfully taken by exercise of the right of eminent domain, that the award for such property so taken has become final and that all conditions precedent herein provided for relating to such release have been complied with.

SECTION 3.17. *Compliance with Loan Agreements; Notice of Amendments to and Defaults under Loan Agreements:* The Mortgagor will observe and perform all of the material covenants, agreements, terms and conditions contained in any Loan Agreement entered into in connection with the issuance of any of the Notes, as from time to time amended. The Mortgagor will send promptly to each Mortgagee notice of any default by the Mortgagor under any Loan Agreement and notice of any amendment to any Loan Agreement. Upon request of any Mortgagee, the Mortgagor will furnish to such Mortgagee single copies of such Loan Agreements and amendments thereto as such Mortgagee may request.

SECTION 3.18. *Rights of Way, etc., Necessary in Business:* The Mortgagor will use its best efforts to obtain all such rights of way, easements from landowners and releases from lienors as shall be necessary or advisable in the conduct of its business, and, if requested by any Mortgagee, deliver to such Mortgagee evidence satisfactory to such Mortgagee of the obtaining of such rights of way, easements or releases.

SECTION 3.19. *Limitations on Providing Free Electric Services.* The Mortgagor will not furnish or supply or cause to be furnished or

supplied any electric power, energy or capacity free of charge to any person, firm or corporation, public or private, and the Mortgagor will enforce the payment of any and all amounts owning to the Mortgagor by reason of the ownership and operation of the Utility System by discontinuing such use, output, capacity, or service, or by filing suit therefor within 90 days after any such accounts are due, or by both such discontinuance and by filing suit.

SECTION 3.20. *Keeping Books; Inspection by Mortgagee:* The Mortgagor will keep proper books, records and accounts, in which full and correct entries shall be made of all dealings or transactions of or in relation to the Notes and the Utility Systems, properties, business and affairs of the Mortgagor in accordance with the Accounting Requirements. The Mortgagor will at any and all times, upon the written request of any Mortgagee and at the expense of the Mortgagor, permit such Mortgagee by its representatives to inspect the Utility Systems and properties and properties, books of account, records, reports and other papers of the Mortgagor and to take copies and extracts therefrom, and will afford and procure a reasonable opportunity to make any such inspection, and the Mortgagor will furnish to each Mortgagee any and all such information as such Mortgagee may request, with respect to the performance by the Mortgagor of its covenants under this Mortgage, the Notes and the Loan Agreements.

ARTICLE IV

EVENTS OF DEFAULT AND REMEDIES

SECTION 4.01. *Events of Default:* Each of the following shall be an ''Event of Default'' under this Mortgage:

(a) default shall be made in the payment of any installment of or on account of interest on or principal of (or premium, if any associated with) any Note or Notes for more than five (5) Business Days after the same shall be required to be made;

(b) default shall be made in the due observance or performance of any other of the covenants, conditions or agreements on the part of the Mortgagor, in any of the Notes, Loan Agreements or in this Mortgage, and such default shall continue for a period of thirty (30) days after written notice specifying such default and requiring the same to be remedied and stating that such notice is a ''Notice of Default'' hereunder shall have been given to the Mortgagor by any Mortgagee; PROVIDED, HOWEVER that in the case of a default on the terms of a Note or Loan Agreement of a particular Mortgagee, the ''Notice of Default'' required under this paragraph may only be given by that Mortgagee;

(c) the Mortgagor shall file a petition in bankruptcy or be adjudicated a bankrupt or insolvent, or shall make an assignment for the benefit of its creditors, or shall consent to the appointment of a receiver of itself or of its property, or shall institute proceedings for its reorganization or proceedings instituted by others for its reorganization shall not be dismissed within sixty (60) days after the institution thereof;

(d) a receiver or liquidator of the Mortgagor or of any substantial portion of its property shall be appointed and the order appointing such receiver or liquidator shall not be vacated within sixty (60) days after the entry thereof;

(e) the Mortgagor shall forfeit or otherwise be deprived of its corporate charter or franchises, permits, easements, or licenses required to carry on any material portion of its business;

(f) a final judgment for an amount of more than $_____ shall be entered against the Mortgagor and shall remain unsatisfied or without a stay in respect thereof for a period of sixty (60) days; or,

(g) any material representation or warranty made by the Mortgagor herein, in the Loan Agreements or in any certificate or financial statement delivered hereunder or thereunder shall prove to be false or misleading in any material respect at the time made.

SECTION 4.02. *Acceleration of Maturity; Rescission and Annulment:*

(a) If an Event of Default described in Section [4.01(a)] has occurred and is continuing, any Mortgagee upon which such default has occurred may declare the principal of all its Notes secured hereunder to be due and payable immediately by a notice in writing to the Mortgagor and to the other Mortgagees (failure to provide said notice to any other Mortgagee shall not affect the validity of any acceleration of the Note or Notes by such Mortgagee), and upon such declaration, all unpaid principal (and premium, if any) and accrued interest so declared shall become due and payable immediately, anything contained herein or in any Note or Notes to the contrary notwithstanding.

(b) If any other Event of Default shall have occurred and be continuing, any Mortgagee may declare the principal of all its Notes secured hereunder to be due and payable immediately by a notice in writing to the Mortgagor and to the other Mortgagees (failure to provide said notice to any other Mortgagee shall not affect the validity of any acceleration of the Note or Notes by such Mortgagee), and upon such declaration, all unpaid principal (and premium, if any) and accrued interest so declared shall become due and payable immediately, anything contained herein or in any Note or Notes to the contrary notwithstanding.

(c) Upon receipt of actual knowledge of or any notice of acceleration by any Mortgagee, any other Mortgagee may declare the principal of all of its Notes to be due and payable

immediately by a notice in writing to the Mortgagor and upon such declaration, all unpaid principal (and premium, if any) and accrued interest so declared shall become due and payable immediately, anything contained herein or in any Note or Notes or Loan Agreements to the contrary notwithstanding.

(d) If after the unpaid principal of (and premium, if any) and accrued interest on any of the Notes shall have been so declared to be due and payable, all payments in respect of principal and interest which shall have become due and payable by the terms of such Note or Notes (other than amounts due as a result of the acceleration of the Notes) shall be paid to the respective Mortgagees, and (i) all other defaults under the Loan Agreements, the Notes and this Mortgage shall have been made good or cured to the satisfaction of the Mortgagees representing at least 80% of the aggregate unpaid principal balance of all of the Notes then Outstanding, (ii) proceedings to foreclose the lien of this Mortgage have not been commenced, and (iii) all reasonable expenses paid or incurred by the Mortgagees in connection with the acceleration shall have been paid to the respective Mortgagees, then in every such case such Mortgagees representing at least 80% of the aggregate unpaid principal balance of all of the Notes then Outstanding may by written notice to the Mortgagor, for purposes of this Mortgage, annul such declaration and waive such default and the consequences thereof, but no such waiver shall extend to or affect any subsequent default or impair any right consequent thereon.

SECTION 4.03. *Remedies of Mortgagees:* If one or more of the Events of Default shall occur and be continuing, any Mortgagee personally or by attorney, in its or their discretion, may, in so far as not prohibited by law:

(a) take immediate possession of the Mortgaged Property, collect and receive all credits, outstanding accounts and bills receivable of the Mortgagor and all rents, income, revenues, proceeds and profits pertaining to or arising from the Mortgaged Property, or any part thereof, whether then past due or accruing thereafter, and issue binding receipts therefor; and manage, control and operate the Mortgaged Property as fully as the Mortgagor might do if in possession thereof, including, without limitation, the making of all repairs or replacements deemed necessary or advisable by such Mortgagee in possession;

(b) proceed to protect and enforce the rights of all of the Mortgagees by suits or actions in equity or at law in any court or courts of competent jurisdiction, whether for specific performance of any covenant or any agreement contained herein or in aid of the execution of any power herein granted or for the foreclosure hereof or hereunder or for the sale of the Mortgaged Property, or any part thereof, or to collect the debts hereby secured or for the enforcement of such other or additional appropriate legal or equitable remedies as may be deemed necessary or advisable to protect and enforce the rights and remedies herein granted or conferred, and in the event of the institution of any such action or suit the Mortgagee instituting such action or suit shall have the right to have appointed a receiver of the Mortgaged Property and of all proceeds, rents, income, revenues and profits pertaining thereto or arising therefrom, whether then past due or accruing after the appointment of such receiver, derived, received or had from the time of the commencement of such suit or action, and such receiver shall have all the usual powers and duties of receivers in like and similar cases, to the fullest extent permitted by law, and if application shall be made for the appointment of a receiver the Mortgagor hereby expressly consents that the court to which such application shall be made may make said appointment; and

(c) sell or cause to be sold all and singular the Mortgaged Property or any part thereof, and all right, title, interest, claim and demand of the Mortgagor therein or thereto, at public auction at such place in any county (or its equivalent locality) in which the property to be sold, or any part thereof, is located, at such time and upon such terms as may be specified in a notice of sale, which shall state the time when and the place where the sale is to be held, shall contain a brief general description of the property to be sold, and shall be given by mailing a copy thereof to the Mortgagor at least fifteen (15) days prior to the date fixed for such sale and by publishing the same once in each week for two successive calendar weeks prior to the date of such sale in a newspaper of general circulation published in said locality or, if no such newspaper is published in such locality, in a newspaper of general circulation in such locality, the first such publication to be not less than fifteen (15) days nor more than thirty (30) days prior to the date fixed for such sale. Any sale to be made under this subparagraph (c) of this Section [4.03] may be adjourned from time to time by announcement at the time and place appointed for such sale or for such adjourned sale or sales, and without further notice or publication the sale may be had at the time and place to which the same shall be adjourned; *provided, however,* that in the event another or different notice of sale or another or different manner of conducting the same shall be required by law the notice of sale shall be given or the sale be conducted, as the case may be, in accordance with the applicable provisions of law. The expense incurred by any Mortgagee (including, but not limited to, receiver's fees, counsel fees, cost of advertisement and agents' compensation) in the exercise of any of the remedies provided

in this Mortgage shall be secured by this Mortgage.

(d) In the event that a Mortgagee proceeds to enforce remedies under this Section, any other Mortgagee may join in such proceedings. In the event that the Mortgagees are not in agreement with the method or manner of enforcement chosen by any other Mortgagee, the Mortgagees representing a majority of the aggregate unpaid principal balance on the then Outstanding Notes may direct the method and manner in which remedial action will proceed.

SECTION 4.04. *Application of Proceeds from Remedial Actions:* Any proceeds or funds arising from the exercise of any rights or the enforcement of any remedies herein provided after the payment or provision for the payment of any and all costs and expenses in connection with the exercise of such rights or the enforcement of such remedies shall be applied first, to the ratable payment of indebtedness hereby secured other than the principal of or interest on the Notes; second, to the ratable payment of interest which shall have accrued on the Notes and which shall be unpaid; third, to the ratable payment of or on account of the unpaid principal of the Notes; and the balance, if any, shall be paid to whomsoever shall be entitled thereto.

SECTION 4.05. *Remedies Cumulative; No Election:* Every right or remedy herein conferred upon or reserved to the Mortgagees or to the Noteholders shall be cumulative and shall be in addition to every other right and remedy given hereunder or now or hereafter existing at law, or in equity, or by statute. The pursuit of any right or remedy shall not be construed as an election.

SECTION 4.06. *Waiver of Appraisement Rights; Marshaling of Assets Not Required:* The Mortgagor, for itself and all who may claim through or under it, covenants that it will not at any time insist upon or plead, or in any manner whatever claim, or take the benefit or advantage of, any appraisement, valuation, stay, extension or redemption laws now or hereafter in force in any locality where any of the Mortgaged Property may be situated, in order to prevent, delay or hinder the enforcement or foreclosure of this Mortgage, or the absolute sale of the Mortgaged Property, or any part thereof, or the final and absolute putting into possession thereof, immediately after such sale, of the purchaser or purchasers thereat, and the Mortgagor, for itself and all who may claim through or under it, hereby waives the benefit of all such laws unless such waiver shall be forbidden by law. Under no circumstances shall there be any marshalling of assets upon any foreclosure or to other enforcement of this Mortgage.

SECTION 4.07. *Notice of Default:* The Mortgagor covenants that it will give immediate written notice to each Mortgagee of the occurrence of any Event of Default or in the event that any right or remedy described in Sections [4.02] and [4.03] hereof is exercised or enforced or any action is taken to exercise or enforce any such right or remedy.

ARTICLE V—POSSESSION UNTIL DEFAULT-DEFEASANCE CLAUSE

SECTION 5.01. *Possession Until Default:* Until some one or more of the Events of Default shall have happened, the Mortgagor shall be suffered and permitted to retain actual possession of the Mortgaged Property, and to manage, operate and use the same and any part thereof, with the rights and franchises appertaining thereto, and to collect, receive, take, use and enjoy the rents, revenues, issues, earnings, income, proceeds, products and profits thereof or therefrom, subject to the provisions of this Mortgage.

SECTION 5.02. *Defeasance:* If the Mortgagor shall pay or cause to be paid the whole amount of the principal of (and premium, if any) and interest on the Notes at the times and in the manner therein provided, and shall also pay or cause to be paid all other sums payable by the Mortgagor hereunder or under any Loan Agreement and shall keep and perform, all covenants herein required to be kept and performed by it, then and in that case, all property, rights and interest hereby conveyed or assigned or pledged shall revert to the Mortgagor and the estate, right, title and interest of the Mortgagee so paid shall thereupon cease, determine and become void and such Mortgagee, in such case, on written demand of the Mortgagor but at the Mortgagor's cost and expense, shall enter satisfaction of the Mortgage upon the record. In any event, each Mortgagee, upon payment in full to such Mortgagee by the Mortgagor of all principal of (and premium, if any) and interest on any Note held by such Mortgagee and the payment and discharge by the Mortgagor of all charges due to such Mortgagee hereunder or under any Loan Agreement, shall execute and deliver to the Mortgagor such instrument of satisfaction, discharge or release as shall be required by law in the circumstances.

SECTION 5.03. *Special Defeasance:* Other than any Notes excluded by the foregoing Sections 5.01 and 5.02 and Notes which have become due and payable, the Mortgagor may cause the Lien of this Mortgage to be defeased with respect to any Note for which it has deposited or caused to be deposited in trust solely for the purpose an amount sufficient to pay and discharge the entire indebtedness on such Note for principal (and premium, if any) and interest to the date of maturity thereof; PROVIDED, HOWEVER, that depository serving as trustee for such trust must first be accepted as such by the Mortgagee whose Notes are being defeased under this section. In such event, such a Note will

no longer be considered to be an Outstanding Note for purposes of this Mortgage and the Mortgagee shall execute and deliver to the Mortgagor such instrument of satisfaction, discharge or release as shall be required by law in the circumstances.

ARTICLE VI

MISCELLANEOUS

SECTION 6.01. *Property Deemed Real Property:* It is hereby declared to be the intention of the Mortgagor that any electric generating plant or plants and facilities and all electric transmission and distribution lines, or other Electric System or Utility System facilities, embraced in the Mortgaged Property, including (without limitation) all rights of way and easements granted or given to the Mortgagor or obtained by it to use real property in connection with the construction, operation or maintenance of such plant, lines, facilities or systems, and all other property physically attached to any of the foregoing, shall be deemed to be real property.

SECTION 6.02. *Mortgage to Bind and Benefit Successors and Assigns:* All of the covenants, stipulations, promises, undertakings and agreements herein contained by or on behalf of the Mortgagor shall bind its successors and assigns, whether so specified or not, and all titles, rights and remedies hereby granted to or conferred upon the Mortgagees shall pass to and inure to the benefit of the successors and assigns of the Mortgagees and shall be deemed to be granted or conferred for the ratable benefit and security of all who shall from time to time be a Mortgagee. The Mortgagor hereby agrees to execute such consents, acknowledgements and other instruments as may be reasonably requested by any Mortgagee in connection with the assignment, transfer, mortgage, hypothecation or pledge of the rights or interests of such Mortgagee hereunder or under the Notes or in and to any of the Mortgaged Property.

SECTION 6.03. *Headings:* The descriptive headings of the various articles and sections of this Mortgage and also the table of contents were formulated and inserted for convenience only and shall not be deemed to affect the meaning or construction of any of the provisions hereof.

SECTION 6.04. *Severability Clause:* In case any provision of this Mortgage or in the Notes or in the Loan Agreements shall be invalid or unenforceable, the validity, legality and enforceability of the remaining provisions thereof shall not in any way be affected or impaired, nor shall any invalidity or unenforceability as to any Mortgagee hereunder affect or impair the rights hereunder of any other Mortgagee.

SECTION 6.05. *Mortgage Deemed Security Agreement:* To the extent that any of the property described or referred to in this Mortgage is governed by the provisions of the UCC this Mortgage is hereby deemed a ''security agreement'' under the UCC, and, if so elected by any Mortgagee, a ''financing statement'' under the UCC for said security agreement. The mailing addresses of the Mortgagor as debtor, and the Mortgagees as secured parties are as set forth in Section [1.05] hereof. If any Mortgagee so directs the Mortgagor to do so, the Mortgagor shall file as a financing statement under the UCC for said security agreement and for the benefit of all of the Mortgagees, an instrument other than this Mortgage. In such case, the instrument to be filed shall be in a form customarily accepted by the filing office as a financing statement. PROCEEDS OF COLLATERAL ARE COVERED HEREBY.

SECTION 6.06. *Indemnification by Mortgagor of Mortgagees:* The Mortgagor agrees to indemnify and save harmless each Mortgagee against any liability or damages which any of them may incur or sustain in the exercise and performance of their rightful powers and duties hereunder. For such reimbursement and indemnity, each Mortgagee shall be secured under this Mortgage in the same manner as the Notes and all such reimbursements for expense or damage shall be paid to the Mortgagee incurring or suffering the same with interest at the rate specified in Section [3.14] hereof. The Mortgagor's obligation to indemnify the Mortgagees under this section and under Section [3.04] shall survive the satisfaction of the Notes, the reconveyance or foreclosure of this Mortgage, the acceptance of a deed in lieu of foreclosure, or any transfer or abandonment of the Mortgaged Property.

IN WITNESS WHEREOF, _____ as Mortgagor, has caused this Restated Mortgage and Security Agreement to be signed in its name and its corporate seal to be hereunto affixed and attested by its officers thereunto duly authorized, and UNITED STATES OF AMERICA, as Mortgagee, and as Mortgagee, has caused this Restated Mortgage and Security Agreement to be signed in its name by duly authorized persons, all as of the day and year first above written.

_____

(SEAL)

By: _____

President

Attest: _____

Title: _____

Executed by the Mortgagor in the presence of:

_____

_____

Witnesses

UNITED STATES OF AMERICA

By: Director, of the _____ Rural Utilities Service

Executed by the United States of America, Mortgagee, in the presence of:

_____

_____

Witnesses

By:

(SEAL)

Attest: _____

Title: _____

Executed by the above-named Mortgagee in the presence of:

_____

_____

Witnesses

SCHEDULE A

1. The Maximum Debt Limit is _____.

2. The Original Mortgage as described in the [first] WHEREAS clause above is _____.

3. The outstanding secured indebtedness described in the [fourth] WHEREAS clause above as evidenced by the Original Notes is as follows:

[Note this requires computation of principal balances, not merely a toting up of the original face amounts of the notes. Alternative approaches may be used by the parties where legally effective and mutually agreeable.]

SCHEDULE B—PROPERTY SCHEDULE

The fee and leasehold interests in real property referred to in Section Subclause (a) of Granting Clause One are _____.

The counties referred to in Subclause (B) of Granting Clause One are _____.

SCHEDULE C—EXCEPTED PROPERTY

STATE OF _____

COUNTY OF _____

On this _____ day of _____, 19 ___, before me appeared _____ and _____ personally known, by me and having been duly sworn by me, did say that they are the President and Secretary, respectively, of _____, a _____ corporation, and that the seal affixed to the foregoing instrument is the corporate seal of said corporation, and that said instrument was signed and sealed in behalf of said corporation by authority of its Board, and said _____ and _____ acknowledged that the execution of said instrument was a free act and deed of said corporation.

IN WITNESS whereof, I have hereunto set my hand and official seal the day and year last above written.

_____

Notary Public

(Notarial Seal)

My commission expires:

DISTRICT OF COLUMBIA) SS

The foregoing instrument was acknowledged before me this_____ day of 19_____, by _____ Director, _____ Regional Division of the Rural Utilities Service, acknowledging an agency of the United States of America, on behalf of the Rural Utilities Service, United States of America.

_____

Notary Public

(Notarial Seal)

My Commission expires:

COMMONWEALTH OF VIRGINIA) SS

BEFORE ME, a Notary Public, in and for the Commonwealth of Virginia, appeared in person _____, signing for the Governor of the National Rural Utilities cooperative Finance Corporation, to me personally known, and known to be the identical person who subscribed the name of said corporation to the foregoing instrument, being by me duly sworn, and who stated that she/he is duly authorized to execute the foregoing instrument on behalf of said corporation, and further stated and acknowledged that she/he executed the foregoing instrument as a free and voluntary act and deed of said corporation for the consideration therein mentioned and set forth.

IN TESTIMONY WHEREOF, I have hereunto set my hand and official seal this _____ day of _____, 19_____.

_____

Notary Public

(Notarial Seal)

My commission expires:

EXHIBIT A—MANAGER'S CERTIFICATE

MANAGER'S CERTIFICATE REQUIRED UNDER MORTGAGE SECTION 2.01 FOR ADDITIONAL NOTES

On behalf on _____[Name of Borrower] (the ''Borrower''), I _____ hereby certify as follows:

1. I am the Manager of the Borrower and have been duly authorized to deliver this certificate in connection with the Additional Note or Notes to be issued on or about _____ [Date Note or Notes are to be Signed] pursuant to Section [2.01] of the Mortgage dated _____.

2. No Event of Default has occurred and is continuing under the Mortgage, or any event which with the giving of notice or lapse of time or both would become an Event of Default has occurred and is continuing.

3. The Additional Notes described in paragraph 1 are for the purpose of funding Property Additions being constructed, acquired, procured or replaced that are or will become part of the Borrower's Utility System.

4. The Property Additions referred to in paragraph 3 are Eligible Property Additions, i.e. Property Additions acquired or whose construction was completed not more than 5 years prior to the issuance of additional Notes and Property Additions acquired or whose construction is started and/or completed not more than 4 years after issuance of the additional Notes, but shall exclude any Property Additions financed by any other debt secured under the Mortgage at the time additional Notes are issued.

5. I have reviewed the certificate of the Independent certified public accountant also being delivered to each of the Mortgagees pursuant to Section [2.01] in connection with the aforesaid Additional Note or Notes and concur with the conclusions expressed therein.

6. Capitalized terms that are used in this certificate but are not defined herein have the meanings defined in the Mortgage.

[Signed] _____

[Dated] _____

[Name] _____

[Title] _____

[Name and Address of Borrower] _____

_____

_____

Exhibit B—Form of Supplemental Mortgage

Supplemental Mortgage and Security Agreement, dated as of _____, _____, _____, (hereinafter sometimes called this ''Supplemental Mortgage'') is made by and between _____ (hereinafter called the ''Mortgagor''), a corporation existing under the laws of the State of _____, and the UNITED STATES OF AMERICA acting by and through the Administrator of the Rural Utilities Service (hereinafter called the ''Government''), _____ (Supplemental Lender) (hereinafter called _____), a _____ existing under the laws of _____, and intended to confer rights and benefits on both the Government and _____ and _____ in accordance with this Supplemental Mortgage and the Original Mortgage (hereinafter defined) (the Government and the Supplemental Lenders being herein sometimes collectively referred to as the ''Mortgagees'').

RECITALS

Whereas, the Mortgagor, the Government and _____ are parties to that certain Restated Mortgage and Security Agreement, as supplemented, amended or restated (the ''Original Mortgage'' identified in Schedule ''A'' of this Mortgage) originally entered into between the Mortgagor, the Government acting by and through the Administrator of the Rural Utilities Service (hereinafter called ''RUS''), and _____; and

Whereas, the Mortgagor deems it necessary to borrow money for its corporate purposes and to issue its promissory notes and other debt obligations therefor, and to mortgage and pledge its property hereinafter described or mentioned to secure the payment of the same, and to enter into this Supplemental Mortgage pursuant to which all secured debt of the Mortgagor hereunder shall be secured on parity, and to add _____ as a secured party hereunder and under the Original Mortgage (the Supplemental Mortgage and the Original Mortgage, as it may have been previously amended or supplemented, hereinafter may be called collectively the ''RUS Mortgage''); and

Whereas, the RUS Mortgage, as supplemented hereby, preserves the priority of the Original Mortgage for the pro rata benefit of all the Mortgagees and secures the payment of all of the Mortgagor's outstanding indebtedness as listed in the Instruments Recital of Schedule ''A''; and

Whereas, all acts necessary to make this Supplemental Mortgage a valid and binding legal instrument for the security of such notes and obligations, subject to the terms of the RUS Mortgage, have been in all respects duly authorized:

Now, Therefore, This Supplemental Mortgage Witnesseth: That to secure the payment of the principal of (and premium, if any) and interest on all Notes issued hereunder according to their tenor and effect, and the performance of all provisions therein and herein contained, and in consideration of the covenants herein contained and the purchase or guarantee of Notes by the guarantors or holders thereof, the Mortgagor has mortgaged, pledged and granted a continuing security interest in, and by these presents does hereby grant, bargain, sell, alienate, remise, release, convey, assign, transfer, hypothecate, pledge, set over and confirm, pledge and grant a continuing security interest in for the purposes hereinafter expressed [other language may be required under various state laws], unto the Mortgagees all property, rights, privileges and franchises of the Mortgagor of every kind and description, real, personal or mixed, tangible and intangible, of the kind or nature specifically mentioned herein or any other kind or nature, except any Excepted Property set forth on Schedule ''C'' hereof owned or hereafter acquired by the Mortgagor (by purchase, consolidation, merger, donation, construction, erection or in any other way) wherever located, including (without limitation) all and singular the following:

A. All of those fee and leasehold interests in real property set forth in Schedule ''B'' hereto, subject in each case to those matters set forth in such Schedule; and

B. All of those fee and leasehold interests in real property set forth in Schedule ''B'' of

the Original Mortgage or in any restatement, amendment or supplement thereto, subject in each case to those matters set forth in such Schedule; and

C. All of the kinds, types or items of property, now owned or hereafter acquired, described as Mortgaged Property in the Original Mortgage or in any restatement, amendment to supplement thereto as Mortgaged Property.

It is Further Agreed and Covenanted That the Original Mortgage, as previously restated, amended or supplemented, and this Supplement shall constitute one agreement and the parties hereto shall be bound by all of the terms thereof and, without limiting the foregoing.

1. All capitalized terms not defined herein shall have the meaning given in Article I of the Original Mortgage.

2. This Supplemental Mortgage is one of the Supplemental Mortgages contemplated by Article II of the Original Mortgage.

In Witness Whereof, _____ as Mortgagor.

[ACKNOWLEDGEMENTS]

SUPPLEMENTAL MORTGAGE SCHEDULE A—MAXIMUM DEBT LIMIT AND OTHER INFORMATION

1. The Maximum Debt Limit is _____.

2. The Original Mortgage as described in the first WHEREAS clause above is _____.

3. The outstanding secured indebtedness described in the third WHEREAS clause above is _____.

SUPPLEMENTAL MORTGAGE SCHEDULE B—PROPERTY SCHEDULE

The fee and leasehold interests in real property referred to in clause A of the granting clause are _____.

SUPPLEMENTAL MORTGAGE SCHEDULE C—EXCEPTED PROPERTY

[60 FR 36888, July 18, 1995, as amended at 60 FR 67410, Dec. 29, 1995]

Subpart C—Loan Contracts With Distribution Borrowers

SOURCE: 60 FR 67410, Dec. 29, 1995, unless otherwise noted.

§1718.100 General.

(a) *Purpose.* The purpose of this subpart is to set forth the policies, requirements, and procedures governing loan contracts entered into between the Rural Utilities Service (RUS) and distribution borrowers or, in some cases, other electric borrowers.

(b) *Flexibility for individual circumstances.* The intent of this subpart is to provide the flexibility to address the different needs and different credit risks of individual borrowers, and other special circumstances of individual lending situations. The model loan contract contained in Appendix A of this subpart provides an example of what a loan contract with an ''average'' or ''typical'' distribution borrower may look like under ''average'' or ''typical'' circumstances. Depending on the credit risks and other circumstances of individual loans, RUS may execute loan contracts with provisions that are substantially different than those set forth in the model. RUS may develop alternative model loan contract provisions. If it does, such provisions will be made available to the public.

(c) *Resolution of any differences in contractual provisions.* If any provision of the loan contract appears to be in conflict with provisions of the mortgage, the loan contract shall have precedence with respect to the contractual relationship between the borrower and RUS with respect to such provision. If either document is silent on a matter addressed in the other document, the other document shall have precedence with respect to the contractual relationship between the borrower and RUS with respect to such matter.

(d) *Certain loan contract provisions subject to subsequent rulemaking.* If a loan contract provision imposes an obligation or limitation on the borrower whose interpretation or specification is subject to RUS regulations or the discretion of the Administrator or RUS, such interpretation or specification shall be subject to subsequent rulemaking. Such interpretation or specification of the borrower's obligations or limitations may not exceed the authority granted to the Administrator or RUS in the loan contract provision.

§1718.101 Applicability.

(a) *Distribution borrowers.* The provisions of this subpart apply to all distribution borrowers that obtain a loan or loan guarantee from RUS approved

on or after January 29, 1996. Distribution borrowers that obtain a lien accommodation or any other form of financial assistance from RUS after January 29, 1996, may be required to execute a new loan contract and new mortgage. Moreover, any distribution borrower may submit a request to RUS that a new loan contract and new mortgage be executed. Within the constraints of time and staff resources, RUS will attempt to honor such requests. Borrowers must first obtain the concurrence of any other mortgagees on their existing mortgage before a new mortgage can be executed.

(b) *Other borrowers.* Borrowers other than distribution borrowers may also submit requests for execution of a new loan contract pursuant to this subpart and a new mortgage pursuant to subpart B of this part. RUS may approve such requests if it determines that such approval is in the government's financial interest. If other mortgagees are on the borrower's existing mortgage, their concurrence would be required before a new mortgage could be executed.

§ 1718.102 Definitions.

For the purposes of this subpart:

Borrower means any organization that has an outstanding loan made or guaranteed by the Rural Utilities Service (RUS) or its predecessor, the Rural Electrification Administration, for rural electrification, or that is seeking such financing.

Distribution borrower means a borrower that sells or intends to sell electric power and energy at retail in rural areas, the latter being defined in 7 CFR 1710.2.

Loan documents means the mortgage (or other security instrument acceptable to RUS), the loan contract, and the promissory note entered into between the borrower and RUS.

§ 1718.103 Loan contract provisions.

Loan contracts executed pursuant to this subpart shall contain such provisions as RUS determines are appropriate to further the purposes of the RE Act and to ensure that the security for the loan will be reasonably adequate and that the loan will be repaid according to the terms of the promissory note. Such loan contracts will contain provisions addressing, but not necessarily limited to, the following matters:

(a) Description of the purpose of the loan;

(b) Specification of the interest to be charged on the loan, including the method for determining the interest rate if it is not fixed for the entire term of the loan;

(c) Specification of the method for repaying the loan principal, including the final maturity of the loan;

(d) The conditions under which the loan may be prepaid before its maturity date, including but not limited to requirements regarding the prepayment of loans made concurrently by RUS and another secured lender;

(e) The method for making scheduled payments on the loan;

(f) Accounting principles and system of accounts, and RUS authority to approve the accountant used by the borrower;

(g) The method and time period for advancing loan funds and the conditions precedent to the advance of funds;

(h) Representations and warranties by the borrower as a condition of obtaining the loan, including but not limited to: the legal authority of the borrower to enter into the loan contract and operate its system; that the loan documents will be a legal, valid and binding obligation of the borrower enforceable according to their terms; compliance of the borrower in all material respects with all federal, state, and local laws, regulations, codes, and orders; existence of any pending or threatened legal actions that could have a material adverse effect on the borrower's ability to perform its obligations under the loan documents; the accuracy and completeness of all information provided by the borrower in the loan application and with respect to the loan contract, and the existence of any material adverse change since the information was provided; and the existence of any material defaults under other agreements of the borrower;

(i) Representations, warranties, and covenants with respect to environmental matters;

(j) Reports and notices required to be submitted to RUS, including but not limited to: annual financial statements; notice of defaults; notice of litigation; notice of orders or other directives received by the borrower from regulatory authorities; notice of any matter that has resulted in or may result in a material adverse change in the condition or operations of the borrower; and such other information regarding the condition or operations of the borrower as RUS may reasonably require;

(k) Annual written certification that the borrower is in compliance with its loan contract, note, mortgage, and any other agreement with RUS, or if there has been a default in the fulfillment of any obligation under said agreements, specifying each such default and the nature and status thereof;

(l) Requirement that the borrower design and implement rates for utility services to meet certain minimum coverage of interest expense and/or debt service obligations;

(m) Requirement that the borrower maintain and preserve its mortgaged property in compliance with prudent utility practice and all applicable laws, which may include certain specific actions and certifications set forth in the borrower's loan contract or mortgage;

(n) Requirement that the borrower plan, design and construct its electric system according to standards and other requirements established by RUS, and if directed by the Administrator, that the borrower follow RUS planning, design and construction standards and requirements for other utility systems constructed by the borrower;

(o) Limitations on extensions and additions to the borrower's electric system without approval by RUS;

(p) Limitations on contracts and contract amendments that the borrower may enter into without approval by RUS;

(q) Limitations of the transfer of mortgaged property by the borrower;

(r) Limitations on dividends, patronage refunds, and cash distributions paid by the borrower;

(s) Limitations on investments, loans, and guarantees made by the borrower;

(t) Authority of RUS to approve a new general manager and to require that an existing general manager be replaced if the borrower is in default under its mortgage, loan contract, or any other agreements with RUS;

(u) Description of events of default under the loan contract and the remedies available to RUS;

(v) Applicability of state and federal laws;

(w) Severability of the individual provisions of the loan documents;

(x) Matters relating to the assignment of the loan contract;

(y) Requirements relating to federal laws and regulations, including but not limited to the following matters: area coverage for electric service; civil rights and equal employment opportunity; access to buildings and other matters relating to the handicapped; design and construction standards relating to earthquakes; the National Environmental Policy Act of 1969 and other environmental laws and regulations; flood hazard insurance; debarment and suspension from federal assistance programs; and delinquency on federal debt; and

(z) Special requirements applicable to individual loans, and such other provisions as RUS may require to ensure loan repayment and reasonably adequate loan security.

§ 1718.104 Availability of model loan contract.

Single copies of the model loan contract (RUS Informational Publication 1718 C) are available from the Rural Utilities Service, United States Department of Agriculture, Washington, DC 20250–1533. This document may be reproduced.

APPENDIX A TO SUBPART C TO PART 1718—MODEL FORM OF LOAN CONTRACT FOR ELECTRIC DISTRIBUTION BORROWERS

LOAN CONTRACT
TABLE OF CONTENTS
RECITALS
ARTICLE I—DEFINITIONS
ARTICLE II—REPRESENTATIONS AND WARRANTIES
Section 2.1. Representations and Warranties.
ARTICLE III—LOAN
Section 3.1. Advances.

Section 3.2. Interest Rate and Payment.
Section 3.3. Prepayment.
ARTICLE IV—CONDITIONS OF LENDING
Section 4.1. General Conditions.
Section 4.2. Special Conditions.
ARTICLE V—AFFIRMATIVE COVENANTS
Section 5.1. Generally.
Section 5.2. Annual Certificates.
Section 5.3. Simultaneous Prepayment of Contemporaneous Loans.
Section 5.4. Rates to Provide Revenue Sufficient to Meet Coverage Ratios Requirements.
Section 5.5. Depreciation Rates.
Section 5.6. Property Maintenance.
Section 5.7. Financial Books.
Section 5.8. Rights of Inspection.
Section 5.9. Area Coverage.
Section 5.10. Real Property Acquisition.
Section 5.11. ''Buy American'' Requirements.
Section 5.12. Power Requirements Studies.
Section 5.13. Long Range Engineering Plans and Construction Work Plans.
Section 5.14. Design Standards, Construction Standards, and List of Materials.
Section 5.15. Plans and Specifications.
Section 5.16. Standard Forms of Construction Contracts, and Engineering and Architectural Services Contracts.
Section 5.17. Contract Bidding Requirements.
Section 5.18. Nondiscrimination.
Section 5.19. Financial Reports.
Section 5.20. Miscellaneous Reports and Notices.
Section 5.21 Special Construction Account.
Section 5.22. Additional Affirmative Covenants.
ARTICLE VI—NEGATIVE COVENANTS
Section 6.1. General.
Section 6.2. Limitations on System Extensions and Additions.
Section 6.3. Limitations on Changing Principal Place of Business.
Section 6.4. Limitations on Employment and Retention of Manager.
Section 6.5. Limitations on Certain Types of Contracts.
Section 6.6. Limitations on Mergers and Sale, Lease or Transfer of Capital Assets.
Section 6.7. Limitations on Using non FDIC-insured Depositories.
Section 6.8. Limitation on Distributions.
Section 6.9. Limitations on Loans, Investments and Other Obligations.
Section 6.10. Depreciation Rates.
Section 6.11. Historic Preservation.
Section 6.12. Rate Reductions.
Section 6.13. Limitations on Additional Indebtedness.
Section 6.14. Limitations on Issuing Additional Indebtedness Secured Under the Mortgage.
Section 6.15. Impairment of Contracts Pledged to RUS.
Section 6.16. Additional Negative Covenants.
ARTICLE VII—DEFAULT
Section 7.1. Events of Default.
ARTICLE VIII—REMEDIES
Section 8.1. Generally.
Section 8.2. Suspension of Advances.
ARTICLE IX—MISCELLANEOUS
Section 9.1. Notices.
Section 9.2. Expenses.
Section 9.3. Late Payments.
Section 9.4. Filing Fees.
Section 9.5. No Waiver.
Section 9.6. Governing Law.
Section 9.7. Holiday Payments.
Section 9.8. Rescission.
Section 9.9. Successors and Assigns.
Section 9.10. Complete Agreement; Amendments.
Section 9.11. Headings.
Section 9.12. Severability.
Section 9.13. Right of Setoff.
Section 9.14. Schedules and Exhibits.
Section 9.15. Prior Loan Documents.
Section 9.16. Authority of Representatives of RUS.
Section 9.17. Term.
SCHEDULE 1
SCHEDULE 2—Existing Liens
SCHEDULE 3—Additional Contracts
EXHIBIT A—Form of Promissory Note
EXHIBIT B—Equal Opportunity Contract Provisions
EXHIBIT C–1—Manager's Certificate Required Under Loan Contract
Section 6.14 for Additional Notes
Exhibit C–2—Manager's Certificate Required Under Loan Contract
Section 6.14 for Refinancing Notes

LOAN CONTRACT

AGREEMENT, dated _____, 199___, between _____ (''Borrower''), a corporation organized and existing under the laws of the State of _____ (the ''State'') and the UNITED STATES OF AMERICA acting by and through the Administrator of the Rural Utilities Service (''RUS'').

RECITALS

The Borrower has applied to RUS for a loan for the purpose(s) set forth in Schedule 1 hereto.

RUS is willing to make such a loan to the Borrower pursuant to the Rural Electrification Act of 1936, as amended, on the terms and conditions stated herein.

THEREFORE, for and in consideration of the premises and the mutual covenants hereinafter contained, the parties hereto agree and bind themselves as follows:

ARTICLE I—DEFINITIONS

Capitalized terms that are not defined herein shall have the meanings as set forth

in the Mortgage. The terms defined herein include the plural as well as the singular and the singular as well as the plural.

''Act'' shall mean the Rural Electrification Act of 1936, as amended.

''Advance'' or ''Advances'' shall mean advances by RUS to Borrower pursuant to the terms and conditions of this Agreement.

''Agreement'' shall mean this Loan Contract together with all schedules and exhibits and also any subsequent supplements or amendments.

''Business Day'' shall mean any day that RUS is open for business.

''Contemporaneous Loan'' shall mean any loan which the Borrower has used to satisfy RUS Regulations or loan conditions requiring that supplemental financing be obtained in order to obtain a loan from RUS. Any loan used to refinance or refund a Contemporaneous Loan is also considered to be a Contemporaneous Loan.

''Coverage Ratios'' shall mean, collectively, the following financial ratios: (i) TIER of 1.5; (ii) Operating TIER of 1.1; (iii) DSC of 1.25; and Operating DSC of 1.1.

''Debt Service Coverage Ratio'' (''DSC'') shall have the meaning provided in the Mortgage.

''Distributions'' shall mean for the Borrower to, in any calendar year, declare or pay any dividends, or pay or determine to pay any patronage refunds, or retire any patronage capital or make any other Cash Distributions, to its members, stockholders or consumers; provided, however, that for the purposes of this Agreement a ''Cash Distribution'' shall be deemed to include any general cancellation or abatement of charges for electric energy or services furnished by the Borrower, but not the repayment of a membership fee upon termination of a membership or the rebate of an abatement of wholesale power costs previously incurred pursuant to an order of a state regulatory authority or a wholesale power cost adjustment clause or similar power pricing agreement between the Borrower and a power supplier.

''Electric System'' shall have the meaning as defined in the Mortgage.

''Equity'' shall mean the Borrower's total margins and equities computed pursuant to RUS Accounting Requirements but excluding any Regulatory Created Assets.

''Event of Default'' shall have the meaning as defined in Section [7.1].

''Independent'' when used with respect to any specified person or entity means such a person or entity who (1) is in fact independent, (2) does not have any direct financial interest or any material indirect financial interest in the Borrower or in any affiliate of the Borrower and (3) is not connected with the Borrower as an officer, employee, promoter, underwriter, trustee, partner, director or person performing similar functions.

''Interest Expense'' shall mean the interest expense of the Borrower computed pursuant to RUS Accounting Requirements.

''Loan'' shall mean the loan described in Article III which is being made pursuant to the RUS Commitment in furtherance of the objectives of the Act.

''Loan Documents'' shall mean, collectively, this Agreement, the Mortgage and the Note.

''Long-Term Debt'' shall mean the total of all amounts included in the long-term debt of the Borrower pursuant to RUS Accounting Requirements.

''Maturity Date'' shall have the meaning as defined in the Note.

''Monthly Payment Date'' shall have the meaning as defined in the Note.

''Mortgage'' shall have the meaning as described in Schedule 1 hereto.

''Mortgaged Property'' shall have the meaning as defined in the Mortgage.

''Net Utility Plant'' shall mean the amount constituting the Total Utility Plant of the Borrower, less depreciation, computed in accordance with RUS Accounting Requirements.

''Note'' shall mean a promissory note executed by the Borrower in the form of exhibit A hereto, and any note executed and delivered to RUS to refund, or in substitution for such a note.

''Operating DSC'' or ''ODSC'' shall mean Operating Debt Service Coverage calculated as:

$$\mathrm{ODSC} = \frac{A + B + C}{D}$$

Where:

All amounts are for the same calendar year and are computed pursuant to RUS Accounting Requirements and RUS form 7;

A=Depreciation and Amortization Expense of the Electric System;

B=Interest Expense on Total Long-Term Debt of the Electric System, except that such Interest Expense shall be increased by ⅓ of the amount, if any, by which the Restricted Rentals of the Electric System exceed 2 percent of the Mortgagor's Equity;

C=Patronage capital & operating margins of the Electric System, (which equals operating revenue and patronage capital of Electric System operations, less total cost of electric service, including Interest Expense on Total Long-Term Debt of the Electric System) plus cash received from the retirement of patronage capital by suppliers of electric power and by lenders for credit extended for the Electric System; and

D=Debt service billed which equals the sum of all payments of principal and interest required to be made on account of Total Long-Term Debt of the Electric System during the calendar year, plus ⅓ of the amount, if any, by which Restricted Rentals of the

Electric System exceed 2 percent of the Mortgagor's Equity.

''Operating TIER'' or ''OTIER'' shall mean Operating Times Interest Earned Ratio calculated as:

$$\text{OTIER} = \frac{A + B}{A}$$

Where:

All amounts are for the same calendar year and are computed pursuant to RUS Accounting Requirements and RUS form 7;

A=Interest Expense on Total Long-Term Debt of the Electric System, except that such Interest Expense shall be increased by 1/3 of the amount, if any, by which Restricted Rentals of the Electric System exceed 2 percent of the Mortgagor's Equity; and

B=Patronage capital & operating margins of the Electric System, (which equals operating revenue and patronage capital of Electric System operations, less total cost of electric service, including Interest Expense on Total Long-Term Debt of the Electric System) plus cash received from the retirement of patronage capital by suppliers of electric power and by lenders for credit extended for the Electric System.

''Payment Notice'' shall mean a notice furnished by RUS to Borrower that indicates the precise amount of each payment of principal and interest and the total amount of each payment.

''Permitted Debt'' shall have the meaning as defined in section [6.13].

''Prior Loan Contracts'' shall have the meaning as defined in section 9.15.

''Regulatory Created Assets'' shall mean the sum of any amounts properly recordable as unrecovered plant and regulatory study costs or as other regulatory assets, computed pursuant to RUS Accounting Requirements.

''RUS Accounting Requirements'' shall mean any system of accounts prescribed by RUS Regulations as such RUS Accounting Requirements exist at the date of applicability thereof.

''RUS Commitment'' shall have the meaning as defined in schedule 1 hereto.

''RUS Regulations'' shall mean regulations of general applicability published by RUS from time to time as they exist at the date of applicability thereof, and shall also include any regulations of other Federal entities which RUS is required by law to implement.

''Special Construction Account'' shall have the meaning as defined in section 5.21.

''Subsidiary'' shall mean a corporation that is a subsidiary of the Borrower and subject to the Borrower's control, as defined by RUS Accounting Requirements.

''Termination Date'' shall have the meaning as defined in the Note.

''Times Interest Earned Ratio'' (''TIER'') shall have the meaning provided in the Mortgage.

''Total Assets'' shall mean an amount constituting the total assets of the Borrower as computed pursuant to RUS Accounting Requirements, but excluding any Regulatory Created Assets.

''Total Utility Plant'' shall mean the amount constituting the total utility plant of the Borrower computed in accordance with RUS Accounting Requirements.

''Utility System'' shall have the meaning as defined in the Mortgage.

ARTICLE II—REPRESENTATIONS AND WARRANTIES

Section 2.1. Representations and Warranties.

To induce RUS to make the Loan, and recognizing that RUS is relying hereon, the Borrower represents and warrants as follows:

(a) *Organization; Power, Etc.* The Borrower: (i) is duly organized, validly existing, and in good standing under the laws of its state of incorporation; (ii) is duly qualified to do business and is in good standing in each jurisdiction in which the transaction of its business makes such qualification necessary; (iii) has all requisite corporate and legal power to own and operate its assets and to carry on its business and to enter into and perform the Loan Documents; (iv) has duly and lawfully obtained and maintained all licenses, certificates, permits, authorizations, approvals, and the like which are material to the conduct of its business or which may be otherwise required by law; and (v) is eligible to borrow from RUS.

(b) *Authority.* The execution, delivery and performance by the Borrower of this Agreement and the other Loan Documents and the performance of the transactions contemplated thereby have been duly authorized by all necessary corporate action and shall not violate any provision of law or of the Articles of Incorporation or By-Laws of the Borrower or result in a breach of, or constitute a default under, any agreement, indenture or other instrument to which the Borrower is a party or by which it may be bound.

(c) *Consents.* No consent, permission, authorization, order, or license of any governmental authority is necessary in connection with the execution, delivery, performance, or enforcement of the Loan Documents, except (i) such as have been obtained and are in full force and effect and (ii) such as have been disclosed on Schedule 1 hereto.

(d) *Binding Agreement.* Each of the Loan Documents is, or when executed and delivered shall be, the legal, valid, and binding obligation of the Borrower, enforceable in accordance with its terms, subject only to

limitations on enforceability imposed by applicable bankruptcy, insolvency, reorganization, moratorium, or similar laws affecting creditors' rights generally.

(e) *Compliance With Laws.* The Borrower is in compliance in all material respects with all federal, state, and local laws, rules, regulations, ordinances, codes, and orders (collectively, ''Laws''), the failure to comply with which could have a material adverse effect on the condition, financial or otherwise, operations, properties, or business of the Borrower, or on the ability of the Borrower to perform its obligations under the Loan Documents, except as the Borrower has disclosed on Schedule 1 attached hereto.

(f) *Litigation.* There are no pending legal, arbitration, or governmental actions or proceedings to which the Borrower is a party or to which any of its property is subject which, if adversely determined, could have a material adverse effect on the condition, financial or otherwise, operations, properties, profits or business of the Borrower, or on the ability of the Borrower to perform its obligations under the Loan Documents, and to the best of the Borrower's knowledge, no such actions or proceedings are threatened or contemplated, except as the Borrower has disclosed to RUS in writing.

(g) *Title to Property.* As to property which is presently included in the description of Mortgaged Property, the Borrower holds good and marketable title to all of its real property and owns all of its personal property free and clear of any Lien except the Liens specifically identified on Schedule 2 attached hereto (the ''Existing Liens''), and Permitted Encumbrances or Liens permitted under the Mortgage.

(h) *Financial Statements; No Material Adverse Change; Etc.* All financial statements submitted to RUS in connection with the application for the Loan or in connection with this Agreement fairly and fully present the financial condition of the Borrower and the results of the Borrower's operations for the periods covered thereby and are prepared in accordance with RUS Accounting Requirements consistently applied. Since the dates thereof, there has been no material adverse change in the financial condition or operations of the Borrower. All budgets, projections, feasibility studies, and other documentation submitted by the Borrower to RUS are based upon assumptions that are reasonable and realistic, and as of the date hereof, no fact has come to light, and no event or transaction has occurred, which would cause any assumption made therein not to be reasonable or realistic.

(i) *Principal Place of Business; Records.* The principal place of business and chief executive office of the Borrower is at the address of the Borrower shown on Schedule 1 attached hereto.

(j) *Location of Properties.* All property owned by the Borrower is located in the counties identified in Schedule 1 hereto.

(k) *Subsidiaries.* The Borrower has no subsidiary, except as the Borrower has disclosed to RUS in writing.

(l) *Defaults Under Other Agreements.* The Borrower is not in default under any agreement or instrument to which it is a party or under which any of its properties are subject that is material to its financial condition, operations, properties, profits, or business.

(m) *Survival.* All representations and warranties made by the Borrower herein or made in any certificate delivered pursuant hereto shall survive the making of the Advances and the execution and delivery to RUS of the Note.

ARTICLE III—LOAN

Section 3.1. Advances

RUS agrees to make, and the Borrower agrees to request, on the terms and conditions of this Agreement, Advances from time to time in an aggregate principal amount not to exceed the RUS Commitment. On the Termination Date, RUS may stop advancing funds and limit the RUS Commitment to the amount advanced prior to such date. The obligation of the Borrower to repay the Advances shall be evidenced by the Note in the principal amount of the unpaid principal amount of the Advances from time to time outstanding. The Borrower shall give RUS written notice of the date on which each Advance is to be made.

Section 3.2. Interest Rate and Payment

The Note shall be payable and bear interest as follows:

(a) *Payments and Amortization.* Principal shall be amortized in accordance with the method stated in Schedule 1 hereto and more fully described in the form of Note attached hereto as Exhibit A.

(b) *Application of Payments.* All payments which the Borrower sends to RUS on any outstanding obligation owed to RUS shall be applied in the manner provided in the Borrower's loan documents to which such payments relate and in a manner consistent with RUS policies, practices, and procedures for obligations that have been similarly classified by RUS.

(c) *Electronic Funds Transfer.* Except as otherwise prescribed by RUS, the Borrower shall make all payments on the Note utilizing electronic funds transfer procedures as specified by RUS.

(d) *Fixed or Variable Rate.* The Note shall bear interest at either a fixed or variable rate in accordance with the method stated in Schedule 1 hereto and as more particularly described in the form of Note attached hereto as Exhibit A.

Section 3.3. Prepayment

The Borrower has no right to prepay the Note in whole or in part except such rights, if any, as are expressly provided for in the Note. However, prepayment of the Note (and any penalties) shall be mandatory under Section [5.3] hereof if the Borrower has used a Contemporaneous Loan in order to qualify for the RUS Commitment, and later prepays the Contemporaneous Loan.

ARTICLE IV—CONDITIONS OF LENDING

Section 4.1. General Conditions

The obligation of RUS to make any Advance hereunder is subject to satisfaction of each of the following conditions precedent on or before the date of such Advance:

(a) *Legal Matters.* All legal matters incident to the consummation of the transactions hereby contemplated shall be satisfactory to counsel for RUS.

(b) *Loan Documents.* That RUS receive duly executed originals of this Agreement and the other Loan Documents.

(c) *Authorization.* That RUS receive evidence satisfactory to it that all corporate documents and proceedings of the Borrower necessary for duly authorizing the execution, delivery and performance of the Loan Documents have been obtained and are in full force and effect.

(d) *Approvals.* That RUS receive evidence satisfactory to it that all consents and approvals (including without limitation the consents referred to in Section [2.1(c)] of this Agreement) which are necessary for, or required as a condition of, the validity and enforceability of each of the Loan Documents have been obtained and are in full force and effect.

(e) *Event of Default.* That no Event of Default specified in Article VII and no event which, with the lapse of time or the notice and lapse of time specified in Article VII would become such an Event of Default, shall have occurred and be continuing, or shall have occurred after giving effect to the Advance on the books of the Borrower.

(f) *Continuing Representations and Warranties.* That the representations and warranties of the Borrower contained in this Agreement be true and correct on and as of the date of such Advance as though made on and as of such date.

(g) *Opinion of Counsel.* That RUS receive an opinion of counsel for the Borrower (who shall be acceptable to RUS) in form and content acceptable to RUS.

(h) *Mortgage Filing.* The Mortgage shall have been duly recorded as a mortgage on real property, including after-acquired real property, and duly filed, recorded or indexed as a security interest in personal property, including after acquired personal property, wherever RUS shall have requested, all in accordance with applicable law, and the Borrower shall have caused satisfactory evidence thereof to be furnished to RUS.

(i) *Wholesale Power Contract.* That the Borrower shall not be in default under the terms of, or contesting the validity of, any contract for sales for resale that has been pledged by any entity to RUS as security for the repayment of any loan made or guaranteed by RUS under the Act.

(j) *Material Adverse Change.* That there has occurred no material adverse change in the business or condition, financial or otherwise, of the Borrower and nothing has occurred which in the opinion of RUS materially and adversely affects the Borrower's ability to meet its obligations hereunder.

(k) *Requisitions.* That the Borrower shall requisition all Advances by submitting its requisition to RUS in form and substance satisfactory to RUS. Requisitions shall be made only for the purpose(s) set forth herein. The Borrower agrees to apply the proceeds of the Advances in accordance with its loan application with such modifications as may be mutually agreed.

(l) *Flood Insurance.* That for any Advance used in whole or in part to finance the construction or acquisition of any building in any area identified by the Secretary of Housing and Urban Development pursuant to the Flood Disaster Protection Act of 1973 (the ''Flood Insurance Act'') or any rules, regulations or orders issued to implement the Flood Insurance Act (''Rules'') as any area having special flood hazards, or to finance any facilities or materials to be located in any such building, or in any building owned or occupied by the Borrower and located in such a flood hazard area, the Borrower has submitted evidence, in form and substance satisfactory to RUS, or RUS has otherwise determined, that (i) the community in which such area is located is then participating in the national flood insurance program, as required by the Flood Insurance Act and any Rules, and (ii) the Borrower has obtained flood insurance coverage with respect to such building and contents as may then be required pursuant to the Flood Insurance Act and any Rules.

(m) *Compliance With Loan Contract and Mortgage.* That the Borrower is in material compliance with all provisions of this Agreement and the Mortgage.

Section 4.2. Special Conditions

The obligation of RUS to make any Advance hereunder is also subject to satisfaction, on or before the date of such Advance, of each of the special conditions, if any, listed in Schedule 1 hereto.

ARTICLE V—AFFIRMATIVE COVENANTS

Section 5.1. Generally

Unless otherwise agreed to in writing by RUS, while this Agreement is in effect, whether or not any Advance is outstanding, the Borrower agrees to duly observe each of the affirmative covenants contained in this Article:

Section 5.2. Annual Certificates

(a) *Performance Under Loan Documents.* The Borrower shall duly observe and perform all of its obligations under each of the Loan Documents.

(b) *Annual Certification.* Within ninety (90) days after the close of each calendar year, commencing with the year following the year in which the initial Advance hereunder shall have been made, the Borrower shall deliver to RUS a written statement signed by its General Manager, stating that during such year the Borrower has fulfilled all of its obligations under the Loan Documents throughout such year in all material respects or, if there has been a default in the fulfillment of any such obligations, specifying each such default known to said person and the nature and status thereof.

Section 5.3. Simultaneous Prepayment of Contemporaneous Loans

If the Borrower shall at any time prepay in whole or in part the Contemporaneous Loan described on Schedule 1, the Borrower shall prepay the RUS Note correspondingly in order to maintain the ratio that the Contemporaneous Loan bears to the RUS Commitment. If the RUS Note calls for a prepayment penalty or premium, such amount shall be paid but shall not be used in computing the amount needed to be paid to RUS under this section to maintain such ratio. In the case of Contemporaneous Loans and RUS Notes existing prior to the date of this Agreement under previous agreements, prepayments shall be treated as if governed by this section. Provided, however, in all cases prepayments associated with refinancing or refunding a Contemporaneous Loan pursuant to Article II of the Mortgage are not considered to be prepayments for purposes of this Agreement if they satisfy each of the following requirements:

(a) *Principal.* The principal amount of such refinancing or refunding loan is not less than the amount of loan principal being refinanced; and

(b) *Weighted Average Life.* The weighted average life of the refinancing or refunding loan is materially equal to the weighted average remaining life of the loan being refinanced.

Section 5.4 Rates to Provide Revenue Sufficient to Meet Coverage Ratios Requirements

(a) *Prospective Requirement.* The Borrower shall design and implement rates for utility service furnished by it to provide sufficient revenue (along with other revenue available to the Borrower in the case of TIER and DSC) (i) to pay all fixed and variable expenses when and as due, (ii) to provide and maintain reasonable working capital, and (iii) to maintain, on an annual basis, the Coverage Ratios. In designing and implementing rates under this paragraph, such rates should be capable of producing at least enough revenue to meet the requirements of this paragraph under the assumption that average weather conditions in the Borrower's service territory shall prevail in the future, including average Utility System damage and outages due to weather and the related costs.

(b) *Retrospective Requirement.* The average Coverage Ratios achieved by the Borrower in the 2 best years out of the 3 most recent calendar years must be not less than any of the following:

TIER=1.5
DSC=1.25
OTIER=1.1
ODSC=1.1

(c) *Prospective Notice of Change in Rates.* The Borrower shall give thirty (30) days prior written notice of any proposed change in its general rate structure to RUS if RUS has requested in writing that it be notified in advance of such changes.

(d) *Routine Reporting of Coverage Ratios.* Promptly following the end of each calendar year, the Borrower shall report, in writing, to RUS the TIER, Operating TIER, DSC and Operating DSC levels which were achieved during that calendar year.

(e) *Reporting Non-achievement of Retrospective Requirement.* If the Borrower fails to achieve the average levels required by paragraph (b) of this section, it must promptly notify RUS in writing to that effect.

(f) *Corrective Plans.* Within 30 days of sending a notice to RUS under paragraph (e) of this section, or of being notified by RUS, whichever is earlier, the Borrower in consultation with RUS, shall provide a written plan satisfactory to RUS setting forth the actions that shall be taken to achieve the required Coverage Ratios on a timely basis.

(g) *Noncompliance.* Failure to design and implement rates pursuant to paragraph (a) of this section and failure to develop and implement the plan called for in paragraph (f) of this section shall constitute an Event of Default under this Agreement in the event that REA so notifies the Borrower to that effect under section [7.1(d)] of this Agreement.

Section 5.5. Depreciation Rates

The Borrower shall adopt as its depreciation rates only those which have been previously approved for the Borrower by RUS.

Section 5.6. Property Maintenance

The Borrower shall maintain and preserve its Utility System in compliance in all material respects with the provisions of the Mortgage, RUS Regulations and all applicable laws.

Section 5.7. Financial Books

The Borrower shall at all times keep, and safely preserve, proper books, records and accounts in which full and true entries shall be made of all of the dealings, business and affairs of the Borrower and its Subsidiaries, in accordance with any applicable RUS Accounting Requirements.

Section 5.8. Rights of Inspection

The Borrower shall afford RUS, through its representatives, reasonable opportunity, at all times during business hours and upon prior notice, to have access to and the right to inspect the Utility System, any other property encumbered by the Mortgage, and any or all books, records, accounts, invoices, contracts, leases, payrolls, canceled checks, statements and other documents and papers of every kind belonging to or in the possession of the Borrower or in anyway pertaining to its property or business, including its Subsidiaries, if any, and to make copies or extracts therefrom.

Section 5.9. Area Coverage

(a) The Borrower shall make diligent effort to extend electric service to all unserved persons within the service area of the Borrower who (i) desire such service and (ii) meet all reasonable requirements established by the Borrower as a condition of such service.

(b) If economically feasible and reasonable considering the cost of providing such service and/or the effects on consumers' rates, such service shall be provided, to the maximum extent practicable, at the rates and minimum charges established in the Borrower's rate schedules, without the payment of such persons, other than seasonal or temporary consumers, of a contribution in aid of construction. A seasonal consumer is one that demands electric service only during certain seasons of the year. A temporary consumer is a seasonal or year-round consumer that demands electric service over a period of less than five years.

(c) The Borrower may assess contributions in aid of construction provided such assessments are consistent with this section.

Section 5.10. Real Property Acquisition

In acquiring real property, the Borrower shall comply in all material respects with the provisions of the Uniform Relocation Assistance and Real Property Acquisition Policies Act of 1970 (the ''Uniform Act''), as amended by the Uniform Relocation Act Amendments of 1987, and 49 CFR part 24, referenced by 7 CFR part 21, to the extent the Uniform Act is applicable to such acquisition.

Section 5.11. ''Buy American'' Requirements

The Borrower shall use or cause to be used in connection with the expenditures of funds advanced on account of the Loan only such unmanufactured articles, materials, and supplies as have been mined or produced in the United States or any eligible country, and only such manufactured articles, materials, and supplies as have been manufactured in the United States or any eligible country substantially all from articles, materials, and supplies mined, produced or manufactured, as the case may be, in the United States or any eligible country, except to the extent RUS shall determine that such use shall be impracticable or that the cost thereof shall be unreasonable. For purposes of this section, an ''eligible country'' is any country that applies with respect to the United States an agreement ensuring reciprocal access for United States products and services and United States suppliers to the markets of that country, as determined by the United States Trade Representative.

Section 5.12. Power Requirements Studies

The Borrower shall prepare and use power requirements studies of its electric loads and future energy and capacity requirements in conformance with RUS Regulations.

Section 5.13. Long Range Engineering Plans and Construction Work Plans

The Borrower shall develop, maintain and use up-to-date long-range engineering plans and construction work plans in conformance with RUS Regulations.

Section 5.14. Design Standards, Construction Standards, and List of Materials

The Borrower shall use design standards, construction standards, and lists of acceptable materials in conformance with RUS Regulations.

Section 5.15. Plans and Specifications

The Borrower shall submit plans and specifications for construction to RUS for review and approval, in conformance with RUS Regulations, if the construction will be financed in whole or in part by a loan made or guaranteed by RUS.

Section 5.16. Standard Forms of Construction Contracts, and Engineering and Architectural Services Contracts

The Borrower shall use the standard forms of contracts promulgated by RUS for construction, procurement, engineering services and architectural services in conformance with RUS Regulations, if the construction, procurement, or services are being financed in whole or in part by a loan being made or guaranteed by RUS.

Section 5.17. Contract Bidding Requirements

The Borrower shall follow RUS contract bidding procedures in conformance with RUS Regulations when contracting for construction or procurement financed in whole or in part by a loan made or guaranteed by RUS.

Section 5.18. Nondiscrimination

(a) *Equal Opportunity Provisions in Construction Contracts.* The Borrower shall incorporate or cause to be incorporated into any construction contract, as defined in Executive Order 11246 of September 24, 1965 and implementing regulations, which is paid for in whole or in part with funds obtained from RUS or borrowed on the credit of the United States pursuant to a grant, contract, loan, insurance or guarantee, or undertaken pursuant to any RUS program involving such grant, contract, loan, insurance or guarantee, the equal opportunity provisions set forth in Exhibit B hereto entitled Equal Opportunity Contract Provisions.

(b) *Equal Opportunity Contract Provisions Also Bind the Borrower.* The Borrower further agrees that it shall be bound by such equal opportunity clause in any federally assisted construction work which it performs itself other than through the permanent work force directly employed by an agency of government.

(c) *Sanctions and Penalties.* The Borrower agrees that it shall cooperate actively with RUS and the Secretary of Labor in obtaining the compliance of contractors and subcontractors with the equal opportunity clause and the rules, regulations and relevant orders of the Secretary of Labor, that it shall furnish RUS and the Secretary of Labor such information as they may require for the supervision of such compliance, and that it shall otherwise assist the administering agency in the discharge of RUS's primary responsibility for securing compliance. The Borrower further agrees that it shall refrain from entering into any contract or contract modification subject to Executive Order 11246 with a contractor debarred from, or who has not demonstrated eligibility for, Government contracts and federally assisted construction contracts pursuant to Part II, Subpart D of Executive Order 11246 and shall carry out such sanctions and penalties for violation of the equal opportunity clause as may be imposed upon contractors and subcontractors by RUS or the Secretary of Labor pursuant to Part II, Subpart D of Executive Order 11246. In addition, the Borrower agrees that if it fails or refuses to comply with these undertakings RUS may cancel, terminate or suspend in whole or in part this contract, may refrain from extending any further assistance under any of its programs subject to Executive Order 11246 until satisfactory assurance of future compliance has been received from such Borrower, or may refer the case to the Department of Justice for appropriate legal proceedings.

Section 5.19. Financial Reports

The Borrower shall cause to be prepared and furnished to RUS a full and complete annual report of its financial condition and of its operations in form and substance satisfactory to RUS, audited and certified by Independent certified public accountants satisfactory to RUS and accompanied by a report of such audit in form and substance satisfactory to RUS. The Borrower shall also furnish to RUS from time to time such other reports concerning the financial condition or operations of the Borrower, including its Subsidiaries, as RUS may reasonably request or RUS Regulations require.

Section 5.20. Miscellaneous Reports and Notices

The Borrower shall furnish to RUS:

(a) *Notice of Default.* Promptly after becoming aware thereof, notice of: (i) the occurrence of any default; and (ii) the receipt of any notice given pursuant to the Mortgage with respect to the occurrence of any event which with the giving of notice or the passage of time, or both, could become an ''Event of Default'' under the Mortgage.

(b) *Notice of Non-Environmental Litigation.* Promptly after the commencement thereof, notice of the commencement of all actions, suits or proceedings before any court, arbitrator, or governmental department, commission, board, bureau, agency, or instrumentality affecting the Borrower which, if adversely determined, could have a material adverse effect on the condition, financial or otherwise, operations, properties or business of the Borrower, or on the ability of the Borrower to perform its obligations under the Loan Documents.

(c) *Notice of Environmental Litigation.* Without limiting the provisions of Section [5.20(b)] above, promptly after receipt thereof, notice of the receipt of all pleadings, orders, complaints, indictments, or other communications alleging a condition that may require the Borrower to undertake or to contribute to a cleanup or other response under laws relating to environmental protection, or which seek penalties, damages, injunctive

relief, or criminal sanctions related to alleged violations of such laws, or which claim personal injury or property damage to any person as a result of environmental factors or conditions for which the Borrower is not fully covered by insurance, or which, if adversely determined, could have a material adverse effect on the condition, financial or otherwise, operations, properties or business of the Borrower, or on the ability of the Borrower to perform its obligations under the Loan Documents.

(d) *Notice of Change of Place of Business.* Promptly in writing, notice of any change in location of its principal place of business or the office where its records concerning accounts and contract rights are kept.

(e) *Regulatory and Other Notices.* Promptly after receipt thereof, copies of any notices or other communications received from any governmental authority with respect to any matter or proceeding which could have a material adverse effect on the condition, financial or otherwise, operations, properties, or business of the Borrower, or on the ability of the Borrower to perform its obligations under the Loan Documents.

(f) *Material Adverse Change.* Promptly, notice of any matter which has resulted or may result in a material adverse change in the condition, financial or otherwise, operations, properties, or business of the Borrower, or the ability of the Borrower to perform its obligations under the Loan Documents.

(g) *Other Information.* Such other information regarding the condition, financial or otherwise, or operations of the Borrower as RUS may, from time to time, reasonably request.

Section 5.21. Special Construction Account

The Borrower shall hold all moneys advanced to it by RUS hereunder in trust for RUS and shall deposit such moneys promptly after the receipt thereof in a bank or banks which meet the requirements of Section [6.7] of this Agreement. Any account (hereinafter called ''Special Construction Account'') in which any such moneys shall be deposited shall be insured by the Federal Deposit Insurance Corporation or other federal agency acceptable to RUS and shall be designated by the corporate name of the Borrower followed by the words ''Trustee, Special Construction Account.'' Moneys in any Special Construction Account shall be used solely for the construction and operation of the Utility System and may be withdrawn only upon checks, drafts, or orders signed on behalf of the Borrower and countersigned by an executive officer thereof.

Section 5.22. Additional Affirmative Covenants

The Borrower also agrees to comply with any additional affirmative covenant(s) identified in Schedule 1 hereto.

ARTICLE VI—NEGATIVE COVENANTS

Section 6.1. General

Unless otherwise agreed to in writing by RUS, while this Agreement is in effect, whether or not any Advance is outstanding hereunder, the Borrower shall duly observe each of the negative covenants set forth in this Article.

Section 6.2. Limitations on System Extensions and Additions

(a) The Borrower shall not extend or add to its Electric System either by construction or acquisition without the prior written approval of RUS if the construction or acquisition is financed or will be financed, in whole or in part, by a RUS loan or loan guarantee.

(b) The Borrower shall not extend or add to its Electric System with funds from other sources without prior written approval of RUS in the case of:

(1) Generating facilities if the combined capacity of the facilities to be built, procured, or leased, including any future facilities included in the planned project, will exceed the lesser of 5 Megawatts or 30 percent of the Borrower's Equity;

(2) Existing electric facilities or systems in service whose purchase price, or capitalized value in the case of a lease, exceeds ten percent of the Borrower's Net Utility Plant; and

(3) Any project to serve a customer whose annual Kwh purchases or maximum annual Kw demand is projected to exceed 25 percent of the Borrower's total Kwh sales or maximum Kw demand in the year immediately preceding the acquisition or start of construction of facilities.

Section 6.3. Limitations on Changing Principal Place of Business

The Borrower shall not change its principal place of business or keep property in a county not shown on a schedule to the Mortgage if the change would cause the lien in favor of RUS to become unperfected or fail to become perfected, as the case may be, unless, prior thereto, the Borrower shall have taken all steps required by law in order to assure that the lien in favor of RUS remains or becomes perfected, as the case may be, and, in either event, such lien has the priority accorded by the Mortgage.

Section 6.4. Limitations on Employment and Retention of Manager

At any time any Event of Default, or any occurrence which with the passage of time or giving of notice would be an Event of Default, occurs and is continuing the Borrower shall not employ any general manager of the Utility System or the Electric System or any person exercising comparable authority to such a manager unless such employment shall first have been approved by RUS. If any

Event of Default, or any occurrence which with the passage of time or giving of notice would be an Event of Default, occurs and is continuing and RUS requests the Borrower to terminate the employment of any such manager or person exercising comparable authority, or RUS requests the Borrower to terminate any contract for operating the Utility System or the Electric System, the Borrower shall do so within thirty (30) days after the date of such notice. All contracts in respect of the employment of any such manager or person exercising comparable authority, or for the operation of the Utility System or the Electric System, shall contain provisions to permit compliance with the foregoing covenants.

Section 6.5. Limitations on Certain Types of Contracts

Without the prior approval of RUS in writing, the Borrower shall not enter into any of the following contracts:

(a) *Construction Contracts.* Any contract for construction or procurement or for architectural and engineering services in connection with its Electric System if the project is financed or will be financed, in whole or in part, by a RUS loan or loan guarantee;

(b) *Large retail power contracts.* Any contract to sell electric power and energy for periods exceeding two (2) years if the kWh sales or kW demand for any year covered by such contract shall exceed 25 percent of the Borrower's total kWh sales or maximum kW demand for the year immediately preceding the execution of such contract;

(c) *Wholesale power contracts.* Any contract to sell electric power or energy for resale and any contract to purchase electric power or energy that, in either case, has a term exceeding two (2) years;

(d) *Power supply arrangements.* Any interconnection agreement, interchange agreement, wheeling agreement, pooling agreement or similar power supply arrangement that has a term exceeding two (2) years;

(e) *System management and maintenance contracts.* Any contract for the management and operation of all or substantially all of its Electric System; or

(f) *Other contracts.* Any contracts of the type described on Schedule 3.

Section 6.6. Limitations on Mergers and Sale, Lease or Transfer of Capital Assets

(a) The Borrower shall not consolidate with, or merge, or sell all or substantially all of its business or assets, to another entity or person except to the extent it is permitted to do so under the Mortgage. The exception contained in this paragraph (a) is subject to the additional limitation set forth in paragraph (b) of this section.

(b) The Borrower shall not, without the written approval of the Administrator, voluntarily or involuntarily sell, convey or dispose of any portion of its business or assets (including, without limitation, any portion of its franchise or service territory) to another entity or person if such sale, conveyance or disposition could reasonably be expected to reduce the Borrower's existing or future requirements for energy or capacity being furnished to the Borrower under any wholesale power contract which has been pledged as security to RUS.

Section 6.7. Limitations on Using non-FDIC Insured Depositories

Without the prior written approval of RUS, the Borrower shall not place the proceeds of the Loan or any loan which has been made or guaranteed by RUS in the custody of any bank or other depository that is not insured by the Federal Deposit Insurance Corporation or other federal agency acceptable to RUS.

Section 6.8. Limitation on Distributions

Without the prior written approval of RUS, the Borrower shall not in any calendar year make any Distributions (exclusive of any Distributions to the estates of deceased natural patrons) to its members, stockholders or consumers except as follows:

(a) Equity above 30%. If, after giving effect to any such Distribution, the Equity of the Borrower shall be greater than or equal to 30% of its Total Assets; or

(b) Equity above 20%. If, after giving effect to any such Distribution, the aggregate of all Distributions made during the calendar year when added to such Distribution shall be less than or equal to 25% of the prior year's margins.

Provided however, that in no event shall the Borrower make any Distributions if there is unpaid when due any installment of principal of (premium, if any) or interest on its Notes, if the Borrower is otherwise in default hereunder or if, after giving effect to any such Distribution, the Borrower's current and accrued assets would be less than its current and accrued liabilities.

Section 6.9. Limitations on Loans, Investments and Other Obligations

The Borrower shall not make any loan or advance to, or make any investment in, or purchase or make any commitment to purchase any stock, bonds, notes or other securities of, or guaranty, assume or otherwise become obligated or liable with respect to the obligations of, any other person, firm or corporation, except as permitted by the Act and RUS Regulations.

Section 6.10. Depreciation Rates

The Borrower shall not file with or submit for approval of regulatory bodies any proposed depreciation rates which are inconsistent with RUS Regulations.

Section 6.11. Historic Preservation

The Borrower shall not, without approval in writing by RUS, use any Advance to construct any facilities which shall involve any district, site, building, structure or object which is included in, or eligible for inclusion in, the National Register of Historic Places maintained by the Secretary of the Interior pursuant to the Historic Sites Act of 1935 and the National Historic Preservation Act of 1966.

Section 6.12. Rate Reductions

Without the prior written approval of RUS, the Borrower shall not decrease its rates if it has failed to achieve all of the Coverage Ratios for the calendar year prior to such reduction.

Section 6.13. Limitations on Additional Indebtedness

Except as expressly permitted by Article II of the Mortgage and subject to the further limitations expressed in the next section, the Borrower shall not incur, assume, guarantee or otherwise become liable in respect of any debt for borrowed money and Restricted Rentals (including Subordinated Indebtedness) other than the following: (''Permitted Debt'')

(a) Additional Notes issued in compliance with Article II of the Mortgage;

(b) Purchase money indebtedness in non-Utility System property, in an amount not exceeding 10% of Net Utility Plant;

(c) Restricted Rentals in an amount not to exceed 5% of Equity during any 12 consecutive calendar month period;

(d) Unsecured lease obligations incurred in the ordinary course of business except Restricted Rentals;

(e) Unsecured indebtedness for borrowed money, except when the aggregate amount of such indebtedness exceeds 15% of Net Utility Plant and after giving effect to such unsecured indebtedness the Borrower's Equity is less than 30% of its Total Assets;

(f) Debt represented by dividends declared but not paid; and

(g) Subordinated Indebtedness approved by RUS.

PROVIDED, However, that the Borrower may incur Permitted Debt without the consent of RUS only so long as there exists no Event of Default hereunder and there has been no continuing occurrence which with the passage of time and giving of notice could become an Event of Default hereunder.

PROVIDED, FURTHER, by executing this Agreement any consent of RUS that the Borrower would otherwise be required to obtain under this Section is hereby deemed to be given or waived by RUS by operation of law to the extent, but only to the extent, that to impose such a requirement of RUS consent would clearly violate federal laws or RUS Regulations.

Section 6.14. Limitations on Issuing Additional Indebtedness Secured Under the Mortgage

(a) The Borrower shall not issue any Additional Notes under the Mortgage to finance Eligible Property Additions without the prior written consent of RUS unless the following additional requirements are met in addition to the requirements set forth in the Mortgage for issuing Additional Notes:

(1) The weighted average life of the loan evidenced by such Notes does not exceed the weighted average of the expected remaining useful lives of the assets being financed;

(2) The principal of the loan evidenced by such Notes is amortized at a rate that shall yield a weighted average life that is not greater than the weighted average life that would result from level payments of principal and interest; and

(3) The principal of the loan being evidenced by such Notes has a maturity of not less than 5 years.

(b) The Borrower shall not issue any Additional Notes under the Mortgage to refund or refinance Notes without the prior written consent of RUS unless, in addition to the requirements set forth in the Mortgage for issuing Refunding or Refinancing Notes, the weighted average life of any such Refunding or Refinancing Notes is not greater than the weighted average remaining life of the Notes being refinanced.

(c) Any request for consent from RUS under this section, shall be accompanied by a certificate of the Borrower's manager substantially in the form attached to this Agreement as Exhibit C–1 in the case of Notes being issued under Section [2.01] of the Mortgage and C–2 in the case of Notes being issued under Section [2.02] of the Mortgage.

Section 6.15. Impairment of Contracts Pledged to RUS

The Borrower shall not materially breach any obligation to be paid or performed by the Borrower on any contract, or take any action which is likely to materially impair the value of any contract, which has been pledged as security to RUS by the Borrower or any other entity.

Section 6.16. Additional Negative Covenants

The Borrower also agrees to comply with any additional negative covenant(s) identified in Schedule 1 hereto.

ARTICLE VII—DEFAULT

Section 7.1. Events of Default

The following shall be Events of Default under this Agreement:

(a) *Representations and Warranties.* Any representation or warranty made by the Borrower in Article II hereof or any certificate furnished to RUS hereunder or under the Mortgage shall prove to have been incorrect in any material respect at the time made and shall at the time in question be untrue or incorrect in any material respect and remain uncured;

(b) *Payment.* Default shall be made in the payment of or on account of interest on or principal of the Note when and as the same shall be due and payable, whether by acceleration or otherwise, which shall remain unsatisfied for five (5) Business Days;

(c) *Borrowing Under the Mortgage in Violation of the Loan Contract.* Default by the Borrower in the observance or performance of any covenant or agreement contained in Section 6.14 of this Agreement.

(d) *Other Covenants.* Default by the Borrower in the observance or performance of any other covenant or agreement contained in any of the Loan Documents, which shall remain unremedied for 30 calendar days after written notice thereof shall have been given to the Borrower by RUS;

(e) *Corporate Existence.* The Borrower shall forfeit or otherwise be deprived of its corporate charter, franchises, permits, easements, consents or licenses required to carry on any material portion of its business;

(f) *Other Obligations.* Default by the Borrower in the payment of any obligation, whether direct or contingent, for borrowed money or in the performance or observance of the terms of any instrument pursuant to which such obligation was created or securing such obligation;

(g) *Bankruptcy.* A court having jurisdiction in the premises shall enter a decree or order for relief in respect of the Borrower in an involuntary case under any applicable bankruptcy, insolvency or other similar law now or hereafter in effect, or appointing a receiver, liquidator, assignee, custodian, trustee, sequestrator or similar official, or ordering the winding up or liquidation of its affairs, and such decree or order shall remain unstayed and in effect for a period of ninety (90) consecutive days or the Borrower shall commence a voluntary case under any applicable bankruptcy, insolvency or other similar law now or hereafter in effect, or under any such law, or consent to the appointment or taking possession by a receiver, liquidator, assignee, custodian or trustee, of a substantial part of its property, or make any general assignment for the benefit of creditors; and

(h) *Dissolution or Liquidation.* Other than as provided in the immediately preceding subsection, the dissolution or liquidation of the Borrower, or failure by the Borrower promptly to forestall or remove any execution, garnishment or attachment of such consequence as shall impair its ability to continue its business or fulfill its obligations and such execution, garnishment or attachment shall not be vacated within 30 days. The term ''dissolution or liquidation of the Borrower'', as used in this subsection, shall not be construed to include the cessation of the corporate existence of the Borrower resulting either from a merger or consolidation of the Borrower into or with another corporation following a transfer of all or substantially all its assets as an entirety, under the conditions permitting such actions.

ARTICLE VIII—REMEDIES

Section 8.1. Generally

Upon the occurrence of an Event of Default, then RUS may pursue all rights and remedies available to RUS that are contemplated by this Agreement or the Mortgage in the manner, upon the conditions, and with the effect provided in this Agreement or the Mortgage, including, but not limited to, a suit for specific performance, injunctive relief or damages. Nothing herein shall limit the right of RUS to pursue all rights and remedies available to a creditor following the occurrence of an Event of Default listed in Article VII hereof. Each right, power and remedy of RUS shall be cumulative and concurrent, and recourse to one or more rights or remedies shall not constitute a waiver of any other right, power or remedy.

Section 8.2. Suspension of Advances

In addition to the rights, powers and remedies referred to in the immediately preceding section, RUS may, in its absolute discretion, suspend making Advances hereunder if (i) any Event of Default, or any occurrence which with the passage of time or giving of notice would be an Event of Default, occurs and is continuing; (ii) there has occurred a change in the business or condition, financial or otherwise, of the Borrower which in the opinion of RUS materially and adversely affects the Borrower's ability to meet its obligations under the Loan Documents, or (iii) RUS is authorized to do so under RUS Regulations.

ARTICLE IX—MISCELLANEOUS

Section 9.1. Notices

All notices, requests and other communications provided for herein including, without limitation, any modifications of, or waivers, requests or consents under, this Agreement shall be given or made in writing (including, without limitation, by telecopy) and delivered to the intended recipient at

the ''Address for Notices'' specified below; or, as to any party, at such other address as shall be designated by such party in a notice to each other party. Except as otherwise provided in this Agreement, all such communications shall be deemed to have been duly given when transmitted by telecopier or personally delivered or, in the case of a mailed notice, upon receipt, in each case given or addressed as provided for herein. The Address for Notices of the respective parties are as follows:

Rural Utilities Service, United States Department of Agriculture, Washington, DC 20250–1500
Fax: (202) xxx-xxxx
Attention: [Administrator]
The Borrower:
The address set forth in Schedule 1 hereto

Section 9.2. Expenses

To the extent allowed by law, the Borrower shall pay all costs and expenses of RUS, including reasonable fees of counsel, incurred in connection with the enforcement of the Loan Documents or with the preparation for such enforcement if RUS has reasonable grounds to believe that such enforcement may be necessary.

Section 9.3. Late Payments

If payment of any amount due hereunder is not received at the United States Treasury in Washington, DC, or such other location as RUS may designate to the Borrower within five (5) Business Days after the due date thereof or such other time period as RUS may prescribe from time to time in its policies of general application in connection with any late payment charge (such unpaid amount being herein called the ''delinquent amount'', and the period beginning after such due date until payment of the delinquent amount being herein called the ''late-payment period''), the Borrower shall pay to RUS, in addition to all other amounts due under the terms of the Note, the Mortgage and this Agreement, any late-payment charge as may be fixed by RUS Regulations from time to time on the delinquent amount for the late-payment period.

Section 9.4. Filing Fees

To the extent permitted by law, the Borrower agrees to pay all expenses of RUS (including the fees and expenses of its counsel) in connection with the filing or recordation of all financing statements and instruments as may be required by RUS in connection with this Agreement, including, without limitation, all documentary stamps, recordation and transfer taxes and other costs and taxes incident to recordation of any document or instrument in connection herewith. Borrower agrees to save harmless and indemnify RUS from and against any liability resulting from the failure to pay any required documentary stamps, recordation and transfer taxes, recording costs, or any other expenses incurred by RUS in connection with this Agreement. The provisions of this subsection shall survive the execution and delivery of this Agreement and the payment of all other amounts due hereunder or due on the Note.

Section 9.5. No Waiver

No failure on the part of RUS to exercise, and no delay in exercising, any right hereunder shall operate as a waiver thereof nor shall any single or partial exercise by RUS of any right hereunder preclude any other or further exercise thereof or the exercise of any other right.

Section 9.6. Governing Law

EXCEPT TO THE EXTENT GOVERNED BY APPLICABLE FEDERAL LAW, THE LOAN DOCUMENTS SHALL BE DEEMED TO BE GOVERNED BY, AND CONSTRUED IN ACCORDANCE WITH, THE LAWS OF THE STATE [IN WHICH THE BORROWER IS INCORPORATED].

Section 9.7. Holiday Payments

If any payment to be made by the Borrower hereunder shall become due on a day which is not a Business Day, such payment shall be made on the next succeeding Business Day and such extension of time shall be included in computing any interest in respect of such payment.

Section 9.8. Rescission

The Borrower may elect not to borrow the RUS Commitment in which event RUS shall release the Borrower from its obligations hereunder, provided the Borrower complies with such terms and conditions as RUS may impose for such release and provided also that if the Borrower has any remaining obligations to RUS for loans made or guaranteed by RUS under any Prior Loan Contracts, RUS may, under Section [9.15] of this Loan Contract, withhold such release until all such obligations have been satisfied and discharged.

Section 9.9. Successors and Assigns

This Agreement shall be binding upon and inure to the benefit of the Borrower and RUS and their respective successors and assigns, except that the Borrower may not assign or transfer its rights or obligations hereunder without the prior written consent of RUS.

Section 9.10. Complete Agreement; Amendments

Subject to RUS Regulations, this Agreement and the other Loan Documents are intended by the parties to be a complete and final expression of their agreement. However, RUS reserves the right to waive its

rights to compliance with any provision of this Agreement and the other Loan Documents. No amendment, modification, or waiver of any provision hereof or thereof, and no consent to any departure of the Borrower herefrom or therefrom, shall be effective unless approved in writing by RUS in the form of either a RUS Regulation or other writing signed by or on behalf of RUS, and then such waiver or consent shall be effective only in the specific instance and for the specific purpose for which given.

Section 9.11. Headings

The headings and sub-headings contained in the titling of this Agreement are intended to be used for convenience only and do not constitute part of this Agreement.

Section 9.12. Severability

If any term, provision or condition, or any part thereof, of this Agreement or the Mortgage shall for any reason be found or held invalid or unenforceable by any governmental agency or court of competent jurisdiction, such invalidity or unenforceability shall not affect the remainder of such term, provision or condition nor any other term, provision or condition, and this Agreement, the Note, and the Mortgage shall survive and be construed as if such invalid or unenforceable term, provision or condition had not been contained therein.

Section 9.13. Right of Setoff

Upon the occurrence and during the continuance of any Event of Default, RUS is hereby authorized at any time and from time to time, without prior notice to the Borrower, to exercise rights of setoff or recoupment and apply any and all amounts held or hereafter held, by RUS or owed to the Borrower or for the credit or account of the Borrower against any and all of the obligations of the Borrower now or hereafter existing hereunder or under the Note. RUS agrees to notify the Borrower promptly after any such setoff or recoupment and the application thereof, provided that the failure to give such notice shall not affect the validity of such setoff, recoupment or application. The rights of RUS under this section are in addition to any other rights and remedies (including other rights of setoff or recoupment) which RUS may have. Borrower waives all rights of setoff, deduction, recoupment or counterclaim.

Section 9.14. Schedules and Exhibits

Each Schedule and Exhibit attached hereto and referred to herein is each an integral part of this Agreement.

Section 9.15. Prior Loan Contracts

It is understood and agreed that with respect to all loan agreements previously entered into by and between RUS and the Borrower (hereinafter being referred to as ''Prior Loan Contracts'') the Borrower shall be required, after the date hereof, to meet affirmative and negative covenants as set forth in this Agreement rather than those set forth in the Prior Loan Contracts. In addition, any remaining obligation of RUS to make additional advances on promissory notes of the Borrower that have been previously delivered to RUS under Prior Loan Contracts shall, after the date hereof, be subject to the conditions set forth in this Agreement. In the event of any conflict between any provision set forth in a Prior Loan Contract and any provision in this Agreement, the requirements as set forth in this Agreement shall apply. Nothing in this section shall, however, eliminate or modify any special condition, special affirmative covenant or special negative covenant, if any, unless specifically agreed to in writing by RUS.

Section 9.16. Authority of Representatives of RUS

In the case of any consent, approval or waiver from RUS that is required under this Agreement or any other Loan Document, such consent, approval or waiver must be in writing and signed by an authorized RUS representative to be effective. As used in this section, ''authorized RUS representative'' means the Administrator of RUS, and also means a person to whom the Administrator has officially delegated specific or general authority to take the action in question.

Section 9.17. Term

This Agreement shall remain in effect until one of the following two events has occurred:

(a) The Borrower and RUS replace this Agreement with another written agreement; or

(b) All of the Borrower's obligations under the prior loan contracts and this Agreement have been discharged and paid.

IN WITNESS WHEREOF, the parties hereto have caused this Agreement to be duly executed as of the day and year first above written.

_____

(Name of Borrower)

(SEAL)

By _____

President

Attest: _____

Secretary

RURAL UTILITIES SERVICE

By _____

Administrator

SCHEDULE 1

[citations subject to change]

1. The purpose of this loan is _____ and such other purposes that RUS may agree to in writing in order to carry out the purposes of the Rural Electrification Act.

2. The Mortgage shall mean the Restated Mortgage and Security Agreement, dated as of _____, between the Borrower and RUS, as it may have been or shall be supplemented, amended, consolidated, or restated from time to time.

3. The governmental authority referred to in Section [2.1(c)] is _____.

4. The exception being taken to the representations in Section [2.1(e)] concerning material compliance with laws is as follows: _____.

5. The litigation referred to in Section [2.1(f)] is described as follows: _____.

6. The date of the Borrower's financial information referred to in Section [2.1(h)] is _____.

7. The principal place of business of the Borrower referred to in Section [2.1(i)] is _____.

8. All of the property of the Borrower is located in the counties of _____.

9. The subsidiary (or subsidiaries) referred to in Section [2.1(k)] is (are): _____.

10. The Contemporaneous Loan referred to in Section [5.3] is described as follows: _____.

Lender: _____

Amount: _____

Year of Final Maturity: _____

11. The RUS Commitment referred to in the definitions means a loan in the principal amount of $_____ which is being made by RUS to the Borrower at the _____ Hardship Rate _____ Municipal Rate (CHECK ONE) pursuant to the Rural Electrification Act and RUS Regulations.

12. Amortization of Advance shall be based upon the method indicated below:

_____ level principal

_____ level debt service

_____ other

13. The SPECIAL condition(s) referred to in Section [4.2] is (are): _____.

14. The additional AFFIRMATIVE covenant(s) referred to in Section [5.22] is (are) as follows: _____. 15. The additional NEGATIVE covenant(s) referred to in Section [6.16] is (are) as follows: _____.

16. The address of the Borrower referred to in Section [9.1]. is _____.

SCHEDULE 2—EXISTING LIENS

The Existing Liens referred to in Section [2.1(g)] are as follows:

[INSERT DESCRIPTION OF EXISTING LIENS, IF ANY, HERE]

SCHEDULE 3—ADDITIONAL CONTRACTS

The additional contracts referred to in Section [6.5(f)] are described as follows:

[INSERT LIST OF ANY ADDITIONAL CONTRACTS HERE]

EXHIBIT A—FORM OF PROMISSORY NOTE

[INSERT EITHER MUNICIPAL or HARDSHIP RATE PROMISSORY NOTE FORM HERE]

EXHIBIT B—EQUAL OPPORTUNITY CONTRACT PROVISIONS

During the performance of this contract, the contractor agrees as follows:

(a) The contractor shall not discriminate against any employee or applicant for employment because of race, color, religion, sex or national origin. The contractor shall take affirmative action to ensure that applicants are employed, and that employees are treated during employment without regard to their race, color, religion, sex or national origin. Such action shall include, but not be limited to the following: employment, upgrading, demotion or transfer, recruitment or recruitment advertising; layoff or termination; rates of pay or other forms of compensation; and selection for training, including apprenticeship. The contractor agrees to post in conspicuous places, available to employees and applicants for employment, notices to be provided setting forth the provisions of this nondiscrimination clause.

(b) The contractor shall, in all solicitations or advertisements for employees placed by or on behalf of the contractor, state that all qualified applicants shall receive consideration for employment without regard to race, color, religion, sex or national origin.

(c) The contractor shall send to each labor union or representative of workers with which he has a collective bargaining agreement or other contract or understanding, a notice to be provided advising the said labor union or workers' representative of the contractor's commitments under this section, and shall post copies of the notice in conspicuous places available to employees and applicants for employment.

(d) The contractor shall comply with all provisions of Executive Order 11246 of September 24, 1965, and of the rules, regulations and relevant orders of the Secretary of Labor.

(e) The contractor shall furnish all information and reports required by Executive Order 11246 of September 24, 1965, and by the rules, regulations and orders of the Secretary of Labor, or pursuant thereto, and shall permit access to his books, records and accounts by the administering agency and

the Secretary of Labor for purposes of investigation to ascertain compliances with such rules, regulations and orders.

(f) In the event of the contractor's noncompliance with the non-discrimination clauses of this contract or with any of the said rules, regulations or orders, this contract may be cancelled, terminated or suspended in whole or in part and the contractor may be declared ineligible for further Government contracts or federally assisted construction contracts in accordance with procedures authorized in Executive Order 11246 of September 24, 1965, and such other sanctions may be imposed and remedies invoked as provided in said Executive Order or by rule, regulation or order of the Secretary of Labor, or as otherwise provided by law.

(g) The contractor shall include the provisions of paragraphs (a) through (g) in every subcontract or purchase order unless exempted by rules, regulations or orders of the Secretary of Labor issued pursuant to section 204 of Executive Order 11246, dated September 24, 1965, so that such provisions shall be binding upon each subcontractor or vendor. The contractor shall take such action with respect to any subcontract or purchase order as the administering agency may direct as a means of enforcing such provisions, including sanctions for noncompliance: Provided, however, that in the event a contractor becomes involved in, or is threatened with, litigation with a subcontractor or vendor as a result of such direction by the agency, the contractor may request the United States to enter into such litigation to protect the interests of the United States.

EXHIBIT C–1—MANAGER'S CERTIFICATE REQUIRED UNDER LOAN CONTRACT SECTION 6.14 FOR ADDITIONAL NOTES

On behalf on _____ [Name of Borrower] _____ I hereby certify that the Additional Note or Notes to be issued under Section [2.01] of the Mortgage on or about _____ [Date Note or Notes are to be Signed] _____ meet all of the requirements of Section [6.14] of the Loan Contract, namely:

(a) The weighted average life of the loan evidenced by such Notes (_____ years) does not exceed the weighted average of the expected remaining useful lives of the assets being financed (_____ years) as evidenced by the attached calculation of said weighted average lives.

(b) The principal of the loan evidenced by such Notes shall either be [check one and provide evidence in the second case]:

_____ (1) repaid based on level payments of principal and interest throughout the life of the loan, or

_____ (2) amortized at a rate that shall yield a weighted average life that is not greater than the weighted average life that would result from level payments of principal and interest throughout the life of the loan as evidenced by the attached analysis of said weighted average lives.

(c) The principal of the loan evidenced by such Notes has a maturity of not less than 5 years.

[Signed] _____

[Dated] _____

[Name] _____

[Title] _____

[Name and Address of Borrower] _____

_____

_____

EXHIBIT C–2—MANAGER'S CERTIFICATE REQUIRED UNDER LOAN CONTRACT SECTION 6.14 FOR REFINANCING NOTES

On behalf on _____ [Name of Borrower] _____ I hereby certify that the Additional Note or Notes to be issued under Section [2.02] of the Mortgage on or about _____ [Date Note or Notes are to be Signed] _____ meet the requirement of Section [6.14] of the Loan Contract that the weighted average life of such Notes is not greater than the weighted average remaining life of the Notes being refinanced, as evidenced by the attached calculation of said weighted average lives.

[Signed] _____

[Dated] _____

[Name] _____

[Title] _____

[Name and Address of Borrower] _____

_____

_____

PART 1721—POST-LOAN POLICIES AND PROCEDURES FOR INSURED ELECTRIC LOANS

AUTHORITY: 7 U.S.C. 901 *et seq.*; 7 U.S.C. 1921 *et seq.*; Pub. L. 103–354, 108 Stat. 3178 (7 U.S.C. 6941 *et seq.*).

EDITORIAL NOTE: Nomenclature changes to part 1721 appear at 55 FR 39397, Sept. 27, 1990.

Subpart A—Advance of Funds

§1721.1 Advances.

(a) *Purpose and amount.* With the exception of minor construction, insured loan funds will be advanced only for projects which are included in an RUS approved Borrower's construction workplan or approved amendment and in an approved loan, as amended. Loan fund advances can be requested in an

amount representing actual costs incurred but not to exceed 130 percent of the project cost estimate on the approved RUS Form 740c, ''Costs Estimates and Loan Budget for Electric Borrowers,''[1] as amended. Minor construction is defined as a project costing $25,000 or less. Such projects qualify for advance of loan funds even though they may not have been included in an RUS-approved Borrower's construction workplan, amendment to such workplan or approved loan. Total advances requested shall not exceed the total loan amount. All projects for which loan fund advances are requested must be constructed to achieve purposes permitted by terms of the loan contract between the Borrower and RUS.

(b) *Certification*. Pursuant to the applicable provisions of the RUS loan contract, Borrowers shall certify with each request for funds to be approved for advance that such funds are for projects in compliance with this section and shall also provide for those that cost in excess of $25,000 a contract or work order number as applicable and a workplan cross-reference identification.

For a minor project not included in an RUS approved Borrower's construction workplan, the Borrower shall describe the project and do one of the following to satisfy RUS's environmental requirements (see 7 CFR part 1794).

(1) If applicable, state that the project is a categorical exclusion of a type described in 7 CFR 1794.31(b) which normally does not require preparation of a Borrower's Environmental Report (BER); or

(2) If applicable, state that the project is a categorical exclusion of a type that normally requires a BER and then:

(i) Submit the BER with the request for funds to be approved for advance, or

(ii) If applicable, certify that it has analyzed the minor project with respect to a comprehensive service area environmental map and data base collected and used in preparing the BER for its RUS-approved Borrower's construction workplan, and that on the basis of that information the minor project will not be located in an environmentally sensitive area or location.

(c) *Noncompliance.* Where insured loan funds are found to have been advanced in noncompliance with this rule, Borrowers will be required to return the appropriate amount of the over advance together with any accrued and unpaid interest to RUS. The Administrator will require Borrowers, in order to remedy such noncompliance, to pay an additional amount equal to the interest on the funds over advanced for the period such funds were outstanding, calculated at a rate equal to the difference between the RUS loan interest rate and the most recent rate at which RUS sold Certificates of Beneficial Ownership (CBO's). While RUS will generally permit the amount of over advance returned to be requested subsequently by the Borrower for RUS approved projects, nothing herein contained shall be construed to preclude RUS from exercising any rights or remedies which RUS may have pursuant to the loan contract.

[50 FR 5368, Feb. 8, 1985. Redesignated at 55 FR 39395, Sept. 27, 1990]

[1] A copy of these forms and publications may be obtained by writing the Rural Utilities Service, Washington, DC 20250.

Subpart B—[Reserved]

PART 1724—ELECTRIC SYSTEM PLANNING AND DESIGN POLICIES AND PROCEDURES

Subpart A—General [Reserved]

Subpart B—Architectural Services [Reserved]

Subpart C—Engineering Services [Reserved]

Subpart D—Electric System Planning [Reserved]

Subpart E—Electric System Design

Sec.
1724.41 Compliance with National Electrical Safety Code.
1724.42—1724.44 [Reserved]
1724.45 Permitted deviations from RUS construction standards.

AUTHORITY: 7 U.S.C. 901 *et seq.*; 7 U.S.C. 1921 *et seq.*; Pub. L. 103–354, 108 Stat. 3178 (7 U.S.C. 6941 *et seq.*).

EDITORIAL NOTE: Nomenclature change to part 1724 appears at 55 FR 39397, Sept. 27, 1990.

Subpart A—General [Reserved]

Subpart B—Architectural Services [Reserved]

Subpart C—Engineering Services [Reserved]

Subpart D—Electric System Planning [Reserved]

Subpart E—Electric System Design

§ 1724.41 Compliance with National Electrical Safety Code.

(a) All borrowers' new lines and substations shall be constructed and operated in accordance with the requirements of the National Electrical Safety Code (NESC). The applicable edition of the NESC to be followed shall be the latest edition which is effective in accordance with the provisions of that edition. Where local regulations or other RUS requirements are more stringent, those requirements shall govern.

(b) The Administrator of RUS will consider specific requests to approve construction which is not in accordance with the NESC if the borrower provides evidence satisfactory to the Administrator that an exception is necessary or desirable and in the interests of the Government and the borrower.

(c) Overhead distribution circuits shall be constructed with not less than the Grade C strength requirements as described in section 26, Strength Requirements, of the NESC when subjected to the loads specified in NESC section 25, Loadings for Grades B, C, and D. Overhead transmission circuits shall be constructed with not less than the Grade B strength requirements as described in NESC section 26.

[49 FR 11620, Mar. 27, 1984. Redesignated at 55 FR 39395, Sept. 27, 1990]

§§ 1724.42—1724.44 [Reserved]

§ 1724.45 Permitted deviations from RUS construction standards.

(a) *Structures for raptor protection.* Standard distribution line structres may not have the extra measure of protection needed in areas frequented by eagles and other large birds (raptors) to protect such birds from electric shock due to physical contact with energized wires. Borrowers are allowed to deviate from RUS construction standards to provide for raptor protection in the design of overhead line structures in those cases where such protection is required by (1) RUS or (2) a Federal, state or local authority with permit or license authority over the proposed construction. Structures which are designed for raptor protection shall be in accordance with *Suggested Practices for Raptor Protection on Powerlines—The State of the Art in 1981,* published by the Raptor Research Foundation, Inc., provided, however, that such structures shall be in accordance with the National Electrical Safety Code unless a specific waiver has been granted by the RUS Administrator. Copies of this publication may be purchased from the Raptor Research Foundation, Inc., c/o Department of Veterinary Biology, University of Minnesota, St. Paul, Minnesota 55101. It is also available for inspection at the Office of the Federal Register Information Center, 800 North Capitol Street, NW., suite 700, Washington, DC. This incorporation by reference has been approved by the Director of the Office of the Federal Register. Any deviation from the RUS construction standards for the purpose of raptor protection, which is not in accordance with the above report, must be approved by RUS prior to construction.

(b) *Transformer neutral connections.* Where it is necessary to separate the primary and secondary neutrals to provide the required electric service to a consumer, the RUS standard transformer connections may be modified in

accordance with Rule 97D2 of the National Electrical Safety Code.

[49 FR 11620, Mar. 27, 1984. Redesignated at 55 FR 39395, Sept. 27, 1990, and amended at 55 FR 53487, Dec. 31, 1990]

PART 1726—ELECTRIC SYSTEM CONSTRUCTION POLICIES AND PROCEDURES

Subpart A—General

Sec.
1726.1—1726.9 [Reserved]
1726.10 Introduction.
1726.11 Purpose.
1726.12 Applicability.
1726.13 Waivers.
1726.14 Definitions.
1726.15 ''Buy American''.
1726.16 Debarment and suspension.
1726.17 Restrictions on lobbying.
1726.18 Preloan contracting.
1726.19 Use of competitive procurement.
1726.20 Standards and specifications.
1726.21 New materials.
1726.22 Methods of construction.
1726.23 Qualification of bidders.
1726.24 Written contracts.
1726.25 Subcontracts.
1726.26—1726.34 [Reserved]
1726.35 Submission of documents to RUS.
1726.36 Documents subject to RUS approval.
1726.37 OMB control number.
1726.38—1726.49 [Reserved]

Subpart B—Distribution Facilities

1726.50 Distribution line materials and equipment.
1726.51 Distribution line construction.
1726.52—1726.74 [Reserved]

Subpart C—Substation and Transmission Facilities

1726.75 General.
1726.76 Substation and transmission line materials and equipment.
1726.77 Substation and transmission line construction.
1726.78—1726.124 [Reserved]

Subpart D—Generation Facilities

1726.125 Generating plant facilities.
1726.126—1726.149 [Reserved]

Subpart E—Buildings

1726.150 Headquarters buildings.
1726.151—1726.174 [Reserved]

Subpart F—General Plant

1726.175 General plant materials.
1726.176 Communications and control facilities.
1726.177—1726.199 [Reserved]

Subpart G—Procurement Procedures

1726.200 General requirements.
1726.201 Formal competitive bidding.
1726.202 Informal competitive bidding.
1726.203 Multiparty negotiation.
1726.204 Multiparty unit price quotations.
1726.205 Multiparty lump sum quotations.
1726.206—1726.249 [Reserved]

Subpart H—Modifications to RUS Standard Contract Forms

1726.250 General.
1726.251 Prior approved contract modification related to price escalation on transmission equipment, generation equipment, and generation construction contracts.
1726.252 Prior approved contract modification related to liability for special and consequential damages.
1726.253 Prior approved contract modification related to alternative bid provision for payment to contractor for bulk purchase of materials.
1726.254 Prior approved contract modifications related to RUS approval of contracts and amendments and modified bidding requirements.
1726.255 Prior approved contract modifications related to indemnification.
1726.256—1726.299 [Reserved]

Subpart I—RUS Standard Forms

1726.300 List of RUS standard contracting forms for electric systems.
1726.301 Use of printed forms.
1726.302 RUS approved forms of contract.
1726.303 Interest on overdue accounts.
1726.304—1726.309 [Reserved]
1726.310 Contractor's bond, RUS Form 168b.
1726.311 Contractor's bond, RUS Form 168c.
1726.312 Construction contract amendment, RUS Form 180.
1726.313 Certificate of completion, contract construction for buildings, RUS Form 181.
1726.314 Certificate of completion, contract construction, RUS Form 187.
1726.315 Equipment contract, RUS Form 198.
1726.316—1726.319 [Reserved]
1726.320 Construction contract, generating, RUS Form 200.
1726.321 Right-of-way clearing contract, RUS Form 201.
1726.322 Transmission system right-of-way clearing contract, RUS Form 203.
1726.323 Certificate (Buy America), RUS Form 213.
1726.324 Waiver and release of lien, RUS Form 224.

1726.325 Certificate of contractor, RUS Form 231.
1726.326 Construction or equipment contract amendment, RUS Form 238.
1726.327 Material receipt, RUS Form 251.
1726.328 Construction inventory (for labor and material contract), RUS Form 254.
1726.329 Contract to construction buildings, RUS Form 257.
1726.330 [Reserved]
1726.331 Bid bond, RUS Form 307.
1726.332—1726.339 [Reserved]
1726.340 Substation and switching station erection contract, RUS Form 764.
1726.341 Electric system communications and control equipment contract, RUS Form 786.
1726.342 Distribution line extension construction contract (labor and materials), RUS Form 790.
1726.343 Distribution line extension construction contract (labor only), RUS Form 792.
1726.344 [Reserved]
1726.345 Certificate of contractor and indemnity agreement (line extensions), RUS Form 792b.
1726.346 Supplemental contract for additional project, RUS Form 792c.
1726.347—1726.350 [Reserved]
1726.351 Electric system construction contract (labor and materials), RUS Form 830.
1726.352 Electric transmission construction contract (labor and materials), RUS Form 831.
1726.353—1726.399 [Reserved]

Subpart J—Contract Closeout

1726.400 Final contract amendment.
1726.401 Material contract closeout.
1726.402 Equipment contract closeout.
1726.403 Project construction contract closeout.
1726.404 Non-site specific construction contract closeout.
1726.405 Inventory of work orders (RUS Form 219).

AUTHORITY: 7 U.S.C. 901 *et seq.*, 1921 *et seq.*; Pub. L. 103–354, 108 Stat. 3178 (7 U.S.C. 6941 *et seq.*).

SOURCE: 60 FR 10155, Feb. 23, 1995, unless otherwise noted.

Subpart A—General

§§1726.1—1726.9 [Reserved]

§1726.10 Introduction.

The policies, procedures and requirements included in this part are intended to implement provisions of the standard form of loan documents between the Rural Utilities Service (RUS) and its electric borrowers. Unless prior written approval is received from RUS, borrowers are required to comply with RUS policies and procedures as a condition to RUS providing loans, loan guarantees, or reimbursement of general funds for the construction and improvement of electric facilities. Requirements relating to RUS approval of plans and specifications, duties and responsibilities of the engineer and architect, and engineering and architectural services contracts, are contained in other RUS regulations. The terms ''RUS form'', ''RUS standard form'', ''RUS specification'', ''and RUS bulletin'' have the same meanings as the terms ''REA form'', ''REA standard form'', ''REA specification'', ''and REA bulletin'', respectively, unless otherwise noted.

§1726.11 Purpose.

Each borrower is responsible for the planning, design, construction, operation and maintenance of its electric system. RUS, as a secured lender, has a legitimate interest in accomplishing RUS's programmatic objectives, and in assuring that the costs of construction, materials, and equipment are reasonable and economical and that the property securing the loans is constructed adequately to serve the purposes for which it is intended.

§1726.12 Applicability.

The requirements of this part apply to the procurement of materials and equipment for use by electric borrowers in their electric systems and to the construction of their electric systems if such materials, equipment, and construction are financed, in whole or in part, with loans made or guaranteed by RUS, including reimbursable projects. In order for general fund expenditures for procurement or construction to be eligible for reimbursement from loan funds, the borrower must comply with the procedures required by this part. In the case of jointly owned projects, RUS will determine on a case by case basis the applicability of the requirements of this part.

§ 1726.13 Waivers.

The Administrator may waive, for good cause on a case by case basis, certain requirements and procedures of this part. RUS reserves the right, as a condition of providing loans, loan guarantees, or other assistance, to require any borrower to make any specification, contract, or contract amendment subject to the approval of the Administrator.

§ 1726.14 Definitions.

Terms used in this part have the meanings set forth in 7 CFR 1710.2. References to specific RUS forms and other RUS documents, and to specific sections or lines of such forms and documents, shall include the corresponding forms, documents, sections and lines in any subsequent revisions of these forms and documents. In addition to the terms defined in 7 CFR 1710.2, the following terms have the following meanings for the purposes of this part:

Approval of proposed construction means RUS approval of a construction work plan or other appropriate engineering study and RUS approval, for purposes of system financing, of the completion of all appropriate requirements of part 1794 of this chapter.

Architect means a registered or licensed person employed by the borrower to provide architectural services for a project and duly authorized assistants and representatives.

Bona fide bid means a bid which is submitted by a contractor on the borrower's list of qualified bidders for the specific contract, prior to bid opening.

''Buy American'' certificate means a certification that the contractor has complied with the ''Buy American'' requirement (see § 1726.15).

Competitive procurement means procurement of goods or services based on lowest evaluated bid for similar products or services when three or more bids are received.

Construction unit means a specifically defined portion of a construction project containing materials, labor, or both, for purposes of bidding and payment.

Contracting committee means the committee consisting of three to five members representing the borrower's management and board of directors and the engineer. The contracting committee represents the borrower during contract clarifying discussions or negotiations under informal competitive bidding or multiparty negotiation, respectively.

Encumbrance means the process of approval for advance of loans funds by RUS.

Engineer means a registered or licensed person, who may be a staff employee or an outside consultant, to provide engineering services and duly authorized assistants and representatives.

Equipment means a major component of an electric system, e.g., a substation transformer, heat exchanger or a transmission structure.

Force account construction means construction performed by the borrower's employees.

Formal competitive bidding means the competitive procurement procedure wherein bidders submit sealed proposals for furnishing the goods or services stipulated in the specification. Bids are publicly opened and read at a predetermined time and place. If a contract is awarded, it must be to the lowest evaluated responsive bidder (see § 1726.201).

Goods or services means materials, equipment, or construction, or any combination thereof.

Informal competitive bidding means the competitive procurement procedure which provides for private opening of bids and allows clarifying discussions between the contracting committee and the bidders. During the clarifying discussions any exceptions to the bid documents must be eliminated, or the bid rejected, so that the contract is awarded to the lowest evaluated responsive bidder (see § 1726.202).

Material means miscellaneous hardware which is combined with equipment to form an electric system, e.g., poles, insulators, or conductors.

Minor error or irregularity means a defect or variation in a bid that is a matter of form and not of substance. Errors or irregularities are ''minor'' if they can be corrected or waived without being prejudicial to other bidders and when they do not affect the price, quantity, quality, or timeliness of construction. A minor error or irregularity is not an exception for purposes of

determining whether a bid is responsive.

Minor modification or improvement means a project where the cost is less than $50,000, exclusive of the cost of owner furnished materials.

Multiparty lump sum quotations means the procurement of goods or services on a lump sum basis, based on the lowest evaluated offering, when three or more offers are received. (See §1726.205).

Multiparty negotiation means the procurement procedure where three or more bids are received and provides for negotiations between the contracting committee and each bidder to determine the bid which is in the borrower's best interest (see §1726.203).

Multiparty unit price quotations means the procurement of goods or services on a unit price basis, based on the lowest evaluated offering, when three or more offers are received (See §1726.204).

Net utility plant (NUP) means Part C, Line 5 of RUS Form 7 for distribution borrowers or Section B, Line 5 of RUS Form 12a for power supply borrowers for the immediately preceding calendar year.

Procurement method means a procedure, including, but not limited to, those in subpart G of this part, that a borrower uses to obtain goods and services.

Owner furnished materials means materials or equipment or both supplied by the borrower for installation by the contractor.

Responsive bid means a bid with no exceptions or non-minor errors or irregularities on any technical requirement or in the contract terms and conditions.

RUS approval means written approval by the Administrator or a representative with delegated authority. RUS approval must be in writing, except in emergency situations where RUS approval may be given over the telephone followed by a confirming letter.

Unit prices means individual prices for specific construction units defined in accordance with RUS approved units specified in RUS standard contract forms.

§1726.15 "Buy American".

The borrower must ensure that all materials and equipment financed with loans made or guaranteed by RUS complies with the ''Buy American'' provisions of the Rural Electrification Act of 1938 (7 U.S.C. 903 note), as amended by the North American Free Trade Agreement Implementation Act (107 Stat 2129). When a ''Buy American'' certificate is required by this part, this must be on RUS Form 213.

§1726.16 Debarment and suspension.

Borrowers are required to comply with certain requirements on debarment and suspension in connection with procurement activities as set forth in part 3017 of this title, particularly with respect to lower tier transactions, e.g., procurement contracts for goods or services.

§1726.17 Restrictions on lobbying.

Borrowers are required to comply with certain restrictions and requirements in connection with procurement activities as set forth in part 3018 of this title.

§1726.18 Preloan contracting.

Borrowers must consult with RUS prior to entering into any contract for material, equipment, or construction if a construction work plan, general funds, loan or loan guarantee for the proposed work has not been approved. While the RUS staff will work with the borrower in such circumstances, nothing contained in this part is to be construed as authorizing borrowers to enter into any contract before the availability of funds has been ascertained by the borrower and all the requirements of part 1794 of this chapter, Environmental Policies and Procedures for Electric and Telephone Borrowers, have been fulfilled.

§1726.19 Use of competitive procurement.

RUS borrowers' procurement is not subject to the provisions of the Federal Acquisition Regulation (48 CFR chapter 1); however, since borrowers receive the benefit of Federal financial assistance borrowers must use competitive procurement to the greatest extent

practical. The borrower must use competitive procurement for obtaining all goods or services when a RUS loan or loan guarantee is involved except:

(a) As specifically provided for in subparts B through F of this part; or

(b) A waiver is granted.

§ 1726.20 Standards and specifications.

All materials, equipment, and construction must meet the minimum requirements of all applicable RUS standards and specifications. (See Part 1728, Electric Standards and Specifications for Materials and Construction, of this chapter, which is applicable regardless of the source of funding.)

§ 1726.21 New materials.

The borrower shall purchase only new materials and equipment unless otherwise approved by RUS, on a case by case basis, prior to the purchase.

§ 1726.22 Methods of construction.

The borrower is generally responsible for determining whether construction will be by contract or force account. If construction is by contract, the borrower must determine whether materials will be supplied by the contractor or will be furnished by the borrower. RUS reserves the right to require contract construction in lieu of force account construction on a case by case basis.

§ 1726.23 Qualification of bidders.

(a) *Qualified bidder list (QBL).* The borrower shall (acting through its engineer, if applicable) review the qualifications of prospective bidders for contract construction and for material and equipment procurement, and select firms qualified for inclusion on the borrower's list of qualified bidders for each contract. (See also § 1726.16 and § 1726.17.) A bid may not be solicited from a prospective bidder or opened by the borrower unless that bidder has been determined to be a qualified bidder for the contract. When preparing the QBL, in addition to the actual experience of the borrower, if any, in dealing with a prospective bidder, the borrower may solicit information from that bidder or from other parties with firsthand experience regarding the firm's capabilities and experience. It is also important to consider the firm's performance record, safety record, and similar factors in determining whether to include that firm on the QBL, since the borrower may not evaluate these factors when evaluating a bid from a qualified and invited bidder.

(b) *Conflict of interest.* If there is a relationship between the borrower or engineer and a prospective bidder which might cause the borrower or engineer to have or appear to have a conflict of interest, that prospective bidder shall not be included on the QBL unless the engineer discloses the nature of the relationship to the borrower. In the case of the borrower, if its employees or directors have a relationship with a prospective bidder, the prospective bidder shall not be included on the qualified bidders list unless the nature of the relationship is disclosed to the board of directors, and the board of directors specifically approves the inclusion of that bidder in light of the potential for a conflict of interest.

§ 1726.24 Written contracts.

(a) *General.* Procurement of goods or services must be by written contract or written purchase order. The borrower shall use a RUS Approved Form of Contract for such contracts where required by subparts B through F of this part.

(b) *Amendments to contracts*—(1) *Contract forms.* The borrower must use RUS Form 180, Construction Contract Amendment, for any change or addition in a distribution line construction contract. The borrower must use RUS Form 238, Construction or Equipment Contract Amendment, for any change or addition in any other contract for construction, or for materials or equipment.

(2) *Special considerations.* Each time an amendment to a construction contract is executed, the borrower must ensure that contractor's bond is adequate, that all necessary licenses and permits have been obtained, and that any environmental requirements associated with the proposed construction have been met.

(3) *Amendment approval requirements.* (i) If a RUS approved form of contract is required by this part, an amendment

must not alter the terms and conditions of the RUS approved form of contract without prior RUS approval.

(ii) The borrower must make a contract amendment subject to RUS approval if the underlying contract was made subject to RUS approval and the total amended contract price exceeds 120 percent of the original contract price (excluding any escalation provision contained in the contract).

(iii) Contract amendments, except as provided in paragraph (b)(3)(ii) of this section, are not subject to RUS approval and need not be submitted to RUS unless specifically requested by RUS on a case by case basis.

§ 1726.25 Subcontracts.

The contractor or supplier may use RUS Form 282, Subcontract, for subcontracts on construction, material or equipment contracts. Subcontracts are not subject to RUS approval and need not be submitted to RUS unless specifically requested by RUS on a case by case basis.

§§ 1726.26—1726.34 [Reserved]

§ 1726.35 Submission of documents to RUS.

(a) *Where to send documents.* Documents required to be submitted to RUS under this part are to be sent to the office of the borrower's respective RUS Regional Director, the Power Supply Division Director, or such other office of RUS as designated by RUS (see part 1700 of this chapter.)

(b) *Borrower certification.* When a borrower certification is required by this part, it must be made by the borrower's manager unless the board of directors specifically authorizes another person to make the required certification. In such case, a certified copy of the specific authorizing resolution must accompany the document or be on file with RUS.

(c) *Contracts requiring RUS approval.* The borrower shall submit to RUS three copies of each contract that is subject to RUS approval under subparts B through F of this part. At least one copy of each contract must be an original signed in ink (i.e., no facsimile signature). Each contract submittal must be accompanied by:

(1) A bid tabulation and evaluation and, if applicable, a written recommendation of the architect or engineer.

(2) For awards made under the informal competitive bidding procedure or the multiparty negotiation procedure, a written recommendation of the contracting committee (See §§ 1726.202 and 1726.203).

(3) Three copies of an executed contractor's bond on RUS approved bond forms as required in the contract form (at least one copy of which must be an original signed in ink) and one copy of the bid bond or facsimile of the certified check.

(4) A certification by the borrower or chairperson of the contracting committee, as applicable, that the appropriate bidding procedures were followed as required by this part.

(5) A certified copy of the board resolution awarding the contract.

(6) Evidence of clear title to the site for substations and headquarters construction contracts, if not previously submitted.

(7) Documentation that all reasonable measures were taken to assure competition if fewer than three bids were received.

(d) *Contract amendments requiring RUS approval.* The borrower must submit to RUS three copies of each contract amendment (at least one copy of which must be an original signed in ink) which is subject to RUS approval under § 1726.24(b). Each contract amendment submittal to RUS must be accompanied by:

(1) A certified copy of the board resolution approving the amendment; and

(2) A bond extension, where necessary.

(e) *Encumbrance of loan or loan guarantee funds.* (1) For contracts subject to RUS approval, the submittals required under paragraph (c) of this section will initiate RUS action to encumber loan or loan guarantee funds for such contracts.

(2) For contracts not subject to RUS approval (except for generation projects), loan or loan guarantee funds will normally be encumbered using RUS Form 219, Inventory of Work Orders, after closeout of the contracts. In cases where the borrower can show

good cause for a need for immediate cash, the borrower may request encumbrance of loan or loan guarantee funds based on submittal of a copy of the executed contract, provided it meets all applicable RUS requirements.

(3) For generation project contracts not subject to RUS approval, the borrower must submit to RUS the following documentation:

(i) A brief description of the scope of the contract, including contract identification (name, number, etc.);

(ii) Contract date;

(iii) Contractor's name;

(iv) Contract amount;

(v) Bidding procedure used;

(vi) Borrower certification that:

(A) The board of directors approved the contract;

(B) The bidding procedures and contract award for each contract were in conformance with the requirements of Part 1726, Electric System Construction Policies and Procedures;

(C) If a RUS approved form of contract is required by this part, the terms and conditions of the RUS approved form of contract have not been altered;

(D) If RUS has approved plans and specifications for the contract, the contract was awarded on the basis of those plans and specifications; and

(E) No restriction has been placed on the borrower's right to assign the contract to RUS or its successors.

(4) *Contract amendments.* (i) For amendments subject to RUS approval, the submittals required under paragraph (c) of this section will initiate RUS action to encumber loan or loan guarantee funds for contract amendments requiring RUS approval.

(ii) For amendments not subject to RUS approval (except generation projects), loan or loan guarantee funds will normally be encumbered using RUS Form 219, Inventory of Work Orders, after closeout of the contracts. In cases where the borrower can justify a need for immediate cash, the borrower may request encumbrance of loan or loan guarantee funds based on submittal of a copy of the executed amendment, providing it meets all applicable RUS requirements.

(iii) For each generation project contract amendment not subject to RUS approval, the borrower must submit to RUS the following information and documentation:

(A) The contract name and number;

(B) The amendment number;

(C) The amendment date;

(D) The dollar amount of the increase or the decrease of the amendment;

(E) Borrower certification that:

(*1*) The amendment was approved in accordance with the policy of the board of directors (the borrower must ensure that RUS has a certified copy of the board resolution establishing such policy);

(*2*) If a RUS approved form of contract is required by this part, the terms and conditions of the RUS approved form of contract has not been altered; and

(*3*) No restriction has been placed on the borrower's right to assign the contract to RUS or its successors.

§ 1726.36 Documents subject to RUS approval.

Unless otherwise indicated, the borrower shall make all contracts and amendments that are subject to RUS approval effective only upon RUS approval.

§ 1726.37 OMB control number.

The collection of information requirements in this part have been approved by the Office of Management and Budget and assigned OMB control number 0572–0107.

§§ 1726.38—1726.49 [Reserved]

Subpart B—Distribution Facilities

§ 1726.50 Distribution line materials and equipment.

(a) *Contract forms.* (1) The borrower shall use RUS Form 198, Equipment Contract, for purchases of equipment where the total cost of the contract is $500,000 or more.

(2) The borrower may, in its discretion, use RUS Form 173, Materials Contract, RUS Form 198, Equipment Contract, or a written purchase order for purchases of equipment of less than $500,000 and for all materials.

(b) *Standards and specifications.* Distribution line materials and equipment must meet the minimum requirements

of RUS standards as determined in accordance with the provisions of part 1728 of this chapter, Electric Standards and Specifications for Materials and Construction. The borrower must obtain RUS approval prior to purchasing any unlisted distribution line material or equipment of the types listed in accordance with the provisions of part 1728 of this chapter.

(c) *Procurement procedures.* It is the responsibility of each borrower to determine the procurement method that best meets its needs for the purchase of material and equipment to be used in distribution line construction.

(d) *Contract approval.* Contracts for purchases of distribution line materials and equipment are not subject to RUS approval and need not be submitted to RUS unless specifically requested by RUS on a case by case basis.

§ 1726.51 Distribution line construction.

(a) *Contract forms.* The borrower must use RUS Form 201, 790, 792, or 830, as outlined in this paragraph (a), for distribution line construction, except for minor modifications or improvements.

(1) The borrower may use RUS Form 790, Distribution Line Extension Construction Contract (Labor and Materials), or RUS Form 792, Distribution Line Extension Construction Contract (Labor only) under the following circumstances:

(i) For contracts for which the borrower supplies all materials and equipment; or

(ii) For non-site specific construction contracts accounted for under the work order procedure; or

(iii) If neither paragraph (a)(1)(i) or (a)(1)(ii) of this section are applicable, the borrower may use RUS Form 790 or 792 for contracts, up to a cumulative total of $250,000 or one percent of NUP, whichever is greater, per calendar year of distribution line construction, exclusive of the cost of owner furnished materials and equipment

(2) The borrower must use RUS Form 830, Electric System Construction Contract (Labor and Materials), for all other distribution line construction. Where distribution lines are being constructed incidental to transmission line construction, the borrower must use RUS Form 831, Electric Transmission Construction Contract.

(3) The borrower must use RUS Form 201, Right-of-Way Clearing Contract, for new distribution line construction right-of-way clearing when done separately from work performed under RUS Form 830.

(b) *Procurement procedures.* (1) It is the responsibility of each borrower to determine the procurement method that best meets its needs to award contracts in amounts of up to a cumulative total of $250,000 or one percent of NUP, whichever is greater, per calendar year of distribution line construction (including minor modifications or improvements), exclusive of the cost of owner furnished materials and equipment.

(2) In addition to the cumulative total stipulated in paragraph (b)(1) of this section, a borrower may use Multiparty Unit Price Quotations to award contracts in amounts of up to a cumulative total of $350,000 or 1.5 percent of NUP, whichever is greater, per calendar year of distribution line construction (including minor modifications or improvements), exclusive of the cost of owner furnished materials and equipment.

(3) The borrower shall use formal competitive bidding for all other distribution line contract construction. The amount of contracts bid using the formal competitive bidding procedure do not apply to the cumulative total stipulated in paragraph (b)(1) of this section.

(4) An amendment which increases the scope of the contract by adding a project is not considered competitively bid, therefore, the amount of that amendment does apply to the cumulative total stipulated in paragraph (b)(1) of this section.

(c) *Contract approval.* Contracts for distribution line construction are not subject to RUS approval and need not be submitted to RUS unless specifically requested by RUS on a case by case basis.

§§ 1726.52—1726.74 [Reserved]

Subpart C—Substation and Transmission Facilities

§ 1726.75 General.

As used in this part, ''substations'' includes substations, switching stations, metering points, and similar facilities.

§ 1726.76 Substation and transmission line materials and equipment.

(a) *Contract forms.* (1) The borrower must use RUS Form 198, Equipment Contract, for purchases of equipment where the total cost of the contract is $500,000 or more.

(2) The borrower may, in its discretion, use RUS Form 173, Materials Contract, RUS Form 198, Equipment Contract, or a written purchase order for purchases of equipment of less than $500,000 and for all materials.

(b) *Standards and specifications.* Substation and transmission line materials and equipment must meet the minimum requirements of RUS standards as determined in accordance with the provisions of part 1728 of this chapter, Electric Standards and Specifications for Materials and Construction. The borrower must obtain RUS approval prior to purchasing of any unlisted substation or transmission line material or equipment of the types listed in accordance with the provisions of part 1728 of this chapter.

(c) *Procurement procedures.* It is the responsibility of each borrower to determine the procurement method that best meets its needs for purchase of material and equipment to be used in substation and transmission line construction.

(d) *Contract approval.* Contracts for purchases of substation and transmission line materials and equipment are not subject to RUS approval and need not be submitted to RUS unless specifically requested by RUS on a case by case basis.

§ 1726.77 Substation and transmission line construction.

(a) *Contract forms.* (1) The borrower must use RUS Form 764, Substation Erection Contract, for construction of substations, except for minor modifications or improvements. The borrower must use RUS Form 831, Electric Transmission Construction Contract for projects where substations are incidental to transmission line construction and are to be constructed under the same contract.

(2) The borrower must use RUS Form 831, Electric Transmission Construction Contract, for construction of transmission lines (except for minor modifications or improvements).

(3) The borrower must use RUS Form 203, Transmission System Right-of-Way Clearing Contract, for new transmission line construction right-of-way clearing when right-of-way clearing is performed separately from work performed under RUS Form 831.

(b) *Procurement procedures.* (1) It is the responsibility of each borrower to determine the procurement method that best meets its needs to award contracts not requiring RUS approval in amounts of up to a cumulative total of $250,000 or one percent of NUP (not to exceed $2,000,000), whichever is greater, per calendar year of substation and transmission line construction (including minor modifications or improvements), exclusive of the cost of owner furnished materials and equipment.

(2) The borrower shall use formal competitive bidding for all other contract construction, including all contracts requiring RUS approval. The amount of contracts bid using the formal competitive bidding procedure do not apply to the cumulative total stipulated in paragraph (b)(1) of this section.

(3) An amendment which increases the scope of the contract by adding a project is not considered competitively bid, therefore, the amount of that amendment does apply to the cumulative total stipulated in paragraph (b)(1) of this section.

(c) *Contract approval.* Individual contracts in amounts of $250,000 or more or one percent of NUP (not to exceed $500,000 for distribution borrowers or $1,500,000 for power supply borrowers), whichever is greater, exclusive of the cost of owner furnished materials and equipment, are subject to RUS approval.

§§1726.78—1726.124 [Reserved]

Subpart D—Generation Facilities

§1726.125 Generating plant facilities.

This section covers the construction of all portions of a generating plant, including plant buildings and the generator step-up transformer. Generally, the transmission switchyard will be covered under this section during initial construction of the plant. Subpart C of this part covers subsequent modifications to transmission switchyards. Warehouses and equipment service type buildings are covered under subpart E of this part.

(a) *Contract forms.* (1) The borrower must use RUS Form 198, Equipment Contract, for the purchase of generating plant equipment in the amount of $1,500,000 or more and for any generating plant equipment contract requiring RUS approval.

(2) The borrower must use RUS Form 200, Construction Contract—Generating, for generating project construction contracts in the amount of $1,500,000 or more and for any generating project construction contract requiring RUS approval.

(3) The borrower may, in its discretion, use other contract or written purchase order forms for those contracts in amounts of less than $1,500,000 and that do not require RUS approval.

(b) *Plans and specifications.* The borrower shall obtain RUS approval of the plans and specifications for generating plant equipment prior to issuing invitations to bid for any contract subject to RUS approval as determined under this subpart and for any contract for generating plant equipment or construction which will cost $1,500,000 or more. Plans and specifications for other equipment and construction contracts do not require RUS approval and need not be submitted to RUS unless specifically requested by RUS on a case by case basis.

(c) *Procurement procedures.* (1) It is the responsibility of each borrower to determine the procurement method that best meets its needs to award contracts in amounts of less than $1,500,000 each.

(2) If the amount of the contract is $1,500,000 or more or if the contract requires RUS approval, the borrower must use formal or informal competitive bidding to award the contract.

(3) Where formal or informal competitive bidding is not applicable, or does not result in a responsive bid, multiparty negotiation may be used only after RUS approval is obtained.

(d) *Contract approval.* During the early stages of generating plant design or project design, RUS will, in consultation with the borrower and its consulting engineer, identify the specific contracts which require RUS approval based on information supplied in the plant design manual. The following are typical contracts for each type of generating project which will require RUS approval. Although engineering services are not covered by this part, they are listed in this paragraph (d) to emphasize that RUS approval is required for all major generating station engineering service contracts in accordance with applicable RUS rules. For types of projects not shown, such as nuclear and alternate energy projects, RUS will identify the specific contracts which will require RUS approval on a case by case basis.

(1) *Fossil generating stations.* Engineering services, steam generator, turbine generator, flue gas desulfurization system, particulate removal system, electric wiring and control systems, mechanical equipment installation (including turbine installation and plant piping), power plant building (foundation and superstructure), site preparation, coal unloading and handling facilities, main step-up substation, cooling towers, and dams or reservoirs.

(2) *Diesel and combustion turbine plants.* Engineering services, prime mover and generator, building (foundation and superstructure), and electrical control systems.

(3) *Hydro installations.* Engineering services, turbine/generator, civil works and powerhouse construction, electrical control system, and mechanical installation.

§§ 1726.126—1726.149 [Reserved]

Subpart E—Buildings

§ 1726.150 Headquarters buildings.

This section includes headquarters buildings such as warehouses and equipment service type buildings. Generating plant buildings are covered under subpart D of this part.

(a) *Contract forms.* The borrower must use RUS Form 257, Contract to Construct Buildings, for all contracts for construction of new headquarters facilities, and additions to, or modifications of existing headquarters facilities (except for minor modifications or improvements).

(b) *Procurement procedures.* A borrower may use Multiparty Lump Sum Quotations to award contracts in amounts of up to a cumulative total of $250,000 or one percent of NUP (not to exceed $1,000,000), whichever is greater, per calendar year of headquarters construction (including minor modifications or improvements.) The borrower must use formal competitive bidding for all other headquarters contract construction.

(c) *Contract approval.* Contracts for headquarters construction are not subject to RUS approval and need not be submitted to RUS unless specifically requested by RUS on a case by case basis.

§§ 1726.151—1726.174 [Reserved]

Subpart F—General Plant

§ 1726.175 General plant materials.

This section covers items such as office furniture and equipment; transportation equipment and accessories, including mobile radio systems, stores and shop equipment, laboratory equipment, tools and test equipment.

(a) *Contract forms.* The borrower may, in its discretion, use RUS Form 173, Material Contract, RUS Form 198, Equipment Contract, or a written purchase order.

(b) *Procurement procedures.* It is the responsibility of each borrower to determine the procurement method that best meets its needs for purchase of general plant material and equipment.

(c) *Contract approval.* Contracts for the purchase of general plant items are not subject to RUS approval and need not be submitted to RUS unless specifically requested by RUS on a case by case basis.

§ 1726.176 Communications and control facilities.

This section covers the purchase of microwave and power line carrier communications systems, load control, and supervisory control and data acquisition (SCADA) systems. Mobile radio systems are covered as general plant materials in § 1726.175.

(a) *Power line carrier systems.* Power line carrier equipment will frequently be purchased as part of a substation and will be included in the complete substation plans and specifications. When purchased in this manner, the requirements of subpart C of this part, Substation and Transmission Facilities, will apply. If obtained under a contract for only a power line carrier system, the requirements of paragraph (b) of this section apply.

(b) *Load control systems, communications systems, and SCADA systems*—(1) *Contract forms.* The borrower must use RUS Form 786, Electric System Communication and Control Equipment Contract. This form may be modified to be a ''purchase only'' contract form.

(2) *Procurement procedures.* (i) It is the responsibility of each borrower to determine the procurement method that best meets its needs to award contracts not requiring RUS approval in amounts of up to a cumulative total of $250,000 or one percent of NUP (not to exceed $2,000,000), whichever is greater, per calendar year of communications and control facilities construction (including minor modifications or improvements.), exclusive of the cost of owner furnished materials and equipment.

(ii) The borrower must use multiparty negotiation for all other communications and control facilities contract construction, including all contracts requiring RUS approval. The amount of contracts bid using the multiparty negotiation procedure do not apply to the cumulative total stipulated in paragraph (b)(2)(i) of this section.

(iii) An amendment which increases the scope by adding a project is not considered competitively bid, therefore, the amount of that amendment does apply to the cumulative total stipulated in paragraph (b)(2)(i) of this section.

(3) *Contract approval.* Individual contracts in amounts of $250,000 or more or one percent of NUP (not to exceed $500,000 for distribution borrowers or $1,500,000 for power supply borrowers), whichever is greater, exclusive of the cost of owner furnished materials and equipment, are subject to RUS approval.

§§ 1726.177—1726.199 [Reserved]

Subpart G—Procurement Procedures

§ 1726.200 General requirements.

The borrower must use the procedures described in this subpart where such procedures are required under subparts B through F of this part. The borrower must ensure that arrangements prior to announcement of the award of the contract are such that all bidders are treated fairly and no bidder is given an unfair advantage over other bidders.

§ 1726.201 Formal competitive bidding.

Formal competitive bidding is used for distribution, transmission, and headquarters facilities, and may be used for generation facilities. The borrower must use the following procedure for formal competitive bidding:

(a) *Selection of qualified bidders.* The borrower (acting through its engineer, if applicable) will compile a list of qualified bidders for each proposed contract. The borrower will send invitations to bid only to persons or organizations on its QBL for the specific project (see § 1726.23).

(b) *Invitations to bid.* The borrower (acting through its engineer, if applicable) is responsible for sending out invitations to prospective bidders, informing them of scheduled bid openings and taking any other action necessary to procure full, free and competitive bidding. The borrower should send out a sufficient number of invitations in order to assure adequate competition and so that at least three bids will be received. Subject to the foregoing criteria, the determination of how many and which bidders will be permitted to bid will be the responsibility of the borrower.

(c) *Evaluation basis.* Any factors, other than lowest dollar amount of the bid, which are to be considered in evaluating the proposals of qualified bidders (e.g., power consumption, losses, etc.) must be stated in the ''Notice and Instructions to Bidders.'' The borrower will not evaluate a bidder's performance record, safety record, and similar factors when evaluating a bid from a qualified and invited bidder. Such factors are to be considered when determining whether to include a particular bidder on the qualified bidders list.

(d) *Handling of bids received.* The borrower or the engineer, as applicable, will indicate, in writing, the date and time of receipt by the borrower or the engineer on the outside envelope of each bid and all letters and other transmittals amending or modifying the bids. Any bid received at the designated location after the time specified must be returned to the bidder unopened.

(e) *Bid openings.* Bid openings are generally conducted by the engineer in the presence of bidders and a representative of the borrower and the borrower's attorney. Each bona fide bid must be opened publicly and reviewed for any irregularities, errors, or exceptions. It must be verified that any addendum or supplement to the specification has been acknowledged by the bidder. The adequacy of bid bonds or certified checks must be verified at this time.

(f) *Conditions affecting acceptability of bids.* The borrower must take the following specified action if any of the following exist:

(1) *Fewer than three bona fide bids received.* If fewer than three bona fide bids are received for the contract project, the borrower must determine that all reasonable measures have been taken to assure competition prior to awarding the contract. This determination must be documented and such documentation submitted to RUS where required by subpart A of this part. The borrower may, however, elect to reject

all bids, make changes in the specification or the qualified bidders list or both and invite new bids.

(2) *Significant error or ambiguity in the specification.* If a significant error or ambiguity in the specification is found which could result in the bidders having varying interpretations of the requirements of the bid, the borrower must either issue an addendum to each prospective bidder correcting the error or ambiguity before bids are received, or reject all bids and correct the specification. If a significant error or ambiguity in the specification is discovered after the bids are opened, the borrower must reject all bids, correct the specification and invite new bids.

(3) *Minor errors or omissions in the specification.* If minor errors or omissions in the specification are found, the borrower must issue an addendum to each prospective bidder correcting the error or omission prior to opening any bids. After bid opening, the error or omission must be corrected in the executed contract.

(4) *Minor errors or irregularities in bid.* The borrower may waive minor errors or irregularities in any bid, if the borrower determines that such minor errors or irregularities were made through inadvertence. Any such minor errors or irregularities so waived must be corrected on the bid in which they occur prior to the acceptance thereof by the borrower.

(5) *Non-minor error or irregularity in bid.* If a bid contains a non-minor error or irregularity, the bid must be rejected and the bid price must not be disclosed.

(6) *Unbalanced bid.* If a bid contains disproportionate prices between labor and materials or between various construction units, the borrower may reject the bid.

(7) *No acceptable price quoted.* If none of the bidders quote an acceptable price, the borrower may reject all bids.

(g) *Evaluating bids.* The borrower (acting through the engineer, if applicable) must conduct the evaluation of bids on the basis of the criteria set out in the ''Notice and Instructions to Bidders.'' The contract, if awarded, must be awarded to the bidder with the lowest evaluated responsive bid.

(h) *Announcement of bids.* If possible, the borrower will announce bids at the bid opening. However, where extensive evaluation is required, the borrower may elect to adjourn and make formal written announcement to all bidders at a later time. Any discrepancy in a rejected bid must be indicated in the bid announcement.

(i) *Award of contract.* Upon completion of the bid evaluations and based upon the findings and recommendations of the borrower's management and engineer, the borrower's board of directors will either:

(1) Resolve to award the contract to the lowest evaluated responsive bidder; or

(2) Reject all bids.

(j) *Certification by the borrower and its engineer.* The borrower shall certify and the engineer shall certify as follows: ''The procedures for formal competitive bidding, as described in 7 CFR 1726.201, were followed in awarding this contract.'' The certification executed by and on behalf of the borrower and its engineer shall be submitted to RUS in writing where required by subpart A of this part.

§ 1726.202 Informal competitive bidding.

Informal competitive bidding may be used for equipment purchases and generation construction. The borrower must use the following procedure for informal competitive bidding:

(a) *Selection of qualified bidders.* The borrower (acting through its engineer, if applicable) will compile a list of qualified bidders for each proposed contract. The borrower will send invitations to bid only to persons or organizations on its qualified bidder list for the specific project (see § 1726.23).

(b) *Invitations to bid.* The borrower (acting through its engineer, if applicable) is responsible for sending out invitations to prospective bidders, informing them of scheduled bid openings and any other action necessary to procure full, free and competitive bidding. In any event, however, sufficient invitations need to be sent out to assure competition and that at least three bids will be received. Subject to the criteria in the preceding sentence, the determination of how many and which

bidders will be permitted to bid will be the responsibility of the borrower.

(c) *Notice and instructions to bidders.* The borrower must indicate in the ''Notice and Instructions to Bidders'' section of the bid documents that bids will be opened privately. The borrower may elect to conduct clarifying discussions with the bidders. If such clarifying discussions are held, at least the three apparent low evaluated bidders must be given an equal opportunity to resolve any questions related to the substance of the bidder's proposal and to arrive at a final price for a responsive bid.

(d) *Evaluation basis.* Any factors, other than lowest dollar amount of the bid, which are to be considered in evaluating the proposals of qualified bidders (e.g., power consumption, losses, etc.) must be stated in the ''Notice and Instructions to Bidders.'' The borrower will not evaluate a bidder's performance record, safety record, and similar factors when evaluating a bid from a qualified and invited bidder. Such factors are to be considered when determining whether to include a particular bidder on the qualified bidders list.

(e) *Handling of bids received.* The borrower or the engineer, as applicable, will indicate, in writing, the date and time of receipt by the borrower or the engineer on the outside envelope of each bid and all letters and other transmittals amending or modifying the bids. Any bid received at the designated location after the time specified must be returned to the bidder unopened.

(f) *Bid opening.* The contracting committee will conduct the bid opening in private. The contracting committee will open each bona fide bid which has been received prior to the deadline, and review it for any irregularities, errors, or exceptions. It must be verified that any addendum to the specification has been acknowledged by each bidder. The adequacy of bid bonds or certified checks must also be verified.

(g) *Conditions affecting acceptability of bids.* The borrower must take the following specified action if any of the following exist:

(1) *Fewer than three bona fide bids received.* If fewer than three bona fide bids are received for the contract project, the borrower must determine that all reasonable measures have been taken to assure competition prior to awarding the contract. This determination must be documented and such documentation submitted to RUS where required by subpart A of this part. The borrower may, however, elect to reject all bids, make changes in the specification or the qualified bidders list or both and invite new bids.

(2) *Significant error or ambiguity in the specification.* If a significant error or ambiguity in the specification is found which could result in the bidders having varying interpretations of the requirements of the bid, the borrower must either issue an addendum to each prospective bidder correcting the error or ambiguity before bids are received, or reject all bids and correct the specification. If a significant error or ambiguity in the specification is discovered after the bids are opened, the borrower must reject all bids, correct the specification and invite new bids.

(h) *Clarification of proposals.* The contracting committee may elect not to hold any clarifying discussions and recommend awarding the contract to the low responsive bidder. Otherwise, the contracting committee must give at least each of the three apparent lowest evaluated bidders an equal opportunity to participate in discussions for the purpose of resolving questions regarding the specification and contract terms and to arrive at a final price. Neither prices of other bids nor relative ranking of any bidder are to be revealed under any circumstances. Such discussions may be held by telephone or similar means provided at least each of the three apparent lowest evaluated bidders have an equal opportunity to participate. Upon completion of the clarifying discussions, the contracting committee will determine the lowest evaluated responsive bid. If no bids are responsive after the contracting committee has completed clarifying discussions, no contract award can be made under the informal bidding procedure.

(i) *Award of the contract.* Upon completion of the bid evaluations, the contracting committee will promptly report all findings and recommendations

to the borrower's board of directors. The board will either:

(1) Resolve to award the contract to the lowest evaluated responsive bidder; or

(2) Reject all bids.

(j) *Certifications by the contracting committee.* The chairperson of the contracting committee shall certify as follows: ''The procedures for informal competitive bidding as described in 7 CFR 1726.202 were followed in awarding this contract.'' The certification executed by the chairperson of the contracting committee shall be submitted to RUS in writing where required by subpart A of this part.

§ 1726.203 Multiparty negotiation.

Multiparty negotiation may only be used where permitted under subpart F of this part or where prior RUS approval has been obtained. The borrower must use the following procedure for multiparty negotiation:

(a) *Selection of qualified bidders.* The borrower (acting through its engineer, if applicable) will compile a list of qualified bidders for each proposed contract. The borrower will send invitations to bid only to persons or organizations on its qualified bidder list for the specific project (see § 1726.23).

(b) *Invitations to bid.* The borrower (acting through its engineer, if applicable) is responsible for sending out invitations to prospective bidders, informing them of scheduled bid openings and any other action necessary to procure full, free and competitive bidding. In any event, however, sufficient invitations need to be sent out to assure competition and so that at least three bids will be received. Subject to the criteria in the preceding sentence, the determination of how many and which bidders will be permitted to bid will be the responsibility of the borrower.

(c) *Notice and instructions to bidders.* The borrower must indicate in the ''Notice and Instructions to Bidders'' section of the bid documents that bids will be opened privately. The borrower may elect to conduct negotiations with the bidders. If such negotiations are held, at least the three apparent low evaluated bidders must be given an equal opportunity to resolve any questions related to the substance of the bidder's proposal and to arrive at a final price.

(d) *Evaluation basis.* Any factors, other than lowest dollar amount of the bid, which are to be considered in evaluating the proposals of qualified bidders (e.g., power consumption, losses, etc.) must be stated in the ''Notice and Instructions to Bidders.'' The borrower will not evaluate a bidder's performance record, safety record, and similar factors when evaluating a bid from a qualified and invited bidder. Such factors are to be considered when determining whether to include a particular bidder on the qualified bidders list.

(e) *Handling of bids received.* The borrower or the engineer, as applicable, will indicate, in writing, the date and time of receipt by the borrower or the engineer on the outside envelope of each bid and all letters and other transmittals amending or modifying the bids. Any bid received at the designated location after the time specified must be returned to the bidder unopened.

(f) *Bid opening.* The contracting committee will conduct the bid opening in private. The contracting committee will open each bona fide bid which has been received prior to the deadline, and review it for any irregularities, errors, or exceptions. It must be verified that any addendum to the specification has been acknowledged by each bidder. The adequacy of bid bonds or certified checks must also be verified.

(g) *Conditions affecting acceptability of bids.* The borrower must take the following specified action if any of the following exist:

(1) *Fewer than three bona fide bids received.* If fewer than three bona fide bids are received for the contract project, the borrower must determine that all reasonable measures have been taken to assure competition prior to awarding the contract. This determination must be documented and such documentation submitted to RUS where required by subpart A of this part. The borrower may, however, elect to reject all bids, make changes in the specification or the qualified bidders list or both and invite new bids.

(2) *Significant error or ambiguity in the specification.* If a significant error or ambiguity in the specification is found

which could result in the bidders having varying interpretations of the requirements of the bid, the borrower must either issue an addendum to each prospective bidder correcting the error or ambiguity before bids are received, or reject all bids and correct the specification. If a significant error or ambiguity in the specification is discovered after the bids are opened, the borrower must reject all bids, correct the specification and invite new bids.

(h) *Negotiations.* The contracting committee may elect not to hold any negotiations and recommend award of the contract. Otherwise, the contracting committee must give at least each of the three apparent lowest evaluated bidders an equal opportunity to participate in negotiations for the purpose of resolving questions regarding the specification and contract terms and to arrive at a final price. Neither prices of other bids nor relative ranking of any bidder are to be revealed under any circumstances. Such discussions may be held by telephone or similar means provided at least each of the three apparent lowest evaluated bidders have an equal opportunity to participate. Upon completion of the negotiations, the contracting committee will determine the bid that is in the borrower's best interest.

(i) *Award of the contract.* Upon completion of the bid evaluations, the contracting committee will promptly report all findings and recommendations to the borrower's board of directors. The board will either:

(1) Resolve to award the contract to the selected bidder; or

(2) Reject all bids.

(j) *Certifications by the contracting committee.* The chairperson of the contracting committee shall certify as follows: ''The procedures for multiparty negotiation as described in 7 CFR 1726.203 were followed in awarding this contract.'' The certification executed by the chairperson of the contracting committee shall be submitted to RUS in writing where required by subpart A of this part.

§1726.204 Multiparty unit price quotations.

The borrower or its engineer must contact a sufficient number of suppliers or contractors to assure competition and so that at least three bids will be received. On the basis of written unit price quotations, the borrower will select the supplier or contractor based on the lowest evaluated cost.

§1726.205 Multiparty lump sum quotations.

The borrower or its engineer must contact a sufficient number of suppliers or contractors to assure competition and so that at least three bids will be received. On the basis of written lump sum quotations, the borrower will select the supplier or contractor based on the lowest evaluated cost.

§§1726.206—1726.249 [Reserved]

Subpart H—Modifications to RUS Standard Contract Forms

§1726.250 General.

RUS provides standard contract forms for procurement of materials, equipment, and construction, for contract amendments and subcontracts, and various related forms for use by RUS borrowers. See §1726.300 for a listing of these forms and how to obtain them. The standard contract forms shall be used by the borrowers in accordance with the provisions of this part. RUS will give prior approval to certain modifications to these forms without changing the applicable requirements for RUS approval. Such approved modifications are set forth in this subpart. These are the only modifications given prior RUS approval.

§1726.251 Prior approved contract modification related to price escalation on transmission equipment, generation equipment, and generation construction contracts.

(a) *General.* Where the borrower encounters reluctance among manufacturers, suppliers, and contractors to bid a firm price on transmission equipment or generation equipment, materials or construction, modifications may be made in the RUS standard form of contracts. These modifications, if applicable, may include, as an alternative to the standard form, provisions for adjusting a base price either upward or downward as determined by

changes in specified indexes between the time of the bid and the time the work is performed or materials are procured by the contractor for such work. A large number of labor and materials indexes are published monthly by the Bureau of Labor Statistics (BLS). The borrower (acting through its engineer, if applicable) will select the indexes for the particular item to be used in the price adjustment clause. Suppliers' corporate indexes may not be used. Labor and materials indexes are reported in the BLS's monthly publications entitled ''Employment and Earnings'' and ''Producer Prices and Price Indexes.'' These publications may be ordered through the Superintendent of Documents, U.S. Government Printing Office, Washington, DC 20402, or any of the BLS regional offices.

(b) *Material and equipment contracts.* The approved provisions needed to reflect the modifications to provide for price escalation in the material or equipment contract forms for generation facilities are as follows:

(1) Insert new paragraphs in the Notice and Instructions to Bidders as follows:

''Proposals are invited on the basis of firm prices (or prices with a stated maximum percentage escalation) or on the basis of nonfirm prices to be adjusted as provided for below or on both bases. The owner may award the contract on either basis.

Nonfirm prices. The prices are subject to adjustment upward or downward based on change in the Bureau of Labor Statistics labor and material indexes.

A proportion of ___ percent [the borrower will enter the appropriate percentage amount] of the contract price shall be deemed to represent labor cost and shall be adjusted based on changes in the Bureau of Labor Statistics, Average Hourly Earnings Rate___ [the borrower will enter the appropriate BLS index] from the month in which the bids are opened to the month in which the labor is incorporated in the equipment or materials. The adjustment for labor costs shall be obtained by applying the percentage of increase or decrease in such index, calculated to the nearest one-tenth of one percent, to the percentage of the contract prices deemed to represent labor costs. A portion of ___ percent [the borrower will enter the appropriate percentage amount] of the contract price shall be deemed to represent material costs and shall be adjusted based on changes in the Bureau of Labor Statistics, material index ___ [the borrower will enter the appropriate BLS index] for the period and in a manner similar to the labor cost adjustment.''

(2) Insert the following in the contract documents under the ''Proposal'' section:

''Firm Price $_____
Nonfirm Price $_____''

(3) For equipment that uses a large quantity of insulating oil, the borrower may insert the following in the contract documents under the ''Proposal'' section:

''The price for insulating oil shall be adjusted upward or downward based on the change in the Bureau of Labor Statistics Refined Petroleum Rate (057) from the month in which the bids are opened to the month in which the oil is purchased by the equipment supplier. Contracts shall be evaluated based on an estimated cost of ___ cents per gallon [the borrower will enter the appropriate cost] for oil. Such adjustment, if any, shall not change the contract amount for purpose of applying any other adjustments to the contract prices.''

(c) *Construction contracts.* The approved provisions needed to reflect the modifications to provide for price escalation in the construction contract forms for generation facilities are as follows:

(1) Insert new paragraphs in the ''Notice and Instructions'' to Bidders as follows:

''Proposals are invited on the basis of firm prices (or prices with a stated maximum percentage escalation) or on the basis of nonfirm prices to be adjusted as provided for below or on both bases. The owner may award the contract on either basis.

Nonfirm Prices—The prices are subject to adjustment upward or downward based on changes in the Bureau of Labor Statistics labor and material indexes.

A proportion of ___ percent [the borrower will enter the appropriate percentage amount] of the contract price shall be deemed to represent shop labor costs and shall be adjusted based on changes in the Bureau of Labor Statistics, Average Hourly Earnings Rate ___ [the borrower will enter the appropriate BLS index] from the month in which bids are opened to the month in which the work is accomplished. The adjustment for shop labor costs shall be obtained by applying the percentage increase or decrease in such index, to the percentage of each partial payment deemed to represent shop labor costs. A portion of ___ percent

[the borrower will enter the appropriate percentage amount] of the contract prices shall be deemed to represent material costs and shall be adjusted based on changes in the Bureau of Labor Statistics, Producer Price Index, ___ [the borrower will enter the appropriate BLS index] for the period and in a manner similar to the shop labor costs adjustment. A portion of ___ percent [the borrower will enter the appropriate percentage amount] of the contract price shall be deemed to represent field labor costs and shall be adjusted based on changes in the Bureau of Labor Statistics, Average Hourly Earnings Rate ___ [the borrower will enter the appropriate BLS index], for the period and in a manner similar to the shop labor costs adjustment.''

(2) Insert the following in the contract documents under the ''Proposal'' section:

''Firm Price $_____
Nonfirm Price $_____''

§1726.252 Prior approved contract modification related to liability for special and consequential damages.

This section applies only to transmission equipment purchases and generation contracts. Where the borrower anticipates difficulty in obtaining responsive bids on RUS standard contract forms due to a lack of limitation with respect to special and consequential damages, and where the borrower believes that such a modification will encourage competition through the receipt of an alternative bid which limits the bidder's liability for special and consequential damages, the borrower may make the following approved phrase modifications in the RUS standard contract form on which the borrower solicits bids:

(a) Insert new paragraphs in the ''Notice and Instructions to Bidders'' as follows:

''Proposals are invited on the basis of alternative Liability Clauses Numbers 1 and 2. The Owner will determine on which Liability Clause basis the award will be made. Any other liability clauses in the proposal or any other modifications will be considered not responsive and unacceptable. These Liability Clauses are defined as follows:

Liability Clause Number 1. This will include unmodified all of the standard terms and conditions of the form of contract furnished by the Owner and attached hereto.

Liability Clause Number 2. This will include the following paragraph, in addition to all of the standard terms and conditions, otherwise unmodified, of the form of contract furnished by the Owner and attached hereto:

'Except for the Seller's willful delay or refusal to perform the contract in accordance with its terms, the Seller's liability to the Owner for special or consequential damages on account of breach of this contract shall not exceed in total an amount equal to ___ percent [the borrower will insert an appropriate percentage between 0 and 100 percent, inclusive] of the contract price.'''

(b) Insert the following in the contract documents under the ''Proposal'' section:

''Price $(Based on Liability Clause 1)_____
Price $(Based on Liability Clause 2)_____''

(c) Insert the following in the acceptance section of the standard contract form:

''This contract is based on Liability Clause Number_____.''

(d) In RUS Form 200, the word ''Bidder'' would replace the word ''Seller'' in the Liability Clause in paragraph (a) of this section.

§1726.253 Prior approved contract modification related to alternative bid provision for payment to contractor for bulk purchase of materials.

When construction is to be performed over an extended period of time, but large quantities of material are to be purchased by the contractor at the beginning of the project (e.g., cable for URD installations), the borrower may allow alternative bids providing for payment to the contractor of 90 percent of the cost of such materials within 30 days of delivery of those materials at the job site. The borrower will retain the right to award the contract with or without the alternative payment provision, however, the contract still must be awarded on the basis of the lowest evaluated responsive bid for the alternative accepted.

§1726.254 Prior approved contract modifications related to RUS approval of contracts and amendments and modified bidding requirements.

It will be necessary for borrowers to make certain modifications to various RUS contract forms to implement the provisions of this part. If a RUS approved form of contract is required to

be used by this part and private bid opening is permitted by this part, the ''Notice and Instructions to Bidders'' of the contract form may be modified accordingly. Other modifications are needed to indicate that certain provisions related to RUS approval are not applicable under specified circumstances. These modifications are as follows:

(a) *RUS Form 173 Materials Contract.* No modifications.

(b) *RUS Form 180 Construction Contract Amendment.* No modifications.

(c) *RUS Form 198 Equipment Contract.* For contracts NOT requiring approval of the Administrator (in accordance with subparts B through F of this part) the applicable modifications are as follows:

(1) Change Section 5(e) of the ''Equipment Contract'' to read as follows:

''(e) Each and all of the covenants and agreements herein contained shall extend to and be binding upon the successors and assigns of the parties hereto provided, however, the Seller shall not assign this contract or any part hereof without approval in writing of the Purchaser, and further the Seller shall not enter into any contract with any person, firm or corporation for the performance of the Seller's obligations hereunder, or any part thereof, without the approval in writing of the Purchaser.''

(2) Delete Section 5(f) of the ''Equipment Contract.''

(d) *RUS Form 200 Construction Contract—Generating.* For contracts Not requiring approval of the Administrator (in accordance with subparts B through F of this part) the applicable modifications are as follows:

(1) *Contractor's Proposal, Article II, Section 3(a), Sentence 2.* Delete the words ''and the Administrator.''

(2) *Contractor's Proposal, Article II, Section 3(d), Sentence 2.* Delete the words ''and approved by the Administrator[1]'' and the associated footnote.

(3) *Contractor's Proposal, Article VI, Section 7.* Change to read as follows:

''Nonassignment of Contract. Except as provided in Section 8 of this Article, the Bidder will not assign this Contract, or any interest in any funds that may become due hereunder, or enter into any contract with any person, firm or corporation, for the performance of the Bidder's obligations hereunder, or any part hereof without the approval in writing of the Owner and the Surety or Sureties, if any.''

(4) *Contractor's Proposal, Article VI.* Delete Section 10.

(5) *Acceptance.* Delete the words ''Subject to the approval of the Administrator.''

(e) *RUS Form 201 Right-of-Way Clearing Contract.* No modifications.

(f) *RUS Form 203 Transmission System Right-of-Way Clearing Contract.* For contracts Not requiring approval of the Administrator (in accordance with subparts B through F of this part) the applicable modifications are as follows.

(1) *Notice and Instructions to Bidders, Section 8.* Delete the words ''and such acceptance has been approved by the Administrator.''

(2) *Contractor's Proposal, Article II, Section 1(a).* Replace the word ''Administrator'' with the word ''Owner'' in two places in the referenced section.

(3) *Contractor's Proposal, Article II, Section 3(d), Sentence 1.* Delete the words ''and with the approval of the Administrator[1]'' and the associated footnote.

(4) *Contractor's Proposal, Article II, Section 3(d), Sentence 3.* Delete the words ''and approved by the Administrator[2]'' and the associated footnote.

(5) *Contractor's Proposal, Article III, Section 1.* Delete the words ''and the Administrator'' in five places in the referenced section.

(6) *Contractor's Proposal, Article III, Section 1(b).* Replace the word ''Administrator'' with the word ''Owner.''

(7) *Contractor's Proposal, Article III, Section 1(e).* Replace the word ''Administrator'' with the word ''Owner.''

(8) *Contractor's Proposal, Article VI, Section 1(d).* Delete the words ''and the Administrator.''

(9) *Contractor's Proposal, Article VI.* Delete Section 10.

(10) *Acceptance.* Delete the words ''Subject to the approval of the Administrator.''

(g) *RUS Form 238 Construction or Equipment Contract Amendment.* If the contract amendment does not require RUS approval, in accordance with § 1726.24(b), the borrower may delete from RUS Form 238 the following sentence:

''(The Administrator of RUS is hereby authorized to approve this amendment either

in whole or in part and to delete such items as do not meet his approval.)''

(h) *RUS Form 257 Contract to Construct Buildings.* No modifications.

(i) *RUS Form 282 Subcontracts.* The applicable modifications are as follows:

(1) *Section 6, line 3.* Delete the words ''and the Administrator of the Rural Utilities Service (hereinafter called the Administrator).''

(2) *Section 7, line 2.* Change Section 7, line 2 to read as follows:

''approved in writing by the Owner and the Surety, if any; provided, * * *''

(3) *Section 7, line 3.* Delete the words ''and the Administrator.''

(j) *RUS Form 764 Substation and Switching Station Erection Contract.* For contracts NOT requiring approval of the Administrator (in accordance with subparts B through F of this part) the applicable modifications are as follows:

(1) *Notice and Instructions to Bidders, Section 10.* Delete the words ''and such acceptance has been approved by the Administrator.''

(2) *Contractor's Proposal, Article II, Section 1.a.* Replace the word ''Administrator'' with the word ''Owner'' in two places in the referenced section.

(3) *Contractor's Proposal, Article II, Section 1.d, Sentence 1.* Delete the words ''and with the approval of the Administrator[1]'' and the associated footnote.

(4) *Contractor's Proposal, Article II, Section 1.d, Sentence 2.* Delete the words ''and approved by the Administrator[2]'' and the associated footnote.

(5) *Contractor's Proposal, Article III, Section 1.* Delete the words ''and the Administrator'' in five places in the referenced section.

(6) *Contractor's Proposal, Article III, Section 1.b.* Replace the word ''Administrator'' with the word ''Owner.''

(7) *Contractor's Proposal, Article III, Section 1.e.* Replace the word ''Administrator'' with the word ''Owner.''

(8) *Contractor's Proposal, Article VI, Section 1.e.* Delete the words ''and the Administrator.''

(9) *Contractor's Proposal, Article VI.* Delete Section 10.

(10) *Acceptance.* Delete the words ''Subject to the approval of the Administrator.''

(k) *RUS Form 786 Electric System Communications and Control Equipment Contract (including installation).* For contracts NOT requiring approval of the Administrator (in accordance with subparts B through F of this part) the applicable modifications are as follows:

(1) *Article I, Section 2.* Delete the words ''subject to the approval of the Administrator[1]'' and ''and approved by the Administrator[2]'' and the associated footnotes.

(2) *Article II, Section 1, Sentence 2.* Replace the word ''Administrator'' with ''Purchaser.''

(3) *Article II, Section 5.* Delete the words ''subject to the approval of the Administrator[3]'' and ''subject to the approval of the Administrator[4]'' and the associated footnotes.

(4) *Article III, Section 2, Sentence 3.* Replace the words ''if the Administrator shall so approve'' with the words ''if the Purchaser shall so approve.''

(5) *Article VI.* Delete Section 7.

(6) *Acceptance.* Delete the words ''Subject to the approval of the Administrator.''

(l) *RUS Form 790 Distribution Line Extension Construction Contract (Labor and Materials).* No modifications.

(m) *RUS Form 792 Distribution Line Extension Construction Contract (Labor Only).* No modifications.

(n) *RUS Form 830 Electric System Construction Contract.* No modifications.

(o) *RUS Form 831 Electric Transmission Construction Contract.* For contracts NOT requiring approval of the Administrator (in accordance with subparts B through F of this part) the applicable modifications are as follows:

(1) *Notice and Instructions to Bidders, Section 10.* Delete the words ''and such acceptance has been approved by the Administrator.''

(2) *Contractor's Proposal, Article II, Section 1.d.* Delete the words ''with the approval of the Administrator[1]'' and ''and approved by the Administrator[2]'' and the associated footnotes.

(3) *Contractor's Proposal, Article II, Section 4.a.* Delete the words ''and approved by the Administrator[3]'' and the associated footnote.

(4) *Contractor's Proposal, Article III, Section 1.a. Sentence 4.* Delete the words ''and the Administrator.''

(5) *Contractor's Proposal, Article III, Section 1.b.* Replace the word ''Administrator'' with the word ''Owner.''

(6) *Contractor's Proposal, Article III, Section 1.c.* Delete the words ''and the Administrator'' in four places in the referenced section.

(7) *Contractor's Proposal, Article III, Section 1.e.* Replace the word ''Administrator'' with the word ''Owner.''

(8) *Contractor's Proposal, Article VI, Section 1.e.* Delete the words ''and the Administrator.''

(9) *Contractor's Proposal, Article VI.* Delete Section 11.

(10) *Acceptance.* Delete the words ''Subject to the approval of the Administrator.''

§ 1726.255 Prior approved contract modifications related to indemnification.

(a) As an alternative to the indemnification provision required in RUS standard construction contract forms in those jurisdictions requiring specific language concerning the requirement that the indemnitor indemnify the indemnitee for the indemnitee's own negligence, the borrower may add the words ''otherwise this provision shall apply to any alleged negligence or condition caused by the Owner'' so that the first paragraph reads as follows:

''i. To the maximum extent permitted by law, Bidder shall defend, indemnify, and hold harmless Owner and Owner's directors, officers, and employees from all claims, causes of action, losses, liabilities, and expenses (including reasonable attorney's fees) for personal loss, injury, or death to persons (including but not limited to Bidder's employees) and loss, damage to or destruction of Owner's property or the property of any other person or entity (including but not limited to Bidder's property) in any manner arising out of or connected with the Contract, or the materials or equipment supplied or services performed by Bidder, its subcontractors and suppliers of any tier. But nothing herein shall be construed as making Bidder liable for any injury, death, loss, damage, or destruction caused by the sole negligence of Owner, otherwise this provision shall apply to any negligence or condition caused by the Owner.''

(b) As an alternative to the indemnification provision required in RUS standard construction contract forms in those jurisdictions that have a legal prohibition against one party indemnifying another for the other's negligence, the borrower may replace the words ''defend, indemnify, and hold harmless'' with the words '' shall pay on behalf of'' so that the first paragraph reads as follows:

''i. To the maximum extent permitted by law, Bidder shall pay on behalf of Owner and Owner's directors, officers, and employees from all claims, causes of action, losses, liabilities, and expenses (including reasonable attorney's fees) for personal loss, injury, or death to persons (including but not limited to Bidder's employees) and loss, damage to or destruction of Owner's property or the property of any other person or entity (including but not limited to Bidder's property) in any manner arising out of or connected with the Contract, or the materials or equipment supplied or services performed by Bidder, its subcontractors and suppliers of any tier. But nothing herein shall be construed as making Bidder liable for any injury, death, loss, damage, or destruction caused by the sole negligence of Owner, otherwise this provision shall apply to any negligence or condition caused by the Owner.''

(c) If the alternative indemnification provision in paragraph (a) or (b) of this section is chosen by the borrower, the language of paragraph (a) or (b) of this section would be inserted in lieu of subsection (i) of the section indicated in the RUS standard construction contract forms as follows:

RUS form No.	Title	Desiganted section
200	Construction Contract—Generating	Article IV, Section 1(c).
201	Right-of-Way Clearing Contract	Article IV, Section 1(e).
203	Transmission System Right-of-Way Clearing Contract	Article IV, Section 1(f).
257	Contract to Construct Buildings	Article IV, Section 1(b).
764	Substation and Switching Station Erection Contract	Article IV, Section 1(f).
786	Electric System Communications and Control Equipment Line	Article IV, Section 1(c).
790	Distribution Line Extension Construction Contract (labor & materials).	Article IV, Section 1(f).
792	Distribution Line Extension Construction Contract (labor only)	Article IV, Section 1(f).
830	Electric System Construction Contract (labor & material)	Article IV, Section 1(f).
831	Electric Transmission Construction Contract (labor & material)	Article IV, Section 1(f).

(d) In RUS Forms 201, 790, and 792, the word ''Contractor'' would replace the word ''Bidder'' in the alternative indemnification clause in paragraph (a) or (b) of this section.

(e) In RUS Form 786, the word ''Seller'' would replace the word ''Bidder'' and the word ''Purchaser'' would replace the word ''Owner'' in the alternative indemnification clause in paragraph (a) or (b) of this section.

§§ 1726.256—1726.299 [Reserved]

Subpart I—RUS Standard Forms

§1726.300 List of RUS standard contracting forms for electric systems.

The following is a list of the current RUS standard contracting forms that RUS has prepared for use by electric borrowers when purchasing materials and equipment and constructing facilities with a RUS loan or loan guarantee. Copies of the contract forms are available from the sources indicated in the listing. A notice of any change in these contract forms will be published in the FEDERAL REGISTER.

RUS ELECTRIC PROGRAM STANDARD CONTRACT FORMS

RUS form No.	Issue date	Title	Purpose	Source of copies [1]
168b	2–95	Contractor's bond	Used in RUS Forms 200, 201, 203, 257, 764, 786, 790, 792, 830 & 831	In respective contract form.
168c	2–95	Contractor's bond (less than $1 million)	In lieu of RUS Form 168b, used when contractor's surety has accepted a Small Business.	RUS.
172	9–58	Certificate of Inspection Contract Construction	Administration guarantee—Used to notify RUS that construction is ready for inspection.	RUS.
173	3–55	Materials contract	Used for distribution, transmission, and general plant material purchases	RUS.
180	2–95	Construction Contract Amendment	Used to amend distribution line construction contracts	RUS.
181	2–95	Certificate of Completion Contract Construction for Buildings.	Used for the closeout of RUS Form 257	RUS.
187	2–95	Certificate of Completion Contract Construction	Used in RUS Forms 200, 203, 764, 786, 830, and 831	In respective contract form.
198	2–95	Equipment Contract Construction Contract—Generating.	Used for equipment purchases	RUS.
200	2–95	Construction Contract Generating	Used for generating plant construction or for the furnishing and installation of major items of equipment.	RUS.
201	2–95	Right-of-Way Clearing Contract	Used for distribution right-of-way clearing work which is to be performed separate from line construction.	RUS.
203	2–95	Transmission System Right-of-Way Clearing Contract.	Used for transmission line right-of-way clearing work which is to be performed separate from line construction.	RUS.
213	2–95	Certificate (''Buy American'')	Used to document compliance with the ''Buy American'' requirement	RUS.
219	10–88	Inventory of Work Orders	Used to encumber funds	RUS.
224	2–95	Waiver and Release of Lien	Used in RUS Forms 200, 203, 764, 786, 830, and 831	In respective contract form.
231	2–95	Certificate of Contractor	Used in RUS Forms 200, 203, 764, 786, 830, and 831	In respective contract form.
238	2–95	Construction or Equipment Contract Amendment.	Used to amend contracts except for distribution line construction contracts.	RUS.
251	2–95	Material Receipt	Used in RUS Forms 764, 830, and 831	In respective contract form.
254	2–95	Construction Inventory	Used with the closeout of RUS Forms 203, 764, 830, and 831	RUS.
257	2–95	Contract to Construct Buildings	Used to construct headquarters buildings and other structure construction.	GPO.[2]
270	7–70	Equal Opportunity Addendum	Addendum to contracts not having current equal opportunity provisions	RUS
274	6–81	Bidder's Qualifications	Used to document Bidder's Qualifications	RUS.
282	11–53	Subcontract	Used for subcontracting	RUS.
307	2–95	Bid Bond	Used In RUS Forms 200, 203, 257, 764, 830 and 831	In respective contract form.
458	3–55	Material Contract	Used to obtain generating plant material and equipment purchases over $10,000, not requiring acceptance tests at the project site.	RUS.
764	2–95	Substation and Switching Station Erection Contract.	Used to construct substations and switching stations	RUS.
786	2–95	Electric System Communications and Control Equipment Contract.	Used for delivery and installation of equipment for system communications.	RUS.

790	2–95	Distribution Line Extension Construction Contract (labor & materials).	Used for limited distribution construction accounted for under work order procedure.	GPO.[2]
792	2–95	Distribution Line Extension Construction Contract (labor only).	Used for limited distribution construction accounted for under work order procedure.	GPO.[2]
792b	2–95	Certificate of Construction and Indemnity Agreement.	Used in RUS Forms 201, 790, and 792	In respective contract form.
792c	2–95	Supplemental Contract for Additional Project	Used in RUS Forms 201, 790, and 792	In respective contract form.
830	2–95	Electric System Construction Contract (labor & material).	Used for distribution and/or transmission project construction	GPO.[2]
831	2–95	Electric Transmission Construction Contract (labor & material).	Used for transmission project construction	GPO.[2]

Notes:

[1] A single copy of the form will be furnished by RUS upon request. Additional copies may be duplicated or reproduced. Requests for copies should be sent to: Director, Administrative Services Division, U.S. Department of Agriculture, Rural Utilities Service, Washington, DC 20250.

[2] Requests for copies should be submitted to the Superintendent of Documents, U.S. Government Printing Office, Washington, DC 20402. Telephone orders may also be placed, using Mastercard or Visa, by calling (202) 512–1800.

§ 1726.301 Use of printed forms.

If a RUS contract form is required by this part, the borrower shall use the form in the format available from RUS or GPO (photocopying or other exact reproduction is acceptable.) The contract forms are not to be retyped, changed, modified or altered in any manner not specifically authorized in this part or approved by RUS in writing. Any modifications approved by RUS must be clearly shown so to indicate that such are different from the standard form. Electronic reproduction is acceptable for RUS Forms 251 and 254 only.

§ 1726.302 RUS approved forms of contract.

If a specific RUS contract form is required by a particular section of this part, the borrower shall use that form without changes or modifications or alterations unless, prior to issuing the bid package to bidders, RUS has specifically approved any such changes to that form for that borrower, nor shall any change be made to the form by amendment of an executed contract without prior RUS approval. Any proposed changes shall not relieve the contractor or the borrower of the basic responsibilities required by the standard RUS contract form, and, shall not alter any terms and conditions required by law. Changes permitted or required by subpart H of this part or by part 1788, RUS Fidelity and Insurance Requirements for Electric and Telephone Borrowers, of this chapter are approved by RUS under the circumstances indicated.

§ 1726.303 Interest on overdue accounts.

Certain RUS contract forms contain a provision concerning payment of interest on overdue accounts. Prior to issuing the invitation to bidders, the borrower must insert an interest rate equal to the lowest ''Prime Rate'' listed in the ''Money Rates'' section of the Wall Street Journal on the date such invitation to bid is issued. If no prime rate is published on that date, the last such rate published prior to that date must be used. The rate must not, however, exceed the maximum rate allowed by any applicable state law.

§§ 1726.304—1726.309 [Reserved]

§ 1726.310 Contractor's bond, RUS Form 168b.

The bond form in this section shall be used when a Contractor's Bond is required by RUS Forms 200, 201, 203, 257, 764, 786, 790, 792, 830, or 831 unless the contractor's surety has accepted a Small Business Administration guarantee and the contract is for one million dollars or less.

CONTRACTOR'S BOND

1. Know all men that we, _____, as Principal, and _____, as Surety, are held and firmly bound unto _____ (hereinafter called the ''Owner'') and unto the United States of America (hereinafter called the ''Government'') and unto all persons, firms and corporations who or which may furnish materials for or perform labor on a Rural Utilities Service Project known as Project _____ and to their successors and assigns, in the penal sum of _____ dollars ($_____), as hereinafter set forth and for the payment of which sum well and truly to be made we bind ourselves, our executors, administrators, successors and assigns jointly and severally by these presents. Said Project is described in a certain construction contract (hereinafter called the ''Construction Contract'') between the Owner and the Principal, dated _____, 19___, pursuant and subject to a certain loan contract (hereinafter called the ''Loan Contract'') between the Owner and the Government, acting through the Administrator of the Rural Utilities Service (hereinafter called the ''Administrator'').

2. The condition of this obligation is such that if the Principal shall well and truly perform and fulfill all the undertakings, covenants, terms, conditions and agreements of the Construction Contract and any amendments thereto, whether such amendments are for additions, decreases, or changes in materials, their quantity, kind or price, labor costs, mileage, routing or any other purpose whatsoever, and whether such amendments are made with or without notice to the Surety, and shall fully indemnify and save harmless the Owner and the Government from all costs and damages which they, or either of them, shall suffer or incur by reason of any failure so to do, and shall fully reimburse and repay the Owner and the Government for all outlay and expense which they, or either of them shall incur in making good any such failure of performance on the part of the Principal, and shall promptly make payment to all persons working on or supplying labor or materials for use in the construction of the Project contemplated in

the Construction Contract and any amendments thereto, in respect of such labor or materials furnished and used therein, to the full extent thereof, and in respect of such labor or materials furnished but not so used, to the extent of the quantities estimated in the Construction Contract and any amendments thereto to be required for the construction of the Project, and shall well and truly reimburse the Owner and the Government, as their respective interests may appear, for any excess in cost of construction of said Project over the cost of such construction as provided in the Construction Contract and any amendments thereto, occasioned by any default of the Principal under the Construction Contract and any amendments thereto, then this obligation shall be null and void, but otherwise shall remain in full force and effect.

3. It is expressly agreed that this bond shall be deemed amended automatically and immediately, without formal and separate amendments hereto, upon any amendment to the Construction Contract, so as to bind the Principal and the Surety to the full and faithful performance of the Construction Contract as so amended, provided only that the total amount of all increases in the cost of construction shall not exceed 20 percent of the amount of the maximum price set forth in the Construction Contract. The term ''Amendment,'' wherever used in this bond, and whether referring to this bond, the Construction Contract or the Loan Contract shall include any alteration, addition, extension, modification, amendment, rescission, waiver, release or annulment, of any character whatsoever.

4. It is expressly agreed that any amendment which may be made by agreement or otherwise between the Principal and the Owner in the terms, provisions, covenants and conditions of the Construction Contract, or in the terms, provisions, covenants and conditions of the Loan Contract (including, without limitation, the granting by the Administrator to the Owner of any extension of time for the performance of the obligations of the Owner under the Loan Contract or the granting by the Administrator or the Owner to the Principal of any extension of time for the performance of the obligations of the Principal under the Construction Contract, or the failure or refusal of the Administrator or the Owner to take any action, proceeding or step to enforce any remedy or exercise any right under either the Construction Contract or the Loan Contract, or the taking of any action, proceeding or step by the Administrator or the Owner, acting in good faith upon the belief that the same is permitted by the provisions of the Construction Contract or the Loan Contract) shall not in any way release the Principal and the Surety, or either of them or their respective executors, administrators, successors or assigns, from liability hereunder. The Surety hereby acknowledges receipt of notice of any amendment, indulgence or forbearance, made, granted or permitted.

5. This bond is made for the benefit of all persons, firms and corporations who or which may furnish any materials or perform any labor for or on account of the construction to be performed under the Construction Contract and any amendments thereto, and they, and each of them, are hereby made obligees hereunder with the same force and effect as if their names were written herein as such, and they and each of them may sue hereon.

In witness whereof, the undersigned have caused this instrument to be executed and their respective corporate seals to be affixed and attested by their duly authorized representatives this _____ day of _____, 19___.

Principal _____ (Seal)
By _____
Attest: _____ Secretary
Surety_____ (Seal)
By _____
Attest: _____ Secretary
_____ Address of Surety's Home Office
By _____ Resident Agent of Surety

Signatures: The Contractor's Bond must be signed with the full name of the Contractor. If the Contractor is a partnership the Contractor's Bond must be signed in the partnership name by a partner. If the Contractor is a corporation the Contractor's Bond must be signed in the corporate name by a duly authorized officer and the corporate seal affixed and attested by the Secretary of the corporation. A typewritten copy of all such names and signatures shall be appended.

Power of Attorney: The Contractor's Bond must be accompanied by a power of attorney authorizing execution on behalf of the Surety and, in jurisdictions so requiring should be countersigned by a duly authorized resident agent of the Surety.

[End of clause]

§1726.311 Contractor's bond, RUS Form 168c.

The bond form in this section shall be used when a Contractor's Bond is required by RUS Form 200, 201, 203, 257, 764, 786, 790, 792, 830, or 831 and the contractor's surety has accepted a Small Business Administration guarantee and the contract is for one million dollars or less.

CONTRACTOR'S BOND

(Use only when contract is less than $1 million and Surety has accepted an SBA (Small Business Administration) Guarantee)

1. Know all men that we, _____, as Principal, and _____, as Surety, are held and firmly bound unto _____ (hereinafter called the ''Owner'') and unto the United States of America (hereinafter called the ''Government'') and unto all persons, firms and corporations who or which may furnish materials for or perform labor on a Rural Utilities Service Project known as Project _____ and to their successors and assigns, in the penal sum of _____ dollars ($_____), as hereinafter set forth and for the payment of which sum well and truly to be made we bind ourselves, our executors, administrators, successors and assigns jointly and severally by these presents. Said Project is described in a certain construction contract (hereinafter called the ''Construction Contract'') between the Owner and the Principal, dated _____, 19___, pursuant and subject to a certain loan contract (hereinafter called the ''Loan Contract'') between the Owner and the Government, acting through the Administrator of the Rural Utilities Service (hereinafter called the ''Administrator'').

2. The condition of this obligation is such that if the Principal shall well and truly perform and fulfill all the undertakings, covenants, terms, conditions and agreements of the Construction Contract and any amendments thereto, whether such amendments are for additions, decreases, or changes in materials, their quantity, kind or price, labor costs, mileage, routing or any other purpose whatsoever, and whether such amendments are made with or without notice to the Surety, and shall fully indemnify and save harmless the Owner and the Government from all costs and damages which they, or either of them, shall suffer or incur by reason of any failure so to do, and shall fully reimburse and repay the Owner and the Government for all outlay and expense which they, or either of them shall incur in making good any such failure of performance on the part of the Principal, and shall promptly make payment to all persons working on or supplying labor or materials for use in the construction of the Project contemplated in the Construction Contract and any amendments thereto, in respect of such labor or materials furnished and used therein, to the full extent thereof, and in respect of such labor or materials furnished but not so used, to the extent of the quantities estimated in the Construction Contract and any amendments thereto to be required for the construction of the Project, and shall well and truly reimburse the Owner and the Government, as their respective interests may appear, for any excess in cost of construction of said Project over the cost of such construction as provided in the Construction Contract and any amendments thereto, occasioned by any default of the Principal under the Construction Contract and any amendments thereto, then this obligation shall be null and void, but otherwise shall remain in full force and effect.

3. Provided, that the liability of the Principal and Surety hereunder to the Government shall be subject to the same limitations and defenses as may be available to them against a claim hereunder by the Owner, provided, however, that the Government may, at its option, perform any obligations of the Owner required by the contract.

4. It is expressly agreed that this bond shall be deemed amended automatically and immediately, without formal and separate amendments hereto, upon any amendment to the Construction Contract, so as to bind the Principal and the Surety to the full and faithful performance of the Construction Contract as so amended, provided only that the total amount of all increases in the cost of construction shall not exceed 20 percent of the amount of the maximum price set forth in the Construction Contract. The term ''Amendment,'' wherever used in this bond, and whether referring to this bond, the Construction Contract or the Loan Contract shall include any alteration, addition, extension, modification, amendment, rescission, waiver, release or annulment, of any character whatsoever.

5. It is expressly agreed that any amendment which may be made by agreement or otherwise between the Principal and the Owner in the terms, provisions, covenants and conditions of the Construction Contract, or in the terms, provisions, covenants and conditions of the Loan Contract (including, without limitation, the granting by the Administrator to the Owner of any extension of time for the performance of the obligations of the Owner under the Loan Contract or the granting by the Administrator or the Owner to the Principal of any extension of time for the performance of the obligations of the Principal under the Construction Contract, or the failure or refusal of the Administrator or the Owner to take any action, proceeding or step to enforce any remedy or exercise any right under either the Construction Contract or the Loan Contract, or the taking of any action, proceeding or step by the Administrator or the Owner, acting in good faith upon the belief that the same is permitted by the provisions of the Construction Contract or the Loan Contract) shall not in any way release the Principal and the Surety, or either of them or their respective executors, administrators, successors or assigns, from liability hereunder. The Surety hereby acknowledges receipt of notice of any amendment, indulgence or forbearance, made, granted or permitted.

6. This bond is made for the benefit of all persons, firms and corporations who or which may furnish any materials or perform any labor for or on account of the construction to be performed under the Construction

Contract and any amendments thereto. Provided, that beneficiaries or claimants hereunder shall be limited to the subcontractors, and persons, firms and corporations having a direct contract with the Principal or its subcontractors.

7. Provided, further, that no suit or action shall be commenced hereunder by any person, firm, or corporation who performed work or labor or who furnished materials for the project: (a) Unless such person, firm, or corporation, other one having a direct contract with the Principal (or with the Government in the event the Government is performing the obligation of the Owner), shall have given detailed written notice of claim to: The Principal, and the Owner, within ninety (90) days after such person, firm, or corporation did or performed the last of the work or labor, or furnished the last of the materials for which such claim is made. (b) After the expiration of one (1) year following the date on which Principal ceased work on said contract, it being understood, however, that if any limitation embodied in the Bond is prohibited by any law controlling the construction hereof, such limitation shall be deemed to be amended so as to equal to the minimum period of limitation permitted by such law.

In witness whereof, the undersigned have caused this instrument to be executed and their respective corporate seals to be affixed and attested by their duly authorized representatives this _____ day of _____, 19___.

Principal _____ (Seal)
By _____
Attest: _____ Secretary
Surety _____ (Seal)
By _____
Attest: _____ Secretary
_____ Address of Surety's Home Office
By _____ Resident Agent of Surety

Signatures: The Contractor's Bond must be signed with the full name of the Contractor. If the Contractor is a partnership the Contractor's Bond must be signed in the partnership name by a partner. If the Contractor is a corporation the Contractor's Bond must be signed in the corporate name by a duly authorized officer and the corporate seal affixed and attested by the Secretary of the corporation. A typewritten copy of all such names and signatures shall be appended.

Power of Attorney: The Contractor's Bond must be accompanied by a power of attorney authorizing execution on behalf of the Surety and, in jurisdictions so requiring should be countersigned by a duly authorized resident agent of the Surety.

[End of clause]

§1726.312 Construction contract amendment, RUS Form 180.

The amendment form in this section shall be used when required by this part.

CONSTRUCTION CONTRACT AMENDMENT

Instructions—Submit 3 copies of this form & 3 copies of all attachments to Administrator, Rural Utilities Service, U.S. Department of Agriculture, Washington, DC 20250.

1. Project Designation _____
2. Amendment No. _____
3. Date _____
4. Details of changes are tabulated on sheet _____ to _____ attached and are part of this amendment.
5. The following changes in Construction Contract Number _____ dated _____, 19___ are hereby submitted for your approval.
6. Data pertinent to the original contract and amendments including this amendment are as follows (decrease to be preceded by (−) minus sign):

	Miles	Consumers		Price
		Signed	Potential	
Original Contract Amendment No. 1 Amendment No. 2 Amendment No. 3 Amendment No. 4 Amendment No. 5 Amendment No. 6				
Total with this Amendment				

7. Changes in materials furnished by Owner: This amendment provides for an increase/decrease of $_____ in the amount of materials furnished by Owner. The details of changes in items, quantities, or prices are tabulated on sheet _____ to _____ attached and made a part hereof.
8. Bond extension attached ___ Yes ___ No
9. The construction period will be changed _____ days.
10. New counties (if any) _____
11. Description and reason for change: _____ This amendment providing for an increase/decrease of $_____ in the amount of said construction contract is submitted pursuant to the provisions thereof and pursuant to the loan contract between the United States of America and the undersigned borrower. You are hereby authorized to approve this amendment either in whole or in part and to delete such items as do not meet with your approval. To the extent the items hereof are approved by you the construction contract shall be amended.

Accepted
_____ Contractor
By _____ President-Owner-Partner (Strike out inapplicable title. If signed by other than above, power of attorney should be attached or on file with RUS.)
_____ Date
_____ Owner
By _____ President-Board of Directors
_____ Date
Approved
_____ Date
_____ Engineer for the Borrower
Details of Contract Amendment
Item No. _____
Assembly Unit Designation _____
Quantity Previously Approved _____
Net Change Number Of Units _____
Contract Amended To Read (Show quantities and prices as revised by this amendment):
Number of Units _____
Unit Price:
Labor _____
Material _____
Total _____
Total Price _____
Total Increase Price _____
Total Decrease _____
Totals _____
Net Total _____

[End of clause]

§1726.313 Certificate of completion, contract construction for buildings, RUS Form 181.

The closeout form in this section shall be used when required by this part.

CERTIFICATE OF COMPLETION; CONTRACT CONSTRUCTION FOR BUILDINGS

_____ (Project Designation)

I, the undersigned Architect of the above-designated Rural Utilities Service Project, hereby certify that:

1. The construction provided for pursuant to Construction Contract No. _____ dated _____ 19___, including all approved amendments, (hereinafter called the ''Project'') between _____(''Owner'') and _____ (''Contractor'') has been completed as of _____ 19___, and is in all respects in strict compliance with the provisions of the Loan Contract and the Construction Contract, including the Plans and Specifications and all modifications thereto.

2. To the best of my knowledge, payment in full has been made to all persons who have furnished labor for the Project.

3. The Contractor has, to the best of my knowledge, obtained valid releases of lien from all Manufacturers, materialmen, and subcontractors that furnished materials or services or both which were employed by the Contractor in the performance of the Construction Contract, and that such releases have been delivered to the Owner.

4. All defects in workmanship and materials reported during the period of construction of the Project have been corrected.

5. The final Contract Price of the Project as completed is _____ dollars ($_____).

_____ Date
_____ Representative of Architect
_____ Title
Acceptance
_____ Date
_____ Representative of Contractor
_____ Title
_____ Date
_____ Name of Owner
_____ President, Board of Directors

[End of clause]

§1726.314 Certificate of completion, contract construction, RUS Form 187.

The closeout form in this section shall be used when required by this part.

CERTIFICATE OF COMPLETION; CONTRACT CONSTRUCTION

To: Administrator
Rural Utilities Service
U.S. Department of Agriculture Washington, D.C. 20250
_____ (Project Designation)

I, the undersigned Engineer of the above-designated Rural Utilities Service Project do hereby certify that:

1. The construction provided for pursuant to Construction Contract No. _____ dated

_____ 19____, including all approved amendments, (hereinafter called the ''Project'') between _____ (''Owner'') and _____ (''Contractor'') has been completed as of _____ 19____, and is in all respects in strict compliance with the provisions of the Loan Contract and the Construction Contract, including all Plans, specifications, maps, and drawings and all modifications thereto.

2. Payment in full has been made to all persons who have furnished labor for the Project.

3. The Contractor has obtained valid releases of lien from all persons, firms and/or corporations furnishing materials, supplies, and appliances which were employed by the Contractor in the performance of the Construction Contract, and that such releases have been delivered by the Contractor to the Owner.

4. If applicable, the Final Inventory attached hereto and made a part hereof is a complete and accurate summary of all units of construction in the Project and of all work performed in accordance with the Construction Contract.

5. If applicable, the staking sheets and tabulation of staking sheets upon which the Final Inventory is based show the accurate location, number, and kind of all units of construction of the project and show all work performed in accordance with the Construction Contract.

6. All defects in workmanship and materials reported during the period of construction of the Project have been corrected.

7. The total cost of the Project as completed is _____ dollars ($_____). The Project consists of facilities shown on the Statement of Construction which is true and correct and which is attached hereto and made a part hereof.

Dated this _____ day of _____, 19____.

_____ Name of Engineer

By _____

_____ Title

_____ Date

Approved as to Items 1 and 6 above:

_____ RUS Field Engineer

We, the undersigned Owner and Contractor, do hereby certify that:

1. The Project has been completed in accordance with the provisions of the Construction Contract, dated _____ 19____, provided, however, that acceptance of the Project by the Owner shall not be deemed to relieve the Contractor of its obligations contained in the Construction Contract with respect to defective workmanship or, materials discovered within one year after the date of completion.

2. If applicable, the Final Inventory attached hereto and made a part hereof is a complete and accurate summary of all units of construction in the Project and of work performed in accordance with the Construction Contract.

_____ Owner

By _____ President

_____ Date

_____ Name of Contractor

By _____

_____ Title

_____ Date

[End of clause]

§ 1726.315 Equipment contract, RUS Form 198.

The contract form in this section shall be used when required by this part.

EQUIPMENT CONTRACT

Notice and Instructions to Bidders

1. Sealed proposals for the furnishing and delivery f.o.b. _____ of equipment for the _____ (hereinafter called the ''Owner'') which is to be part of the project known as _____ will be received by the Owner on or before _____ o'clock, ___ M., _____ 19____, at _____ at which time and place the proposals will be publicly opened and read. Any proposal received subsequent to the time specified will be promptly returned to the Bidder unopened.

2. The Plans and Specifications, together with all necessary forms and other documents for bidders may be obtained from the Owner or from the Engineer, _____ at the latter's office at _____. The Plans and Specifications may be examined at the office of the Owner or at the office of the Engineer. A copy of the loan contract (if the Project is to be financed in whole or in part, pursuant to a loan contract) between the Owner and the United States of America acting through the Administrator of the Rural Utilities Service (hereinafter called the ''Administrator'') and of the loan contract between the Owner and any other lender, may be examined at the office of the Owner.

3. Proposals and all supporting instruments must be submitted on the forms furnished by the Owner and must be delivered in a sealed envelope addressed to the Owner. The name and address of the Bidder and the date and hour of the opening of bids must appear on the envelope in which the Proposal is submitted. Proposals must be filled in in ink or typewriter. No alterations or interlineations will be permitted, unless made before submission and initialed and dated.

4. Prior to the submission of the Proposal, the Bidder shall make and shall be deemed to have made a careful examination of the Plans and Specifications and forms of Equipment Contract on file with the Secretary of the Owner and with the Engineer, and all

other matters, including transportation facilities, that may affect the cost and the time of completion of the work.

5. Proposals will be accepted only from those prequalified bidders invited by the Owner to submit a proposal.

6. In estimating the lowest cost to the Owner as one of the factors in deciding the award of the Contract, the Owner will consider, in addition to the price quoted in the Proposals, the following: _____.

7. The Contract, when executed, shall be deemed to include the entire agreement between the parties thereto, and the Bidder shall not claim any modification thereof resulting from any representation or promise made at any time by any officer, agent, or employee of the Owner or by any other person.

8. The Owner reserves the right to waive minor irregularities or minor errors in any Proposal if it appears to the Owner that such irregularities or errors were made through inadvertence. Any such irregularities or errors so waived must be corrected on the Proposal in which they occur prior to the execution of any contract which may be awarded thereon.

9. The Owner reserves the right to reject any or all Proposals.

_____ Owner

By _____

_____ Date

Proposal

To: _____ (hereinafter called the ''Owner''.)

1. The undersigned (hereinafter called the ''Bidder'') hereby proposes to furnish and deliver the equipment (hereinafter called the ''Equipment'') described in the Plans and Specifications attached hereto and made a part hereof for the following prices: Item _____.

2. The prices of Equipment set forth herein shall include the cost of delivery to _____. Such delivery shall be made within _____ days after the receipt of the written order of the Owner.

3. This Proposal is made pursuant to the provisions of the Notice and Instructions to Bidders, if any shall be attached hereto, and the Bidder agrees to the terms and conditions thereof.

4. The Bidder warrants the accuracy of all statements contained in the Bidder's Qualifications, if any shall be submitted, and agrees that the Owner shall rely upon such accuracy as a condition of the Contract in the event that this Proposal is accepted.

5. The Bidder warrants that this Proposal is made in good faith and without collusion or connection with any other person or persons bidding for the same work.

6. The Bidder agrees that, in the event this Proposal is accepted, it will execute a Contract in the form attached hereto.

7. The Bidder warrants that the Equipment will conform to the performance data and guarantees which are attached hereto and by this reference made a part hereof.

8. If, in submitting this Proposal, the Bidder has made any change in the form of Proposal or Contract furnished by the Owner, the Bidder understands that the Owner and the Administrator may evaluate the effect of such change as they see fit or they may exclude the Proposal from consideration in determining the award of the Contract.

9. The Bidder represents that:

It has _____, does not have _____, 100 or more employees, and if it has, that it has _____, has not _____, furnished the Equal Employment Opportunity-Employers Information Report EEO–1, Standard Form 100, required of employers with 100 or more employees pursuant to Executive Order 11246 and Title VII of the Civil Rights Act of 1964.

The Bidder agrees that it will obtain, prior to the award of any subcontract for more than $10,000 hereunder to a subcontractor with 100 or more employees, a statement, signed by the proposed subcontractor, that the proposed subcontractor has filed a current report on Standard Form 100.

The Bidder agrees that if it has 100 or more employees and has not submitted a report on Standard Form 100 for the current reporting year and that if this contract will amount to more than $10,000, the Bidder will file such report, as required by law, and notify the Owner in writing of such filing prior to the Owner's acceptance of this Proposal.

10. The Bidder certifies that it does not maintain or provide for its employees any segregated facilities at any of its establishments, and that it does not permit its employees to perform their services at any location, under its control, where segregated facilities are maintained. The Bidder certifies further that it will not maintain or provide for its employees any segregated facilities at any of its establishments, and that it will not permit its employees to perform their services at any location, under its control, where segregated facilities are maintained. The Bidder agrees that a breach of this certification is a violation of the Equal Opportunity Clause in this contract. As used in this certification, the term ''segregated facilities'' means any waiting rooms, work areas, restrooms and washrooms, restaurants and other eating areas, timeclocks, locker rooms and other storage or dressing areas, parking lots, drinking fountains, recreation or entertainment areas, transportation, and housing facilities provided for employees which are segregated by explicit directive or are in fact segregated on the basis of race, color, religion, or national origin, because of habit, local custom, or otherwise. The Bidder agrees that (except where it has obtained identical certifications from proposed subcontractors for specific time periods) it will

obtain identical certifications from proposed subcontractors prior to the award of subcontracts exceeding $10,000 which are not exempt from the provisions of the Equal Opportunity Clause, and that it will retain such certifications in its files.

_____ Name of Bidder
_____ Address of Bidder
By _____
_____ Title of Officer
_____ Date

Equipment Contract

Agreement made _____ 19___, between _____ (hereinafter called the ''Purchaser'') and _____ (hereinafter called the ''Seller''), a corporation organized and existing under the laws of the State of _____.

Whereas, the Purchaser desires to purchase and the Seller desires to sell the equipment described herein for the project financed in part or whole by a loan to the Purchaser from the United States of America, acting through the Administrator of the Rural Utilities Service (hereinafter called the ''Administrator'') which project is designated _____.

Now therefore, in consideration of the mutual undertakings herein contained, the parties hereto agree as follows:

Section 1—Acceptance of Proposal

(a) The Purchaser accepts the Proposal which is attached hereto and by this reference made a part hereof, and the parties hereto agree that the Seller shall sell and deliver to the Purchaser and the Purchaser shall purchase and receive from the Seller the equipment (hereinafter called the ''Equipment'') described in the Proposal upon the terms and conditions herein stated.

(b) The prices set forth in the Proposal include the cost of delivery to _____.

(c) The prices set forth in the Proposal do not include any sums which are or may be payable by the Seller on account of taxes imposed by any taxing authority upon the sale, purchase or use of the Equipment. If any such tax is applicable to the sale, purchase or use of the Equipment hereunder, the amount thereof shall be added to the purchase price and paid by the Purchaser.

Section 2—Delivery

The Seller shall deliver the Equipment within _____ days after receipt of the written order or orders of the Purchaser. The time for delivery shall be extended for the period of any reasonable delay due exclusively to causes beyond the control and without the fault of the Seller, including, but not limited to, acts of God, fires, strikes, and floods.

Section 3—Payment

Upon the shipment of any Equipment hereunder, the Seller shall submit to the Purchaser a detailed statement of the Equipment shipped. The Purchaser shall, upon receipt of the Equipment, pay the Seller ninety percent (90%) of the contract price of the Equipment. When the Equipment has been installed, placed in satisfactory operation, tested and accepted by the Purchaser, the Purchaser shall make final payments therefor to the Seller; provided, however, such final payment shall be made not later than one-hundred eighty (180) days after delivery of the Equipment, unless such acceptance by the Purchaser shall be withheld because of the fault of the Seller.

Section 4—Defective Material and Workmanship

(a) All Equipment furnished hereunder shall be subject to the inspection, tests, and approval of the Purchaser and the Administrator and the Seller shall furnish all information required concerning the nature of source of any Equipment and provide adequate facilities for testing and inspecting the Equipment at the plant of the Seller.

(b) The Equipment furnished hereunder shall become the property of the Purchaser upon delivery, provided, however, that the Purchaser or the Administrator, within one year after delivery or within the period for which the Equipment is guaranteed, whichever is longer, may reject any Equipment which does not comply with the Specifications attached hereto and made a part hereof or with the guarantees, if any, of the Seller and the manufacturer. Upon any such rejection, the Seller shall repair or replace such defective Equipment within a reasonable time after notice in writing from the Purchaser and in the event of failure by the Seller so to do, the Purchaser may make such replacement and the cost and expense thereof shall be paid by and recoverable from the Seller.

Section 5—Miscellaneous

(a) All manufacturers' guarantees of Equipment, if any, shall be transferred and assigned to the Purchaser upon delivery of any Equipment and before final payment is made for such Equipment. Such guarantees shall be in addition to those required of the Seller by other provisions of this Contract.

(b) The Seller shall hold harmless and indemnify the Purchaser from any and all claims, suits, and proceedings for infringement of any patent or patents covering Equipment purchased hereunder.

(c) In the performance of this contract there shall be furnished only such unmanufactured articles, materials, and supplies as have been mined or produced in the United States, Mexico, or Canada, and only such

manufactured articles, materials, and supplies as have been manufactured in the United States substantially all from articles, materials, or supplies mined, produced or manufactured, as the case may be, in the United States, Mexico, or Canada; provided that other articles, materials, or supplies may be used in the event and to the extent that the Administrator shall expressly in writing authorize such use pursuant to the provisions of the Rural Electrification Act of 1938, being Title IV of Public Resolution No. 122, 75th Congress, approved June 21, 1938. The Seller agrees to submit to the Purchaser such certificates with respect to compliance with the foregoing provision as the Administrator from time to time may require.

(d) During the performance of this contract, the Seller agrees as follows:

(1) The Seller will not discriminate against any employee or applicant for employment because of race, color, religion, sex, or national origin. The Seller will take affirmative action to ensure that applicants are employed, and that employees are treated during employment without regard to their race, color, religion, sex, or national origin. Such action shall include, but not be limited to, the following: Employment, upgrading, demotion or transfer; recruitment or recruitment advertising; layoff or termination; rates of pay or other forms of compensation; and selection for training, including apprenticeship. The Seller agrees to post in conspicuous places, available to employees and applicants for employment, notices to be provided setting forth the provisions of this nondiscrimination clause.

(2) The Seller will, in all solicitations or advertisements for employees placed by or on behalf of the Seller, state that all qualified applicants will receive consideration for employment without regard to race, color, religion, sex, or national origin.

(3) The Seller will send to each labor union or representative of workers with which it has a collective bargaining agreement or other contract or understanding, a notice to be provided advising the said labor union or workers' representative of the Seller's commitments under this section, and shall post copies of the notice in conspicuous places available to employees and applicants for employment.

(4) The Seller will comply with all provisions of Executive Order 11246 of September 24, 1965, and of the rules, regulations and relevant orders of the Secretary of Labor.

(5) The Seller will furnish all information and reports required by Executive Order 11246 of September 24, 1965, and by rules, regulations and orders of the Secretary of Labor, or pursuant thereto, and will permit access to its books, records and accounts by the administering agency and the Secretary of Labor for purposes of investigation to ascertain compliance with such rules, regulations and orders.

(6) In the event of the Seller's noncompliance with the nondiscrimination clauses of this contract or with any of the said rules, regulations or orders, this contract may be cancelled, terminated or suspended in whole or in part and the Seller may be declared ineligible for further Government contracts or federally assisted construction contracts in accordance with procedures authorized in Executive Order 11246 of September 24, 1965, and such other sanctions may be imposed and remedies invoked as provided in the said Executive Order or by rule, regulation or order of the Secretary of Labor, or as otherwise provided by law.

(7) The Seller will include the portion of the sentence immediately preceding paragraph (1) and the provisions of paragraphs (1) through (7) in every subcontract or purchase order unless exempted by rules, regulations or orders of the Secretary of Labor issued pursuant to Section 204 of Executive Order 11246 of September 24, 1965, so that such provisions will be binding upon each subcontractor or vendor. The Seller will take such action with respect to any subcontract or purchase order as the administering agency may direct as a means of enforcing such provisions, including sanctions for noncompliance: Provided, however, that in the event a Seller becomes involved in, or is threatened with, litigation with a subcontractor or vendor as a result of such direction by the administering agency, the Seller may request the United States to enter into such litigation to protect the interest of the United States.

(e) Each and all of the covenants and agreements herein contained shall extend to and be binding upon the successors and assigns of the parties hereto provided, however, that the Seller shall not assign this contract or any part hereof without approval in writing of the Purchaser and the Administrator, and further that the Seller shall not enter into any contract with any person, firm or corporation for the performance of the Seller's obligations hereunder, or any part thereof, without the approval in writing of the Purchaser.

(f) This contract shall become effective only upon approval by the Administrator. Neither this contract nor any provision thereof shall be modified, amended, rescinded, waived, or terminated without the approval in writing of the Administrator. Amendments executed on RUS Form 238 are not subject to approval of the Administrator, except that when a contract amendment along with all previous amendments to this contract cause the total amended contract price to exceed 120 percent of the original contract price, as stated in the Seller's proposal and accepted by the Owner, that amendment and all subsequent amendments

to this contract shall be made subject to the approval of the Administrator.

[1]In Witness Whereof, the parties hereto have caused this contract to be signed in their respective corporate names by their presidents and their corporate seals to be hereunto affixed and attested by their secretaries, all as of the day and year first above written.

_____ Purchaser
By _____ President
Attest: _____ Secretary
_____ Seller
By _____ President
Attest: _____ Secretary

[2]In Witness Whereof, the Purchaser has caused this contract to be signed in its corporate name by its President and its corporate seal to be hereunto affixed and attested by its Secretary, and the Seller has (have) set his (their) hand(s), all as of the day and year first above written.

_____ Purchaser
By _____ President
Attest: _____ Secretary
_____ Seller
_____ Name
_____ Title

[End of clause]

§§ 1726.316—1726.319 [Reserved]

§ 1726.320 Construction contract, generating, RUS Form 200.

The contract form in this section shall be used when required by this part.

CONSTRUCTION CONTRACT—GENERATING

Notice and Instructions to Bidders

1. Sealed proposals for the furnishing, delivery and installation of equipment and materials for the electric generating plant of _____ (hereinafter called the ''Owner'') which is to be part of the system known as _____ will be received by the Owner on or before ___ o'clock __.M.,____, 19__, at ____, at which time and place the proposals will be publicly opened and read. Any proposal received subsequent to the time specified will be promptly returned to the Bidder unopened.

2. Obtaining Documents. The Plans and Specifications together with all necessary forms and other documents for bidders may be obtained from the Owner or from the Engineer, _____, at the latter's office at _____ upon the payment of $_____, all of which will be refunded to each bona fide bidder within ten days after the bid opening. The Plans and Specifications may be examined at the office of the Owner or at the office of the Engineer. A copy of the Loan Contract (if the Project is to be financed, in whole or in part, pursuant to a loan contract) between the Owner and the United States of America acting through The Administrator of the Rural Utilities Service (hereinafter called the ''Administrator''), and of the Loan Contract between the Owner and any other lender may be examined at the office of the Owner. Each set of documents will have a serial number, given by the Engineer, and the number of each set with the name of the purchaser will be recorded by the Engineers. Bids will be accepted only from the original purchasers.

3. Manner of Submitting Proposals. Proposals and all supporting instruments must be submitted on the forms furnished by the Owner and must be delivered in a sealed envelope addressed to the Owner. The name and address of the Bidder, its license number, if a license is required by the State, and the date and hour of the opening of bids must appear on the envelope in which the Proposal is submitted. Proposals must be filled in in ink or typewritten. No alterations of interlineations will be permitted, unless made before submission and initiated and dated.

4. Familiarity with Conditions. Prior to the submission of the Proposal, the Bidder shall make and shall be deemed to have made a careful examination of the site of the Project and of the Plans and Specifications, Construction Drawings and forms of Contractor's Proposal and Acceptance, and Contractor's Bond on file with the Owner and with the Engineer, and shall become informed as to the location and nature of the proposed construction, the ecological and environmental criteria to be followed, the transportation facilities, the kind and character of soil and terrain to be encountered, the kind of facilities required before and during the construction of the Project, general local conditions and all other matters that may affect the cost and the time of completion of the Project. Bidders will be required to comply with all applicable statutes, regulations, etc., including those pertaining to the licensing of contractors, and the so-called ''Kick-Back'' Statute (48 Stat. 948) and regulations issued pursuant thereto.

5. Proposals will be accepted only from those prequalified bidders invited by the Owner to submit a proposal.

6. The Time for Completion of the Project shall be as specified by the Engineer in the Proposal.

7. Bid Bond. Each Proposal must be accompanied by a Bid Bond in the form attached or a certified check on a bank that is a member

[1]When Seller is a corporation this section of agreement to be used.

[2]When Seller is an individual or partnership this section of agreement to be used. If a partnership—all partners shall sign.

of the Federal Deposit Insurance Corporation, payable to the order of the Owner, in an amount equal to ten percent (10%) of the maximum bid price. Each Bidder agrees, provided its Proposal is one of the three low Proposals, that, by filing its Proposal together with such Bid Bond or check in consideration of the Owner's receiving and considering such Proposal, said Proposal shall be firm and binding upon each such Bidder and such Bid Bond or check shall be held by the Owner until a Proposal is accepted and a satisfactory Contractor's Bond is furnished (where required) by the successful Bidder and such acceptance has been approved by the Administrator, or for a period not to exceed sixty (60) days from the date hereinbefore set for the opening of Proposals, whichever period shall be the shorter. If such Proposal is not one of the three low Proposals, the Bid Bond or check will be returned in each instance within a period of ten (10) days to the Bidder furnishing same.

8. Contractor's Bond. The successful Bidder will be required to execute two additional counterparts of the Proposal and, for a Contract in excess of $100,000, to furnish a Contractor's Bond in triplicate in the form attached hereto with sureties listed by the United States Treasury Department as Acceptable Sureties in a penal sum not less than the Contract price.

9. Failure to Furnish Contractor's Bond. Should the successful Bidder fail or refuse to execute such counterparts of the Proposal or to furnish a Contractor's Bond (where required) within ten (10) days after written notification of the acceptance of the Proposal by the Owner, the Bidder will be considered to have abandoned the Proposal. In such event, the Owner shall be entitled (a) to enforce the Bid Bond in accordance with its terms, or (b) if a certified check has been delivered with the Proposal, to retain from the proceeds of the certified check the difference (not exceeding the amount of the certified check) between the amount of the Proposal and such larger amount for which the Owner may in good faith contract with another party to construct the Project. The term ''successful Bidder'' shall be deemed to include any Bidder whose proposal is accepted after another Bidder has previously refused or has been unable to execute the counterparts of the proposal or to furnish a satisfactory Contractor's Bond (where required.)

10. Factors in Deciding the Award of the Contract. In estimating the lowest cost to the Owner as one of the factors in deciding the award of the Contract, the Owner will consider, in addition to the prices quoted in the Proposals, the following: _____.

11. Contract is Entire Agreement. The Contract to be effected by the acceptance of the Proposal shall be deemed to include the entire agreement between the parties thereto, and the Bidder shall not claim any modification thereof resulting from any representation or promise made at any time by any officer, agent or employee of the Owner or by any other person.

12. Minor Irregularities. The Owner reserves the right to waive minor irregularities or minor errors in any Proposal, if it appears to the Owner that such irregularities or errors were made through inadvertence. Any such irregularities or errors so waived must be corrected on the Proposal prior to the acceptance thereof by the Owner.

13. Bid Rejection. The Owner reserves the right to reject any or all Proposals.

14. Definition of Terms. The terms ''Administrator'', ''Engineer'', ''Supervisor'', ''Project'', ''Completion of Construction'' and ''Completion of the Project,'' as used throughout this Contract, shall be as defined in Article VI, Section 1 of the Contractor's Proposal.

15. The Owner Represents:

(a) If by provisions of the Contractor's Proposal the Owner shall have undertaken to furnish any materials for the construction of the Project, such materials are on hand at locations specified or if such materials are not on hand they will be made available to the successful Bidder at the locations specified before the time such materials are required for construction.

(b) All funds necessary for prompt payment for the construction of the Project will be available. If the Owner shall fail to comply with any of the undertakings contained in the foregoing representations or if any of such representations shall be incorrect, the Bidder will be entitled to an extension of time of completion for a period equal to the delay, if any, caused by the failure of the Owner to comply with such undertakings or by any such incorrect representations, provided the Bidder shall have promptly notified the Owner in writing of its desire to extend the time of completion, and provided, further, that such extension, if any, of the time of the completion shall be the sole remedy of the Bidder for the Owner's failure, because of conditions beyond the control and without the fault of the Owner, to furnish materials in accordance with subparagraph a, hereof.

_____ Owner

By _____

____, 19__

Contractor's Proposal

To Furnish, Deliver and Install Equipment and Materials

To: _____ (hereinafter called the ''Owner'')

Article I—General

Section 1. Offer to Furnish, Deliver and Install. The undersigned (hereinafter called the ''Bidder'') hereby proposes to furnish, deliver

and install the materials, supplies and equipment (hereinafter called the ''Project'') described in the plans, specifications and drawings (hereinafter called the ''Specifications'') attached hereto and made a part hereof, financed in part or whole by a loan to the Owner by the United States of America, acting through the Administrator of the Rural Utilities Service (hereinafter called the ''Administrator'') and designated _____.

Section 2. Familiarity with Conditions. The Bidder has made a careful examination of the site of the Project and of the Plans and Specifications, Construction Drawings, and form of Contractor's Bond attached hereto, and has become informed as to the location and nature of the proposed construction, the transportation facilities and the kind of facilities required before and during the construction of the Project, and has become acquainted with the labor conditions, the ecological and environmental criteria to be followed, state and local laws and regulations which would affect work on the proposed construction.

Section 3. License. The Bidder warrants that a Contractor's License is ___, is not ___, required, and if required, it possesses Contractor's License No. ___ of the State of ___, in which the Project is located and said license expires on ___, 19__.

Section 4. The Bidder warrants that this Proposal is made in good faith and without collusion or connection with any person or persons bidding for the same work.

Section 5. The Bidder warrants that it possesses adequate financial resources and agrees that in the event this Proposal is accepted and a Contractor's Bond is required, it will furnish a Contractor's Bond in the form attached hereto, in a penal sum not less than the maximum Contract Price, with a surety or sureties listed by the United States Treasury Department as Acceptable Sureties.

In the event that the surety or sureties on the performance bond delivered to the Owner contemporaneously with the execution of the Contract or on any bond or bonds delivered in substitution thereof or in addition thereto shall at any time become unsatisfactory to the Owner or the Administrator, the Bidder agrees to deliver to the Owner another or an additional bond.

The Bidder understands, that, if in submitting this Proposal, the Bidder has made any change in the form of Proposal furnished by the Owner, that the Owner and the Administrator may evaluate the effect of such change as they see fit or they may exclude the Proposal from consideration in determining the award of the contract.

Article II—Construction

Section 1. Bid Price. The Bidder will construct the Project for the following sum:

Base Bid _____ Dollars ($_____)
Alternate No. 1 _____ Dollars ($_____)
Alternate No. 2 _____ Dollars ($_____)

Section 2. Taxes. The price quoted herein includes all amounts which the Bidder estimates will be payable by the Bidder or the Owner on account of taxes imposed by any taxing authority upon the sale, purchase or use of materials, supplies or equipment or services or labor of installation to be incorporated in the Project. The Bidder will pay all such taxes and will furnish to appropriate taxing authorities any required information and reports pertaining thereto.

Section 3. Time and Manner of Construction.

(a) The time of Completion of Construction of the Project is of the essence of this Contract. The Bidder will commence the work within ___ calendar days after the Owner shall have given the Bidder written notice to commence construction, will prosecute diligently and complete such construction to the satisfaction of the Owner and the Administrator within ___ calendar days after giving of such notice.

(b) The time of Completion of Construction shall be extended for the period of any reasonable delay due exclusively to causes beyond the control and without fault of the Bidder, including Acts of God, fires, strikes, floods, inability to obtain materials, changes in the Specifications as herein provided and acts or omissions of the Owner with respect to matters for which the Owner is solely responsible: Provided, however, that no such extension of time for completion shall be granted the Bidder unless within ten (10) days after the happening of any event relied upon by the Bidder for such an extension of time the Bidder shall have made a request therefor in writing to the Owner, and provided further that no delay in such time of completion or in the progress of the work which results from any of the above causes except acts or omissions of the Owner, shall result in any liability on the part of the Owner.

(c) In the sequence of construction, the Owner, acting through the Engineer, shall have the right to direct the Bidder to perform any part or parts of the work which is to be performed at the site of the Project before any other part or parts, of such work and the Bidder agrees to comply with all such directions. The Bidder shall comply with all other reasonable directions of the Owner.

(d) The Owner, acting through the Engineer, may from time to time during the progress of the construction of the Project make such changes, additions to or subtractions from the Plans and Specifications and sequence of construction provided for in the previous paragraph which are part of the Contractor's Proposal as conditions may warrant: Provided, however, that if any

change in the construction to be done shall require an extension of time, a reasonable extension will be granted if the Bidder shall make a written request therefor to the Owner within ten (10) days after any such change is made. If the cost of the Project to the Bidder to make the change shall be increased or decreased, the contract price shall be amended by an amount equal to the reasonable cost hereof in accordance with a construction amendment signed by the Owner and the Bidder and approved by the Administrator[1], but no claim for additional compensation for any such change or addition will be considered unless the Bidder shall have made a written request therefor to the Owner prior to the commencement of work in connection with such change or addition. The reasonable cost of any increase or decrease in the contract price covered by contract amendment as outlined above, in the absence of other mutual agreement, shall be computed on the basis of the direct cost of materials, f.o.b. the site of the Project, plus the direct cost of labor necessary to incorporate such materials into the Project (including actual cost of payroll taxes and insurance), plus ____ percent of the direct cost of materials and labor. Labor costs shall be limited to the direct costs for workmen and foremen. Costs for profit and overhead for subcontractors, if any, Bidder's main office overhead, job office overhead and superintendence shall not be included.

Section 4. The Bidder agrees that in the event this Proposal is accepted it will make available for use in connection with the proposed construction all necessary tools and equipment and qualified superintendents and foremen.

Section 5. Supervision and Inspection.

a. The Bidder will give sufficient supervision to the work, using its best skill and attention. The Bidder will carefully study and compare all drawings, specifications and other instructions and will at once report to the Owner any error, inconsistency or omission which it may discover. The Bidder shall cause the construction work on the Project to receive constant supervision by a competent superintendent (hereinafter called the ''Superintendent'') who shall be present at all times during working hours where construction is being carried on. The Bidder shall also employ, in connection with the construction of the Project, capable, experienced and reliable foremen and such skilled workmen as may be required for the various classes of work to be performed. Directions and instructions given to the Superintendent shall be binding upon the Bidder.

b. The Owner reserves the right to require the removal from the Project of any employee of the Bidder if in the judgment of the Owner such removal shall be necessary in order to protect the interest of the Owner. The Owner or the Supervisor, if any, shall have the right to require the Bidder to increase the number of its employees and to increase or change the amount or kinds of tools and equipment if at any time the progress of the work shall be unsatisfactory to the Owner or Supervisor; but the failure of the Owner or Supervisor to give any such directions shall not relieve the Bidder of its obligations to complete the work within the time and in the manner specified in this Proposal.

c. The manner of construction of the Project, and all materials and equipment used therein, shall be subject to the inspection, tests and approval of the Owner and the Administrator, and the Bidder shall furnish all information required by the Owner or by the Administrator concerning the nature or source of any materials incorporated or to be incorporated in the Project. The Owner and the Administrator shall have the right to inspect all payrolls, invoices of materials, and other data and records of the Bidder and of any subcontractor, relevant to the construction of the Project. The Bidder shall provide all reasonable facilities necessary for such inspection and tests and shall maintain an office at the site of the Project, with telephone service where obtainable and at least one office employee to whom directions and instructions of the Owner may be delivered. Delivery of such directions or instructions in writing to the employee of the Bidder at such office shall constitute delivery to the Bidder. The Bidder shall have an authorized agent accompany the Engineer when final inspection is made and, if requested by the Owner, when any other inspection is made.

d. In the event that the Owner through its Engineer, or the Administrator, shall determine that the construction contains or may contain numerous defects, it shall be the duty of the Bidder and the Bidder's Surety or Sureties, if any, to have an inspection made by an engineer approved by the Owner and the Administrator for the purpose of determining the exact nature, extent and location of such defects.

e. The Engineer may recommend to the Owner that the Bidder suspend the work wholly or in part for such period or periods as the Engineer may deem necessary due to unsuitable weather or such other conditions

[1] As long as the total price of this contract including all amendments is less than 120 percent of the original contract price as stated in the acceptance hereto, amendments executed on RUS Form 238 are not subject to the approval of the Administrator. Whenever an amendment to this contract causes the total amended contract to exceed 120 percent of the original contract price, that amendment and all subsequent amendments to this contract shall be made subject to the approval of the Administrator.

as are considered unfavorable for the satisfactory prosecution of the work or because of the failure of the Bidder to comply with any of the provisions of the Contract: Provided, however, that the Bidder shall not suspend work pursuant to this provision without written authority from the Owner to do so. The time of completion hereinabove set forth shall be increased by the number of days of any such suspension, except when such suspension is due to the failure of the Bidder to comply with any of the provisions of this Contract. In the event that work is suspended by the Bidder with the consent of the Owner, the Bidder before resuming work shall give the Owner at least twenty-four (24) hours notice thereof in writing.

Section 6. Defective Materials and Workmanship.

a. The acceptance of any materials, equipment or any workmanship by the Owner or the Engineer shall not preclude the subsequent rejection thereof if such materials, equipment, or workmanship shall be found to be defective after delivery or installation, and any such materials, equipment or workmanship found defective before final acceptance of the construction shall be replaced or remedied, as the case may be, including the installation and removal thereof, by and at the expense of the Bidder. Any such condemned material or equipment shall be immediately removed from the site of the Project by the Bidder at the Bidder's expense. The Bidder shall not be entitled to any payment hereunder so long as any defective materials, equipment, or workmanship in respect to the Project, of which the Bidder shall have had notice, shall not have been replaced or remedied, as the case may be.

b. Notwithstanding the acceptance of workmanship, materials, supplies or equipment, or the giving of any certificate with respect to the completion of the work, if during the construction or within one year after such completion, or within such longer period as the Project or any part thereof may be guaranteed by other provisions of the Contract or the Specifications, the workmanship, materials, supplies or equipment shall be found to be defective or not in conformity with the requirements of the Specifications, the Bidder shall replace such defective materials or equipment or remedy any such defective workmanship within thirty (30) days after notice of the existence thereof shall have been given to the Bidder by the Owner. In event of failure by the Bidder to do so, the Owner may replace such defective materials or equipment or remedy such defective workmanship, as the case may be, and in such event the Bidder shall pay to the Owner the cost and expense thereof.

Article III—Payments and Release of Liens

Section 1. Payments to Bidder.

a. Within the first fifteen (15) days of each calendar month, the Owner shall make partial payment to the Bidder for construction accomplished during the preceding calendar month on the basis of estimates thereof certified to by the Bidder, and approved by the Engineer and by the Owner solely for the purpose of payment: Provided, however, that such approval shall not be deemed approval of the workmanship or materials; and provided further, that in estimating the amount of construction accomplished, consideration shall be given only to equipment and materials incorporated into the Project and equipment and materials delivered to the site in accordance with approved shipping schedule. Only ninety percent (90%) of each such estimate approved during the construction of the Project shall be paid by the Owner to the Bidder prior to Completion of the Project. Upon completion by the Bidder of the construction of the Project, the Engineer shall inspect the work performed hereunder and if he shall find the work acceptable and all provisions hereunder fully performed, he shall so certify to the Owner and shall certify the balance found to be due the Bidder.

The Certificate of Completion, Contract Construction, RUS Form 187, a copy of which is attached hereto, after it has been signed by the Engineer and certified to by the Owner and the Bidder shall thereupon be submitted to the Administrator for his approval and when such approval has been given, the Owner shall make payment to the Bidder of all unpaid amounts to which the Bidder shall be entitled hereunder unless withheld because of the fault of the Bidder.

b. Interest at the rate of _____ percent[2] (___%) per annum shall be paid by the Owner to the Bidder on all unpaid balances due the Bidder commencing fifteen (15) days after the due date: Provided that the delay in payment beyond the due date is not caused by any condition within the control of the Bidder. The due date for purposes of such monthly payment shall be the fifteenth day of each calendar month provided (1) the Bidder on or before the fifth day of such month shall have submitted its certification of construction completed during the preceding month, and (2) the Owner on or before the fifteenth day of such month shall have approved such certification. If, for any reasons not due to the Bidder's fault, such approval shall not have been given on or before the fifteenth day of such month, the due date for purposes of this subsection ''b'' shall be

[2] The Owner shall insert a rate equal to the lowest ''Prime Rate'' listed in the ''Money Rates'' section of the Wall Street Journal on the date such invitation to bid is issued.

the fifteenth day of such month notwithstanding the absence of the approval of the certification.

c. No payments shall be due while the Bidder is in default in respect of any of the provisions of this Proposal and the Owner may withhold from the Bidder the amount of any claim by a third party against either the Bidder or the Owner based upon an alleged failure of the Bidder to perform the work hereunder in accordance with the provisions of this Proposal.

Section 2. Release of Liens and Certificate of Contractor. (See Sample RUS Form 224, Waiver and Release of Lien, and sample RUS Form 231, Certificate of Contractor.) Upon the completion by the Bidder of the construction of the Project but prior to the payment to the Bidder of any amount in excess of ninety percent (90%) of the total cost of construction, the Bidder shall deliver to the Owner, in duplicate, releases of all liens and of rights to claim any lien, in the form attached hereto, from all manufacturers, materialmen, and subcontractors furnishing services or materials for the Project and a certificate in the form attached hereto to the effect that all labor used on or for the project has been paid and that all such releases have been submitted to the Owner for approval.

Section 3. Payments to Materialmen and Subcontractors. The Bidder shall pay each materialman, and each subcontractor, if any, within five (5) days after receipt of any payment from the Owner, the amount thereof allowed the Bidder for and on account of materials furnished or construction performed by each materialman or each subcontractor.

Article IV—Particular Undertakings of the Bidder

Section 1. Protection to Persons and Property. The Bidder shall at all times exercise reasonable precautions for the safety of employees on the work and of the public, and shall comply with all applicable provisions of Federal, State and Municipal safety laws and building and construction codes. All machinery and equipment and other physical hazards shall be guarded in accordance with the ''Manual of Accident Prevention in Construction'' of the Associated General Contractors of America, unless such instructions are incompatible with Federal, State or Municipal laws or regulations.

The following provisions shall not limit the generality of the above requirements:

(a) The Bidder shall at all times keep the premises free from accumulations of waste materials or rubbish caused by his employees or work, and at the completion of the work he shall remove all rubbish from and about the Project and all his tools, scaffolding and surplus materials and shall leave his work ''broom clean''. The Bidder shall dispose of waste material by burying it on the work site or in a manner approved by local authorities, but shall not dispose of any waste materials or rubbish by open burning. The Bidder shall provide chemical sanitary facilities which may be required in compliance with applicable local, State and Federal laws or regulations.

(b) The Bidder will perform the work in such a manner as to maximize preservation of aesthetics and conservation of natural resources, and minimize marring and scarring of the landscape, erosion of soils and oil spillage. There will be no depositing of trash in streams or waterways. Herbicides, other chemicals or their containers will not be deposited in or near streams or waterways.

(c) The Project, from the commencement of work to completion, or to such earlier date or dates when the Owner may take possession and control, in whole or in part as hereinafter provided, shall be under the charge and control of the Bidder and during such period of control by the Bidder all risks in connection therewith and the materials, supplies and equipment to be used therein shall be borne by the Bidder, except risk of loss or of damage to materials or equipment furnished for or used in connection with the Project by the Owner, Bidder or any subcontractor, caused by fire, lightning, wind damage, explosion, riot or civil commotion, aircraft and other vehicles, and smoke damage (against which perils the Owner will maintain insurance, hereinafter called ''Builder's Risk Insurance''). The Bidder will make good and fully repair all injuries and damages to the Project, or any portion thereof under the control of the Bidder by reason of any act of God, or any other casualty or cause whether or not the same shall have occurred by reason of the Bidder's negligence, except damage covered by the Owner's Builder's Risk Insurance.

(i) To the maximum extent permitted by law, Bidder shall defend, indemnify, and hold harmless Owner and Owner's directors, officers, and employees from all claims, causes of action, losses, liabilities, and expenses (including reasonable attorney's fees) for personal loss, injury, or death to persons (including but not limited to Bidder's employees) and loss, damage to or destruction of Owner's property or the property of any other person or entity (including but not limited to Bidder's property) in any manner arising out of or connected with the Contract, or the materials or equipment supplied or services performed by Bidder, its subcontractors and suppliers of any tier. But nothing herein shall be construed as making Bidder liable for any injury, death, loss, damage, or destruction caused by the sole negligence of Owner.

(ii) To the maximum extent permitted by law, Bidder shall defend, indemnify, and hold harmless Owner and Owner's directors, officers, and employees from all liens and claims

filed or asserted against Owner, its directors, officers, and employees, or Owner's property or facilities, for services performed or materials or equipment furnished by Bidder, its subcontractors and suppliers of any tier, and from all losses, demands, and causes of action arising out of any such lien or claim. Bidder shall promptly discharge or remove any such lien or claim by bonding, payment, or otherwise and shall notify Owner promptly when it has done so. If Bidder does not cause such lien or claim to be discharged or released by payment, bonding, or otherwise, Owner shall have the right (but shall not be obligated) to pay all sums necessary to obtain any such discharge or release and to deduct all amounts so paid from the amount due Bidder.

(iii) Bidder shall provide to Owner's satisfaction evidence of Bidder's ability to comply with the indemnification provisions of subparagraphs i and ii above, which evidence may include but may not be limited to a bond or liability insurance policy obtained for this purpose through a licensed surety or insurance company.

(d) The Bidder shall submit to the Owner monthly reports in duplicate of all accidents giving such data as may be prescribed by the Engineer.

(e) Upon violation by the Bidder of any of the provisions of this section, after written notice of such violation given to the Bidder by the Engineer or the Owner, the Bidder shall immediately correct such violation. Upon failure of the Bidder so to do the Owner may correct such violation at the Bidder's expense: Provided, however, that the Owner may, if it deems it necessary or advisable, correct such violation at the Bidder's expense without such prior notice to the Bidder.

Section 2. Insurance. The Bidder shall take out and maintain throughout the contract period insurance of the following types and minimum amounts:

(a) Workers' compensation and employers' liability insurance, as required by law, covering all their employees who perform any of the obligations of the contractor, engineer, and architect under the contract. If any employer or employee is not subject to the workers' compensation laws of the governing state, then insurance shall be obtained voluntarily to extend to the employer and employee coverage to the same extent as though the employer or employee were subject to the workers' compensation laws.

(b) Public liability insurance covering all operations under the contract shall have limits for bodily injury or death of not less than $1 million each occurrence, limits for property damage of not less than $1 million each occurrence, and $1 million aggregate for accidents during the policy period. A single limit of $1 million of bodily injury and property damage is acceptable. This required insurance may be in a policy or policies of insurance, primary and excess including the umbrella or catastrophe form.

(c) Automobile liability insurance on all motor vehicles used in connection with the contract, whether owned, nonowned, or hired, shall have limits for bodily injury or death of not less than $1 million per person and $1 million per occurrence, and property damage limits of $1 million for each occurrence. This required insurance may be in a policy or policies of insurance, primary and excess including the umbrella or catastrophe form.

The Owner shall have the right at any time to require public liability insurance and property damage liability insurance greater than those required in subsections ''b'' and ''c'' of this Section. In any such event, the additional premium or premiums payable solely as the result of such additional insurance shall be added to the Contract price.

The Owner shall be named as Additional Insured on all policies of insurance required in subsections ''b'' and ''c'' of this Section.

The policies of insurance shall be in such form and issued by such insurer as shall be satisfactory to the Owner. The Bidder shall furnish the Owner a certificate evidencing compliance with the foregoing requirements which shall provide not less than (30) days prior written notice to the Owner of any cancellation or material change in the insurance.

Section 3. Assignment of Guarantees. All guarantees of materials and workmanship running in favor of the Bidder shall be transferred and assigned to the Owner prior to the time the Bidder receives final payment.

Section 4. Delivery of Possession and Control to Owner. Upon written request of the Owner, the Bidder shall deliver to the Owner full possession and control of any portion of the Project provided the Bidder shall have been paid at least ninety percent (90%) of the cost of construction of such portion. Upon such delivery of the possession and control of any portion of the Project to the Owner, the risks and obligations of the Bidder as set forth in Article IV, Section 1 c hereof with respect to such portion so delivered to the Owner shall be terminated; Provided, however, that nothing herein contained shall relieve the Bidder of any liability with respect to defective materials and workmanship as contained in Article II, Section 6 hereof.

Article V—Remedies

Section 1. Completion on Bidder's Default. If default shall be made by the Bidder or by any subcontractor in the performance of any of the terms of this Proposal, the Owner, without in any manner limiting its legal and equitable remedies in the circumstances, may serve upon the Bidder and the Surety or Sureties, if any, upon the Contractor's Bond

or Bonds a written notice requiring the Bidder to cause such default to be corrected forthwith. Unless within twenty (20) days after the service of such notice upon the Bidder such default shall be corrected or arrangements for the correction thereof satisfactory to both the Owner and the Administrator shall be made by the Bidder or its Surety or Sureties, if any, the Owner may take over the construction of the Project and prosecute the same to completion by Contract or otherwise for the account and at the expense of the Bidder, and the Bidder and its Surety or Sureties, if any, shall be liable to the Owner for any cost or expense in excess of the Contract price occasioned thereby. In such event the Owner may take possession of and utilize, in completing the construction of the Project, any materials, tools, supplies, equipment, appliances, and plant belonging to the Bidder or any of its subcontractors, which may be situated at the site of the Project. The Owner in such contingency may exercise any rights, claims or demands which the Bidder may have against third parties in connection with this Contract and for such purpose the Bidder does hereby assign, transfer and set over unto the Owner all such rights, claims and demands.

Section 2. Enforcement of Remedies by Administrator. The Administrator may on behalf of the Owner exercise any right or enforce any remedy which the Owner may exercise hereunder.

Section 3. Cumulative Remedies. Every right or remedy herein conferred upon or reserved to the Owner or the Administrator shall be cumulative and shall be in addition to every right and remedy now or hereafter existing at law or in equity or by statute and the pursuit of any right or remedy shall not be construed as an election.

Article VI—Miscellaneous

Section 1. Definitions.

a. The term ''Administrator'' shall mean the Administrator of the Rural Utilities Service of the United States of America and his duly authorized representatives or any other person in whom or authority in which may be vested the duties and functions which the Administrator is now authorized by law to perform.

b. The term ''Engineer'' shall mean the engineer employed by the Owner, with the approval of the Administrator, to provide engineering services for the Project, and said Engineer's duly authorized assistants and representatives.

c. The term ''Supervisor'' shall mean the person, if any, appointed by the Administrator as the representative of the Government under the provisions of the Loan Contract providing for such appointment in special cases. The term is limited to such special representative of the Government, if any, who is responsible exclusively to the Administrator and does not refer to the Manager or any other person employed by the Owner and responsible to it.

d. The term ''Completion of Construction'' shall mean full performance by the Bidder of the Bidder's obligations under the Contract and all amendments and revisions thereof except the Bidder's obligations in respect of Releases of Liens and Certificate of Contractor under Article III, Section 2 hereof. The term ''Completion of the Project'' shall mean full performance by the Bidder of the Bidder's obligations under the Contract and all amendments and revisions thereof. The Certificate of Completion, signed by the Engineer and approved in writing by the Owner and the Administrator, shall be the sole and conclusive evidence as to the date of Completion of Construction and as to the fact of Completion of the Project.

Section 2. Purchase of Materials. The Bidder shall purchase all materials, supplies, and equipment outright and not subject to any conditional sales agreements, bailment lease or other agreement reserving unto the seller any right, title or interest therein. All materials, supplies and equipment shall be new and shall become the property of the Owner when erected in place, or when the Owner shall have made any payment to the Bidder in respect of such materials; whichever shall occur first.

Section 3. Materials and Supplies. In the performance of this contract there shall be furnished only such unmanufactured articles, materials, and supplies as have been mined or produced in the United States, Mexico, or Canada, and only such manufactured articles, materials, and supplies as have been manufactured in the United States substantially all from articles, materials, or supplies mined, produced or manufactured, as the case may be, in the United States, Mexico, or Canada; provided that other articles, materials, or supplies may be used in the event and to the extent that the Administrator shall expressly in writing authorize such use pursuant to the provisions of the Rural Electrification Act of 1938, being Title IV of Public Resolution No. 122, 75th Congress, approved June 21, 1938. The Bidder agrees to submit to the Purchaser such certificates with respect to compliance with the foregoing provision as the Administrator from time to time may require.

Section 4. Patent Infringement. The Bidder shall save harmless and indemnify the Owner from any and all claims, suits and proceedings for the infringement of any patent or patents covering any materials or equipment used in construction of the Project.

Section 5. Compliance with Statutes and Regulations. The Bidder shall comply with all applicable statutes, ordinances, rules, and regulations pertaining to the work. The Bidder acknowledges that it is familiar with the

Rural Electrification Act of 1936, as amended, the so-called ''Kick-Back'' Statute (48 Stat. 948), and regulations issued pursuant thereto, and 18 U.S.C. Section 287 and 1001, as amended. The Bidder understands that the obligations of the parties hereunder are subject to the applicable regulations and orders of Governmental Agencies having jurisdiction in the premises.

Section 6. Equal Opportunity Provisions.

(a) Bidder's Representations.

The Bidder represents that:

It has ____, does not have ____, 100 or more employees, and if it has, that it has ____, has not ____ furnished the Equal Employment Opportunity-Employers Information Report EEO–1, Standard Form 100, required of employers with 100 or more employees pursuant to Executive Order 11246 and Title VII of the Civil Rights Act of 1964.

The Bidder agrees that it will obtain, prior to the award of any subcontract for more than $10,000 hereunder to a subcontractor with 100 or more employees, a statement, signed by the proposed subcontractor, that the proposed subcontractor has filed a current report on Standard Form 100.

The Bidder agrees that if it has 100 or more employees and has not submitted a report on Standard Form 100 for the current reporting year and that if this Contract will amount to more than $10,000, the Bidder will file such report, as required by law, and notify the owner in writing of such filing prior to the Owner's acceptance of this Proposal.

(b) Equal Opportunity Clause. During the performance of this Contract, the Bidder agrees as follows:

(1) The Bidder will not discriminate against any employee or applicant for employment because of race, color, religion, sex or national origin. The Bidder will take affirmative action to ensure that applicants are employed, and that employees are treated during employment without regard to their race, color, religion, sex or national origin. Such action shall include, but not be limited to, the following: Employment, upgrading, demotions or transfer; recruitment or recruitment advertising; layoff or termination; rates of pay or other forms of compensation; and selection of training, including apprenticeship. The Bidder agrees to post in conspicuous places, available to employees and applicants for employment, notices to be provided setting forth the provisions of this Equal Opportunity Clause.

(2) The Bidder will, in all solicitations or advertisements for employees placed by or on behalf of the Bidder, state that all qualified applicants will receive consideration for employment without regard to race, color, religion, sex or national origin.

(3) The Bidder will send to each labor union or representative of workers, with which it has a collective bargaining agreement or other contract or understanding, a notice to be provided advising the said labor union or workers' representative of the Bidder's commitments under this section, and shall post copies of the notice in conspicuous places available to employees and applicants for employment.

(4) The Bidder will comply with all provisions of Executive Order 11246 of September 24, 1965, and the rules, regulations and relevant orders of the Secretary of Labor.

(5) The Bidder will furnish all information and reports required by Executive Order 11246 of September 24, 1965, and by rules, regulations, and orders of the Secretary of Labor, or pursuant thereto, and will permit access to its books, records, and accounts by the administering agency and the Secretary of Labor for purposes of investigation to ascertain compliance with such rules, regulations, and orders.

(6) In the event of the Bidder's noncompliance with the Equal Opportunity Clause of this Contract or with any of the said rules, regulations, or orders, this Contract may be canceled, terminated, or suspended in whole or in part, and the Bidder may be declared ineligible for further Government contracts or federally assisted construction contracts in accordance with procedures authorized in Executive Order 11246 of September 24, 1965, and such other sanctions may be imposed and remedies invoked as provided in Executive Order 11246 of September 24, 1965, or by rule, regulation, or order of the Secretary of Labor, or as provided by law.

(7) The Bidder will include this Equal Opportunity Clause in every subcontract or purchase order unless exempted by the rules, regulations, or order of the Secretary of Labor issued pursuant to Section 204 of Executive Order 11246 of September 24, 1965, so that such provisions will be binding upon each subcontractor or vendor. The Bidder will take such action with respect to any subcontract or purchase order as the administering agency may direct as a means of enforcing such provisions, including sanctions for noncompliance; Provided, however, that in the event Bidder becomes involved in, or is threatened with, litigation with a subcontractor or vendor as a result of such direction by the administering agency, the Bidder may request the United States to enter into such litigation to protect the interests of the United States.

(c) Certificate of Nonsegregated Facilities. The Bidder certifies that it does not maintain or provide for its employees any segregated facilities at any of its establishments, and that it does not permit its employees to perform their services at any location, under its control, where segregated facilities are maintained. The Bidder certifies further that it will not maintain or provide for its employees any segregated facilities at any of its establishments, and that it will not permit its employees to perform

their services at any location, under its control, where segregated facilities are maintained. The Bidder agrees that a breach of this certification is a violation of the Equal Opportunity Clause in this Contract. As used in this certification, the term ''segregated facilities'' means any waiting rooms, work areas, restrooms and washrooms, restaurants and other eating areas, timeclocks, locker rooms and other storage or dressing areas, parking lots, drinking fountains, recreation or entertainment areas, transportation, and housing facilities provided for employees which are segregated by explicit directive or are in fact segregated on the basis of race, color, religion, or national origin, because of habit, local custom, or otherwise. The Bidder agrees that (except where it has obtained identical certifications from proposed subcontractors for specific time periods) it will obtain identical certifications from proposed subcontractors prior to the award of subcontracts exceeding $10,000 which are not exempt from the provisions of the Equal Opportunity Clause, and that it will retain such certifications in its files.

Section 7. Nonassignment of Contract. Except as provided in Section 8 of this Article, the Bidder will not assign this Contract, or any interest in any funds that may become due hereunder, or enter into any contract with any person, firm or corporation, for the performance of the Bidder's obligations hereunder, or any part hereof without the approval in writing of the Owner, the Surety or Sureties, if any, and the Administrator.

Section 8. Subcontracts. The Bidder shall not enter into any subcontract or subcontracts with any person, firm or corporation for the performance of the Bidder's obligation hereunder in any aggregate amount in excess of 40% of The Bidder's obligations (to be calculated on the basis of the total contract price) nor shall the Bidder enter into any subcontract in excess of $20,000, without the approval in writing of the Owner and of the Surety or Sureties, if any, on any bond furnished by the Bidder for the faithful performance of the Bidder's obligations hereunder. If the Bidder shall enter into a subcontract with any subcontractor for the performance of any part of this Contract, the Bidder shall be as fully responsible to the Owner and the Administrator for the acts and omissions of such subcontractor and of persons employed by such subcontractor as the Bidder would be for its own acts and omissions and those of persons directly employed by it.

Section 9. Contractor. Upon acceptance of this Proposal, the successful Bidder shall be the Contractor and all references in the Proposal to the Bidder shall apply to the Contractor.

Section 10. Approval of the Administrator. The acceptance of this Proposal by the Owner shall not create a contract unless such acceptance shall be approved in writing by the Administrator within sixty (60) days after the date set for the opening of proposals.

_____ (Bidder)
By _____ (President)
_____ (Title)
_____ (Address)
Attest:
_____ (Secretary)
Date _____

The Proposal must be signed with the full name of the Bidder. If the Bidder is a partnership, the Proposal must be signed in the partnership name by a partner. If the Bidder is a corporation, the Proposal must be signed in the corporate name by a duly authorized officer and the corporate seal affixed and attested by the Secretary of the Corporation.

Acceptance

Subject to the approval of the Administrator, the Owner, _____, hereby accepts the Proposal of the above-named Bidder for the construction of the Project therein described for the Base Bid of $ _____ and

Alternate No. 1 $_____
Alternate No. 2 $_____
The total contract price is $_____
_____ (Owner)
By _____ President
Attest:
_____ (Secretary)
_____ Date of Contract

[End of clause]

§1726.321 Right-of-way clearing contract, RUS Form 201.

The contract form in this section shall be used when required by this part. This form refers to guide drawings, which do not contain requirements, and, hence, are not included in this part. The guide drawings are included in the printed form available from RUS (see §1726.300.).

RIGHT-OF-WAY CLEARING CONTRACT

Contractor's Proposal

(Proposal shall be submitted in ink or typewritten)

To: _____ (Hereinafter called the ''Owner'')

Article I—General

Section 1. Offer to Clear. The undersigned (hereinafter called the ''Contractor'') hereby proposes to furnish all materials, equipment, machinery, tools, labor, transportation and other means required to clear rights-of-way for the rural electric system bearing the RUS Designation _____ in strict accordance with the Specifications and Drawings

therefor, attached hereto and made a part hereof, for the prices hereinafter stated.

Section 2. Description of Project. The Project will consist of approximately _____ miles of right-of-way clearing. The Project is located in _____ counties in the State of _____.

Section 3. Description of Contract. The Description of Units, Specifications, Drawings and Plans attached hereto and made a part hereof, together with the Proposal and Acceptance constitute the Contract. The Plans consisting of maps and plan and profile sheets if transmission clearing is included, showing the number and types of right-of-way units that are to be cleared, along with other special drawings are identified as follows:

Section 4. Familiarity with Conditions. The Contractor warrants that it has made careful examination of the site of the Project and of the Specifications, Drawings, and form of Contractors' Bond attached hereto, and has become informed as to the location and nature of the proposed work, the transportation facilities, the kind and character of soil and terrain to be encountered, and the kind of facilities required for undertaking and completing the Project, and has become acquainted with the labor conditions, state and local laws and regulations which would affect the proposed work.

Section 5. License. The Contractor warrants that a Contractor's License is ___, is not ___, required, and if required, it possesses Contractor's license number ___ for the State of _____ in which the Project is located and said license expires on _____, 19___.

Section 6. Contractor's Bond. If the estimated cost of the clearing of a Section shall exceed $100,000, the Contractor agrees to furnish, prior to the commencement of work on such Section, a bond in the penal sum of not less than the estimated cost of the Section in the form attached hereto with a Surety or Sureties listed by the United States Treasury Department as acceptable sureties. In the event that the Surety or Sureties on the performance bond delivered to the Owner shall at any time become unsatisfactory to the Owner, the Contractor agrees to deliver to the Owner another or an additional bond.

Section 7. Taxes. The unit prices for Right-of-Way Clearing Units in this Proposal include any sums which are or may be payable by the Contractor on account of taxes imposed by any taxing authority on payments for materials furnished or services performed by the Contractor under the terms of this Contract.

Article II—Construction

Section 1. Time and Manner of Work.

(a) The Contractor agrees to commence work on the Project on a date (hereinafter called the ''Commencement Date'') which shall be determined by the Owner after its acceptance of this Proposal, but in no event will the Commencement Date be later than ___ calendar days after date of acceptance of this Proposal. The Contractor further agrees to prosecute diligently and to complete clearing in strict accordance with the Specifications and Drawings within ___ (___) calendar days (excluding Sundays) after Commencement Date.

(b) The time for Completion of Clearing shall be extended for the period of any reasonable delay which is due exclusively to causes beyond the control and without the fault of the Contractor, including acts of God, fires, floods, inability to obtain materials and acts or omissions of the Owner with respect to matters for which the Owner is solely responsible: Provided, however, that no such extension of time for completion shall be granted the Contractor unless within ten (10) days after the happening of any event relied upon by the Contractor for such an extension of time the Contractor shall have made a request therefor in writing to the Owner, and provided further that no delay in such time of completion or in the progress of the work which results from any of the above causes except acts or omissions of the Owner, shall result in any liability on the part of the Owner.

(c) The sequence of construction shall be as set forth below, the numbers or names being the designations of extensions or areas (hereinafter called the ''Sections'') corresponding to the numbers or names shown on the maps attached hereto, or if no Sections are set forth below, the sequence of construction shall be as determined by the Contractor subject to the approval of the Owner.

(d) The Owner may from time to time during the progress of the work on the Project make such changes in, additions to or subtractions from the Specifications, Drawings and sequence of work provided for in the previous paragraph which are part of the Contractor's Proposal as conditions may warrant: Provided, however, that if any change in the work to be done shall require an extension of time, a reasonable extension will be granted if the Contractor shall make a written request therefor to the Owner within ten (10) days after any such change is made. And provided further, that if the cost to the Contractor of completion of the Project shall be materially increased by any such change or addition, the Owner shall pay the Contractor for the reasonable cost thereof in accordance with a Contract Amendment signed by the Owner and the Contractor, but no claim for additional compensation for any such change or addition will be considered unless the Contractor shall have made a written request therefor to the Owner prior to the commencement of work in connection with such change or addition.

(e) The Contractor will not perform any work hereunder on Sundays unless there is urgent need for such Sunday work and the Owner consents thereto in writing. The time for completion specified in subsection (a) of this Section 1 shall not be affected in any way by inclusion of this subsection by the Owner's consent or lack of consent to Sunday work hereunder.

Section 2. Environmental Protection. The Contractor shall perform work in such a manner as to maximize preservation of beauty, conservation of natural resources, and minimize marring and scarring of the landscape and silting of streams. The Contractor shall not deposit trash in streams or waterways, and shall not deposit herbicides or other chemicals or their containers in or near streams, waterways or pastures. The Contractor shall follow, under the general direction of the Engineer, the criteria relating to environmental protection as specified herein by the Engineer.

Section 3. Supervision and Inspection.

(a) The Contractor shall cause the work on the Project to receive constant supervision by a competent superintendent (hereinafter called the ''Superintendent'') who shall be present at all times during working hours where work is being carried on. The Contractor shall also employ in connection with the Project, capable, experienced and reliable foremen and such skilled workmen as may be required for the various classes of work to be performed. Directions and instructions given to the Superintendent shall be binding upon the Contractor.

(b) The Owner reserves the right to require the removal from the Project of any employee of the Contractor if in the judgment of the Owner such removal shall be necessary in order to protect the interest of the Owner. The Owner shall have the right to require the Contractor to increase the number of its employees and to increase or change the amount or kind of tools and equipment if at any time the progress of the work shall be unsatisfactory to the Owner; but the failure of the Owner to give any such directions shall not relieve the Contractor of its obligations to complete the work within the time and in the manner specified in this Proposal.

(c) The manner of performance of the work, and all equipment used therein, shall be subject to the inspection and approval of the Owner. The Owner shall have the right to inspect all payrolls and other data and records of the Contractor relevant to the work. The Contractor will provide all reasonable facilities necessary for such inspection. The Contractor shall have an authorized agent accompany the inspector when final inspection is made and, if requested by the Owner, when any other inspection is made.

(d) In the event that the Owner shall determine that the work contains or may contain numerous defects, it shall be the duty of the Contractor and the Contractor's Surety or Sureties to have an inspection made by an engineer approved by the Owner for the purpose of determining the exact nature, extent and location of such defects.

(e) The Engineer may recommend to the Owner that the Contractor suspend the work wholly or in part for such period or periods as the Engineer may deem necessary due to unsuitable weather or such other conditions as are considered unfavorable for the satisfactory prosecution of the work or because of the failure of the Contractor to comply with any of the provisions of the Contract: Provided, however, that the Contractor shall not suspend work pursuant to this provision without written authority from the Owner so to do. The time of completion hereinabove set forth shall be increased by the number of days of any such suspension, except when such suspension is due to the failure of the Contractor to comply with any of the provisions of this Contract. In the event that work is suspended by the Contractor with the consent of the Owner, the Contractor before resuming work shall give the Owner at least twenty-four (24) hours' notice thereof in writing.

Section 4. Unsuitable Workmanship. The acceptance of any workmanship by the Owner or the Engineer shall not preclude the subsequent rejection thereof if such workmanship shall be found to be unsuitable. Workmanship found unsuitable before final acceptance of the work shall be remedied, by and at the expense of the Contractor. The Contractor shall not be entitled to any payment hereunder so long as any unsuitable workmanship in respect to the Project, of which the Contractor shall have had notice, shall not have been remedied.

Article III—Payment

Section 1. Payments to Contractor.

(a) Within the first fifteen (15) days of each calendar month, the Owner shall make partial payment to the Contractor for work accomplished during the preceding calendar month on the basis of a statement of completed clearing units furnished and certified to by the Contractor and approved by the Owner solely for the purposes of payment: Provided, however, that such approval by the Owner shall not be deemed approval of the workmanship or materials. Only ninety percent (90%) of each such statement approved during the clearing of a Section shall be paid by the Owner to the Contractor prior to completion of the Section. Upon completion by the Contractor of the clearing of a Section, the Contractor shall prepare a Final Inventory of the Section showing the total number and character of clearing units and shall deliver to the Owner a Certificate of Contractor and Indemnity Agreement in the form attached hereto, showing the total cost of the work performed and stating (1) that

all persons who have furnished labor in connection with the Project and subcontractors who have furnished services for the Project have been paid in full and (2) that the Contractor shall hold the Owner harmless against any liens arising out of the Contractor's performance hereunder which may have been or may be filed against the Owner. Upon the approval of such certificate, the Owner shall make payment to the Contractor of all amounts to which the Contractor shall be entitled thereunder which shall not have been paid.

(b) The Contractor shall be paid on the basis of the number of clearing units actually completed at the direction of the Owner shown by the Final Inventory: Provided, however, that the total cost shall not exceed the total contract price for the Project as set forth in the Acceptance, unless such excess shall have been approved in writing by the Owner.

(c) No payment shall be due while the Contractor is in default in respect of any of the provisions of this Contract and the Owner may withhold from the Contractor the amount of any claim by a third party against either the Contractor or the Owner based upon an alleged failure of the Contractor to perform the work hereunder in accordance with the provisions of the Contract.

(d) If no Sections are designated in Article II, Section 1 (c) the term ''Section'' shall mean for purposes of this subsection (a) and Article IV, Section 3 (b) only, a part of the Project as designated by the Owner which represents at least twenty-five percent (25%) of the total contract price as stated in the Acceptance.

(e) Interest at the rate of ___ percent[1] (___%) per annum shall be paid by the Owner to the Contractor on all unpaid balances due on monthly statements, commencing fifteen (15) days after the due date; provided the delay in payment beyond the due date is not caused by any condition within the control of the Contractor. The due date for purposes of such monthly payment shall be the fifteenth day of each calendar month provided (1) the Contractor on or before the fifth day of such month shall have submitted its certification of right-of-way clearing units completed during the preceding month and (2) the Owner on or before the fifteenth day of such month shall have approved such certification. If for reasons not due to the Contractor's fault, such approval shall not have been given on or before the fifteenth day of such month, the due date for purposes of this subsection (e) shall be the fifteenth day of such month notwithstanding the absence of the approval of the certification.

(f) Interest at the rate of ___ percent[2] (___%) per annum shall be paid by the Owner to the Contractor on the final payment for the Project or any completed Section thereof, commencing fifteen (15) days after the due date. The due date for purposes of such final payment shall be the date of approval by the Owner of the Final Inventory and receipt of the Certificate of Contractor and Indemnity Agreement as conditions precedent to the making of final payment.

Section 2. Payments to Subcontractors. The Contractor shall pay each subcontractor, if any, within five (5) days after receipt of any payment from the Owner, the amount thereof allowed the Contractor for and on account of services performed by each subcontractor.

Article IV—Particular Undertakings of the Contractor

Section 1. Protection to Persons and Property. The Contractor shall at all times take all reasonable precautions for the safety of employees on the work and of the public, and shall comply with all applicable provisions of Federal, state, and municipal safety laws and building and construction codes, as well as the safety rules and regulations of the Owner. All machinery and equipment and other physical hazards shall be guarded in accordance with the ''Manual of Accident Prevention in Construction'' of the Associated General Contractors of America unless such instructions are incompatible with Federal, state, or municipal laws or regulations.

The following provisions shall not limit the generality of the above requirements:

(a) The Contractor shall so conduct work on the Project as to cause the least possible obstruction of public highways.

(b) The Contractor shall provide and maintain all such guard lights and other protection for the public as may be required by applicable statutes, ordinances, and regulations or by local conditions.

(c) The Contractor shall do all things necessary or expedient to properly protect any and all parallel, converging, and intersecting lines, joint line poles, highways, and any and all property of others from damage, and in the event that any such parallel, converging and intersecting lines, joint line poles, highways, or other property are damaged in the course of work on the Project the Contractor shall at its own expense restore any or all of such damaged property immediately to as good a state as before such damage occurred.

(d) Where the right-of-way of the Project traverses cultivated lands, the Contractor shall limit the movement of his crews and equipment so as to cause as little damage as

[1] The Owner shall insert a rate equal to the lowest ''Prime Rate'' listed in the ''Money Rates'' section of the Wall Street Journal on the date such invitation to bid is issued.

[2] See Footnote 1.

possible to crops, orchards, or property and shall endeavor to avoid marring the lands. All fences which are necessarily opened or moved during work on the project shall be replaced in as good condition as they were found and precautions shall be taken to prevent the escape of livestock. The Contractor shall not be responsible for loss of or damage to crops, orchards, or property (other than livestock) on the right-of-way necessarily incident to work on the Project and not caused by negligence or inefficient operation of the Contractor. The Contractor shall be responsible for all other loss of or damage to crops, orchards, or property, whether on or off the right-of-way, and for all loss of or damage to livestock caused by work on the Project. The right-of-way for purposes of this said section shall consist of an area extending ____ feet on both sides of the center line of the poles along the route of the Project lines, plus such area reasonably required by the Contractor for access to the route of the Project lines from public roads to carry on the work.

(e) The Project, from the commencement of work to completion, or to such earlier date or dates when the Owner may take possession and control in whole or in part as hereinafter provided, shall be under the charge and control of the Contractor and during such period of control by the Contractor all risks in connection with the work on the Project and the materials to be used therein shall be borne by the Contractor. The Contractor shall make good and fully repair all injuries and damages to the Project or any portion thereof under the control of the Contractor by reason of an act of God or other casualty or cause whether or not the same shall have occurred by reason of the Contractor's negligence.

(i) To the maximum extent permitted by law, Contractor shall defend, indemnify, and hold harmless Owner and Owner's directors, officers, and employees from all claims, causes of action, losses, liabilities, and expenses (including reasonable attorney's fees) for personal loss, injury, or death to persons (including but not limited to Contractor's employees) and loss, damage to or destruction of Owner's property or the property of any other person or entity (including but not limited to Contractor's property) in any manner arising out of or connected with the Contract, or the materials or equipment supplied or services performed by Contractor, its subcontractors and suppliers of any tier. But nothing herein shall be construed as making Contractor liable for any injury, death, loss, damage, or destruction caused by the sole negligence of Owner.

(ii) To the maximum extent permitted by law, Contractor shall defend, indemnify, and hold harmless Owner and Owner's directors, officers, and employees from all liens and claims filed or asserted against Owner, its directors, officers, and employees, or Owner's property or facilities, for services performed or materials or equipment furnished by Contractor, its subcontractors and suppliers of any tier, and from all losses, demands, and causes of action arising out of any such lien or claim. Contractor shall promptly discharge or remove any such lien or claim by bonding, payment, or otherwise and shall notify Owner promptly when it has done so. If Contractor does not cause such lien or claim to be discharged or released by payment, bonding, or otherwise, Owner shall have the right (but shall not be obligated) to pay all sums necessary to obtain any such discharge or release and to deduct all amounts so paid from the amount due Contractor.

(iii) Contractor shall provide to Owner's satisfaction evidence of Contractor's ability to comply with the indemnification provisions of subparagraphs i and ii above, which evidence may include but may not be limited to a bond or liability insurance policy obtained for this purpose through a licensed surety or insurance company.

(f) Any and all excess earth, rock, debris, underbrush, and other useless material shall be removed by the Contractor from the site of the Project as rapidly as practicable as the work progresses. The Contractor shall not deposit trash in streams or waterways, and shall not deposit herbicides or other chemicals or their containers in or near streams, waterways or pastures.

(g) Upon violation by the Contractor of any provisions of this section, after written notice of such violation given to the Contractor by the Owner, the Contractor shall immediately correct such violation. Upon failure of the Contractor so to do the Owner may correct such violation at the Contractor's expense.

(h) The Contractor shall submit to the Owner monthly reports in duplicate of all accidents, giving such data as may be prescribed by the Owner.

(i) The Contractor shall not proceed with the cutting of trees or clearing of right-of-way without written notification from the Owner that proper authorization has been received from the owner of the property and the Contractor shall promptly notify the Owner whenever any landowner objects to the trimming or felling of any trees or the performance of any other work on his land in connection with the Project and shall obtain the consent in writing of the Owner before proceeding in any such case.

Section 2. Insurance. The Contractor shall take out and maintain throughout the period of this Agreement the following minimum amounts of insurance:

(a) Worker's compensation and employer's liability insurance, as required by law, covering all their employees who perform any of the obligations of the contractor, engineer, and architect under the contract. If any employer or employee is not subject to workers'

compensation laws of the governing state, then insurance shall be obtained voluntarily to extend to the employer and employee coverage to the same extent as though the employer or employee were subject to the workers' compensation laws.

(b) Public liability insurance covering all operations under the contract shall have limits for bodily injury or death of not less than $1 million each occurrence, limits for property damage of not less than $1 million each occurrence, and $1 million aggregate for accidents during the policy period. A single limit of $1 million of bodily injury and property damage is acceptable. This required insurance may be in a policy or policies of insurance, primary and excess including the umbrella or catastrophe form.

(c) Automobile liability insurance on all motor vehicles used in connection with the contract, whether owned, nonowned, or hired, shall have limits for bodily injury or death of not less than $1 million per person and $1 million each occurrence, and property damage limits of $1 million for each occurrence. This required insurance may be in a policy or policies of insurance, primary and excess including the umbrella or catastrophe form.

The Owner shall have the right at any time to require public liability insurance and property damage liability insurance greater than those required in subsection ''b'' and ''c'' of this Section. In any such event, the additional premium or premiums payable solely as the result of such additional insurance shall be added to the Contract price.

The Owner shall be named as Additional Insured on all policies of insurance required in subsections ''b'' and ''c'' of this Section.

The policies of insurance shall be in such form and issued by such insurer as shall be satisfactory to the Owner. The Bidder shall furnish the Owner a certificate evidencing compliance with the foregoing requirements which shall provide not less than (30) days prior written notice to the Owner of any cancellation or material change in the insurance.

Section 3. Delivery of Possession and Control to the Owner.

(a) Upon written request of the Owner, the Contractor shall deliver to the Owner full possession and control of any portion of the Project provided the Contractor shall have been paid at least ninety percent (90%) of the cost of the work of such portion. Upon such delivery of possession and control to the Owner, the risks and obligations of the Contractor as set forth in Section 1(e) of this Article IV with respect to such portion so delivered to the Owner, shall be terminated: Provided, however, that nothing herein contained shall relieve the Contractor of any liability with respect to unsuitable workmanship as specified in Article II, Section 4.

(b) Where the construction of a Section as hereinbefore defined in Article II, Section 1 (c) and Article III, Section 1 (d) shall have been completed by the Contractor, the Owner agrees, after receipt of a written request from the Contractor, to accept delivery of possession and control of such Section upon having inspected the Section and having found the work acceptable. Upon such delivery of the possession and control of any such Section to the Owner, the risk and obligations of the Contractor as set forth in Article IV, Section 1 (e) hereof with respect to such Section so delivered to the Owner shall be terminated: Provided, however, that nothing herein contained shall relieve the Contractor of any liability with respect to unsuitable workmanship as specified in Article II, Section 4 hereof.

Section 4. Assignment of Guarantees. All guarantees of materials and workmanship running in favor of the Contractor shall be transferred and assigned to the Owner prior to the time the Contractor receives final payment for any Section.

Article V—Remedies

Section 1. Completion on Contractor's Default. If default shall be made by the Contractor or by any subcontractor in the performance of any of the terms of this Proposal, the Owner, without in any manner limiting its legal and equitable remedies in the circumstances, may serve upon the Contractor and the Surety, if any, a written notice requiring the Contractor to cause such default to be corrected forthwith.

Unless within twenty (20) days after the service of such notice upon the Contractor and the Surety, if any, such default shall be corrected or arrangements for the correction thereof satisfactory to the Owner shall be made, the Owner may take over the work on the Project and prosecute the same to completion by contract or otherwise for the account and at the expense of the Contractor, and the Contractor shall be liable to the Owner for any cost or expense in excess of the contract price occasioned thereby. In such event the Owner may take possession of and utilize, in completing the Project, any materials, tools, supplies, equipment, appliance, and plant belonging to the Contractor or any of its subcontractors, which may be situated at the site of the Project. The Owner in such contingency may exercise any rights, claims, or demands which the Contractor may have against third persons in connection with this Proposal and for such purpose the Contractor does hereby assign, transfer, and set over unto the Owner all such rights, claims, and demands.

Section 2. Liquidated Damages. The time of the Completion of Clearing is of the essence of the Contract. Should the Contractor neglect, refuse or fail to complete the clearing within the time herein agreed upon, after

giving effect to extensions of time, if any, herein provided, then, in that event and in view of the difficulty of estimating with exactness damages caused by such delay, the Owner shall have the right to deduct from and retain out of such monies which may be then due, or which may become due and payable to the Contractor the sum of ____ dollars (____) per day for each and every day that such work is delayed in its completion beyond the specified time, as liquidated damages and not as a penalty; if the amount due and to become due from the Owner to the Contractor is insufficient to pay in full any such liquidated damages, the Contractor shall pay to the Owner the amount necessary to effect such payment in full: Provided, however, that the Owner shall promptly notify the Contractor in writing of the manner in which the amount retained, deducted or claimed as liquidated damages was computed.

Section 3. Cumulative Remedies. Every right or remedy herein conferred upon or reserved to the Owner shall be cumulative, shall be in addition to every right and remedy now or hereafter existing at law or in equity or by statute and the pursuit of any right or remedy shall not be construed as an election: Provided, however, that the provision of Section 2 of this Article shall be the exclusive measure of damages for failure by the Contractor to complete the clearing within the time herein agreed upon.

Article VI—Miscellaneous

Section 1. Definitions.

(a) The term ''Engineer'' shall mean the engineer employed by the Owner to provide engineering services for the Project and said Engineer's duly authorized assistants and representatives. The term ''Engineer'' will mean ''Owner'' if no engineer is employed by the Owner to provide engineering services.

(b) The term ''Completion of Clearing'' shall mean full performance by the Contractor of the Contractor's obligations under the Contract and all amendments and revisions thereof except the Contractor's obligations in respect of furnishing (1) the ''Certificate of Contractor and Indemnity Agreement'' and (2) the Final Inventory both referred to in Article III, Section 1 hereof.

(c) The term ''Completion'' shall mean full performance by the Contractor of the Contractor's obligations under the Contract and all amendments and revisions thereof relating to any Section of the Project or to the Project.

Section 2. Patent Infringement. The Contractor shall save harmless and indemnify the owner from any and all claims, suits and proceedings for the infringement of any patent or patents covering any materials or equipment used in construction of the Project.

Section 3. Permits for Explosives. All permits necessary for the handling or use of dynamite or other explosives in connection with the construction of the Project shall be obtained by and at the expense of the Contractor.

Section 4. Compliance with Statutes and Regulations. The Contractor will comply with all applicable statutes, ordinances, rules, and regulations pertaining to the work. The Contractor acknowledges that it is familiar with the Rural Electrification Act of 1936, as amended, the so-called ''Kick-Back'' Statute (48 Stat. 948), and regulations issued pursuant thereto, and 18 U.S.C. §§286, 287, 1001, as amended. The Contractor understands that the obligations of the parties hereunder are subject to the applicable regulations and orders of governmental agencies having jurisdiction in the premises.

Section 5. Equal Opportunity Provisions.

(a) Contractor's Representations.

The Contractor represents that:

It has __, does not have __, 100 or more employees, and if it has, that it has __, has not __, furnished the Equal Employment Opportunity—-Employers Information Report EEO–1, Standard Form 100, required of employers with 100 or more employees pursuant to Executive Order 11246 and Title VII of the Civil Rights Act of 1964.

The Contractor agrees that it will obtain, prior to the award of any subcontractor for more than $10,000 hereunder to a subcontractor with 100 or more employees, a statement, signed by the proposed subcontractor, that the proposed subcontractor has filed a current report on Standard Form 100. The Contractor agrees that if it has 100 or more employees and has not submitted a report on Standard Form 100 for the current reporting year and that if this Contract will amount to more than $10,000, the Contractor will file such report, as required by law, and notify, the Owner in writing of such filing prior to the Owner's acceptance of this Proposal.

(b) Equal Opportunity Clause. During the performance of this Contract, the Contractor agrees as follows:

(1) The Contractor will not discriminate against any employee or applicant for employment because of race, color, religion, sex, or national origin. The Contractor will take affirmative action to ensure that applicants are employed, and that employees are treated during employment without regard to their race, color, religion, sex, or national origin. Such action shall include, but not be limited to the following: Employment, upgrading, demotion or transfer; recruitment or recruitment advertising; layoff or termination; rates of pay or other forms of compensation; and selection for training, including apprenticeship. The Contractor agrees to

post in conspicuous places, available to employees and applicants for employment, notices to be provided setting forth the provisions of this Equal Opportunity Clause.

(2) The Contractor will, in all solicitations or advertisements for employees placed by or on behalf of the Contractor, state that all qualified applicants will receive consideration for employment without regard to race, color, religion, sex, or national origin.

(3) The Contractor will send to each labor union or representative of workers with which it has a collective bargaining agreement or other contract or understanding, a notice to be provided advising the said labor union or worker's representatives of the Contractor's commitments under this section, and shall post copies of the notice in conspicuous places available to employees and applicants for employment.

(4) The Contractor will comply with all provisions of Executive Order 11246 of September 24, 1965, and of the rules, regulations and relevant orders of the Secretary of Labor.

(5) The Contractor will furnish all information and reports required by Executive Order 11246 of September 24, 1965, and by rules, regulations and orders of the Secretary of Labor, or pursuant thereto, and will permit access to its books, records and accounts by the administering agency and the Secretary of Labor for purposes of investigation to ascertain compliance with such rules, regulations and orders.

(6) In the event of the Contractor's noncompliance with the Equal Opportunity Clause of this Contract or with any of the said rules, regulations or orders, this Contract may be cancelled, terminated or suspended in whole or in part and the Contractor may be declared ineligible for further Government contracts or federally-assisted construction contracts in accordance with procedures authorized in Executive Order 11246 of September 24, 1965, and such other sanctions may be imposed and remedies invoked as provided in the said Executive Order or by rule, regulation or order of the Secretary of Labor, or as otherwise provided by law.

(7) The Contractor will include this Equal Opportunity Clause in every subcontract or purchase order unless exempted by rules, regulations or orders of the Secretary of Labor issued pursuant to Section 204 of Executive Order 11246 of September 24, 1965, so that such provisions will be binding upon each subcontractor or vendor. The Contractor will take such action with respect to any subcontract or purchase order as the administering agency may direct as a means of enforcing such provisions, including sanctions for noncompliance: Provided, however, that in the event a Contractor becomes involved in, or is threatened with, litigation with a subcontractor or vendor as a result of such direction by the administering agency, the Contractor may request the United States to enter into such litigation to protect the interests of the United States.

(c) Certificate of Nonsegregated Facilities. The Contractor certifies that it does not maintain or provide for its employees any segregated facilities at any of its establishments, and that it does not permit its employees to perform their services at any location, under its control, where segregated facilities are maintained. The Contractor certifies further that it will not maintain or provide for its employees any segregated facilities at any of its establishments, and that it will not permit its employees to perform their services at any location, under its control, where segregated facilities are maintained. The Contractor agrees that a breach of this certification is a violation of the Equal Opportunity Clause in this Contract. As used in this certification, the term ''segregated facilities'' means any waiting rooms, work areas, restrooms and washrooms, restaurants and other eating areas, timeclocks, locker rooms and other storage or dressing areas, parking lots, drinking fountains, recreation or entertainment areas, transportation, and housing facilities provided for employees which are segregated by explicit directive or are in fact segregated on the basis of race, color, religion, or national origin, because of habit, local custom, or otherwise. The Contractor agrees that (except where it has obtained identical certifications from proposed subcontractors for specific time periods) it will obtain identical certifications from proposed subcontractors prior to the award of subcontracts exceeding $10,000 which are not exempt from the provisions of the Equal Opportunity Clause, and that it will retain such certifications in its files.

Section 6. Franchises and Rights-of-way. The Contractor will be under no obligation to obtain or assist in obtaining any franchises, authorizations, permits, or approvals required to be obtained by the Owner from Federal, state, county, municipal or other authority; any rights-of-way over private lands; or any agreements between the Owner and third parties with respect to the construction and operation of the Project.

Section 7. Nonassignment of Contract. The Contractor shall not assign the Contract effected by an acceptance of this Proposal or any part thereof or enter into any contract with any person, firm or corporation for the performance of the Contractor's obligations thereunder, or any part thereof, without the approval in writing of the Owner.

Section 8. Extension to Successors and Assigns. Each and all of the covenants and agreements contained in the Contract effected by the acceptance of the Proposal shall extend to and be binding upon the successors and assigns of the parties thereto.

_____ (Contractor)
By _____ (President)
_____ (Address)
Attest: _____ (Secretary)
Date of Proposal _____

This Proposal must be signed with the full name of the Contractor. If the Contractor is a partnership, the Proposal must be signed in the partnership name by a partner. If the Contractor is a corporation, the Proposal must be signed in the corporate name by a duly authorized officer and the corporate seal affixed and attested by the Secretary of the Corporation.

Description of Units

Right-of-Way Clearing Units:

R1–10. The unit is 1,000 feet in length and 10 feet in width (to be measured on one side of the pole line) of actual clearing of right-of-way. This includes clearing of underbrush, tree removal, and such tree trimming as is required so that the right-of-way, except for tree stumps which shall not exceed _____ in height, shall be clear from the ground up of the width specified on one side of the line of poles carrying primary conductors. This unit does not include clearing or trimming associated with secondaries or services which is included with conductor units. The length of actual clearing shall be measured in a straight line parallel to the horizontal line between stakes and across the maximum dimension of foliage cleared projected to the ground line. All trees and underbrush across the width of the right-of-way, as designated by the Engineer shall be considered to be grouped together as a single length in measuring the total length of clearing. Spaces along the right-of-way in which no trees are to be removed or trimmed or underbrush cleared shall be omitted from the total measurement. All length thus arrived at, added together and divided by 1,000, shall give the number of 1,000-foot R1–10 units of clearing. This unit includes the removal or topping, at the option of the Contractor; of danger trees outside of the right-of-way when so designated by the Engineer. (Danger trees are defined as dead or leaning trees which, in falling, will affect the operation of the line.) The Contractor shall not remove or trim shade, fruit or ornamental trees unless so directed by the Engineer.

R1–20. This unit is identical with R1–10 except that width is 20 feet (to be measured 10 feet on each side of the pole line).

R1–30. This unit is identical with R1–10 except that width is 30 feet (to be measured 15 feet on each side of the pole line).

R1–40. This unit is identical with R1–10 except that width is 40 feet (to be measured 20 feet on each side of the pole line).

RC1–10, RC1–20, RC1–30, RC1–40. These units are identical to the respective R1 units except that chemical treatment of stumps is required in addition to the clearing of underbrush, tree removal and tree trimming.

TM–12. The unit is 1,000 feet in length and ___ (___) feet in width (to be measured ___ (___) feet on one side of pole line or centerline of structures) of actual clearing of right-of-way. This includes clearing of underbrush, tree removal, and such tree trimming as is required so that the right-of-way, except for tree stumps which shall not exceed ___ in height, shall be clear from the ground up on one side of the line poles carrying conductors. (See Detail A, Drawing TM–12–2A). The length of actual clearing shall be measured in a straight line parallel to the horizontal line between poles or centerline of structures and across the maximum dimension of foliage cleared projected to the ground line (See Detail B, Drawing TM–12–2A). All trees and underbrush across the width of the right-of-way shall be considered to be grouped together as a single length in measuring the total length of clearing (See Detail C, Drawing TM–12–2A). Spaces along the right-of-way in which no trees are to be removed or trimmed or underbrush cleared shall be omitted from the total measurement. All length thus arrived at, added together and divided by 1,000 shall give the number of TM–12 units of clearing. The Contractor shall not remove or trim shade, fruit or ornamental trees unless so directed by the Engineer in writing.

TM–12 (1). This unit is identical with TM–12, except the full width of the right-of-way to be cleared shall be ___ (___) feet wide (to be measured ___ (___) feet on each side of the pole line or centerline of structures) (See Detail D, Drawing TM–12–2A.)

TMC–12, TMC–12(1). These units are identical to the respective TM units except that chemical treatment of stumps is required in addition to the clearing of underbrush, tree removal and tree trimming.

TM–13. The unit, for purpose of quoting, is 1,000 feet in length of clearing off the right-of-way. The Engineer will select those trees of the right-of-way that he deems to be a hazard to the line and will designate them to the Contractor in writing as danger trees. When so designated, the Contractor shall remove or top such trees at his option except that the Contractor shall trim and not remove shade, fruit or ornamental trees unless otherwise directed by the Engineer in writing (See Drawings TM–12–2A and TM–13 for examples of danger trees).

The measurement of length of right-of-way to be cleared shall be considered as a straight line parallel to the horizontal line between poles or centerline of structures, such measurement of length to be based on maximum dimension of foliage (not trunk) projected to the ground line (See Details E, F, G, and H, Drawing TM–12–2A). Dead trees having no foliage shall be measured across the maximum dimension and multiplied by

two. (See Detail F, Drawing TM–12–2A). Each tree so removed shall be added together to determine the total length of clearing. All length thus arrived at, added together and divided by 1,000 shall give the number of TM–13 units (Example: Details E, F, G, and H, Drawing TM–12–2A, total .1 of a TM–13 unit).

TM–14. The unit is 1,000 feet in length and ___ (___) feet in width (to be measured ___ (___) feet on one side of right-of-way center line) of actual clearing of right-of-way. Trees and underbrush should be cleared from the ground up within 10 feet of any structure location. The Engineer will mark the trees and brush to be cleared to provide ''undulating'' boundaries. Low growing trees and brush are to be left in the right-of-way to the extent it will not be hazardous to the line or will not interfere with the access road. The length of actual clearing shall be measured in a straight line parallel to the horizontal line between poles or center line of structures and across the maximum dimension of foliage cleared projected to the ground line (See Detail B, Drawing TM–12–2A). All trees and underbrush cleared across the right-of-way shall be considered to be grouped together as a single length in measuring the total length of clearing (See Detail C, Drawing TM–12–2A). Spaces along the right-of-way in which no trees are to be removed or trimmed or underbrush cleared shall be omitted from the total measurement.

TM–14 (1). This unit is identical with TM–14 except the full width of the right-of-way to be cleared shall be ___ (___) feet wide (See Detail D, Drawing TM–12–2A).

TM–15. The unit is 1,000 feet in length and ___ (___) feet in width (to be measured ___ (___) feet on one side of the right-of-way center line) of actual clearing of the right-of-way. Trees and underbrush should be cleared from ground up within 10 feet of any structure location. The Engineer will mark the trees and brush to be cleared to provide a ''feathered'' appearance in the right-of-way. Low growing trees and brush are to be left in the right-of-way to the extent it will not be hazardous to the line or will not interfere with the access road.

The length of actual clearing shall be measured in a straight line parallel to the horizontal line between poles or center line of structures and across the maximum dimension of foliage cleared projected to ground line. (See Detail B, Drawing TM–12–2A). All trees and underbrush cleared across the right-of-way shall be considered to be grouped together as a single length in measuring the total length of clearing (See Detail C, Drawing TM–12–2A). Spaces along the right-of-way, in which no trees are to be removed or trimmed or underbrush cleared shall be omitted from the total measurement.

TM–15 (1). This unit is identical to TM–15 except the full width of the right-of-way to be cleared shall be ___ (___) feet wide (See Detail D, Drawing TM–12–2A).

Additional Requirements. (When specifying units denote type of disposal A or B).

A. Trees, brush, branches and refuse shall, without delay be disposed of by such of the following methods as the Engineer will direct (Engineer to strike out methods not to be used).

1. Burned
2. Piled on one side of right-of-way
3. Roller chopped and left on right-of-way in such a manner as not to obstruct roads, ditches, drains, etc.
4. Other (Describe)

B. Trees that are felled shall be cut to commercial wood lengths, stacked neatly, and left on the right-of-way for the landowner. Commercial wood length means the length designated by the Engineer but in no case shall it be required to be less than ___ (___) feet. Brush, branches and refuse shall, without delay, be disposed of by such of the following methods as the Engineer will direct (Engineer to strike out methods not to be used).

1. Burned
2. Piled on one side of right-of-way
3. Roller chopped and left on right-of-way in such a manner as not to obstruct roads, ditches, drains, etc.
4. Other (Describe)

Specifications

In preparing the right-of-way, trees shall be removed, underbrush cleared, and trees trimmed so that the right-of-way shall be clear from the ground up or as specified. Trees fronting each side of the right-of-way shall be trimmed symmetrically unless otherwise directed by the Engineer. Dead trees beyond the right-of-way which would strike the line in falling shall be removed. Leaning trees beyond the right-of-way which would strike the line in falling and which would require topping if not removed may be removed or topped at the direction of the Engineer.

Where RC or TMC units are specified, the right-of-way shall be cleared in accordance with the instructions in the preceding paragraph and in addition, all stumps one-half inch in diameter and larger shall be sprayed as specified by the Engineer.

Right-of-Way Units

DISTRIBUTION CLEARING UNITS

Unit No.	No. of units	Unit price	Extended price
.....			

Total _____

TRANSMISSION CLEARING UNITS

Unit No.	No. of units	Unit price	Extended price

Total _____
Total Distribution and Transmission _____

Acceptance

The Owner hereby accepts the foregoing Proposal of the Contractor, _____ for the following:

Total Distribution Clearing: $_____
Total Transmission Clearing: $_____
The total contract price is $_____
_____ Owner

By _____ President
_____ Secretary
_____ Date of Contract

[End of clause]

§1726.322 Transmission system right-of-way clearing contract, RUS Form 203.

The contract form in this section shall be used when required by this part. This form refers to guide drawings, which do not contain requirements, and, hence, are not included in this part. The guide drawings are included in the printed form available from RUS (See §1726.300.).

TRANSMISSION SYSTEM RIGHT-OF-WAY CLEARING CONTRACT

Notice and Instructions to Bidders

1. Sealed proposals for the clearing of underbrush and trees from right-of-way, including the supply of necessary labor and equipment, of a rural electric system of ___ (hereinafter called the ''Owner'') bearing the RUS Designation ___ will be received by the Owner on or before ___ o'clock __ M., ___ 19___, at its office at ___ at which time and place the proposals will be publicly opened and read. Any proposal received subsequent to the time specified will be promptly returned to the Bidder unopened.

2. Description of Project. The Project will consist of approximately: ___ miles of right-of-way clearing. The Project is located in ___ Counties in the State of ___.

3. Obtaining Documents. All necessary forms and other documents for bidders may be obtained from the Owner, or from the Engineer ___ at the latter's office at ___. A copy of the Loan Contract (if the Project is to be financed in whole or in part, pursuant to a Loan Contract) between the Owner and the United States of America acting through the Administrator of the Rural Utilities Service (hereinafter called the Administrator), and any other lender's contract may be examined at the office of the Owner. Each set of documents will have a serial number, given by the Engineer, and the number of each set with the name of the recipient will be recorded by the Engineer. Bids will be accepted only from the original recipient.

4. Manner of Submitting Proposals. Proposals and all supporting instruments must be submitted on the forms furnished by the Owner and must be delivered in a sealed envelope addressed to the Owner. The name and address of the Bidder, its license number if a license is required by the State, and the date and hour of the opening of bids must appear on the envelope in which the Proposal is submitted. Proposals must be filled in in ink or typewritten. No alterations or interlineations will be permitted, unless made before submission, and initialed and dated.

5. Familiarity with Conditions. Prior to the submission of the Proposal the Bidder shall make and shall be deemed to have made a careful examination of the site of the Project and of the Specifications, Drawings, and forms of Contractor's Proposal and Contractor's Bond on file with the Secretary of the Owner and with the Engineer, and shall become informed as to the location and nature of the proposed work, the transportation facilities, the kind and character of soil and terrain to be encountered, the kind of facilities required before and during the construction of the Project. Bidders will be required to comply with all applicable statutes, regulations, etc., including those pertaining to the licensing of contractors, and the so-called ''Kick-back Statute'' (48 Stat. 948) and regulations issued pursuant thereto.

6. Proposals will be accepted only from those prequalified bidders invited by the Owner to submit a proposal.

7. The time for Completion of the Project shall be as specified by the Engineer in the Proposal.

8. Bid Bond. Each Proposal must be accompanied by a bid bond in the form attached or a certified check on a bank that is a member of the Federal Deposit Insurance Corporation, payable to the order of the Owner, in an amount equal to ten percent (10%) of the maximum bid price. Each Bidder agrees, provided its Proposal is one of the three low Proposals, that, by filing its Proposal together with such bid bond or check in consideration of the Owner's receiving and considering such Proposals, said Proposal shall be firm and binding upon each such Bidder and such bid bond or check shall be held by the Owner until a Proposal is accepted and a satisfactory Contractor's Bond is furnished (where required) by the successful Bidder and such acceptance has been approved by the Administrator, or for a period not to exceed sixty (60) days from the date hereinbefore set

for the opening of Proposals, whichever period shall be the shorter. If such Proposals is not one of the three low Proposals, the bid bond or check will be returned in each instance within a period of ten (10) days to the Bidder furnishing same.

9. Contractor's Bond. The successful Bidder will be required to execute two additional counterparts of the Proposal and, for a Contract in excess of $100,000, to furnish a Contractor's Bond in triplicate in the form attached hereto with sureties listed by the United States Treasury Department as Acceptable Sureties, in a penal sum not less than the contract price.

10. Failure to Furnish Contractor's Bond. Should the successful Bidder fail or refuse to execute such counterparts or to furnish a Contractor's Bond (where required) within ten (10) days after written notification of the acceptance of the Proposal by the Owner, the Bidder will be considered to have abandoned the Proposal. In such event, the Owner shall be entitled (a) to enforce the bid bond in accordance with its terms, or (b) if a certified check has been delivered with the Proposal, to retain from the proceeds of the certified check, the difference (not exceeding the amount of the certified check) between the amount of the Proposal and such larger amount for which the Owner may in good faith contract with another party to construct the Project. The term ''successful Bidder'' shall be deemed to include any Bidder whose Proposal is accepted after another Bidder has previously refused or has been unable to execute the counterparts or to furnish a satisfactory Contractor's Bond (where required.)

11. Contract is Entire Agreement. The Contract to be effected by the acceptance of the Proposal shall be deemed to include the entire agreement between the parties thereto, and the Bidder shall not claim any modification thereof resulting from any representation or promise made at any time by any officer, agent or employee of the Owner or by any other person.

12. Minor Irregularities. The Owner reserves the right to waive minor irregularities or minor errors in any Proposal, if it appears to the Owner that such irregularities or errors were made through inadvertence. Any such irregularities or errors so waived must be corrected on the Proposal in which they occur prior to the acceptance thereof by the Owner.

13. Bid Rejection. The Owner reserves the right to reject any or all Proposals.

14. Definition of Terms. The terms ''Administrator,'' ''Engineer,'' ''Supervisor,'' ''Project,'' ''Completion of Construction'' and ''Completion of the Project'' as used throughout this Contract shall be as defined in Article VI, Section 1, of the Contractor's Proposal.

15. The Owner represents:

a. All easements and rights-of-way, except as shown on maps included in the Specifications, have been obtained from the Owners of the properties across which the project is to be carried out (including tenants who may reasonably be expected to object to such clearing). The remaining easements and rights-of-way, if any, will be obtained as required to avoid delay in construction.

b. Prompt payment for the work to be done will be made with funds pursuant to the Loan Contract, or with funds otherwise available to the Owner.

If the Owner shall fail to comply with any of the undertakings contained in the foregoing representations or if any such representations shall be incorrect, the Bidder will be entitled to extension of time of completion for a period equal to the delay, if any, caused by the failure of the Owner to comply with such undertakings or by any such incorrect representation; provided the Bidder shall have promptly notified the Owner in writing of its desire to extend the time of completion in accordance with the foregoing.

_____ Owner

By _____

_____, 19___

Contractor's Proposal

(Proposal shall be submitted in ink or typewritten)

To: _____ (Hereinafter called the ''Owner'')

Article I—General

Section 1. Offer to Clear. The undersigned (hereinafter called the ''Bidder'') hereby proposes to furnish all materials, equipment, machinery, tools, labor, transportation and other means required to clear rights-of-way for rural electric system bearing the RUS Designation ___ in strict accordance with the Specifications and Drawings therefore, attached hereto and made a part hereof, for the prices hereinafter stated.

Section 2. Description of Contract. The Notice and Instructions to Bidders and Specifications attached hereto and made a part hereof, together with the Proposal and Acceptance constitute the contract. The Specifications consisting of maps, plan and profile sheets showing the number and types of right-of-way units that are to be cleared for each parcel, along with other special drawings are identified as follows: ___.

Section 3. Familiarity with Conditions. The Bidder has made a careful examination of the site of the Project and of the Specifications, Drawings, and form of Contractor's Bond attached hereto, and has become informed as to the location and nature of the proposed work, the transportation facilities, the kind and character of soil and terrain to be encountered, and the kind of facilities required for undertaking and completing the Project, and has become acquainted with the

labor conditions, state and local laws and regulations which would affect the proposed work.

Section 4. License. The Bidder warrants that a Contractor's License is ____, is not ____, required, and if required, it possesses Contractor's license number _____ for the State of _____ in which the Project is located and said license expires on _____, 19____.

Section 5. The Bidder warrants that this Proposal is made in good faith and without collusion or connection with any person or persons bidding for the same work.

Section 6. The Bidder warrants that it possesses adequate financial resources and agrees that in the event this Proposal is accepted and a Contractor's Bond is required, it will furnish a Contractor's Bond in the form attached hereto, in a penal sum not less than the maximum Contractor price, with a surety or sureties listed by the United States Treasury Department as Acceptable Sureties.

In the event that the surety or sureties on the performance bond delivered to the Owner contemporaneously with the execution of the Contract or on any bond or bonds delivered in substitution therefore or in addition thereto shall at any time become unsatisfactory to the Owner or the Administrator, the Bidder agrees to deliver to the Owner another or an additional bond.

Article II—Construction

Section 1. Time and Manner of Work.

(a) Bidder agrees to commence work on the Project on a date (hereinafter called the ''Commencement Date'') which shall be determined by the Engineer after notice in writing of approval of the Contract by the Administrator, but in no event will the Commencement Date be later than _____ calendar days after date of approval of the Contract by the Administrator. The Bidder further agrees to prosecute diligently and to complete construction in strict accordance with the Specifications and Drawings within _____ (_____) calendar days (excluding Sundays) after Commencement Date.

(b) The time for Completion of Clearing shall be extended for the period of any reasonable delay which is due exclusively to causes beyond the control and without the fault of the Bidder, including Acts of God, fires, floods, inability to obtain materials and acts or omissions of the Owner with respect to matters for which the Owner is solely responsible: Provided however, that no such extension of time for completion shall be granted the Bidder unless within ten (10) days after the happening of any event relied upon by the Bidder for such an extension of time the Bidder shall have made a request therefore in writing to the Owner, and provided further that no delay in such time of completion or in the progress of the work which results from any of the above causes except acts or omission of the Owner, shall result in any liability on the part of the Owner.

(c) The sequence of construction shall be as set forth below, the numbers or names being the designations of extensions or areas (hereinafter called the ''Sections'') corresponding to the numbers or names shown on the maps attached hereto, or if no Sections are set forth below, the sequence of construction shall be as determined by the Bidder, subject to the approval of the Engineer _____.

(d) The Owner, acting through the Engineer and with the approval of the Administrator[1], may from time to time during the progress of the work on the Project make such changes in additions to or subtractions from the Specifications, Drawings, and sequence of construction provided for in the previous paragraph which are part of the Contractor's Proposal as conditions may warrant: Provided, however, that if any change in the construction to be done shall require an extension of time, a reasonable extension will be granted if the Bidder shall make a written request therefore to the Owner within ten (10) days after any such change is made. And provided further, that if the cost to the Bidder of construction of the Project shall be materially increase by any such change or addition, the Owner shall pay the Bidder for the reasonable cost thereof in accordance with a Contract Amendment signed by the Owner and the Bidder and approved by the Administrator[2], but no claim for additional compensation for any such change or addition will be considered unless the Bidder shall have made a written request therefore to the Owner prior to the commencement of work in connection with such change or addition.

(e) The Bidder will not perform any work hereunder on Sundays unless there is urgent need for such Sunday work and the Owner consents thereto in writing. The time for completion specified in subsection (a) of this Section 1 shall not be affected in any way by inclusion of this subsection nor by the Owner's consent or lack of consent to Sunday work hereunder.

---

[1] As long as the total price of this contract including all amendments is less than 120 percent of the original contract price as stated in the acceptance hereto, amendments executed on RUS Form 238 are not subject to the approval of the Administrator. Whenever an amendment to this contract causes the total amended contract to exceed 120 percent of the original contract price, that amendment and all subsequent amendments to this contract shall be made subject to the approval of the Administrator.

[2] See Footnote 1.

Section 2. Environmental Protection. The Bidder shall perform work in such a manner as to maximize preservation of beauty, conservation of natural resources, and minimize marring and scarring of the landscape and silting of streams. There should be no deposition of trash in streams or waterways. Herbicides, other chemicals or their containers should not be deposited in or near streams, waterways or pastures. The Bidder will be required to follow, under the general direction of the engineer, the criteria relating to environmental protection as specified herein by the engineer.

Section 3. Supervision and Inspection.

(a) The Bidder shall cause the work on the Project to receive constant supervision by a competent superintendent (hereinafter called the ''Superintendent'') who shall be present at all times during working hours where work is being carried on. The Bidder shall also employ in connection with the Project, capable, experienced and reliable foremen and such skilled workmen as may be required for the various classes of work to be performed. Directions and instructions given to the Superintendent shall be binding upon the Bidder.

(b) The Owner reserves the right to require the removal from the Project of any employee of the Bidder if in the judgment of the Owner such removal shall be necessary in order to protect the interest of the Owner. The Owner or the Supervisor, if any, shall have the right to require the Bidder to increase the number of its employees and to increase or change the amount or kind of tools and equipment if at any time the progress of the work shall be unsatisfactory to the Owner or Supervisor; but the failure of the Owner or Supervisor to give any such directions shall not relieve the Bidder of its obligations to complete the work within the time and in the manner specified in this proposal.

(c) The manner of carrying out the Project, and all materials and equipment used therein, shall be subject to the inspection, tests and approval of the Owner and the Administrator, and the Bidder shall furnish all information required by the Owner or by the Administrator concerning the nature or source of any materials incorporated or to be incorporated in the Project. The Owner and the Administrator shall have the right to inspect all payrolls, invoices of materials, and other data and records of the Bidder and of any subcontractor, relevant to the Project. The Bidder shall provide all reasonable facilities necessary for such inspection and tests and shall maintain an office at the site of the Project, with telephone service where obtainable and at least one office employee to whom directions and instructions of the Owner may be delivered. Delivery of such directions or instructions in writing to the employee of the Bidder at such office shall constitute delivery to the Bidder. The Bidder shall have an authorized agent accompany the Engineer when final inspection is made and, if requested by the Owner, when any other inspection is made.

(d) In the event that the Owner, or the Administrator, shall determine that the work contains or may contain numerous defects, it shall be the duty of the Bidder and the Bidder's Surety or Sureties, if any, to have an inspection made by an engineer approved by the Owner and the Administrator for the purpose of determining the exact nature, extent and location of such defects.

(e) The Engineer may recommend to the Owner that the Bidder suspend the work wholly or in part for such period or periods as the Engineer may deem necessary due to unsuitable weather or such other conditions as are considered unfavorable for the satisfactory prosecution of the work or because of the failure of the Bidder to comply with any of the provisions of the Contract: Provided, however, that the Bidder shall not suspend work pursuant to this provision without written authority from the Owner to do so. The time of completion hereinabove set forth shall be increased by the number of days of any such suspension, except when such suspension is due to the failure of the Bidder to comply with any of the provisions of this Contract. In the event that work is suspended by the Bidder with the consent of the Owner, the Bidder before resuming work shall give the Owner at least twenty-four (24) hours notice thereof in writing

Section 4. Unsuitable Workmanship. The acceptance of any workmanship by the Owner or the Engineer shall not preclude the subsequent rejection thereof if such workmanship shall be found to be unsuitable. Workmanship found unsuitable before final acceptance of the work shall be remedied, by and at the expense of the Bidder. The Bidder shall not be entitled to any payment hereunder so long as any unsuitable workmanship in respect to the Project, of which the Bidder shall have had notice, shall not have been remedied.

Article III—Payments and Release of Liens

Section 1. Payments to Bidder.

(a) Within the first fifteen (15) days of each calendar month, the Owner shall make partial payment to the Bidder for work accomplished during the preceding calendar month on the basis of completed rights-of-way clearing units furnished and certified to by the Bidder, recommended by the Engineer and approved by the Owner solely for the purposes of payment: Provided, however, that such approval shall not be deemed approval of the workmanship or materials. Only ninety percent (90%) of each such estimate shall be paid by the Owner to the Bidder prior to Completion of the Project: Provided, however, that at any time after work,

which, in the sole determination of the Engineer, amounts to fifty percent (50%) of the maximum contract price has been completed, the Owner may elect, in lieu of paying ninety percent (90%) of each such subsequent estimate, to pay each such subsequent estimate in full. Upon completion by the Bidder of the Project, the Engineer will prepare a Final Inventory of the Project showing the total number and character of rights-of-way clearing units and, after checking such inventory with the Bidder, will certify it to the Owner, together with a certificate of the total cost of the construction performed. Upon the approval of such certificates by the Owner and the Administrator, the Owner shall make payment to the Bidder of all amounts to which the Bidder shall be entitled thereunder which shall not have been paid: Provided, however, that such final payments shall be made not later than ninety (90) days after the date of Completion of Construction of the Project, as specified in the Certificate of Completion, unless withheld because of the fault of the Bidder.

(b) The Bidder shall be paid on the basis of the number of rights-of-way clearing units actually completed at the direction of the Owner shown by the inventory based on the staking sheets or structure lists; Provided, however, that the total cost shall not exceed the maximum contract price for the construction of the Project as set forth in the Acceptance, unless such excess shall have been approved in writing by the Administrator.

(c) Notwithstanding the provisions of Section 1 (a) above, the Bidder may, by giving written notice thereof to the Owner elect to receive payment in full for any Section of the Project upon:

(1) completion of such Section as certified by the Engineer and approved by the Owner and the Administrator;

(2) submission to the Owner and the Administrator of the releases of lien and the certificate referred to in Section 2 hereof;

(3) approval by the Owner and the Administrator of the inventory in respect of such Section; and

(4) submission to the Owner and the Administrator of the consent in writing by the Surety or Sureties, if any, on the Contractor's Bond to payment in full for such Section prior to Completion of Project.

If no Sections are designated in Article II, Section 1 (c), the term ''Section'' shall mean for purposes of this subsection (a) and Article IV, Section 3 (b) only, a part of the Project as designated by the Owner which represents at least twenty-five percent (25%) of the maximum Contract price as stated in Article III, Section 1.

(d) Interest at the rate of ___ percent[3] (___%) per annum shall be paid by the Owner to the Bidder on all unpaid balances due on monthly estimates, commencing fifteen (15) days after the due date; provided the delay in payment beyond the due date is not caused by any condition within the control of the Bidder. The due date for purposes of such monthly payment shall be the fifteenth day of each calendar month provided (1) the Bidder on or before the fifth day of such month shall have submitted its certification of rights-of-way clearing units completed during the preceding month and (2) the Owner on or before the fifteenth day of such month shall have approved such certification. If, for reasons not due to the Bidder's fault, such approval shall not have been given on or before the fifteenth day of such month, the due date for purposes of this subsection (d) shall be the fifteenth day of such month notwithstanding the absence of the approval of the certification.

(e) Interest at the rate of ___ percent[4] (___%) per annum shall be paid by the Owner to the Bidder on the final payment for the Project or any completed Section thereof, commencing fifteen (15) days after the due date. The due date for purposes of such final payment shall be the date of approval by the Administrator of all of the documents requiring such approval, as a condition precedent to the making of final payment, or ninety (90) days after the date of Completion of Construction of the Project, as specified in the Certificate of Completion, whichever date is earlier.

(f) No payment shall be due while the Bidder is in default in respect of any of the provisions of this Contract and the Owner may withhold from the Bidder the amount of any claim by a third party against either the Bidder or the Owner based upon an alleged failure of the Bidder to perform the work hereunder in accordance with the provisions of this Contract.

Section 2. Release of Liens and Certificate of Contractor. (See sample RUS Form 224, Waiver and Release of Lien and sample RUS Form 231, Certificate of Contractor.) Upon the Completion of Clearing by the Bidder (or any Section thereof if the Bidder shall elect to receive payment in full for any section when completed as provided above) but prior to final payment to the Bidder the Bidder shall deliver to the Owner, in duplicate, releases of all liens and of rights to claim any lien, in the form attached hereto from all manufacturers, materialmen, and subcontractors furnishing services or materials

[3] The Owner shall insert a rate equal to the lowest ''Prime Rate'' listed in the ''Money Rates'' section of the Wall Street Journal on the date such invitation to bid is issued.

[4] See Footnote 3.

for the Project or such Section and a certificate in the form attached hereto to the effect that all labor used on or for the Project or such Section has been paid and that all such releases have been submitted to the Owner for approval.

Section 3. Payments to Subcontractors. The Bidder shall pay each subcontractor, if any, within five (5) days after receipt of any payment from the Owner, the amount thereof allowed the Bidder for and on account of work performed by each subcontractor.

Article IV—Particular Undertakings of the Bidder

Section 1. Protection to Persons and Property. The Bidder shall at all times take all reasonable precautions for the safety of employees on the work and of the public, and shall comply with all applicable provisions of Federal, State, and Municipal safety laws and building and construction codes, as well as the safety rules and regulations of the Owner. All machinery and equipment and other physical hazards shall be guarded in accordance with the ''Manual of Accident Prevention in Construction'' of the Associated General Contractors of America unless such instructions are incompatible with Federal, State, or Municipal laws or regulations.

The following provisions shall not limit the generality of the above requirements:

(a) The Bidder shall at no time and under no circumstances cause or permit any employee of the Bidder to perform any work upon energized lines, or upon poles carrying energized lines, unless otherwise specified in the Notice and Instructions to Bidders.

(b) The Bidder shall so conduct the construction of the Project as to cause the least possible obstruction of Public highways.

(c) The Bidder shall provide and maintain all such guard lights and other protection for the public as may be required by applicable statutes, ordinances and regulations or by local conditions.

(d) The Bidder shall do all things necessary or expedient to properly protect any and all parallel, converging and intersecting lines, joint line poles, highways and any and all property of others from damage, and in the event that any such parallel, converging and intersecting lines, joint line poles, highways or other property are damaged in the course of the construction of the Project, the Bidder shall at its own expense restore any or all of such damaged property immediately to as good a state as before such damage occurred.

(e) Where the right-of-way of the Project traverses cultivated lands, the Bidder shall limit the movement of its crews and equipment so as to cause as little damage as possible to crops, orchards or property and shall endeavor to avoid marring the lands. All fences which are necessarily opened or moved during the construction of the Project shall be replaced in as good condition as they were found and precautions shall be taken to prevent the escape of livestock. The Bidder shall not be responsible for loss of or damage to crops, orchards or property (other than livestock) on the right-of-way necessarily incident to the construction of the Project and not caused by negligence or inefficient operation of the Bidder. The Bidder shall be responsible for all other loss of or damage to crops, orchards, or property, whether on or off the right-of-way, and for all loss of or damage to livestock caused by the construction of the Project. The right-of-way for purposes of this said section shall consist of area extending _____ feet on both sides of the center line of the poles along the route of the Project lines, plus such area reasonably required by the Bidder for access to the route of the Project lines from Public roads to carry on construction activities.

(f) The Project, from the commencement of work to completion, or to such earlier date or dates when the Owner may take possession and control in whole or in part as hereinafter provided shall be under the charge and control in whole or in part as hereinafter provided shall be under the charge and control of the Bidder and during such period of control by the Bidder all risks in connection with the construction of the Project and the materials to be used therein shall be borne by the Bidder. The Bidder shall make good and fully repair all injuries and damages to the Project or any portion thereof under the control of the Bidder by reason of any Act of God or other casualty or cause whether or not the same shall have occurred by reason of the Bidder's negligence.

(i) To the maximum extent permitted by law, Bidder shall defend, indemnify, and hold harmless Owner and Owner's directors, officers, and employees from all claims, causes of action, losses, liabilities, and expenses (including reasonable attorney's fees) for personal loss, injury, or death to persons (including but not limited to Bidder's employees) and loss, damage to or destruction of Owner's property or the property of any other person or entity (including but not limited to Bidder's property) in any manner arising out of or connected with the Contract, or the materials or equipment supplied or services performed by Bidder, its subcontractors and suppliers of any tier. But nothing herein shall be construed as making Bidder liable for any injury, death, loss, damage, or destruction caused by the sole negligence of Owner.

(ii) To the maximum extent permitted by law, Bidder shall defend, indemnify, and hold harmless Owner and Owner's directors, officers, and employees from all liens and claims filed or asserted against Owner, its directors, officers, and employees, or Owner's property or facilities, for services performed or materials or equipment furnished by Bidder, its subcontractors and suppliers of any tier, and

from all losses, demands, and causes of action arising out of any such lien or claim. Bidder shall promptly discharge or remove any such lien or claim by bonding, payment, or otherwise and shall notify Owner promptly when it has done so. If Bidder does not cause such lien or claim to be discharged or released by payment, bonding, or otherwise, Owner shall have the right (but shall not be obligated) to pay all sums necessary to obtain any such discharge or release and to deduct all amounts so paid from the amount due Bidder.

(iii) Bidder shall provide to Owner's satisfaction evidence of Bidder's ability to comply with the indemnification provisions of subparagraphs i and ii above, which evidence may include but may not be limited to a bond or liability insurance policy obtained for this purpose through a licensed surety or insurance company.

(g) Any and all excess earth, rock, debris, underbrush and other useless material shall be removed by the Bidder from the site of the Project as rapidly as practicable as the work progresses. There should no disposition of trash in streams or waterways. Herbicides, other chemicals or their containers should not be deposited in or near streams, waterways or pastures.

(h) Upon violation by the Bidder of any of the provisions of this section, after written notice of such violation given to the Bidder by the Engineer or the Owner, the Bidder shall immediately correct such violation. Upon failure of the Bidder so to do the Owner may correct such violation at the Bidder's expense: Provided, however, that the Owner may, if it deems it necessary or advisable, correct such violation at the Bidder's expense without such prior notice to the Bidder.

(i) The Bidder shall submit to the Owner monthly reports in duplicate of all accidents, giving such data as may be prescribed by the Owner.

(j) The Bidder shall not proceed with the cutting of trees or clearing of right-of-way without written notification from the Owner that proper authorization has been received from the owner of the property, and the Bidder shall promptly notify the Owner whenever any landowner objects to the trimming or felling of any trees or the performance of any other work on its land in connection with the Project and shall obtain the consent in writing of the Owner before proceeding in any such case.

Section 2. Insurance. The Bidder shall take out and maintain throughout the contract period insurance of the following types and minimum amounts:

(a) Workers' compensation and employers' liability insurance, as required by law, covering all their employees who perform any of the obligations of the contractor, engineer, and architect under the contract. If any employer or employee is not subject to the workers' compensation laws of the governing state, then insurance shall be obtained voluntarily to extend to the employer and employee coverage to the same extent as though the employer or employee were subject to the workers' compensation laws.

(b) Public liability insurance covering all operations under the contract shall have limits for bodily injury or death of not less than $1 million each occurrence, limits for property damage of not less than $1 million each occurrence, and $1 million aggregate for accidents during the policy period. A single limit of $1 million of bodily injury and property damage is acceptable. This required insurance may be in a policy or policies of insurance, primary and excess including the umbrella or catastrophe form.

(c) Automobile liability insurance on all motor vehicles used in connection with the contract, whether owned, nonowned, or hired, shall have limits for bodily injury or death of not less than $1 million per person and $1 million per occurrence, and property damage limits of $1 million for each occurrence. This required insurance may be in a policy or policies of insurance, primary and excess including the umbrella or catastrophe form.

The Owner shall have the right at any time to require public liability insurance and property damage liability insurance greater than those required in subsection ''b'' and ''c'' of this Section. In any such event, the additional premium or premiums payable solely as the result of such additional insurance shall be added to the Contract price.

The Owner shall be named as Additional Insured on all policies of insurance required in subsections ''b'' and ''c'' of this Section.

The policies of insurance shall be in such form and issued by such insurer as shall be satisfactory to the Owner. The Bidder shall furnish the Owner a certificate evidencing compliance with the foregoing requirements which shall provide not less than (30) days prior written notice to the Owner of any cancellation or material change in the insurance.

Section 3. Delivery of Possession and Control to Owner.

(a) Upon written request of the Owner the Bidder shall deliver to the Owner full possession and control of any portion of the Project provided the Bidder shall have been paid at least ninety percent (90%) of the cost of construction of such portion. Upon such delivery of the possession and control of any portion of the Project to the Owner, the risk and obligations of the Bidder as set forth in Article IV, Section 1(f) hereof with respect to such portion of the Project so delivered to the Owner shall be terminated: Provided, however, that nothing herein contained shall

relieve the Bidder of any liability with respect to defective materials and workmanship as contained in Article II, Section 4 hereof.

(b) Where the construction of a Section as hereinbefore defined in Article II, Section 1 (c) and Article III, Section 1(c) shall have been completed by the Bidder, the Owner agrees, after receipt of a written request from the Bidder, to accept delivery of possession and control of such Section upon the issuance by the Engineer of a written statement that the Section has been inspected and found acceptable by the Engineer. Upon such delivery of the possession and control of any such Section to the Owner, the risk and obligations of the Bidder as set forth in Article IV, Section 1(f) hereof with respect to such Section so delivered to the Owner shall be terminated; Provided, however, that nothing herein contained shall relieve the Bidder of any liability with respect to defective materials or workmanship as contained in Article II, Section 4 hereof. Section 4. Assignment of Guarantees. All guarantees of materials and workmanship running in favor of the Bidder shall be transferred and assigned to the Owner prior to the time the Bidder receives final payment.

Article V—Remedies

Section 1. Completion of Bidder's Default. If default shall be made by the Bidder or by any subcontractor in the performance of any of the terms of this Proposal, the Owner, without in any manner limiting its legal and equitable remedies in the circumstances, may serve upon the Bidder and the Surety or Sureties, if any, upon the Contractor's Bond or Bonds a written notice requiring the Bidder to cause such default to be corrected forthwith. Unless within twenty (20) days after the service of such notice upon the Bidder such default shall be corrected or arrangements for the correction thereof satisfactory to both the Owner and the Administrator shall be made by the Bidder or its Surety or Sureties if any, the Owner may take over the Project and prosecute the same to completion by contract or otherwise for the account and at the expense of the Bidder, and the Bidder and its Surety or Sureties if any, shall be liable to the Owner for any cost or expense in excess of the contract price occasioned thereby. In such event the Owner may take possession of and utilize, in completing the construction of the Project, any materials, tools, supplies, equipment, appliances, and plant belonging to the Bidder or any of its subcontractors, which may be situated at the site of the Project. The Owner in such contingency may exercise any rights, claims or demands which the Bidder may have against third persons in connection with this contract and for such purpose the Bidder does hereby assign, transfer and set over unto the Owner all such rights, claims and demands.

Section 2. Liquidated Damages. The time of the Completion of the Project is of the essence of the Contract. Should the Bidder neglect, refuse or fail to complete the Project within the time herein agreed upon, after giving effect to extensions of time, if any, herein provided, then, in that event and in view of the difficulty of estimating with exactness damages caused by such delay, the Owner shall have the right to deduct from and retain out of such moneys which may be then due, or which may become due and payable to the Bidder the sum of _____ dollars (_____) per day for each and every day that such construction is delayed in its completion beyond the specified time, as liquidated damages and not as a penalty; if the amount due and to become due from the Owner to the Bidder is insufficient to pay in full any such liquidated damages, the Bidder shall pay to the Owner the amount necessary to effect such payment in full; Provided, however, that the Owner shall promptly notify the Bidder in writing of the manner in which the amount retained, deducted or claimed as liquidated damages was computed.

Section 3. Cumulative Remedies. Every right or remedy herein conferred upon or reserved to the Owner or the Government or the Administrator shall be cumulative, shall be in addition to every right and remedy now or hereafter existing at law or in equity or by statute and the pursuit of any right or remedy shall not be construed as an election: Provided, however, that the provision of Section 2 of this Article shall be the exclusive measure of damages for failure by the Bidder to complete the Project within the time herein agreed upon.

Article VI—Miscellaneous

Section 1. Definitions.

(a) The term ''Administrator'' shall mean the Administrator of the Rural Utilities Service of the United States of America and his duly authorized representatives or any other person in whom or authority in which may be vested the duties and functions which the Administrator is now authorized by law to perform.

(b) The term ''Engineer'' shall mean the engineer employed by the Owner with the approval of the Administrator, to provide engineering services for the Project and said Engineer's duly authorized assistants and representatives.

(c) The term ''Supervisor'' shall mean the person, if any, appointed by the Administrator as the representative of the Government under the provisions of the Loan Contract providing for such appointment in special cases. The term is limited to such special representative of the Government, if any, who is responsible exclusively to the

Administrator and does not refer to the Manager or any other person employed by the Owner and responsible to it.

(d) The term ''Completion of Clearing'' shall mean full performance by the Bidder of the Bidder's obligations under the Contract and all amendments and revisions thereof except the Bidder's obligations in respect of (1) Releases of liens and Certificate of Contractor under Article III, Section 2 hereof, (2) the inventory referred to in Article III, Section 1 hereof, and (3) other final documents. The term ''Completion of the Project'' shall mean full performance by the Bidder of the Bidder's obligations under the Contract and all amendments and revisions thereof. The Certificate of Completion signed by the Engineer and approved in writing by the Owner and the Administrator, shall be the sole and conclusive evidence as to the date of Completion of Clearing.

Section 2. Patent Infringement. The Bidder shall save harmless and indemnity the Owner from any and all claims, suits and proceedings for the infringement of any patent or patents covering any materials or equipment used in construction of the Project.

Section 3. Permits for Explosives. All permits necessary for the handling or use of dynamite or other explosives in connection with the construction of the Project shall be obtained by and at the expense of the Bidder.

Section 4. Compliance with Statutes and Regulations. The Bidder shall comply with all applicable statutes, ordinances, rules, and regulations pertaining to the work. The Bidder acknowledges that it is familiar with the Rural Electrification Act of 1936, as amended, the so-called ''Kick-Back'' Statute (48 Stat. 948), and regulations issued pursuant thereto, and 18 U.S.C. Sections 286, 287 and 1001 as amended. The Bidder understands that the obligations of the parties hereunder are subject to the applicable regulations and orders of Governmental Agencies leaving jurisdiction in the premises.

Section 5. Equal Opportunity Provisions.

(a) Bidder's Representations.

The Bidder represents that:

It has _____, does not have _____, 100 or more employees, and if it has, that it has _____, has not _____, furnished the Equal Employment Opportunity-Employers Information Report EEO–1, Standard Form 100, required of employers with 100 or more employees pursuant to Executive Order 11246 and Title VII of the Civil Rights Act of 1964.

The Bidder agrees that it will obtain, prior to the award of any subcontract for more than $10,000 hereunder to a subcontractor with 100 or more employees, a statement, signed by the proposed subcontractor, that the proposed subcontractor has filed a current report on Form 100. The Bidder agrees that if it has 100 or more employees and has not submitted a report on Standard Form 100 for the current reporting year and that if this contract will amount to more than $10,000, the Bidder will file such report, as required by law, and notify the Owner in writing of such filing prior to the Owner's acceptance of this Proposal.

(b) Equal Opportunity Clause. During the performance of this contract, the Bidder agrees as follows:

(1) The Bidder will not discriminate against any employee or applicant for employment because of race, color, religion, sex, or national origin. The Bidder will take affirmative action to ensure that applicants are employed, and that employees are treated during employment without regard to their race, color, religion, sex, or national origin. Such action shall include, but not be limited to, the following: Employment, upgrading, demotions or transfer; recruitment or recruitment advertising; layoff or termination; rates of pay or other forms of compensation; and selection for training, including apprenticeship. The Bidder agrees to post in conspicuous places, available to employees and applicants for employment, notices to be provided setting forth the provisions of this Equal Opportunity Clause.

(2) The Bidder will, in all solicitations or advertisements for employees placed by or on behalf of the Bidder, state that all qualified applicants will receive consideration for employment without regard to race, color, religion, sex, or national origin.

(3) The Bidder will send to each labor union or representative of workers, with which it has a collective bargaining agreement or other contract or understanding, a notice to be provided advising the said labor union or worker's representatives of the Bidder's commitments under this section, and shall post copies of the notice in conspicuous places available to employees and applicants for employment.

(4) The Bidder will comply with all provisions of Executive Order 11246 of September 24, 1965, and of the rules, regulations, and relevant orders of the Secretary of Labor.

(5) The Bidder will furnish all information and reports required by Executive Order 11246 of September 24, 1965, and by rules, regulations, and orders of the Secretary of Labor, or pursuant thereto, and will permit access to its books, records, and accounts by the administering agency and the Secretary of Labor for purposes of investigation to ascertain compliance with such rules, regulations, and orders.

(6) In the event of the Bidder's noncompliance with the Equal Opportunity Clause of this Contract or with any of the said rules, regulations, or orders, this Contract may be cancelled, terminated, or suspended in whole or in part, and the Bidder may be declared ineligible for further Government contracts of federally assisted construction contracts in accordance with procedures authorized in

Executive Order 11246 of September 24, 1965, and such other sanctions may be imposed and remedies invoked as provided in Executive Order 11246 of September 24, 1965, or by rule, regulation, or order of the Secretary of Labor, or as provided by law.

(7) The Bidder will include this Equal Opportunity Clause in every subcontract or purchase order unless exempted by the rules, regulations, or order of the Secretary of Labor issued pursuant to Section 204 of Executive Order 11246 of September 24, 1965, so that such provisions will be binding upon each subcontractor or vendor. The Bidder will take such action with respect to any subcontract or purchase order as the administering agency may direct as a means of enforcing such provisions including sanctions for noncompliance: Provided, however, that in the event a Bidder becomes involved in, or is threatened with, litigation with a subcontractor or vendor as a result of such direction by the administering agency, the Bidder may request the United States to enter into such litigation to protect the interests of the United States.

(c) Certificate of Nonsegregated Facilities. The Bidder certifies that it does not maintain or provide for its employees any segregated facilities at any of its establishments, and that it does not permit its employees to perform their services at any location, under its control, where segregated facilities are maintained. The Bidder certifies further that it will not maintain or provide for its employees any segregated facilities at any of its establishments, and that it will not permit its employees to perform their services at any location, under its control, where segregated facilities are maintained. The Bidder agrees that a breach of this certification is a violation of the Equal Opportunity Clause in this contract. As used in this certification, the term ''segregated facilities'' means any waiting rooms, work areas, restrooms and washrooms, restaurants and other eating areas, timeclocks, locker rooms and other storage or dressing areas, parking lots, drinking fountains recreation or entertainment areas, transportation, and housing facilities provided for employees which are segregated by explicit directive or are in fact segregated on the basis of race, color, religion, or national origin, because of habit, local custom, or otherwise. The Bidder agrees that (except where it has obtained identical certifications from proposed subcontractors for specific time periods) it will obtain identical certifications from proposed subcontractors prior to the award of subcontracts exceeding $10,000 which are not exempt from the provisions of the Equal Opportunity Clause, and that it will retain such certifications in its files.

Section 6. Franchises and Rights-of-Way. The Bidder shall be under no obligation to obtain or assist in obtaining: Any franchises, authorizations, permits or approvals required to be obtained by the Owner from Federal, State, County, Municipal or other authorities; any rights-of-way over private lands; or any agreements between the Owner and third parties with respect to the construction and operation of the Project.

Section 7. Nonassignment of Contract. The Bidder shall perform directly and without subcontracting not less than twenty-five per centum (25%) of the construction of the Project, to be calculated on the basis of the total contract price. The Bidder shall not assign the contract effected by an acceptance of this proposal or any interest in any funds that may be due or become due hereunder or enter into contract with any person, firm or corporation for the performance of the Bidder's obligations hereunder or any part thereof, without the approval in writing of the Owner and of the Surety or Sureties, if any, on any bond furnished by the Bidder for the faithful performance of the Bidder's obligation hereunder. If the Bidder, with the consent of the Owner and any Surety or Sureties, if any, on the Contractor's Bond or Bonds, shall enter into a subcontract with any subcontractor for the performance of any part of this contract, the Bidder shall be as fully responsible to the Owner and the Government for the acts and omissions of such subcontractor and of persons employed by such subcontractor as the Bidder would be for its own acts and omissions and those of persons directly employed by it.

Section 8. Extension to Successors and Assigns. Each and all of the covenants and Agreements herein contained shall extend to and be binding upon the successors and assigns of the parties hereto.

Section 9. Contractor. Upon acceptance of this Proposal, the successful Bidder shall be the Contractor and all references in the Proposal to the Bidder shall apply to the Contractor.

Section 10. Approval by the Administrator. No acceptance of this Proposal shall become effective until approval in writing of the Administrator; Provided, however that no obligations shall arise hereunder unless such approval is given within sixty (60) days from the date of acceptance by the Owner.

_____ (Bidder)
By _____ (President)
_____ (Address)
Attest: _____ (Secretary)
Date _____

The Proposal must be signed with the full name of the Bidder. If the Bidder is a partnership, the Proposal must be signed in the partnership name by a partner. If the Bidder is a corporation, the Proposal must be signed in the Corporate name by a duly authorized officer and the corporate seal affixed and attested by the Secretary of the Corporation.

Description of Units

TM–12. The unit is 1,000 feet in length and _____ (_____) feet in width (to be measured _____ (_____) feet on one side of pole line or centerline of structures) of actual clearing of right-of-way. This includes clearing of underbrush, tree removal, and such tree trimming as is required so that the right-of-way, except for tree stumps which shall not exceed _____ in height, shall be clear from the ground up on one side of the line of poles carrying conductors (See Detail A, Drawing TM–12–2A.) The length of actual clearing shall be measured in a straight line parallel to the horizontal line between poles or centerline of structures and across the maximum dimension of foliage cleared projected to the ground line (See Detail B, Drawing TM–12–2A.) All trees and underbrush across the width of the right-of-way shall be considered to be grouped together as a single length in measuring the total length of clearing (See Detail C, Drawing TM–12–2A.) Spaces along the right-of-way in which no trees are to be removed or trimmed or underbrush cleared shall be omitted from the total measurement. All lengths thus arrived at, added together and divided by 1,000 shall give the number of TM–12 units of clearing. The Bidder shall not remove or trim shade, fruit, or ornamental trees unless so directed by the Engineer in writing.

TM–12 (1). This unit is identical with TM–12, except the full width of the right-of-way to be cleared shall be _____ feet wide (to be measured _____ (_____) feet on each side of the pole line or centerline of structures) (See Detail D, Drawing TM–12–2A.)

TM–13. The unit, for purpose of quoting, is 1,000 feet in length of clearing off the right-of-way. The Engineer will select those trees off the right-of-way that he deems to be a hazard to the line and will designate them to the Bidder in writing as danger trees. When so designated, the Bidder shall remove or top such trees at his option except that the Bidder shall trim and not remove shade, fruit or ornamental trees unless otherwise directed by the Engineer in writing (See Drawings TM–12–2A and TM–13 for examples of danger trees.)

The measurement of length of right-of-way to be cleared shall be considered as a straight line parallel to the horizontal line between poles or centerline of structures, such measurement of length to be based on maximum dimension of foliage (not trunk) projected to the ground line (See Details E, F, G and H, Drawing TM–12–2A.) Dead trees having no foliage shall be measured across the maximum dimension and multiplied by two. (See Detail F, Drawing TM–12–2A.) Each tree so removed shall be added together to determine the total length of clearing. All lengths thus arrived at, added together and divided by 1,000 shall give the number of TM–13 units (Example: Details E, F, G and H, Drawing TM–12–2A, total 0.10 of a TM–13 unit.)

TMC–12, TMC–12 (1). These units are identical to the respective TM units except that chemical treatment of stumps is required in addition to the clearing of underbrush, tree removal and tree trimming.

TM–14. The unit is 1,000 feet in length and _____ (_____) feet in width (to be measured _____ (_____) feet on one side of right-of-way center line) of actual clearing of right-of-way. Trees and underbrush should be cleared from the ground up within 10 feet of any structure location. The Engineer will mark the trees and brush to be cleared to provide ''undulating'' boundaries. Low growing trees and brush are to be left in the right-of-way to the extent it will not be hazardous to the line or will not interfere with the service road. The length of actual clearing shall be measured in a straight line parallel to the horizontal line between poles or center line of structures and across the maximum dimension of foliage cleared projected to the ground line (See Detail B, Drawing TM–12–2A.) All trees and underbrush cleared across the right-of-way shall be considered to be grouped together as a single length in measuring the total length of clearing (See Detail C, Drawing TM–12–2A.) Spaces along the right-of-way in which no trees are to be removed or trimmed or underbrush cleared shall be omitted from the total measurement.

TM–14 (1). This unit is identical with TM–14 except the full width of the right-of-way to be cleared shall be _____ (_____) feet wide (See Detail D, Drawing TM–12–2A.)

TM–15. The unit is 1,000 feet in length and _____ (_____) feet in width (to be measured _____ (_____) feet on one side of the right-of way center line) of actual clearing of the right-of-way. Trees and underbrush should be cleared from ground up within 10 feet of any structure location. The Engineer will mark the trees and brush to be cleared to provide a ''feathered'' appearance in the right-of-way. Low growing trees and brush are to be left in the right-of-way to the extent it will not be hazardous to the line or will not interfere with the service road.

The length of actual clearing shall be measured in a straight line parallel to the horizontal line between poles or center line of structures and across the maximum dimension of foliage cleared projected to ground line (See Detail B, Drawing TM–12–2A). All trees and underbrush cleared across the right-of-way shall be considered to be grouped together as a single length in measuring the total length of clearing (See Detail C, Drawing TM–12–2A). Spaces along the right-of-way in which no trees are to be removed or trimmed or underbrush cleared shall be omitted from the total measurement.

TM–15 (1). This unit is identical to TM–15 except the full width of the right-of-way to be cleared shall be _____ (_____) feet wide (See Detail D, Drawing TM–12–2A).

Additional Requirements. (When Specifying TM units denote type of disposal A or B).

A. Trees, brush, branches and refuse shall, without delay, be disposed of by such of the following methods as an Engineer will direct (Engineer to strike out methods not to be used).

1. Burned
2. Piled on one side of right-of-way
3. Roller chopped and left on right-of-way in such a manner as not to obstruct roads, ditches, drains, etc.
4. Other (Describe) _____

B. Trees that are felled shall be cut to commercial wood lengths, stacked neatly, and left on the right-of-way for the landowner. Commercial wood length means the length designated by the Engineer but in no case shall it be required to be less than _____ (_____) feet. Brush, branches and refuse shall, without delay, be disposed of by such of the following methods as the Engineer will direct (Engineer to strike out methods not to be used).

1. Burned
2. Piled on one side of right-of-way
3. Roller chopped and left on right-of-way in such a manner as not to obstruct roads, ditches, drains, etc.
4. Other (Describe) _____

Transmission Right-of-Way Units

Unit No.	No. of units	Unit price	Extended price

Total _____

Acceptance

Subject to the approval of the Administrator, the Owner hereby accepts the foregoing Proposal of the Bidder, _____ for the construction of the following:

The total contract price is $_____

_____ Owner
By _____ President
_____ Secretary
_____ Date of Contract

Specifications

In preparing the right-of-way, trees shall be removed, underbrush cleared, and trees trimmed so that the right-of-way shall be clear from the ground up as specified in the Proposal. Trees fronting each side of the right-of-way shall be trimmed symmetrically unless otherwise directed by the Engineer. Dead trees beyond the right-of-way which would strike the line in falling shall be removed. Leaning trees beyond the right-of-way which would strike the line in falling and which would require topping if not removed may be removed or topped at the direction of the Engineer.

Where TMC–12, TMC–12–(1) units are specified, the right-of-way shall be cleared in accordance with the instructions in the preceding paragraph and in addition, all stumps one-half inch in diameter and larger shall be sprayed as specified by the Engineer.

[End of clause]

§ 1726.323 Certificate (Buy America), RUS Form 213.

The closeout form in this section shall be used when required by this part.

CERTIFICATE

With respect to compliance with the second paragraph of the Rural Electrification Act of 1938, being Title IV of the Work Relief and Public Works Appropriation Act of 1938 (Public Resolution No. 122, 75th Congress, approved June 21, 1938).

Rural Utilities Service Project _____.

The undersigned, being, the _____[1], in a certain contract No. _____ dated _____, 19 ___, between the undersigned and _____[2], does hereby certify that in the performance of the said contract there have been used or furnished no unmanufactured articles, materials or supplies which have not been mined or produced in the United States, Mexico, or Canada and no manufactured articles, materials or supplies which have not been manufactured in the United States, Mexico, or Canada substantially all from articles, materials or supplies mined, produced or manufactured, as the case may be in the United States, Mexico, or Canada, except to the extent that compliance with the second paragraph of the Rural Electrification Act of 1938, being Title IV of the Work Relief and Public Works Appropriation Act of 938 (Public Resolution No. 122, 75th Congress, approved June 22, 1938) has been waived by the Administrator of the Rural Utilities Service.

_____
By _____
Date _____, 19___

[End of clause]

§ 1726.324 Waiver and release of lien, RUS Form 224.

The closeout form in this section shall be used when required by this part.

[1] Insert ''Contractor.'' ''Subcontractor.'' ''Seller'' Or ''Materialman.'' as the case may be.

[2] Insert the name of the RUS Borrower.

WAIVER AND RELEASE OF LIEN

Whereas the undersigned, _____ (name of manufacturer, materialman or subcontractor) has furnished to _____ (name of contractor) the following: _____ (kind of material and services furnished) for use in the construction of a Project belonging to _____ (name of borrower) and designated by the Rural Utilities Service as _____ (RUS project designation.)

Now, Therefore, the undersigned, _____ (name of manufacturer, materialman or subcontractor) for and in consideration of $_____ and other good and valuable consideration, the receipt whereof is hereby acknowledged, do(es) hereby waive and release any and all liens, or right to or claim of lien, on the above described project and premises, under any law, common or statutory, on account of labor or materials, or both, heretofore or hereafter furnished by the undersigned to or for the account of said _____ (name of contractor) for said project.

Given under my(our) hand(s) and seal(s) this _____ day of _____, 19___. _____ Name of manufacturer, materialman or subcontractor

By _____ President, vice president, partner or owner, or, if signed by other than one of foregoing, accompanied by power of attorney signed by one of the foregoing in favor of the signer. (use designation applicable)

[End of clause]

§1726.325 Certificate of contractor, RUS Form 231.

The closeout form in this section shall be used when required by this part.

CERTIFICATE OF CONTRACTOR

_____, certifies that he is the _____ (Title of Office) of _____ (Name of Contractor), the Contractor, in a Construction Contract No. _____ dated _____, 19___, entered into between the Contractor and _____ (Name of Borrower) the Owner, for the construction of a Project, which bears the Rural Utilities Service Project Designation _____ and that he is authorized to and does make this certification on behalf of said Contractor in order to induce the Owner to make payment to the Contractor, in accordance with the provisions of said Construction Contract.

Undersigned further says that all persons who have furnished labor in connection with said construction have been paid in full, that the names of manufacturers, materialmen and subcontractors that furnished material or services or both in connection with such construction and the kind or kinds of material or services or both so furnished are:

Name _____

Kind of material and service _____

and that the releases of liens executed by all such manufacturers, materialmen and subcontractors have been furnished the Owner.

Date _____

Signature _____

[End of clause]

§1726.326 Construction or equipment contract amendment, RUS Form 238.

The amendment form in this section shall be used when required by this part.

CONSTRUCTION OR EQUIPMENT CONTRACT AMENDMENT

Project Designation _____

Date _____

Amendment No. _____

Contract No. _____

Bond extension attached ___ Yes ___ No

Delivery or Completion Date: Original _____ As Amended _____

Instructions: 1. The Architect-Engineer shall submit three (3) copies of this form for each contract which has been approved by RUS, to the Owner. 2. The Owner will submit the three (3) copies of this form to RUS for approval.

Reasons for, and details and description of the amendment _____

(If additional space is needed, use reverse or separate sheet)

A summary of the original contract price and amendments thereto, including this amendment, follows:

(Amendments which decreased the price are preceded by a (−) minus sign).

Original Contract Price $_____

Amendment Number 1 $_____

Amendment Number 2 $_____

Amendment Number 3 $_____

Amendment Number 4 $_____

Amendment Number 5 $_____

Amendment Number 6 $_____

Amendment Number 7 $_____

Amendment Number 8 $_____

Amended Contract Price $_____

This amendment, providing for an increase of $_____ / decrease of $_____ in the contract price is submitted pursuant to the provisions of said contract. (The Administrator of RUS is hereby authorized to approve this amendment either in whole or in part and to delete such items as do not meet his approval).

To the extent the items hereof are approved the contract shall be amended.

Accepted

_____ Contractor

By _____ President-Owner-Partner (Strike out inapplicable title. If signed by other

than above, power of attorney should be attached or on file with RUS.)
_____ Date
_____ Owner
By _____ President-Board of Directors
_____ Date
Approved
_____ Architect-engineer
_____ Date

Item No.	Reasons for and description of contract amendment No. ___	Labor or installation[1]	Material or equipment[1]	Total
Net total				

[1] Changes in Cost (decrease preceded by (−) minus sign.) To be filled in when applicable.

[End of clause]

§ 1726.327 Material receipt, RUS Form 251.

The receipt form in this section shall be used when a Material Receipt is required by RUS Form 764, 830, or 831.

MATERIALS RECEIPT

Instructions: Prepare three (3) copies. Forward original to Owner, one copy to Contractor and one copy to Engineer.

Date _____

Item[1]	Quantity	Description of item	Manufacturer and catalog No.	Unit price	Extended price
Total					

Notes: 1. Item corresponds with item in list of materials in construction drawings.

Received by _____
For:
_____ Contractor
_____ Owner

[End of clause]

§ 1726.328 Construction inventory (for labor and material contract), RUS Form 254.

The closeout form in this section shall be used when required by this part.

CONSTRUCTION INVENTORY (FOR LABOR AND MATERIAL CONTRACT)

Date _____
Project Designation _____
Borrower _____
Engineer _____
Contractor _____

Amount Payable to Contractor

A. Total Cost of Standard, New And Conversion Assembly Units Installed (Total No. 6, RUS Form 254a) $_____

B. Cost To Remove ''I'' Units (Total No. 7, RUS Form 254a) $_____

C. Amount To Be Credited To Contractor For Materials Removed From Existing Facilities And Returned (Total No. 14, RUS Form 254b) $_____

Subtotal $_____
Deduct:

D. Amount Chargeable To Contractor For Materials In Assembly Units Removed (Total No. 9, RUS Form 254a) $_____

E. Net Amount Of Owner-furnished Materials (Total No. 24 RUS Form 254c) $_____

F. Net Amount Due Contractor (In making final payment to Contractor, the net amount due the Contractor, as shown by this Certification, will be reduced by the sums, if any, due the Owner for liquidated damages, payment made to date, or other sums which the Owner has the right to retain under the terms of the Contract, and signature by all parties does not preclude the retention by the Owner of such amounts.) $_____

Certificate of Engineer

I certify that to the best of my knowledge and belief the attached final inventory correctly shows the total number and character of assembly units installed and removed by the Contractor and that the net amount of $_____ due the Contractor, as shown above, is true and correct.

Engineer _____
By _____
Date _____

Acceptance by Owner

Owner _____
By _____ President
Date _____

Acceptance by Contractor

Firm _____
By _____

Date _____

Instructions

(See RUS Bulletin 1767B–3, Preparation and Use of RUS Form 254, for additional instructions.)

The Engineer will prepare 5 copies of RUS Form 254 and 254a, also 5 copies of Forms 254b and 254c when applicable. Original and 1 copy to be forwarded to RUS, 1 copy to Contractor, 1 copy to Owner, and 1 copy to be retained by Engineer.

Calculation of amount payable to Contractor will employ data taken from Nos. 1 through 25, RUS Forms 254, 254a, 254b, 254c. The amounts to be inserted opposite Items A, B, C, D, and E on RUS Form 254 are indicated in the texts of those items.

Nos. 1 through 17, Forms 254a and 254b: (Form 254b is required only when ''I'' removal units are included in the Contract.)

No.—Source of Information

1 and 2—From tabulation of staking sheets.[1]
3 and 4—From Contract.
5—No. 3 plus No. 4.
6—No. 1 multiplied by No. 5.
7—No. 1 multiplied by No. 3 (for ''I'' units only).
8—From Table C of Contract.
9—No. 1 multiplied by No. 8 for ''I'' removal units only. (Table C relates solely to ''I'' units.)
10, 11, and 12—From Engineer's and Owner's records.
13—From Table D in Contract.
14—No. 12 multiplied by No. 13.
15—From Engineer's records. (Quantities shall be listed opposite the appropriate material items described in No. 11.)
16—From individual stock record card for each material item listed.
17—No. 15 multiplied by No. 16.

Data shown on Form 254c to be presented under the following headings, as appropriate:

Part I Material Items Included in Lists Set Forth in Construction Contract

Part II Other Material Items Furnished by Owner

Nos. 18 through 25: (Form 254c is required only when there are owner-furnished materials.)

No.—Source of Information

18 and 19—From Contract and Material Receipts.
20—From charge-out and credit tickets covering materials issued to and returned by the Contractor.[2]
21—From average unit costs on charge-out and credit tickets relating to this construction, such costs in turn being taken from the average unit costs reflected by the stock record cards for the applicable period.
22—No. 20 multiplied by No. 21.
23—For Part I, from the unit prices specified in the Contract in the ''List of Owner's Materials on Hand'' or the ''List of Materials Ordered by Owner But Not Delivered.''

For Part II, from the actual unit costs to Owner—the same as used in No. 21.

24—No. 20 multiplied by No. 23.
25—No. 24 minus No. 22. (if a minus quantity, enter in parentheses.)

See 7 CFR 1726, Electric System Construction Policies and Procedures, for instructions regarding distribution of the completed form.

Reference should be made to RUS Bulletin 1767B–3, Preparation and Use of RUS Form 254, for instruction in accounting for all contract costs, including the retirement of units removed by the Contractor and the unitization by record units of costs of construction assemblies installed by the Contractor.

RUS Form 254a

Assembly Units

1. Quantity _____
2. Standard (N—New, H—Conversion, I—Removal) _____

DUE TO CONTRACTOR FOR UNITS INSTALLED, CONVERTED, AND REMOVED

3. Labor (Unit Price) _____
4. Material Unit Price (Except I Units) _____
5. Total Unit Price (No. 3 + No. 4) (Except I Units) _____
6. Cost of Construction (No. 1 x No. 5) (Except I Units) _____
7. Cost to Remove ''I'' Units (No. 1 x No. 3) _____

[1] Standard units will be listed first, followed by new units and conversion units, in that order, with all ''I'' removal units being listed last.

[2] The quantities shown in No. 20 should agree with Materials Receipts (RUS Form 251) prepared in connection with the contact. The types of items of material and the quantity of any item of material listed under Part I of the tabulation should be limited to the type of items and should not exceed the quantity of any item of material specified in the construction contract in the ''List of Owner's Materials on Hand'' or the ''List of Materials Ordered by Owner But Not Delivered.'' Any additional items of material or excess quantities over the items specified in such lists are to be shown under Part II of the tabulation.

Amount Chargeable to Contractor for Materials in Assemblies Removed

8. Unit Values (Table C in Contract) _____
9. Total (No. 1 x No. 8) _____
Total (No. 6) _____
Total (No. 7) _____
Total (No. 9) _____

RUS Form 254b

Summary and Classification Of Materials Returned to Owner by Contractor from ''I'' Removal Units

Amounts to be Credited to Contractor for Materials Returned

10. Item Designation _____
11. Description of Material _____
12. Quantity _____
13. Item Value—Table D in Contract _____
14. Total Credit to Contractor (No. 12 x No. 13) _____

Returned Materials Declared Reusable by Engineer

15. Quantity of Items _____
16. Stock Card Item Price _____
17. Salvage Value (No. 15 x No. 16) _____
Total (No. 14) _____
Total (No. 17) _____

RUS Form 254c

Tabulation of Net Amount of Materials Furnished by Owner

18. Item Designation _____
19. Description of Material _____
20. Quantity _____

Actual Cost to Owner

21. Unit Cost _____
22. Extended Cost (No. 20 x No. 21) _____

Amount Chargeable to Contractor at Contract Price

23. Unit Cost _____
24. Extended Cost (No. 20 x No. 23) _____
25. Excess of No. 24 over No. 22 _____
Total (No. 22) _____
Total (No. 24) _____
Total (No. 25) _____

[End of clause]

§ 1726.329 Contract to construction buildings, RUS Form 257.

The contract form in this section shall be used when required by this part.

CONTRACT TO CONSTRUCT BUILDINGS

Notice and Instructions to Bidders

1. Proposals: Sealed proposals for the construction, including the furnishing of all materials, machinery, labor and equipment, water, heat, utilities, transportation, and other means necessary for construction of the building(s) listed below (hereinafter called the ''Project'') to be financed _____ not to be financed _____ pursuant to a loan contract between _____ (hereinafter called the ''Owner'') and the United States of America, by the Administrator of the Rural Utilities Service (hereinafter called the ''Administrator'') and designated as Project _____ will be received by the Owner on or before _____ o'clock ___ M _____ Time, _____, 19___, at its office located at _____ at which time and place the proposals will be publicly opened and read. The Rural Telephone Bank may also be a party to the loan contract.

Name or Kind of Building _____
Location _____

2. Obtaining Documents: The Plans and Specifications together with all other necessary forms and documents for bidders may be secured from _____ at _____ upon payment of _____ Dollars ($_____) which payment will be refunded to each bona fide bidder within ten (10) days after the bid opening. Additional sets of Plans and Specifications may be obtained upon payment of _____ Dollars ($_____) which payment will not be subject to refund. The Plans and Specifications may be examined at the office of _____. A copy of the loan contract may also be examined at the office of the Owner.

3. Manner of Submitting Proposals: Proposals and all supporting documents required to be attached thereto must be submitted on the forms furnished by the Owner and must be delivered in a sealed envelope, addressed to the Owner. The name and address of the Bidder, its license number, if a license is required by the State, and the date and hour of the opening of bids must appear on the envelope in which the proposal is submitted. Proposals must be filled in in ink or typewritten. No alterations or interlineations will be permitted, unless made before submission, and initialed and dated.

4. Familiarity with Conditions: Prior to the submission of the Proposal, the Bidder shall make and shall be deemed to have made a careful examination of the site of the Project and of the Plans and Specifications, forms of Construction Proposal and Acceptance, and Contractor's Bond on file with Secretary of the Owner and shall become informed as to the location and nature of the proposed construction, the transportation facilities, the kind and character of the soil and terrain to be encountered, the kind of facilities required before and during the construction of the Project, general local conditions, and all other matters that may affect the cost and the time of completion of the Project. Bidders will be required to comply with all applicable statutes, regulations,

etc., including those pertaining to the licensing of contractors and the so called ''Kick-Back'' Statute (48 Stat. 948) and regulations issued pursuant thereto.

5. Proposals will be accepted only from those prequalified bidders invited by the Owner to submit a proposal.

6. Time of Completion of Construction: The time of completion of construction of the Project shall be as specified by the Architect in the Proposal.

7. Bid Bond: Each proposal must be accompanied by a bid bond in the form attached or a certified check on a bank that is a member of the Federal Deposit Insurance Corporation, payable to the order of the Owner, in an amount equal to ten percent (10%) of the maximum bid price. Each Bidder shall agree, provided its proposal is one of the three low proposals, that by filing its proposal together with such bid bond or check in consideration of the Owner's receiving and considering such proposal, said proposal shall be firm and binding upon each such Bidder and such bid bond or check shall be held by the Owner until a Proposal is accepted and a satisfactory Contractor's Bond (or Builder's Risk Policy) is furnished by the successful Bidder and such acceptance has been approved by the Administrator, or for a period not to exceed sixty (60) days from the date hereinbefore set for the opening of proposals, whichever period shall be the shorter. If such proposal is not one of the three low proposals, the bid bond or check will be returned in each instance within a period of ten (10) days to the respective Bidder.

8. Contractor's Bond or Builder's Risk Policy: The successful Bidder will be required to execute two additional counterparts of the Proposal and to furnish.

(a) For contracts in amounts in excess of $100,000, a Contractor's Bond in the form attached to the Proposal with sureties listed by the United States Treasury Department as Acceptable Sureties, in a penal sum not less than the contract price.

(b) For contracts in amounts of $100,000 or less, either a Contractor's Bond or a Builder's Risk Policy, whichever the Owner has specified below: (Check One)

_____ Contractor's Bond
_____ Builder's Risk Policy

9. Failure to Furnish Contractor's Bond or Builders Risk Policy: Should the successful Bidder fail or refuse to furnish a Contractor's Bond (or Builder's Risk Policy) satisfactory to the Owner within fifteen (15) days after written notification of the acceptance of the Proposal by the Owner, the Bidder will be considered to have abandoned the Proposal. In such event, the Owner shall be entitled: (a) To enforce the Bid Bond in accordance with its terms, or (b) if a certified check has been delivered with the Proposal, to retain from the proceeds of the certified check the difference between the amount of the Proposal and such larger amounts for which the Owner may in good faith contract with another party to construct the Project. The term ''successful Bidder'' shall be deemed to include any Bidder whose proposal is accepted after another Bidder has previously refused or has failed to furnish a satisfactory Contractor's Bond (or Builder's Risk Policy).

10. Contract is Entire Agreement: The contract, effected by acceptance of the Proposal, shall be deemed to include the entire agreement between the parties thereto, and the Bidder shall not claim any modification thereof resulting from any representation or promise made at any time by any officer, agent or employee of the Owner or by any other person.

11. Minor Irregularities: The Owner reserves the right to waive minor irregularities or minor errors in the Proposal, if it appears to the Owner that such irregularities or errors were made through inadvertence.

Any such irregularities or errors so waived must be corrected on the Proposal prior to its acceptance by the Owner.

12. Rejection of Proposals: The Owner reserves the right to reject any or all proposals.

13. Discrepancies: Where a discrepancy appears between the sum of the Base Bids of each building and the Total Base Bid, the correct addition of the Base Bid price for each building shall control.

14. The Owner Represents:

(a) If by provisions of the Proposal, the Owner shall have undertaken to furnish any materials for the construction of the Project, such materials are on hand at locations which may be determined by the bidders' inquiry of the Architect, or if such materials are not on hand, they will be made available by the Owner to the successful Bidder before the time such materials are required for incorporation into the Project.

(b) Title to the property on which the Project is to be constructed has been obtained.

(c) All funds necessary for prompt payment of the construction of the Project will be available. If the owner should fail to comply with any of the undertakings contained in the foregoing representations or if any such representations shall be incorrect, the Bidder will be entitled to an extension of the time of completion of Construction for a period equal to the delay, if any, caused by the failure of the Owner to comply with such undertakings or by any such incorrect representations; provided the Bidder shall have promptly notified the Owner in writing of its desire to extend the time of completion in accordance with the foregoing, and provided further that such extension, if any, of the time of completion shall be the sole remedy

of the Bidder for the Owner's failure to comply with any of the foregoing representations.

_____ Owner
By _____
Dated _____

Proposal

To: _____ (hereinafter called the ''Owner''). The undesigned (hereinafter called the ''Bidder'') proposes to construct the buildings(s) listed in Section 1 of Article I (hereinafter called the ''Project''), financed _____, not to be financed _____, in whole or in part by a loan to the Owner by the United States of America, by the Administrator of the Rural Utilities Service (hereinafter called the ''Administrator''), or by loans to the Owner by the United States of America and by the Rural Telephone Bank, designated _____ and to receive and install such materials and equipment as may hereinafter be specified to be furnished by the Owner, and to furnish all other materials, machinery, and equipment, water, heat, utilities, transportation and other means required to construct the Project in accordance with the plans and specifications (hereinafter called the ''Plans and Specifications''), prepared by _____ (hereinafter called the ''Architect'') and dated _____, 19___, and approved by the Rural Utilities Service on _____, 19___, and by this reference made a part hereof. The Bidder has made a careful examination of the site(s) on which the Project to be constructed, has become informed as to the kind of facilities required before and during the construction of the Project and has become acquainted with the labor conditions which would affect the work.

The Bidder agrees that if his bid is accepted, the following terms shall govern.

Article I—Amount of Proposal

Section 1. Bid Price: The Bidder will construct the Project for the following sum:

Name or Kind and Location of Building _____

Base Bid _____
Total of Bid $_____
Alternate Bid No. 1 (add) (deduct) $_____
Alternate Bid No. 2 (add) (deduct) $_____
Alternate Bid No. 3 (add) (deduct) $_____
Alternate Bid No. 4 (add) (deduct) $_____

Section 2. Taxes: The price quoted herein includes all amounts which the Bidder estimates will be payable by the Bidder or the Owner on account of taxes imposed by any taxing authority upon the sale, purchase or use of materials, supplies or equipment or services or labor of installation to be incorporated in the Project.

The Bidder will pay all such taxes and will furnish to appropriate taxing authorities any required information and reports pertaining thereto.

Article II—Construction

Section 1. Time of Construction:

(a) The Bidder, after notification in writing of approval of the Construction Contract by the Administrator, if approval of the Administrator is required, will commence construction of the Project within _____ (_____) calendar days after the Owner shall have given the Bidder written notice to commence construction which notice shall be given:

(1) Not later than _____ (_____) calendar days after approval of the Construction Contract by the Administrator, if approval of the Administrator is required.

(2) On a date to be determined by the Owner.

(The Architect will cross out the inapplicable statement (1) or (2) above before requesting bids.)

(b) The Bidder will prosecute diligently and complete construction of the Project in strict accordance with the Plans and Specifications and directions of the Architect within _____ (_____) calendar days after the expiration of the time specified to commence construction.

(c) The time for Completion of Construction herein set forth shall be extended for the period of any reasonable delay which is due exclusively to causes beyond the control and without the fault of the Bidder, including acts of God, fires, floods, direction by the Architect to cease construction during periods when in the judgment of the Architect it is impractical to perform any operation of construction and acts or omissions of the Owner with respect to matters for which the Owner is solely responsible, provided, however, that no such extension of time for completion shall be granted the Bidder unless within ten (10) days after the happening of any event relied upon by the Bidder for such an extension of time the Bidder shall have made a request therefor in writing to the Owner and provided further that no delay in such time of completion or in the progress of the work which results from any of the above causes or from any changes in construction which may be made pursuant to Subsection (d) of this Section shall result in any liability on the part of the Owner.

(d) The Owner, acting through the Architect and with the approval of the Administrator, if approval of the Administrator is required, may from time to time during the progress of construction make revisions in the Project. If the revision is such as to require on extension in the time of construction, a reasonable extension shall be granted if the Bidder shall make a written request therefor to the Owner prior to the commencement of work in connection with such

revision. If the cost of the Project to the Bidder to make revision shall be increased or decreased, the contract price shall be amended by an amount equivalent to the reasonable cost thereof by a Construction Contract Amendment signed by the Owner and the Bidder, and approved by the Administrator, if approval of the Administrator is required; but no claim for additional compensation for any revision will be considered unless the Bidder shall have made a written request therefore to the Owner prior to the commencement of work in connection with such revision. The reasonable cost of any increase or decrease in the contract amendment as outline above, in the absence of any other mutual agreement, shall be computed on the basis of the direct cost of materials, F.O.B. the site of the Project, plus the direct cost of labor necessary to incorporate such materials into the Project (including actual cost of payroll taxes and insurance) plus twenty-five percent (25%) of the direct cost of materials and labor. Labor cost shall be limited to the direct costs for workmen and foremen. Costs for Bidder's main office overhead, job office overhead and superintendence shall not be included.

Section 2. Supervision: The Bidder will give sufficient supervision to the work, using his best skill and attention. He will carefully study and compare all drawings, specifications and other instructions, and report at once to the architect any error, inconsistency or omission which he may discover. The Bidder will make available during construction a competent superintendent and any necessary assistants, all satisfactory to the architect. The superintendent shall not be changed except with the consent of the Architect unless the superintendent proves to be unsatisfactory to the Bidder and ceases to be his employ. The superintendent shall represent the Bidder in his absence and all directions given to him shall be as binding as if given to the Bidder. When requested, such directions shall be confirmed in writing.

Section 3. Shop Drawings: The Bidder, after reviewing, will submit to the Architect, with such promptness as to cause no delay in the work two copies of all shop or setting drawings and schedules required for the work of the various trades, and the Architect shall pass on them with reasonable promptness, requesting corrections required thereto to be made. The Bidder will make any corrections required and file with the Architect three corrected copies and furnish such other copies as may be needed. The Architect's approval of such drawings or schedules shall not relieve the Bidder of responsibility for deviations from the Plans and Specifications. The Bidder will keep one copy of the contract documents on the site, in good order, available to the Architect. All drawings and specifications will be returned to the Architect upon completion of construction.

Section 4. Samples: The Bidder will furnish for approval, all samples as directed by the Architect, and will perform the work in accordance with such approved samples.

Section 5. Inspection and Tests: The manner of construction of the Project and all materials and equipment used or to be used therein shall be subject to the inspection, tests and approval of the Architect and the Administrator, and the Bidder will furnish all information required by the Architect or the Administrator concerning the nature or source of materials. The Owner and the Administrator shall have the right to inspect all records of the Bidder and of any subcontractor relevant to the work. The Bidder will make available at the site of the Project, telephone service where obtainable, the payroll, invoices of material and other data and records of the Bidder relevant to the work. The Bidder will provide all reasonable facilities necessary for such inspection and tests. If the specifications, the Architect's instructions, laws, ordinances or any public authorities require any work to be specially tested or approved, the Bidder will give the Architect timely notice of its readiness for observation by the Architect or inspection by an authority other than the Architect, and if the inspection is by such other authority, of the date fixed for such inspection, testing or approval. The Bidder will bear all costs of such inspections, tests and approvals unless otherwise provided, obtain required certificates and deliver them to the Architect. Observations by the Architect shall be promptly made, and where practicable at the source of supply. If any work should be covered without approval or consent of the Architect, it must, if required by the Architect, be uncovered for examination at the Bidder's expense.

Re-examination of questioned work may be ordered by the Architect and if so ordered the work must be uncovered by the Bidder. If such work be found in accordance with the contract documents the Owner shall pay the cost of re-examination and replacement. If such work be found not in accordance with the contract documents the Bidder will pay such cost.

Section 6. Employees: The Bidder will at all times enforce strict discipline and good order among his employees and shall not employ any unfit person or anyone not skilled in the task assigned him. The Architect and the Owner shall have the right to require the removal from the Project of any employee of the Bidder or subcontractor if in their judgment such removal shall be necessary to protect the interest of the Owner.

Section 7. Defective Workmanship and Materials: Notwithstanding the acceptance of workmanship, materials (except owner-furnished materials) or equipment or the giving

of any certificate with respect to the Completion of Construction, if during the construction or within one year after such completion, or within such longer period as the Project or any part thereof may be guaranteed by other provisions of this Proposal, the workmanship, materials or equipment shall be found to be defective or not in conformity with the requirements of the Plans and Specifications, the Bidder will remedy or replace such workmanship, materials or equipment within thirty (30) days after written notice of the failure of the Bidder to conform with the applicable provisions of the contract documents shall have been given to the Bidder by the Owner.

Article III—Payment and Releases of Liens

Section 1. Payments to Bidder:

(a) On or before the fifth (5) day of each Calendar Month, the Bidder will make application for payment, and the Owner, on or before the fifteenth (15) day of such month, shall make partial payment to the Bidder for construction accomplished during the preceding Calendar Month and partial payment for materials not incorporated in the Project. The payment shall be made on the basis of a schedule of values and receipts or other vouchers, submitted by the Bidder to, and approved by, the Architect, showing payments for labor and materials, payments to subcontractors, and such other evidence of the Bidder's right to payment for construction accomplished, and bills of sale or such other procedure as will establish the Owner's title to materials not incorporated in the Project but delivered and suitably stored on the site or at any other location agreed upon in writing by the Owner. Approval by the Architect of the application for payment is solely for the purposes of payment and shall not be deemed approval of the workmanship or materials. Only ninety percent (90%) of each such estimate of the cost for construction accomplished and approved and fifty percent (50%) of the cost of materials not incorporated in the Project shall be paid by the Owner to the Bidder prior to Completion of Construction.

The Bidder will, before the first application, submit to the Architect, a schedule of values of the various parts of the work, including quantities, aggregating the total contract price, divided so as to assist in determining the accuracy of payments to subcontractors and of the applications for payment.

(b) Upon Completion of Construction, the Architect shall inspect the Project, and if he shall find the work acceptable and all provisions hereunder fully performed, he shall furnish the Owner two copies of a Certificate of Completion, on forms satisfactory to the Administrator, and shall certify thereon the final Contract Price. The Certificate of Completion shall show thereon the Acceptance of the Contractor. Upon acceptance of the Certificate of Completion by the Owner, the Owner shall make final payment to the Bidder of all unpaid amounts to which the Bidder shall be entitled hereunder, except that, for contracts requiring approval of the Administrator, the Owner shall submit one copy of the Certificate of Completion to the Administrator for approval. Upon notice of approval by the Administrator, the Owner shall make final payment to the Bidder.

(c) Interest at the rate of ___ percent[1] (___%) per annum shall be paid by the Owner to the Bidder on all unpaid balances due on monthly estimates, commencing fifteen (15) days after the due date, provided the delay in payment beyond the due date is not caused by any condition within control of the Bidder. The due date for purposes of such monthly payment shall be the fifteenth (15th) day of each Calendar Month provided (1) The Bidder on or before the fifth (5th) day of such month shall have submitted its certified estimate of construction completed during the preceding month and (2) the Architect on or before the fifteenth (15th) day of such month shall have approved such certification. If, for reasons not due to the Bidder's fault, such approval of the Architect shall not have been given on or before the fifteenth (15th) day of such month, the due date for purposes of this Subsection shall be the fifteenth (15th) day of such month notwithstanding the absence of the Architect's approval of the certification.

(d) Interest at the rate of ___ percent[2] (___%) shall be paid by the Owner to the Bidder on the final payment commencing fifteen (15) days after the due date. The due date for the purposes of such final payment shall be sixty (60) days after the date of certification by the Architect in the Certificate of Completion or the date of approval by the Administrator of the Certificate of Completion when approval thereof is required by the Administrator.

(e) No payments shall be due while the Bidder is in default in respect of any of the provisions of this Proposal, and the Owner may withhold from the Bidder the amount of any claim by a third party against either the Bidder or the Owner based upon an alleged failure of the Bidder to perform the work hereunder in accordance with the provisions of this Proposal.

Section 2. Release of Liens: Upon Completion of Construction of the Project, but prior to the payment to the Bidder of any amount withheld in accordance with Section 1, (a) of Article III, the Bidder shall furnish the

[1] The Owner shall insert a rate equal to the lowest ''Prime Rate'' listed in the ''Money Rates'' section of the Wall Street Journal on the date such invitation to bid is issued.

[2] See footnote 1.

Owner, on forms satisfactory to the Administrator releases of all liens, and of all rights to claim any lien from manufacturers, materialmen and subcontractors who have furnished materials or services for the construction of the Project, and a Certificate of Contractor on a form satisfactory to the Administrator, to the effect that all labor used on or for the Project has been paid and that all such releases have been submitted to the Owner.

Article IV—Particular Undertakings of the Bidder

Section 1. Protection to Persons and Property: The Bidder will, at all times, take all reasonable precautions for the safety of employees on the Project, and of the public and all other persons who may be affected thereby, and will comply with all applicable provisions of Federal, State and Municipal safety laws and building and construction codes.

The Bidder will protect from loss or damage all materials and equipment to be incorporated in the Project, whether in storage on or off the site, and other property at the site or adjacent thereto, including trees, shrubs, lawns, walks, paved surfaces, structures and utilities not designated for removal, relocation or replacement in the course of construction. The Bidder will provide and maintain guard lights, watchman or other protection for persons and property, and physical hazards shall be guarded in accordance with the ''Manual of Accident Prevention in Construction'' of the Associated General Contractors of America, unless such instructions are incompatible with or less strict than those of any public authority having jurisdiction thereon, or instructions of the Architect.

The following provisions shall not limit the generality of the above requirements:

(a) The Bidder will at all times, keep the premises free from accumulation of waste material or rubbish caused by his employees or work, and at the completion of construction he will remove all rubbish from and about the Project, and all his tools, scaffolding and surplus materials and will leave his work ''broom clean.''

(b) The Project from its commencement to completion, or to such earlier date or dates when the Owner may take possession and control in whole or in part as hereinafter provided, will be under the charge and control of the Bidder and during such period of control by the Bidder all risks in connection therewith and the materials to be used therein will be borne by the Bidder. The Bidder will make good and fully repair all injuries and damages to the Project or any portion thereof under the control of the Bidder, by reason of any act of God or other casualty or cause, whether or not the same shall have occurred by reason of the Bidder's negligence.

(i) To the maximum extent permitted by law, Bidder shall defend, indemnify, and hold harmless Owner and Owner's directors, officers, and employees from all claims, causes of action, losses, liabilities, and expenses (including reasonable attorney's fees) for personal loss, injury, or death to persons (including but not limited to Bidder's employees) and loss, damage to or destruction of Owner's property or the property of any other person or entity (including but not limited to Bidder's property) in any manner arising out of or connected with the Contract, or the materials or equipment supplied or services performed by Bidder, its subcontractors and suppliers of any tier. But nothing herein shall be construed as making Bidder liable for any injury, death, loss, damage, or destruction caused by the sole negligence of Owner.

(ii) To the maximum extent permitted by law, Bidder shall defend, indemnify, and hold harmless Owner and Owner's directors, officers, and employees from all liens and claims filed or asserted against Owner, its directors, officers, and employees, or Owner's property or facilities, for services performed or materials or equipment furnished by Bidder, its subcontractors and suppliers of any tier, and from all losses, demands, and causes of action arising out of any such lien or claim. Bidder shall promptly discharge or remove any such lien or claim by bonding, payment, or otherwise and shall notify Owner promptly when it has done so. If Bidder does not cause such lien or claim to be discharged or released by payment, bonding, or otherwise, Owner shall have the right (but shall not be obligated) to pay all sums necessary to obtain any such discharge or release and to deduct all amounts so paid from the amount due Bidder.

(iii) Bidder shall provide to Owner's satisfaction evidence of Bidder's ability to comply with the indemnification provisions of subparagraphs i and ii above, which evidence may include but may not be limited to a bond or liability insurance policy obtained for this purpose through a licensed surety or insurance company.

(c) The Bidder will confine his apparatus, the storage of materials and the operations of his workmen to limits indicated by law, ordinances, permits, or directions of the Architect, and shall not unreasonably encumber the premises with his materials.

(d) The Bidder will not load or permit any of the structure to be loaded with a weight that will endanger its safety.

(e) The Bidder will submit to the Owner, monthly reports in duplicate of all accidents giving such data as may be prescribed by the Architect.

(f) Upon violation by the Bidder of any of the provisions of this section, the Bidder will, after written notice of such violation given to the Bidder by the Architect or the

Owner, immediately correct such violation. Upon failure of the Bidder so to do, the Owner may correct such violation at the Bidder's expense; provided, however, that the Owner may, if it deems necessary or advisable, correct such violation at the Bidder's expense without such prior notices to the Bidder.

(g) The Bidder will be responsible for all construction means, methods, techniques, sequences, and procedures and for coordinating all portions of the construction of the Project.

Section 2. Insurance. The Bidder shall take out and maintain throughout the contract period insurance of the following types and minimum amounts:

(a) Workers' compensation and employers' liability insurance, as required by law, covering all their employees who perform any of the obligations of the contractor, engineer, and architect under the contract. If any employer or employee is not subject to the workers' compensation laws of the governing state, then insurance shall be obtained voluntarily to extend to the employer and employee coverage to the same extent as though the employer or employee were subject to the workers' compensation laws.

(b) Public liability insurance covering all operations under the contract shall have limits for bodily injury or death of not less than $1 million each occurrence, limits for property damage of not less than $1 million each occurrence, and $1 million aggregate for accidents during the policy period. A single limit of $1 million of bodily injury and property damage is acceptable. This required insurance may be in a policy or policies of insurance, primary and excess including the umbrella or catastrophe form.

(c) Automobile liability insurance on all motor vehicles used in connection with the contract, whether owned, nonowned, or hired, shall have limits for bodily injury or death of not less than $1 million per person and $1 million per occurrence, and property damage limits of $1 million for each occurrence. This required insurance may be in a policy or policies of insurance, primary and excess including the umbrella or catastrophe form.

The Owner shall have the right at any time to require public liability insurance and property damage liability insurance greater than those required in subsection ''b'' and ''c'' of this Section. In any such event, the additional premium or premiums payable solely as the result of such additional insurance shall be added to the Contract price.

The Owner shall be named as Additional Insured on all policies of insurance required in subsections ''b'' and ''c'' of this Section.

The policies of insurance shall be in such form and issued by such insurer as shall be satisfactory to the Owner. The Bidder shall furnish the Owner a certificate evidencing compliance with the foregoing requirements which shall provide not less than (30) days prior written notice to the Owner of any cancellation or material change in the insurance.

Section 3. Purchase of Materials: The Bidder will purchase all materials (except owner-furnished materials) and supplies outright and not subject to any conditional sales agreements, bailment lease or other agreement reserving unto the seller any right, title or interest therein. All materials and supplies shall become the property of the Owner when erected in place or at such earlier time as the parties may agree pursuant to Section 1(a) of Article III. Unless otherwise specified, all materials shall be new.

Section 4. Assignment of Guarantees: The Bidder will obtain from manufacturers, materialmen, and subcontractors and furnish to the Owner all guarantees and will transfer or assign to the Owner such guarantees as run in favor of the Bidder, prior to the time the Bidder receives final payment. The guarantees shall be in addition to and not limited by any other provisions of the contract documents, guarantee or remedy required by law.

Section 5. Royalties and Patent Infringement: The Bidder will pay all royalties and license fees, and will hold harmless and indemnify the Owner from any and all claims, suits, and proceedings for the infringement of any patent or patents covering any equipment, materials, supplies or construction methods used in the work.

Section 6. Compliance with Statues and Regulations: The Bidder will comply with all applicable statues, ordinances, rules and regulations pertaining to the work. The Bidder acknowledges that it is familiar with The Rural Electrification Act of 1936, as amended, the so-called ''Kick-Back'' Statute (48 Stat. 948), and all regulations issued pursuant thereto, and 18 U.S.C. §§287, 1001 as amended. The Bidder understands that the obligations of the parties hereunder are subject to the applicable regulations and orders of Governmental agencies having jurisdiction in the premises.

Section 7. Delivery of Possession and Control to Owner: Upon written request of the Owner, the Bidder shall deliver to the Owner full possession and control of any portion of the Project provided the Bidder shall have been paid at least 90 percent (90%) of the cost of construction of such portion. Upon such delivery of the possession and control of such portion of the Project to the Owner, the risks and obligations of the Bidder as set forth in Section 1(b), Article IV hereof with respect to such portion so delivered to the Owner shall be terminated; provided, however, that nothing herein contained shall relieve the Bidder of any liability with respect to defective workmanship or materials as provided in Section 7, Article II.

Section 8. Occupancy Before Completion: Exception as provided in Section 7, the Owner shall not occupy any portion of the Project prior to the time of completion without the written approval of the Bidder. It is agreed that such occupancy of any such portion of the Project will not constitute acceptance of workmanship or materials used in construction of the Project as provided in Section 7, Article II, and that such occupancy will not relieve the Bidder from his obligation to complete any part of the Project in compliance with the contract. The Owner agrees to permit the Bidder to fulfill the requirements of the contract in accordance with instructions issued to the Bidder by the Architect upon occupancy by the Owner.

Article V—Remedies

Section 1. Liquidated Damages: The time of Completion of Construction of the Project is of the essence of this Contract. Should the Bidder neglect, refuse or fail to complete construction within the time herein agreed upon, after giving effect to extensions of time, if any herein provided for, then, in that event and in view of the difficulty of estimating with exactness damages caused by such delay, the Owner shall have the right to deduct from and retain out of such moneys which may be then due or which may become due and payable to the Bidder, the sum of _____ Dollars ($_____) per day of each and every day that such construction is delayed in its completion beyond the specified time, as liquidated damages and not as a penalty. If the amount due and to become due from the Owner to the Bidder is insufficient to pay in full any such liquidated damages, the Bidder shall pay to the Owner the amount necessary to effect such payment in full; provided, however, that the Owner shall promptly notify the Bidder in writing of the manner in which the amount retained, deduced or claimed as liquidated damages was computed.

Section 2. Completion on Bidder's Default: If default shall be made by the Bidder or by any subcontractor in the performance of any of the terms of this Proposal, the Owner, without in any manner limiting its legal and equitable remedies in the circumstances, may serve upon the Bidder and the surety or sureties upon the Contractor's Bond or Bonds a written notice requiring the Bidder to cause such default to be corrected forthwith. Unless within twenty (20) days after the service of such notice upon the Bidder, such default shall be corrected or arrangements for the correction thereof, satisfactory to both the Owner and the Administrator, shall be made by the Bidder or its Surety or Sureties, the Owner may take over the construction of the Project and prosecute the same to completion by contract or otherwise for the account and at the expense of the Bidder and the Bidder and its Surety or Sureties shall be liable to the Owner for any cost or expense in excess of the contract price occasioned thereby. Sureties shall be liable to the Owner for any cost or expense in excess of the contract price occasioned thereby. In such event the Owner may take possession of and utilize, in completing the construction of the Project, any materials, tools, supplies, equipment, appliances, and plant belonging to the Bidder or any of its subcontractors, which may be situated at the site of the Project. The Owner in such contingency may exercise any rights, claims or demands which the Bidder may have against third persons in connection with this Proposal and for such purpose the Bidder does hereby assign, transfer and set over unto the Owner all such rights, claims and demands.

Section 3. Cumulative Remedies: Every right or remedy herein conferred upon or reserved to the Owner or the Government or the Administrator shall be cumulative, shall be in addition to every right and remedy now or hereafter existing at law or in equity or by statute and the pursuit of any right or remedy shall not be construed as an election; provided, however, that the provisions of Section 1 of this Article V shall be the exclusive measure of damages for failure by the Bidder to complete the construction of the Project within the time herein agreed upon.

Article VI—Miscellaneous

Section 1. Definitions: (a) The term ''Administrator'' shall mean the Administrator of the Rural Utilities Service of the United States of America and his duly authorized representatives or any other person in whom or authority in which may be vested in the duties and functions which the Administrator is now authorized by law to perform.

(b) The term ''Architect'' shall mean the person or organization employed by the Owner to provide architectural services for the Project, and the Architect's duly authorized assistants and representatives. If an Architect is not employed, the term shall apply to the duly authorized agent of the Owner.

(c) The term ''Completion of Construction'' shall mean full performance by the Bidder of the Bidder's obligations under the Contract and all amendments and revisions thereof except the Bidder's obligations in respect of (1) Releases of Liens and Certificate of Contractor under Article III, Section 2 hereof, and (2) other final documents. The term ''Completion of the Project'' shall mean full performance by the Bidder of the Bidder's obligations under the Contract and all amendments and revisions thereof. The date of signature by the Architect of the Certificate of Completion shall be the sole and conclusive

evidence as to the date of Completion of Construction and as to the fact of Completion of the Project.

Section 2. Materials and Supplies. In the performance of this contract there shall be furnished only such unmanufactured articles, materials, and supplies as have been mined or produced in the United States, Mexico, or Canada, and only such manufactured articles, materials, and supplies as have been manufactured in the United States substantially all from articles, materials, or supplies mined, produced or manufactured, as the case may be, in the United States, Mexico, or Canada; provided that other articles, materials, or supplies may be used in the event and to the extent that the Administrator shall expressly in writing authorize such use pursuant to the provisions of the Rural Electrification Act of 1938, being Title IV of Public Resolution No. 122, 75th Congress, approved June 21, 1938. The Bidder agrees to submit to the Purchaser such certificates with respect to compliance with the foregoing provision as the Administrator from time to time may require.

Section 3. Bond or Builder's Risk Policy: (a) The Bidder will furnish to the Owner, for a contract in an amount in excess of $100,000, a bond in a penal sum not less than the Total Contract Price and in the form attached hereto and with a Surety or Sureties listed by the United States Treasury Department as Acceptable Sureties.

(b) The Bidder will furnish to the Owner for a contract in an amount of $100,000 or less, a Builder's Risk Policy or a bond like that required in the preceding paragraph, whichever the Owner has specified under Paragraph 8 of the Notice and Instructions to Bidders. The Builder's Risk Policy shall be on a completed value form, effective from the date equipment or materials is first delivered to the building site, and shall name both the Owner and the Contractor as insureds. The policy shall insure against loss by fire or lightning and the named perils in the extended coverage endorsement. The amount of coverage shall not be less than the replacement value of the property constructed, including all materials to be used in the construction and stored at the site or at any other location whether furnished by the Owner or the Contractor. When directed, the Bidder shall furnish evidence of compliance with these requirements. The evidence shall be in the form of a certificate of insurance by the insurance company and shall include a provision that no change in or cancellation of the policy shall be made without prior written notice to the Owner and the Administrator.

Section 4. Subcontracts and Nonassignment: (a) Within ten (10) days after acceptance of the Proposal by the Owner and before awarding any subcontracts, the Bidder will notify the Architect, Owner and Surety in writing, of the names of the subcontractors proposed for the principal parts of the work, and will not enter into any subcontract for such work if written objection thereto is received from the Architect, Owner, Surety or Sureties within fifteen (15) days after receipt of such notice. The Bidder will be as fully responsible to the Owner and the Administrator for the acts and omissions of each subcontractor and of persons employed by such subcontractor as the Bidder would be for its own acts and omissions and those of persons directly employed by it. The Bidder will not subcontract on aggregate amount in excess of sixty-five percent (65%) of its obligations, (to be calculated on the basis of the Total Contract Price) without approval of the Architect, Owner, and Surety or Sureties on any bond furnished by the Bidder for the faithful performance of the Bidder's obligations hereunder. Nothing contained in the Construction Contract shall create any contractual relation between any subcontractor and the Owner.

(b) The Bidder will not assign the contract effected by the acceptance of this Proposal or any part thereof without approval in writing of the Owner, Surety or Sureties, and the Administrator if the Construction Contract was approved by the Administrator.

Section 5. Equal Opportunity Provisions: (a) Bidder's Representations.

The Bidder represents that:

It has ____, does not have____, 100 or more employees, and if it has, that it has ____, has not____, furnished the Equal Employment Opportunity-Employers Information Report EEO–1, Standard Form 100, required of employers with 100 or more employees pursuant to Executive Order 11246 and Title VII of the Civil Rights Act of 1964.

The Bidder agrees that it will obtain, prior to the award of any subcontract for more than $10,000 hereunder to a subcontractor with 100 or more employees, a statement, signed by the proposed subcontractor, that the proposed subcontractor has filed a current report on Standard Form 100.

The Bidder agrees that if it has 100 or more employees and has not submitted a report on Standard Form 100 for the current reporting year and that if this Contract will amount to more than $10,000, the Bidder will file such report, as required by law, and notify the Owner in writing of such filing prior to the Owner's acceptance of this Proposal.

(b) Equal Opportunity Clause, During the performance of this Contract, the Bidder agrees as follows: (1) The Bidder will not discriminate against any employee or applicant for employment because of race, color, religion, sex or national origin. The Bidder will take affirmative action to ensure that applicants are employed, and that employees are treated during employment without regard to their race, color, religion, sex or national origin. Such actions shall include, but not be

limited to, the following: Employment, upgrading, demotions or transfer; recruitment or recruitment advertising, layoff or termination; rates of pay or other forms of compensation; and selection of training, including apprenticeship. The Bidder agrees to post in conspicuous places, available to employees and applicants for employment, notices to be provided setting forth the provisions of this Equal Opportunity Clause.

(2) The Bidder will, in all solicitations or advertisements for employees placed by or on behalf of the Bidder, state that all qualified applicants will receive consideration for employment without regard to race, color, religion, sex or national origin.

(3) The Bidder will send to each labor union or representative of workers, with which it has a collective bargaining agreement or other contract or understanding, a notice to be provided advising the said labor union or worker's representative of the Bidder's commitments under this section, and shall post copies of the notice in conspicuous places available to employees and applicants for employment.

(4) The Bidder will comply with all provisions of Executive Order 11246 of September 24, 1965, and rules, regulations, and relevant orders of the Secretary of Labor.

(5) The Bidder will furnish all information and reports required by Executive Order 11246 of September 24, 1965, and by rules, regulations, and orders of the Secretary of Labor, or pursuant thereto, and will permit access to its books, records and accounts by the administering agency and the Secretary of Labor for purposes of investigation to ascertain compliance with such rules, regulations, and orders.

(6) In the event of the Bidder's noncompliance with the Equal Opportunity Clause of this Contract or with any of the said rules, regulations, or orders, this Contract may be cancelled, terminated, or suspended in whole or in part, and the Bidder may be declared ineligible for further Government contracts or federally assisted construction contracts in accordance with procedures authorized in Executive Order 11246 of September 24, 1965, and such other sanctions may be imposed and remedies invoked as provided in Executive Order 11246 of September 24, 1965, or by rule, regulations, or order of the Secretary of Labor, or as provided by law.

(7) The Bidder will include this Equal Opportunity Clause in every subcontract or purchase order unless exempted by the rules, regulations, or order of the Secretary of Labor issued pursuant to Section 204 of Executive Order 11246 of September 24, 1965, so that such provisions will be binding upon each subcontract or vendor. The Bidder will take such action with respect to any subcontract or purchase order as the administering agency may direct as a means of enforcing such provisions, including sanctions for noncompliance. Provided, however, that in the event Bidder becomes involved in, or is threatened with, litigation with a subcontractor or vendor as a result of such direction by the administering agency, the Bidder may request the United States to enter into such litigation to protect the interests of the United States.

(c) Certificate of Nonsegregated Facilities. The Bidder certifies that it does not maintain or provide for its employees any segregated facilities at any of its establishments, and that it does not permit its employees to perform their services at any location, under its control, where segregated facilities at any of its establishments, and that it will not permit its employees to perform their services at any location, under its control, where segregated facilities are maintained. The Bidder agrees that a breach of this certification is a violation of the Equal Opportunity Clause in this Contract. As used in this certification, the term ''segregated facilities'' means any waiting rooms, work areas, restrooms and washrooms, restaurants and other eating areas, timeclocks, locker rooms, and other storage or dressing areas, parking lots, drinking fountains, recreation or entertainment areas, transportation, and housing facilities provided for employees which are segregated by explicit directive or are in fact segregated on the basis of race, color, religion, or national origin, because of habit, local custom, or otherwise. The Bidder agrees that (except where it has obtained identical certifications from proposed subcontractors for specific time periods) it will obtain identical certifications from proposed subcontractors prior to the award of subcontracts exceeding $10,000 which are not exempt from the provisions of the Equal Opportunity Clause, and that it will retain such certifications in its files.

Section 6. License: The Bidder warrants that a Contractor's License is ___, is not ___, required, and if required, it possesses Contractor's License No. _____ for the State of _____ in which the Project is located, and said license expires on _____, 19___.

Section 7. Extension to Successors and Assigns: Each and all of the covenants and agreements contained in the contract effected by the Acceptance of this Proposal shall extend to and be binding upon the successors and assigns of the parties thereto.

Section 8. Description of Contract: The Notice and Instructions to Bidders, the Proposal, the Acceptance, the Contractor's Bond or Builder's Risk Policy, the Plans and Specifications and all amendments or revisions thereto constitute the Construction Contract.

Section 9. Contractor: Upon acceptance of this Proposal the successful Bidder shall be

the Contractor and all references in the Proposal to the Bidder shall apply to the Contractor.

Section 10. Approval by the Administrator: No acceptance of a Proposal for a contract upon which approval of the Administrator is required shall become effective until the contract has been approved by the Administrator; provided that no obligation shall arise hereunder unless such approval is given within sixty (60) days after the date set for the opening of the proposals. The acceptance of a Proposal for a contract upon which approval of the Administrator is not required shall become effective the date of acceptance by the Owner.

_____ Bidder
By _____ President
_____ Address
Attest: _____ Secretary
Date _____

The Proposal must be signed with the full name of the Bidder. If the Bidder is a partnership, the Proposal must be signed in partnership name by a partner. If the Bidder is a corporation, the Proposal must be signed in the corporate name by a duly authorized officer and the corporate seal affixed and attested by the Secretary of the Corporation.

Acceptance

Subject to the approval of the Administrator, if approval of the Administrator is required, the Owner hereby accepts the Proposal of _____ for the construction of the Project therein described for the:

Base Bid of _____ and alternate bids as follows (Show plus or minus):

Alternate bid No. _____, $_____.
Alternate bid No. _____, $_____.
Alternate bid No. _____, $_____.
Alternate bid No. _____, $_____.
Alternate bid No. _____, $_____.
Alternate bid No. _____, $_____.
Alternate bid No. _____, $_____.
The Total Contract Price is $_____
_____ Owner
By _____ President
Attest: _____ Secretary
Dated _____

[End of clause]

§ 1726.330 [Reserved]

§ 1726.331 Bid bond, RUS Form 307.

The bond form in this section shall be used when a Bid Bond is required by RUS Form 200, 203, 257, 764, 830, or 831.

BID BOND

1. KNOW ALL MEN that we, _____, as Principal, and _____, as Surety, are held and firmly bound unto _____ (hereafter called the ''Owner'') in the penal sum of ten percent (10%) of the amount of the bid referred to in paragraph 2 below, but not to exceed _____ dollars ($_____), as hereinafter set forth and for the payment of which sum well and truly to be made we bind ourselves, our executors, administrators, successors and assigns, jointly and severally, by these presents;

2. WHEREAS, the Principal has submitted a bid to the Owner for the construction of the Rural Utilities Service Project known as Project _____.

3. NOW, THEREFORE, the condition of this obligation is such that if the Owner shall accept the bid of the Principal, and

(a) The Principal shall execute such contract documents, if any, as may be required by the terms of the bid and give such Contractor's Bond or Bonds for the performance of the contract and for the prompt payment of labor and material furnished for the Project as may be specified in the bid, or

(b) In the event of the failure of the Principal to execute such contract documents, if any, and give such Contractor's Bond or Bonds, if the Principal shall pay to the Owner the difference, not to exceed the penal sum hereof, between the amount specified in the bid and such larger amount for which the Owner may in good faith contract with another party to construct the Project, then this obligation shall be void, otherwise to remain in full force and effect.

IN WITNESS WHEREOF, the undersigned have caused this instrument to be executed and their respective corporate seals to be affixed and attested by their duly authorized representatives this _____ day of_____, 19___

Principal _____ (Seal)
By _____
Title _____
Attest: _____ (Secretary)
Surety _____ (Seal)
By _____
Title _____
Attest: _____ (Secretary)

[End of clause]

§§ 1726.332—1726.339 [Reserved]

§ 1726.340 Substation and switching station erection contract, RUS Form 764.

The contract form in this section shall be used when required by this part.

SUBSTATION AND SWITCHING STATION ERECTION CONTRACT

Notice and Instructions to Bidders

1. Sealed proposals for the construction, including the supply of necessary labor, materials and equipment, of a rural electric

project of _____ (hereinafter called the ''Owner'') to be known as Project _____ will be received by the Owner on or before _____ o'clock ___ M., 19___, at its office at _____ at which time and place the proposals will be publicly opened and read. Any proposal received subsequent to the time specified will be promptly returned to the Bidder unopened.

2. Description of Project: The Project will consist of the following Substations and other Major Facilities:

Name _____ KVA ___ Voltage _____
Name _____ KVA ___ Voltage _____
Name _____ KVA ___ Voltage _____

The Project is located in _____ Counties, in the State of _____ all as more fully described in the Plans, Specifications for Construction, Construction Drawings and Contractor's Proposal therefore hereinafter referred to.

3. Owner Furnished Materials. The unit prices in the Contractor's Proposal should include provisions for Owner Furnished Materials since as stated in Article I, Section 3 of the Contractor's Proposal, the value of the Owner Furnished Materials, if any, will be deducted from payments to the Bidder for completed Construction Units.

4. Obtaining Documents. The Plans, Specifications for Construction and Construction Drawings together with all necessary forms and other documents for bidders may be obtained from the Owner, or from the Engineer _____ at the latter's office at _____ upon payment of $_____, which payment will not be subject to refund. The Plans, Specifications for Construction and Construction Drawings may be examined at the office of the Owner or at the office of the Engineer. A copy of the Loan Contract (if the Project is to be financed in whole or in part, pursuant to a Loan Contract) between the Owner and the United States of America acting through the Administrator of the Rural Utilities Service (hereinafter called the ''Administrator'') and of the loan contract between the Owner and any other lender may be examined at the office of the Owner. Each set of Plans, Specifications for Construction and Construction Drawings will have a serial number, given by the Engineer, and the number of each set with the name of the Purchaser will be recorded by the Engineer. Bids will be accepted only from the original purchasers.

5. Manner of Submitting Proposals. Proposals and all supporting instruments must be submitted on the forms furnished by the Owner and must be delivered in a sealed envelope addressed to the Owner. The name and address of the Bidder, its license number if a license is required by the State, and the date and hour of the opening of bids must appear on the envelope in which the Proposal is submitted, Proposals must be filled in in ink or typewritten. No alterations or interlineations will be permitted, unless made before submission, and initialed and dated.

6. Familiarity with Conditions. Prior to the submission of the Proposal the Bidder shall make and shall be deemed to have made a careful examination of the site of the Project and of the Plans, Specifications for Construction, Construction Drawings, and forms of Contractor's Proposal and Contractor's Bond on file with the Secretary of the Owner and with the Engineer, and shall become informed as to the location and nature of the proposed construction, the transportation facilities, the kind and character of soil and terrain to be encountered, the kind of facilities required before and during the construction of the Project, general local conditions and all other matters that may affect the cost and the time of completion of the Project. Bidders will be required to comply with all applicable statutes, regulations, etc., including those pertaining to the licensing of contractors, and the so-called ''Kickback Statute'' (48 Stat. 948) and regulations issued pursuant thereto.

7. Proposals will be accepted only from those prequalified bidders invited by the Owner to submit a proposal.

8. Alternate Designs. The Owner reserves the right to confine its consideration of the several bids to one type of design regardless of alternate types of design which may be specified in the Plans and Specifications for Construction and offered in the Proposals.

9. The time for Completion of Construction of the Project shall be as specified by the Engineer in the Proposal.

10. Bid Bond. Each Proposal must be accompanied by a Bid Bond in the form attached or a certified check on a bank that is a member of the Federal Deposit Insurance Corporation, payable to the order of the Owner, in an amount equal to ten percent (10%) of the maximum bid price. Each Bidder agrees, provided its Proposal is one of the three low Proposals, that, by filing its Proposal together with such Bid Bond or check in consideration of the Owner's receiving and considering such Proposal, said Proposal shall be firm and binding upon each such Bidder and such Bid Bond or check shall be held by the Owner until a Proposal is accepted and a satisfactory Contractor's Bond is furnished (where required) by the successful Bidder and such acceptance has been approved by the Administrator, or for a period not to exceed sixty (60) days from the date hereinbefore set for the opening of Proposals, whichever period shall be the shorter. If such Proposal is not one of the three low Proposals, the Bid Bond or check will be returned in each instance within a period of ten (10) days to the Bidder furnishing same.

11. Contractor's Bond. The successful Bidder will be required to execute two additional counterparts of the Proposal and, for

a Contract in excess of $100,000, to furnish a Contractor's Bond in triplicate in the form attached hereto with sureties listed by the United States Treasury Department as Acceptable Sureties, in a penal sum not less than the contract price.

12. Failure to Furnish Contractor's Bond. Should the successful Bidder fail or refuse to execute such counterparts or to furnish a Contractor's Bond (where required) within ten (10) days after written notification of the acceptance of the Proposal by the Owner, the Bidder will be considered to have abandoned the Proposal. In such event, the Owner shall be entitled (a) to enforce the bid bond in accordance with its terms, or (b) if a certified check has been delivered with the Proposal, to retain from the proceeds of the certified check the difference (not exceeding the amount of the certified check) between the amount of the Proposal and such larger amount for which the Owner may in good faith contract with another party to construct the Project. The term ''successful Bidder'' shall be deemed to include any Bidder whose Proposal is accepted after another Bidder has previously refused or has been unable to execute the counterparts or to furnish a satisfactory Contractor's Bond (where required.)

13. Contract is Entire Agreement. The Contract to be effected by the acceptance of the Proposal shall be deemed to include the entire agreement between the parties thereto, and the Bidder shall not claim any modification thereof resulting from any representation or promise made at any time by any officer, agent or employee of the Owner or by any other person.

14. Minor Irregularities. The Owner reserves the right to waive minor irregularities or minor errors in any Propose, if it appears to the Owner that such irregularities or errors were made through inadvertence. Any such irregularities or errors so waived must be corrected on the Proposal in which they occur prior to the acceptance thereof by the Owner.

15. Rejection of Bids. The Owner reserves the right to reject any or all Proposals. The attention of Bidders is specially called to the desirability of a proper balance between prices for labor and materials and between the total prices for the respective Construction Units. Lack of such balance may be considered as a reason for rejecting a Proposal.

16. Discrepancy in Unit Prices. Where the unit prices in the Contractor's Proposal are separated into three columns designated as ''Labor,'' ''Materials'' and ''Labor and Materials,'' and where a discrepancy appears between the sum shown in the ''Labor and Materials'' column and the correct addition of the sums appearing in the ''Labor'' column and the ''Materials'' column, the correct addition of the sums appearing in the ''Labor'' column and the ''Materials'' column shall control.

17. Bidding and Acceptance. If the Project includes more than one substation, bidders may bid on one or more substations. The Owner may award (1) a contract for all of the substations on the basis of the low total bid or, (2) separate contracts for one or more substations based on the low bids for the respective substations.

18. Definition of Terms. The terms ''Administrator,'' ''Engineer,'' ''Supervisor,'' ''Project,'' ''Completion of Construction'' and ''Completion of the Project'' as used throughout this Contract shall be as defined in Article VI, Section 1, of the Contractor's Proposal.

19. The Owner represents:

a. If by provisions of the Contractor's Proposal the Owner shall have undertaken to furnish any materials for the construction of the Project, such materials are on hand at locations specified or if such materials are not on hand they will be made available by the Owner to the successful Bidder at the locations specified before the time such materials are required for construction.

b. Title to the property on which the Project is to be constructed has been obtained.

c. All funds necessary for prompt payment for the construction of the Project will be available.

If the Owner shall fail to comply with any of the undertakings contained in the foregoing representations or if any of such representations shall be incorrect, the Bidder will be entitled to an extension of time of completion for a period equal to the delay, if any, caused by the failure of the Owner to comply with such undertakings or by any such incorrect representation; provided the Bidder shall have promptly notified the Owner in writing of its desire to extend the time of completion in accordance with the foregoing, and provided further that such extension, if any, of the time of completion shall be the sole remedy of the Bidder for the Owner's failure, because of conditions beyond the control and without the fault of the Owner, to furnish materials in accordance with subparagraph a. hereof.

_____ Owner

By _____

_____, 19____

Contractor's Proposal

(Proposal shall be submitted in ink or typewritten)

To: _____ (Hereinafter called the ''Owner'')

Article I—General

Section 1. Offer to Construct. The undersigned (hereinafter called the ''Bidder'') hereby proposes to receive and install such

materials and equipment as may hereinafter be specified to be furnished by the Owner, and to furnish all other materials and equipment, all machinery, tools, labor transportation and other means required to construct the rural electric project _____ in strict accordance with the Plans, Specifications for Construction and Construction Drawings for the prices hereinafter stated.

Section 2. Materials and Equipment. The Bidder agrees to furnish and use in the construction of the Project under this Proposal, in the event the Proposal is accepted, only such materials and equipment as are included in the current ''List of Materials Acceptable for Use on Systems of RUS Electrification Borrowers,'' including revisions adopted prior to the Bid Opening.

Section 3. Owner-Furnished Materials. The Bidder understands and agrees that, if this Proposal is accepted, the Owner will furnish to the Bidder the material set forth in the attached ''List of Owner's Materials on Hand'' (see page 10) and the Bidder will give a receipt (see page 12) therefore in writing to the Owner. The Bidder, further, will on behalf of the Owner accept delivery of such of the materials set forth in the attached ''List of Materials Ordered by Owner but Not Delivered'' (see page 11) as may be subsequently delivered and will promptly forward to the Owner for payment the supplier's invoice, together with the Bidder's receipt in writing for such materials. The materials referred to are on hand at, or will be delivered to, the locations specified in the Lists and the Bidder will use such materials in constructing the Project.

The value of the completed Construction Units certified by the Bidder each month pursuant to Article III, Section 1.a of this Proposal shall be reduced by an amount equal to the value of the materials installed by the Bidder during the preceding month which have been furnished by the Owner or the delivery of which has been accepted by the Bidder on behalf of the Owner. Only ninety percent (90%) of the remainder shall be paid prior to the Completion of the Project. The value of such materials shall be computed on the basis of the unit prices stated in the Lists. Materials, if any, not required for the Project, which have been furnished to the Bidder by the Owner or delivery of which has been accepted by the Bidder on behalf of the Owner, shall be returned to the Owner by the Bidder upon Completion of Construction of the Project. The value of all materials not installed in the Project nor returned to the Owner shall be deducted from the final payment to the Bidder.

The Owner shall not be obligated to furnish materials in excess of the quantities, size, kind and type set forth in the attached Lists. If the Owner furnishes, and the Bidder accepts, materials in excess thereof, the values of such excess materials shall be their actual cost as stated by the Owner.

Information on the shipping schedules of materials on the ''List of Materials Ordered by Owner But Not Delivered'' will be furnished to the Bidder as necessary during progress of the work.

Upon delivery the Bidder shall promptly receive, unload, transport and handle all materials and equipment on the ''List of Materials Ordered by Owner But Not Delivered'' at its expense and shall be responsible for demurrage, if any.

Section 4. Purchase of Materials Not Furnished by Owner. The Bidder will purchase all materials and equipment (other than owner-furnished materials) outright and not subject to any conditional sales agreements, bailment, lease or other agreement reserving unto the seller any right, title or interest therein. All such materials and equipment shall become the property of the Owner when erected in place.

Section 5. Proposal on Unit Basis. The Bidder understands and agrees that the various Construction Units on which bids are made are defined by symbols and descriptions in this Proposal, that all said bids are on a unit basis, and that the Owner may specify any number or combination of Construction Units that the Owner may deem necessary for the construction of the Project. Separate Construction Units are designated for each different arrangement which may be used in the construction of the Project. This Proposal is based on a consideration of each unit in place and includes only the materials listed on the corresponding Construction Drawings or description of unit where no drawing exists.

Section 6. Familiarity with Conditions. The Bidder has made a careful examination of the site of the Project to be constructed and of the Plans, Specifications for Construction, Construction Drawings, and form of Contractor's Bond attached hereto, and has become informed as to the location and nature of the proposed construction, the transportation facilities, the kind and character of soil and terrain to be encountered, and the kind of facilities required before and during the construction of the Project, and has become acquainted with the labor conditions, state and local laws and regulations which would affect work on the proposed construction.

Section 7. License. The Bidder warrants that a Contractor's License is ____, is not ____, required, and if required, it possesses Contractor's License No. _____ for the State of _____ in which the Project is located and said license expires on _____, 19____.

Section 8. The Bidder warrants that this Proposal is made in good faith and without collusion or connection with any person or persons bidding for the same work.

Section 9. The Bidder warrants that it possesses adequate financial resources and agrees that in the event this Proposal is accepted and a Contractor's Bond is required, it will furnish a Contractor's Bond in the form attached hereto, in a penal sum not less than the maximum Contract price, with a surety or sureties listed by the United States Treasury Department as Acceptable Sureties.

In the event that the surety or sureties on the performance bond delivered to the Owner contemporaneously with the execution of the Contractor on any bond or bonds delivered in substitution therefor or in addition thereto shall at any time become unsatisfactory to the Owner or the Administrator, the Bidder agrees to deliver to the Owner another or an additional bond.

Section 10. Taxes. The unit prices for Construction Units in this Proposal include provisions for the payment of all monies which will be payable by the Bidder or the Owner in connection with the construction of the Project on account of taxes imposed by any taxing authority upon the sale, purchase or use of materials, supplies and equipment, or services or labor of installation thereof, to be incorporated in the Project as part of such Construction Units. The Bidder agrees to pay all such taxes, except taxes upon the sale, purchase or use of owner-furnished materials and it is understood that, as to owner-furnished materials, the values stated in the attached ''List of Owner's Materials on Hand'' and ''List of Materials Ordered by Owner But Not Delivered'' include taxes upon the sale, purchase or use of owner-furnished materials, if applicable. The Bidder will furnish to the appropriate taxing authorities all required information and reports pertaining to the Project, except as to the owner-furnished materials.

Section 11. Changes in Quantities. The Bidder understands and agrees that the quantities called for in this Proposal are approximate, and that the total number of units upon which payment shall be made shall be as set forth in the inventory. If the Owner changes the quantity of any unit or units specified in this Proposal by more than 15%, and the materials cost to the Bidder is increased thereby to an extent which would not be adequately compensated by application of the unit prices in this Proposal to the revised quantity of such unit or units, such change, to the extent of the quantities of such units in excess of such 15%, shall be regarded as a change in the construction within the meaning of Article II, Section 1(d) of this Proposal.

LIST OF OWNER'S MATERIALS ON HAND

Item [1]	Description of material	Catalog No.	Quantity	Unit price	Extended price
Total. Above Materials are Located at:					

[1] Item corresponds with item in list of materials in construction drawings. Under Article I, Section 3, the value of these materials will be deducted from payments to the Bidder for completed Construction Units.

LIST OF MATERIALS ORDERED BY OWNER BUT NOT DELIVERED

Item [1]	Supplier name and address	Scheduled delivery date	Description of material	Catalog No.	Quantity	Unit price	Extended price
Total. Above Material to be Delivered to:							

[1] Item corresponds with item in list of materials in construction drawings. Under Article I, Section 3, the value of these materials will be deducted from payments to the Bidder for completed Construction Units.

Article II—Construction

Section 1. Time and Manner of Construction.

a. The Bidder agrees to commence construction of the Project on a date (hereinafter called the ''Commencement Date'') which shall be determined by the Engineer after notice in writing of approval of the Contract by the Administrator and notice in writing from the Bidder that the Bidder has sufficient materials to warrant commencement and continuation of construction, but in no event will the Commencement Date be later than _____ calendar days after date of approval of the Contract by the Administrator. The Bidder further agrees to prosecute diligently and to complete construction in strict accordance with the Plans, Specifications for Construction and Construction Drawings within _____ (_____) calendar days (excluding Sundays) after Commencement Date: Provided, however, that the Bidder will not be required to perform any construction on such days when in the judgment of the Engineer snow, rain, or

wind, or the results of snow, rain, or frost make it impracticable to perform any operation of construction and to the extent of the time lost due to the conditions described herein and approved in writing by the Engineer, the time of completion set out above will be extended if the Bidder makes a written request therefor to the Owner as provided in subsection b of this Section 1.

b. The time for Completion of Construction shall be extended for the period of any reasonable delay which is due exclusively to causes beyond the control and without the fault of the Bidder, including acts of God, fires, floods, inability to obtain materials and acts or omissions of the Owner with respect to matters for which the Owner is solely responsible: Provided, however, that no such extension of time for completion shall be granted the Bidder unless within ten (10) days after the happening of any event relied upon by the Bidder for such an extension of time the Bidder shall have made a request therefore in writing to the Owner, and provided further that no delay in such time of completion or in the progress of the work which results from any of the above causes, except acts or omissions of the Owner, shall result in any liability on the part of the Owner.

c. The sequence of construction shall be as set forth below, the numbers or names being the designations of substations or other major facilities (hereinafter called the ''Stations'') corresponding to the numbers or names shown on the maps attached hereto, or if no Stations are set forth below, the sequence of construction shall be as determined by the Bidder, subject to the approval of the Engineer. _____

d. The Owner, acting through the Engineer and with the approval of the Administrator,[1] may from time to time during the progress of the construction of the Project make such changes, additions to or subtractions from the Plans, Specifications for Construction, Construction Drawings, List of Materials and sequence of construction provided for in the previous paragraph which are part of the Contractor's Proposal as conditions may warrant: Provided, however, that if any change in the construction to be done shall require an extension of time, a reasonable extension will be granted if the Bidder shall make a written request therefor to the Owner within ten (10) days after any such change is made. And provided further, that if the cost to the Bidder of construction of the Project shall be materially increased by any such change or addition, the Owner shall pay the Bidder for the reasonable cost thereof in accordance with a Construction Contract Amendment signed by the Owner and the Bidder and approved by the Administrator,[2] but no claim for additional compensation for any such change or addition will be considered unless the Bidder shall have made a written request therefor to the Owner prior to the commencement of work in connection with such change or addition.

e. The Bidder will not perform any work hereunder on Sundays unless there is urgent need for such Sunday work and the Owner consents thereto in writing. The time for completion specified in subsection a of this Section 1 shall not be affected in any way by inclusion of this subsection nor by the Owner's consent or lack of consent to Sunday work hereunder.

Section 2. Environmental Protection. The Bidder shall perform work in such a manner as to maximize preservation beauty, conservation of natural resources and minimize marring and scarring of the landscape and silting of streams. The Bidder shall not deposit trash in streams or waterways, and shall not deposit herbicides or other chemicals or their containers in or near streams, waterways or pastures. The Bidder shall follow, under the general direction of the Engineer, the criteria relating to environmental protection as specified herein by the Engineer.

Section 3. The Bidder agrees that in the event this Proposal is accepted it will make available for use in connection with the proposed construction all necessary tools and equipment and qualified superintendents and foremen.

Section 4. Changes in Construction. The Bidder agrees to make changes in construction previously installed in the Project by the Bidder as required by the Owner. The compensation for such changes shall be as agreed upon in writing by the Bidder and the Owner prior to commencement of work in connection with such changes.

No payment shall be made to the Bidder for materials or labor involved in correcting errors or omissions on the part of the Bidder which result in construction not in accordance with the Plans and Specifications for Construction.

Section 5. Construction Not in Proposal. The Bidder also agrees that when it is necessary to construct units not shown in the

[1] As long as the total price of this contract including all amendments is less than 120 percent of the original contract price as stated in the acceptance hereto, amendments executed on RUS Form 238 are not subject to the approval of the Administrator. Whenever an amendment to this contract causes the total amended contract to exceed 120 percent of the original contract price, that amendment and all subsequent amendments to this contract shall be made subject to the approval of the Administrator.

[2] See Footnote 1.

Proposal it will construct such units for a price arrived at as follows:

a. The cost of materials shall be determined by the invoices.

b. The cost of labor shall be the reasonable cost thereof, as agreed upon by the Owner and Bidder prior to the commencement of work.

Section 6. Supervision and Inspection.

a. The Bidder shall cause the construction work on the Project to receive constant supervision by a competent superintendent (hereinafter called the ''Superintendent'') who shall be present at all times during working hours where construction is being carried on. The Bidder shall also employ, in connection with the construction of the Project, capable, experienced and reliable foremen and such skilled workmen as may be required for the various classes of work to be performed. Directions and instructions given to the Superintendent shall be binding upon the Bidder.

b. The Owner reserves the right to require the removal from the Project of any employee of the Bidder if in the judgment of the Owner such removal shall be necessary in order to protect the interest of the Owner. The Owner or the Supervisor, if any, shall have the right to require the Bidder to increase the number of its employees and to increase or change the amount or kind of tools and equipment if at any time the progress of the work shall be unsatisfactory to the Owner or Supervisor; but the failure of the Owner or Supervisor to give any such directions shall not relieve the Bidder of its obligations to complete the work within the time and in the manner specified in this Proposal.

c. The manner of construction of the Project, and all materials and equipment used therein, shall be subject to the inspection, tests and approval of the Owner and the Administrator, and the Bidder shall furnish all information required by the Owner or by the Administrator concerning the nature or source of any materials incorporated or to be incorporated in the Project. The Owner and the Administrator shall have the right to inspect all payrolls, invoices of materials, and other data and records of the Bidder and of any subcontractor, relevant to the construction of the Project. The Bidder shall provide all reasonable facilities necessary for such inspection and tests. The Bidder shall have an authorized agent accompany the Engineer when final inspection is made and, if requested by the owner, when any other inspection is made.

d. In the event that the Owner, or the Administrator, shall determine that the construction contains or may contain numerous defects, it shall be the duty of the Bidder and the Bidder's Surety or Sureties, if any, to have an inspection made by an engineer approved by the Owner and the Administrator for the purpose of determining the exact nature, extent and location of such defects.

e. The Engineer may recommend to the Owner that the Bidder suspend the work wholly or in part for such period or periods as the Engineer may deem necessary due to unsuitable weather or such other conditions as are considered unfavorable for the satisfactory prosecution of the work or because of the failure of the Bidder to comply with any of the provisions of the Contract: Provided, however, that the Bidder shall not suspend work pursuant to this provision without written authority from the Owner so to do. The time of completion hereinabove set forth shall be increased by the number of days of any such suspension, except when such suspension is due to the failure of the Bidder to comply with any of the provisions of this Contract. In the event that work is suspended by the Bidder with the consent of the Owner, the Bidder before resuming work shall give the Owner at least twenty-four (24) hours notice thereof in writing.

Section 7. Defective Materials and Workmanship.

a. The acceptance of any materials, equipment (except owner-furnished materials) or any workmanship by the Owner or the Engineer shall not preclude the subsequent rejection thereof if such materials, equipment, or workmanship shall be found to be defective after delivery or installation, and any such materials, equipment or workmanship found defective before final acceptance of the construction shall be replaced or remedied, as the case may be, by and at the expense of the Bidder. Any such condemned material or equipment shall be immediately removed from the site of the Project by the Bidder at the Bidder's expense. The Bidder shall not be entitled to any payment hereunder so long as any defective materials, equipment or workmanship in respect to the Project, of which the Bidder shall have had notice, shall not have been replaced or remedied, as the case may be.

b. Notwithstanding any certificate which may have been given by the Owner or the Engineer, if any materials, equipment (except owner-furnished materials) or any workmanship which does not comply with the requirements of this Contract shall be discovered within one (1) year after Completion of Construction of the Project, the Bidder shall replace such defective materials or equipment or remedy any such defective workmanship within thirty (30) days after notice in writing of the existence thereof shall have been given by the Owner. If the Bidder shall be called upon to replace any defective materials or equipment or to remedy defective workmanship as herein provided, the Owner, if so requested by the Bidder shall deenergize that portion of the Project involved in such work. In the event of failure by the Bidder so to do, the Owner

may replace such defective materials or equipment or remedy such defective workmanship, as the case maybe, and in such event the Bidder shall pay to the Owner the cost and expense thereof.

Article III—Payments and Release of Liens

Section 1. Payments to Bidder.

a. Within the first fifteen (15) days of each calendar month, the Owner shall make partial payment to the Bidder for construction accomplished during the preceding calendar month on the basis of completed Construction Units furnished and certified to by the Bidder, recommended by the Engineer, and approved by the Owner solely for the purposes of payment: Provided, however, that such approval shall not be deemed approval of the workmanship or materials. Only ninety percent (90%) of each such estimate approved during the construction of the Project shall be paid by the Owner to the Bidder prior to Completion of the Project: Provided, however, that at any time after work, which, in the sole determination of the Engineer, amounts to fifty percent (50%) of the maximum Contract price has been completed, the Owner may elect, in lieu of paying ninety percent (90%) of each such subsequent estimate, to pay each such subsequent estimate in full. Upon completion by the Bidder of the construction of the Project, the Engineer will prepare an inventory of the Project showing the total number and character of Construction Units and, after checking such inventory with the Bidder, will certify it to the Owner together with a certificate of the total cost of the construction performed. Upon the approval of such certificates by the Owner and the Administrator, the Owner shall make payment to the Bidder of all amounts to which the Bidder shall be entitled thereunder which shall not have been paid, provided, however, that such final payment shall be made not later than ninety (90) days after the date of Completion of Construction of the Project as specified in the Certificate of Completion, unless withheld because of the fault of the Bidder.

b. The Bidder shall be paid on the basis of the number of Construction Units actually installed at the direction of the Owner shown by the inventory: Provided, however, that the total cost shall not exceed the maximum Contract price for the construction of the Project as set forth in the Acceptance, unless such excess shall have been approved in writing by the Administrator.

c. Notwithstanding the provisions of Section la above, the Bidder may, by giving written notice thereof to the Owner, elect to receive payment in full for any Station of the Project upon:

(1) completion of construction of such Station as certified by the Engineer and approved by the Owner and the Administrator;

(2) submission to the Owner and the Administrator of the releases of lien and the certificate referred to in Section 2 hereof;

(3) approval by the Owner and the Administrator of the inventory in respect of such Station; and

(4) submission to the Owner and the Administrator of the consent in writing by the Surety or Sureties, if any, on the Contractor's Bond to payment in full for such Station prior to Completion of the Project.

d. Interest at the rate of _____ percent[3] (_____%) per annum shall be paid by the Owner to the Bidder on all unpaid balances due on monthly estimates, commencing fifteen (15) days after the due date; provided the delay in payment beyond the due date is not caused by any condition within the control of the Bidder. The due date for purposes of such monthly payment shall be the fifteenth day of each calendar month provided (1) the Bidder on or before the fifth day of such month shall have submitted its certification of Construction Units completed during the preceding month and (2) the Owner on or before the fifteenth day of such month shall have approved such certification. If, for reasons not due to the Bidder's fault, such approval shall not have been given on or before the fifteenth day of such month, the due date for purposes of this subsection d shall be the fifteenth day of such month notwithstanding the absence of the approval of the certification.

e. Interest at the rate of ——— percent[4] (———%) per annum shall be paid by the Owner to the Bidder on the final payment for the Project or any completed Station thereof, commencing fifteen (15) days after the due date. The due date for purposes of such final payment shall be the date of approval by the Administrator of all of the documents requiring such approval, as a condition precedent to the making of final payment, or ninety (90) days after the date of Completion of Construction of the Project, as specified in the Certificate of Completion, whichever date is earlier.

f. No payment shall be due while the Bidder is in default in respect of any of the provisions of this Contract and the Owner may withhold from the Bidder the amount of any claim by a third party against either the Bidder or the Owner based upon an alleged failure of the Bidder to perform the work hereunder in accordance with the provisions of this Contract.

Section 2. Release of Liens and Certificate of Contractor. (See sample RUS Form 224, Waiver and Release of Lien and sample RUS

[3] The Owner shall insert a rate equal to the lowest ''Prime Rate'' listed in the ''Money Rates'' section of the Wall Street Journal on the date such invitation to bid is issued.

[4] See Footnote 3.

Form 231, Certificate of Contractor.) Upon the completion by the Bidder of the construction of the Project (or any Station thereof if the Bidder shall elect to receive payment in full for any Station when completed as provided above) but prior to final payment to the Bidder, the Bidder shall deliver to the Owner, in duplicate, releases of all liens and of rights to claim any lien, in the form attached hereto from all manufacturers, materialmen, and subcontractors furnishing services or materials for the Project or such Station and a certificate in the form attached hereto to the effect that all labor used on or for the Project or such Station has been paid and that all such releases have been submitted to the Owner for approval.

Section 3. Payments to Materialmen and Subcontractors. The Bidder shall pay each materialman and each subcontractor, if any, within five (5) days after receipt of any payment from the Owner, the amount thereof allowed the Bidder for and on account of materials furnished or construction performed by each materialman or each subcontractor.

Article IV—Particular Undertakings of the Bidder

Section 1. Protection to Persons and Property. The Bidder shall at all times take all reasonable precautions for the safety of employees on the work and of the public, and shall comply with all applicable provisions of Federal, State, and Municipal safety laws and building and construction codes, as well as the safety rules and regulations of the Owner. All machinery and equipment and other physical hazards shall be guarded in accordance with the ''Manual of Accident Prevention in Construction'' of the Associated General Contractors of America unless such instructions are incompatible with Federal, State, or Municipal laws or regulations.

The following provisions shall not limit the generality of the above requirements:

a. The Bidder shall at no time and under no circumstances cause or permit any employee of the Bidder to perform any work upon energized lines, or upon poles carrying energized lines, unless otherwise specified in the Notice and Instructions to Bidders.

b. The Bidder shall so conduct the construction of the Project as to cause the least possible obstruction of public highways.

c. The Bidder shall provide and maintain all such guard lights and other protection for the public as may be required by applicable statutes, ordinances and regulations or by local conditions.

d. Temporary water, light, power and other utility service shall be arranged for by the Bidder for construction purposes at its own expense.

e. The Bidder shall do all things necessary or expedient to properly protect any and all adjacent lines, highways and any and all property of others from damage, and in the event that any such lines, highways or other property are damaged in the course of construction of the Project, the Bidder shall at its own expense restore any or all of such damaged property immediately to as good a state as before such damage occurred.

f. The Project, from the commencement of work to completion, or to such earlier date or dates when the Owner may take possession and control in whole or in part as hereinafter provided shall be under the charge and control of the Bidder and during such period of control by the Bidder all risks in connection with the construction of the Project and the materials to be used therein shall be borne by the Bidder. The Bidder shall make good and fully repair all injuries and damages to the Project or any portion thereof under the control of the Bidder by reason of any act of God or other casualty or cause whether or not the same shall have occurred by reason of the Bidder's negligence.

(i) To the maximum extent permitted by law, Bidder shall defend, indemnify, and hold harmless Owner and Owner's directors, officers, and employees from all claims, causes of action, losses, liabilities, and expenses (including reasonable attorney's fees) for personal loss, injury, or death to persons (including but not limited to Bidder's employees) and loss, damage to or destruction of Owner's property or the property of any other person or entity (including but not limited to Bidder's property) in any manner arising out of or connected with the Contract, or the materials or equipment supplied or services performed by Bidder, its subcontractors and suppliers of any tier. But nothing herein shall be construed as making Bidder liable for any injury, death, loss, damage, or destruction caused by the sole negligence of Owner.

(ii) To the maximum extent permitted by law, Bidder shall defend, indemnify, and hold harmless Owner and Owner's directors, officers, and employees from all liens and claims filed or asserted against Owner, its directors, officers, and employees, or Owner's property or facilities, for services performed or materials or equipment furnished by Bidder, its subcontractors and suppliers of any tier, and from all losses, demands, and causes of action arising out of any such lien or claim. Bidder shall promptly discharge or remove any such lien or claim by bonding, payment, or otherwise and shall notify Owner promptly when it has done so. If Bidder does not cause such lien or claim to be discharged or released by payment, bonding, or otherwise, Owner shall have the right (but shall not be obligated) to pay all sums necessary to obtain any such discharge or release and to deduct all amounts so paid from the amount due Bidder.

(iii) Bidder shall provide to Owner's satisfaction evidence of Bidder's ability to comply with the indemnification provisions of

subparagraphs i and ii above, which evidence may include but may not be limited to a bond or liability insurance policy obtained for this purpose through a licensed surety or insurance company.

g. Any and all excess earth, rock, debris, underbrush and other useless material shall be removed by the Bidder from the site of the Project as rapidly as practicable as the work progresses.

h. Upon violation by the Bidder of any of the provisions of this Section, after written notice of such violation given to the Bidder by the Engineer or the Owner, the Bidder shall immediately correct such violation. Upon failure of the Bidder so to do the Owner may correct such violation at the Bidder's expense: Provided, however, that the Owner may, if it deems it necessary or advisable, correct such violation at the Bidder's expense without such prior notice to the Bidder.

i. The Bidder shall submit to the Owner monthly reports in duplicate of all accidents, giving such data as may be prescribed by the Owner.

Section 2. Insurance. The Bidder shall take out and maintain throughout the contract period insurance of the following types and minimum amounts:

(a) Workers' compensation and employers' liability insurance, as required by law, covering all their employees who perform any of the obligations of the contractor, engineer, and architect under the contract. If any employer or employee is not subject to the workers' compensation laws of the governing state, then insurance shall be obtained voluntarily to extend to the employer and employee coverage to the same extent as though the employer or employee were subject to the workers' compensation laws.

(b) Public liability insurance covering all operations under the contract shall have limits for bodily injury or death of not less than $1 million each occurrence, limits for property damage of not less than $1 million each occurrence, and $1 million aggregate for accidents during the policy period. A single limit of $1 million of bodily injury and property damage is acceptable. This required insurance may be in a policy or policies of insurance, primary and excess including the umbrella or catastrophe form.

(c) Automobile liability insurance on all motor vehicles used in connection with the contract, whether owned, nonowned, or hired, shall have limits for bodily injury or death of not less than $1 million per person and $1 million per occurrence, and property damage limits of $1 million for each occurrence. This required insurance may be in a policy or policies of insurance, primary and excess including the umbrella or catastrophe form.

The Owner shall have the right at any time to require public liability insurance and property damage liability insurance greater than those required in subsection ''b'' and ''c'' of this Section. In any such event, the additional premium or premiums payable solely as the result of such additional insurance shall be added to the Contract price.

The Owner shall be named as Additional Insured on all policies of insurance required in subsections ''b'' and ''c'' of this Section.

The policies of insurance shall be in such form and issued by such insurer as shall be satisfactory to the Owner. The Bidder shall furnish the Owner a certificate evidencing compliance with the foregoing requirements which shall provide not less than (30) days prior written notice to the Owner of any cancellation or material change in the insurance.

Section 3. Delivery of Possession and Control to Owner.

a. Upon written request of the Owner the Bidder shall deliver to the Owner full possession and control of any portion of the Project provided the Bidder shall have been paid at least ninety percent (90%) of the cost of construction of such portion. Upon such delivery of the possession and control of any portion of the Project to the Owner, the risk and obligations of the Bidder as set forth in Article IV, Section 1f hereof with respect to such portion of the Project so delivered to the Owner shall be terminated: Provided, however, that nothing herein contained shall relieve the Bidder of any liability with respect to defective materials and workmanship as contained in Article II, Section 6 hereof.

b. Where the construction of a Station as hereinbefore defined in Article II, Section lc and Article III, Section 1c shall have been completed by the Bidder, the Owner agrees, after receipt of a written request from the Bidder, to accept delivery of possession and control of such Station upon the issuance by the Engineer of a written statement that the Station has been inspected and found acceptable by the Engineer. Upon such delivery of the possession and control of any such Station to the Owner, the risk and obligations of the Bidder as set forth in Article IV, Section 1f hereof with respect to such Station so delivered to the Owner shall be terminated: Provided, however, that nothing herein contained shall relieve the Bidder of any liability with respect to defective materials or workmanship as contained in Article II, Section 6 hereof.

Section 4. Assignment of Guarantees. All guarantees of materials and workmanship running in favor of the Bidder shall be transferred and assigned to the Owner prior to the time the Bidder receives final payment.

Article V—Remedies

Section 1. Completion on Bidder's Default. If default shall be made by the Bidder or by any subcontractor in the performance of any

of the terms of this Proposal, the Owner, without in any manner limiting its legal and equitable remedies in the circumstances, may serve upon the Bidder and the Surety or Sureties, if any, upon the Contractor's Bond or Bonds a written notice requiring the Bidder to cause such default to be corrected forthwith. Unless within twenty (20) days after the service of such notice upon the Bidder such default shall be corrected or arrangements for the correction thereof satisfactory, to both the Owner and the Administrator shall be made by the Bidder or its Surety or Sureties, if any, the Owner may take over the construction of the Project and prosecute the same to completion by Contract or otherwise for the account and at the expense of the Bidder, and the Bidder and its Surety or Sureties, if any, shall be liable to the Owner for any cost or expense in excess of the Contract price occasioned thereby. In such event the Owner may take possession of and utilize, in completing the construction of the Project, any materials, tools, supplies, equipment, appliances, and plant belonging to the Bidder or any of its subcontractors, which may be situated at the site of the Project. The Owner in such contingency may exercise any rights, claims or demands which the Bidder may have against third persons in connection with this Contract and for such purpose the Bidder does hereby assign, transfer and set over unto the Owner all such rights, claims and demands.

Section 2. Liquidated Damages. The time of the Completion of Construction of the Project is of the essence of the Contract. Should the bidder neglect, refuse or fail to complete the construction within the time herein agreed upon, after giving effect to extensions of time, if any, herein provided, then, in that event and in view of the difficulty of estimating with exactness damages caused by such delay, the Owner shall have the right to deduct from and retain out of such moneys which may be then due, or which may become due and payable to the Bidder the sum of _____ dollars (_____) per day for each and every day that such construction is delayed on its completion beyond the specified time, as liquidated damages and not as a penalty; if the amount due and to become due from the Owner to the Bidder is insufficient to pay in full any such liquidated damages, the Bidder, shall pay to the Owner the amount necessary to effect such payment in full: Provided, however, that the owner shall promptly notify the Bidder in writing of the manner in which the amount retained, deducted or claimed as liquidated damages was computed.

Section 3. Cumulative Remedies. Every right or remedy herein conferred upon or reserved to the Owner or the Government or the Administrator shall be cumulative, shall be in addition to every right and remedy now or hereafter existing at law or in equity or by statute and the pursuit of any right or remedy shall not be construed as an election: Provided, however, that the provisions of Section 2 of this Article shall be the exclusive measure of damages for failure by the Bidder to complete the construction of the Project within the time herein agreed upon.

Article VI—Miscellaneous

Section 1. Definitions.

a. The term ''Administrator'' shall mean the Administrator of the Rural Utilities Service of the United States of America and his duly authorized representatives or any other person in whom or authority in which may be vested the duties and functions which the Administrator is now authorized by law to perform.

b. The term ''Engineer'' shall mean the engineer employed by the Owner, with the approval of the Administrator, to provide engineering services for the Project, and said Engineer's duly authorized assistants and representatives.

c. The term ''Supervisor'' shall mean the person, if any, appointed by the Administrator as the representative of the Government under the provisions of the Loan Contract providing for such appointment in special cases. The term is limited to such special representative of the Government, if any, who is responsible exclusively to the Administrator and does not refer to the Manager or any other person employed by the Owner and responsible to it.

d. The term ''Project'' shall mean the substations or other major facilities described in the Plans, Specifications for Construction, and Construction Drawings.

e. The term ''Completion of Construction'' shall mean full performance by the Bidder of the Bidder's obligations under the Contract and all amendments and revisions thereof except the Bidder's obligations in respect of (1) Releases of Liens and Certificate of Contractor under Article III, Section 2 hereof, (2) the inventory referred to in Article III, Section I hereof, and (3) other final documents. The term ''Completion of the Project'' shall mean full performance by the Bidder of the Bidder's obligations under the Contract and all amendments and revisions thereof. The Certificate of Completion, signed by the Engineer and approved in writing by the Owner and the Administrator, shall be the sole and conclusive evidence as to the date of Completion of Construction and as to the fact of Completion of the Project.

Section 2. Materials and Supplies. In the performance of this contract there shall be furnished only such unmanufactured articles, materials, and supplies as have been mined or produced in the United States, Mexico, or Canada, and only such manufactured articles, materials, and supplies as have been manufactured in the United States

substantially all from articles, materials, or supplies mined, produced or manufactured, as the case may be, in the United States, Mexico, or Canada; provided that other articles, materials, or supplies may be used in the event and to the extent that the Administrator shall expressly in writing authorize such use pursuant to the provisions of the Rural Electrification Act of 1938, being Title IV of Public Resolution No. 122, 75th Congress, approved June 21, 1938. The Seller agrees to submit to the Purchaser such certificates with respect to compliance with the foregoing provision as the Administrator from time to time may require.

Section 3. Patent Infringement. The Bidder shall save harmless and indemnify the Owner from any and all claims, suits and proceedings for the infringement of any patent or patents covering any materials or equipment used in construction of the Project.

Section 4. Permits for Explosives. All permits necessary for the handling or use of dynamite or other explosives in connection with the construction of the Project shall be obtained by and at the expense of the Bidder.

Section 5. Compliance with Statutes and Regulations. The Bidder shall comply with all applicable statutes, ordinances, rules, and regulations pertaining to the work. The Bidder acknowledges that it is familiar with the Rural Electrification Act of 1936, as amended, the so-called ''Kick-Back'' Statute (48 Stat. 948), and regulations issued pursuant thereto, and 18 U.S.C. §§287, 1001, as amended. The Bidder understands that the obligations of the parties hereunder are subject to the applicable regulations and orders of Governmental Agencies having jurisdiction in the premises.

Section 6. Equal Opportunity Provisions.

a. Bidder's Representations.

The Bidder represents that:

It has ____, does not have ____, 100 or more employees, and if it has, that it has ____, has not ____, furnished the Equal Employment Opportunity-Employers Information Report EEO–1, Standard Form 100, required of employers with 100 or more employees pursuant to Executive Order 11246 and Title VII of the Civil Rights Act of 1964.

The Bidder agrees that it will obtain, prior to the award of any subcontract for more than $10,000 hereunder to a subcontractor with 100 or more employees, a statement, signed by the proposed subcontractor, that the proposed subcontractor has filed a current report on Standard Form 100.

The Bidder agrees that if it has 100 or more employees and has not submitted a report on Standard Form 100 for the current reporting year and that if this Contract will amount to more than $10,000, the Bidder will file such report, as required by law, and notify the Owner in writing of such filing prior to the Owner's acceptance of this Proposal.

b. Equal Opportunity Clause. During the performance of this Contract, the Bidder agrees as follows:

(1) The Bidder will not discriminate against any employee or applicant for employment because of race, color, religion, sex or national origin. The Bidder will take affirmative action to ensure that applicants are employed, and that employees are treated during employment without regard to their race, color, religion, sex or national origin. Such action shall include, but not be limited to, the following: Employment, upgrading, demotion or transfer; recruitment or recruitment advertising; layoff or termination; rates of pay or other forms of compensation; and selection for training, including apprenticeship. The Bidder agrees to post in conspicuous places, available to employees and applicants for employment, notices to be provided setting forth the provisions of this Equal Opportunity Clause.

(2) The Bidder will, in all solicitations or advertisements for employees placed by or on behalf of the Bidder, state that all qualified applicants will receive consideration for employment without regard to race, color, religion, sex or national origin.

(3) The Bidder will send to each labor union or representative of workers with which it has a collective bargaining agreement or other contract or understanding, a notice to be provided advising the said labor union or workers' representatives of the Bidder's commitments under this section, and shall post copies of the notice in conspicuous places available to employees and applicants for employment.

(4) The Bidder will comply with all provisions of Executive Order 11246 of September 24, 1965, and of the rules, regulations and relevant orders of the Secretary of Labor.

(5) The Bidder will furnish all information and reports required by Executive Order 11246 of September 24, 1965, and by rules, regulations and orders of the Secretary of Labor, or pursuant thereto, and will permit access to its books, records and accounts by the administering agency and the Secretary of Labor for purposes of investigation to ascertain compliance with such rules, regulations and orders.

(6) In the event of the Bidder's noncompliance with the Equal Opportunity Clause of this Contract or with any of the said rules, regulations or orders, this Contract may be cancelled, terminated or suspended in whole or in part and the Bidder may be declared ineligible for further Government contracts or federally assisted construction contracts in accordance with procedures authorized in Executive Order 11246 of September 24, 1965, and such other sanctions may be imposed and remedies invoked as provided in Executive Order 11246 of September 24, 1965, or by rule, regulation or order of the Secretary of Labor, or as otherwise provided by law.

(7) The Bidder will include this Equal Opportunity Clause in every subcontract or purchase order unless exempted by the rules, regulations or orders of the Secretary of Labor issued pursuant to Section 204 of Executive Order 11246 of September 24, 1965, so that such provisions will be binding upon each subcontractor or vendor. The Bidder will take such action with respect to any subcontractor purchase order as the administering agency may direct as a means of enforcing such provisions, including sanctions for noncompliance: Provided, however, That in the event a Bidder becomes involved in, or is threatened with, litigation with a subcontractor or vendor as a result of such direction by the administering agency, the Bidder may request the United States to enter into such litigation to protect the interests of the United States.

c. Certificate of Nonsegregated Facilities. The Bidder certifies that it does not maintain or provide for its employees any segregated facilities at any of its establishments, and that it does not permit its employees to perform their services at any location, under its control, where segregated facilities are maintained. The Bidder certifies further that it will not maintain or provide for its employees any segregated facilities at any of its establishments, and that it will not permit its employees to perform their services at any location, under its control, where segregated facilities are maintained. The Bidder agrees that a breach of this certification is a violation of the Equal Opportunity Clause in this Contract. As used in this certification, the term ''segregated facilities'' means any waiting room, work areas, restrooms and washrooms, restaurants and other eating areas, timeclocks, locker rooms and other storage or dressing areas, parking lots, drinking fountains, recreation or entertainment areas, transportation, and housing facilities provided for employees which are segregated by explicit directive or are in fact segregated on the basis of race, color, religion, or national origin, because of habit, local custom, or otherwise. The Bidder agrees that (except where it has obtained identical certifications from proposed subcontractors for specific time periods) it will obtain identical certifications from proposed subcontractors prior to the award of subcontracts exceeding $10,000 which are not exempt from the provisions of the Equal Opportunity Clause, and that it will retain such certifications in its files.

Section 7. Franchises. The Bidder shall be under no obligation to obtain or assist in obtaining: Any franchises, authorizations, permits or approvals required to be obtained by the Owner from Federal, State, County, Municipal or other authorities; or any agreements between the Owner and third parties with respect to any matters incident to the construction and operation of the Project.

Section 8. Nonassignment of Contract. The Bidder shall perform directly and without subcontracting not less than twenty-five per centum (25%) of the construction of the Project, to be calculated on the basis of the total Contract price. The Bidder shall not assign the Contract effected by an acceptance of this Proposal or any interest in any funds that may be due or become due hereunder or enter into any contract with any person, firm or corporation for the performance of the Bidder's obligations hereunder or any part thereof, without the approval in writing of the Owner and of the Surety and Sureties, if any, on any bond furnished by the Bidder for the faithful performance of the Bidder's obligations hereunder. If the Bidder, with the consent of the Owner and any Surety or Sureties on the Contractor's Bond or Bonds, shall enter into a subcontract with any subcontractor for the performance of any part of this Contract, the Bidder shall be as fully responsible to the Owner and the Government for the acts and omissions of such subcontractor and of persons employed by such subcontractor as the Bidder would be for its own acts and omissions and those of persons directly employed by it.

Section 9. Extension to Successors and Assigns. Each and all of the covenants and agreements herein contained shall extend to and be binding upon the successors and assigns of the parties hereto.

Section 10. Contractor. Upon acceptance of this Proposal, the successful Bidder shall be the Contractor and all references in the Proposal to the Bidder shall apply to the Contractor.

Section 11. Approval by the Administrator. No acceptance of this Proposal shall become effective until approved in writing by the Administrator: Provided, however, that no obligations shall arise hereunder unless such approval is given within forty-five (45) days from the date of acceptance by the Owner.

_____ (Bidder)
By _____ (President)
_____ (Address)
Attest: _____ (Secretary)
Date _____

The Proposal must be signed with the full name of the Bidder. If the Bidder is a partnership, the Proposal must be signed in the partnership name by a partner. If the Bidder is a corporation, the Proposal must be signed in the corporate name by a duly authorized officer and the corporate seal affixed and attested by the Secretary of the Corporation.

Specifications for Construction

Section 1. Scope of Work. The work covered by this Proposal embraces the complete construction of one or more substations or other major facilities as specified in the Acceptance, any omissions or discrepancies notwithstanding. All material furnished by

the Bidder shall be new and in conformance with the Specifications for Construction. All construction work shall be done in a thorough and workmanlike manner in accordance with the Plans, Specifications for Construction and Construction Drawings. Deviations from the Plans, Specifications for Construction, and Construction Drawings shall not be permitted except upon the written permission of the Owner given with the approval of the Administrator.

This contract does not include _____ which is to be done by others.

Section 2. Materials. It is the intent of these specifications that insofar as materials required are included in the Rural Utilities Service ''List of Materials Acceptable for use on Systems of RUS Electrification Borrowers,'' such materials only shall be used. In the event that any materials are required beyond the scope of the ''List of Materials Acceptable for use on Systems of RUS Electrification Borrowers,'' specifications for such materials will be included on the drawings or in a supplement to these specifications.

Section 3. Drawings. The Drawings and Specifications collectively, show the specifications of the material and equipment shown thereon, and include schedules of conduit, cable and other items not readily ascertained from the picture drawings. Such schedules show the quantities, sizes, types and other pertinent information; method of installation, and construction details are indicated clearly. The drawings and specifications in the attached List of Drawings are made a part of these contract Specifications.

Section 4. Description of Construction Units. Each Construction Unit consists of a complete installation of the designated portion of a substation or switching station as specified on the drawings, together with connections to associated equipment. Each Construction Unit represents all labor and material including necessary accessories completely installed and tested in satisfactory operation. Full identification of each Construction Unit and all necessary specifications of the installation shall be shown on the drawings. Items of material in each Construction Unit shall be of the designated size, rating, type, voltage, or other specification in accordance With the drawings. The bill of material drawing for each station should contain adequate identification of the Construction Units under which the material is to be installed and should show what items of material may be partly or entirely found in the lists of owner-furnished materials. All items of equipment, unless otherwise specified, are mounted on a structure which shall be a Construction Unit of Group A.

Each Construction Unit shall be designated by the letter of the Group to which it belongs and an identifying number. The same item of equipment shall carry the same Construction Unit designation in all the stations. Items of equipment designated by the same Construction Unit in one station shall be of only one kind as to voltage, type and other specifications. The bid sheet for each station shall be prepared separately from other stations and shall contain all unit prices for Construction Units contained in the station. It is intended that in all cases the ''Name and Description of Construction Unit'' column of the Bid Sheets shall contain sufficient information to identify the Construction Unit.

Additional description to one or more of the Groups may be provided by the Engineer if deemed necessary to clarify the intent of these Specifications for Construction.

Group A. Structures. A Construction Unit consists of a structure, or structures, with bus supports including insulators and fittings, buses, conductors and overhead ground wires to adjacent structures within the station, grounding material to connect equipment with the ground bus, and associated material including mounting brackets, supports for equipment, clamps and connectors, all as specified in the drawings.

Group B. Three-Pole Group Operated Air Break Switches. A Construction Unit consists of one 3-pole group operated air break switch with all accessories and operating mechanisms as specified in the drawings.

Group C. Lightning Arresters. A Construction Unit consists of one single-phase lightning arrester.

Group D. Single Pole Disconnecting Switches. A Construction Unit consists of one single pole disconnecting or by-pass switch as specified in the drawings. If a fuse disconnect switch is specified, the fuse is included with the switch.

Group E. Oil Circuit Breakers. A Construction Unit consists of one complete three-phase power circuit breaker complete with supporting frame and control cabinet, unless shown otherwise in the drawings, mounted as specified in the drawings.

Group F. Oil Circuit Reclosers. A Construction Unit consists of a complete single-phase or three-phase oil circuit recloser as specified in the drawings.

Group G. Meters, Relays and Instrument Transformers. A Construction Unit consists of one meter, relay, potential transformer or current transformer.

Group H. Transformers. A Construction Unit consists of one power transformer or one station service transformer either single-phase or three-phase as specified in the drawings.

Group I. Voltage Regulators. A Construction Unit consists of one single-phase or three-phase voltage regulator as specified in the drawings.

Group J. Communications and Supervisory Control Equipment. A Construction Unit

consists of carrier current equipment, microwave, or other types of communications and supervisory control equipment as specified in the drawings.

Group K. Conduit and Cable. A Construction Unit consists of the wire, cable, conduit and accessories necessary to complete the installation of equipment in accordance with the specifications and drawings, where such installation has not been included in other Groups.

Group L. Foundations. A Construction Unit consists of concrete footings and foundations except for the fence, as specified in the drawings.

Group M. Site Preparation. A Construction Unit consists of clearing, grading, drainage work, and surfacing, as specified in the drawings.

Group N. Fence. A Construction Unit consists of the complete installation of the fence, gates, etc., as specified in the drawings.

Group O. Station Grounding. A Construction Unit consists of the complete ground bus including ground rods, grounding mats or platforms, except as otherwise provided in other Groups, with connections to structures, equipment, and fence as specified in the drawings.

Group P. Building. A Construction Unit consists of a control building or cabinet, on a foundation of Group L and the facilities and equipment installed therein as specified in the drawings, except as otherwise provided in other Groups.

Other Groups. The Engineer shall specify such additional Groups as may be necessary for the completion of the Project. Description of these Groups shall be provided by an addition to this Section of the Specifications for Construction.

_____ Station construction Units
Unit No. _____
Name and Description of Construction Unit _____
No. of Units _____
Unit Prices
Labor _____
Materials _____
Labor and Materials _____
Extended Price—Labor and Materials _____
Total Price _____

Acceptance

Subject to the approval of the Administrator, the Owner hereby accepts the foregoing Proposal of the Bidder, _____ for the construction of the following substations or other major facilities:

_____ Substation, $_____
_____ $_____
The total contract price is $_____
_____ Owner
By _____ President
_____ Secretary
_____ Date of Contract

[End of clause]

§ 1726.341 Electric system communications and control equipment contract, RUS Form 786.

The contract form in this section shall be used when required by this part.

ELECTRIC SYSTEM COMMUNICATIONS AND CONTROL EQUIPMENT CONTRACT (INCLUDING INSTALLATION)

Proposal to Furnish, Deliver, and Install Equipment and Materials

To:_____ (hereinafter called the ''Purchaser'')

The undersigned (hereinafter called the ''Seller'') hereby proposes to furnish, deliver, install, align and test the equipment and materials, (hereinafter called the ''Equipment'') described in the plans, specifications and drawings (hereinafter called the ''Specifications'') attached hereto identified as _____ and made a part hereof, and other Attachments identified as _____ and made a part hereof, for the electric system designated _____, financed in whole or in part by a loan to the Purchaser by the United States of America, acting through the Administrator of the Rural Utilities Service (hereinafter called the ''Administrator'').

The Seller has become informed as to the location and characteristics of the proposed Equipment and the facilities over which the Equipment is to perform, has become informed as to the kind of facilities required before and during the delivery and installation of the Equipment and has become acquainted with the labor conditions which would affect the work as well as the ecological and environmental criteria to be followed. The Seller agrees that if its Proposal is accepted the following terms and conditions shall govern.

If, in submitting this Proposal, the Seller has made any change in the form of Proposal furnished by the Purchaser, the Seller understands that the Purchaser and the Administrator may evaluate the effect of such change as they see fit or they may exclude the Proposal from consideration.

Article I

Section 1. Proposal Price. The Seller will furnish, deliver, install, align and test the Equipment described in the Specifications for the following sum:

Total Contract Price $_____
Delivery time is _____ calendar days.
Completion time is _____ calendar days.

A detailed price breakdown by locations, showing equipment pricing and installation

pricing, is given in the Attachment identified as _____ and made a part hereof.

Section 2. Changes. The Purchaser, subject to the approval of the Administrator,[1] may from time to time during the performance of the work make such changes, additions to or subtractions from the Specification's which are part of the Proposal as conditions may warrant; provided, however, that, if any change in the work shall require an extension of time, a reasonable extension will be granted if the Seller shall make a written request therefor to the purchaser within ten (10) days after any such change is made and, provided further, that, if the cost to the Seller shall be increased or decreased by any such change or addition, the contract price shall be increased or decreased by the reasonable cost thereof, in accordance with a contract amendment signed by the Purchaser and the Seller and approved by the Administrator,[2] but no claim for additional compensation for any such change or addition will be considered unless the Seller shall have made a written request therefor to the Purchaser prior to the commencement of work in connection with such change or addition.

Section 3. Taxes. The prices herein set forth do not include any sums which are or may be payable by the Seller or the Purchaser on account of taxes imposed by any taxing authority upon the sale, purchase or use of the Equipment or labor of installation. If any such tax is applicable, the amount thereof shall be stated separately and added to the Proposal price and paid by the Purchaser.

Article II—Delivery and Installation

Section 1. Time of Completion. The time of delivery of the Equipment and of completion of the work is of the essence of this Contract. The seller will deliver the Equipment within the number of calendar days specified in Article I, Section 1, after the Administrator shall have approved this contract in writing and will prosecute diligently and complete the work within the number of calendar days specified in Article I, Section 1, after such approval. The time for such delivery and completion shall be extended for the period of any reasonable delay due exclusively to causes beyond the control and without the fault of the Seller, including, but not limited to, acts of God, fires, strikes, floods, changes in the Specifications as herein provided, and acts or omissions of the Purchaser with respect to matters for which the Purchaser is solely responsible; provided, however, that no delay in such time for delivery or completion of the work or in the progress of the work shall result in any liability on the part of the Purchaser, and provided further that any claim for extension of time shall be adjusted at the time any such delay occurs or any such change is made.

Section 2. Supervision and Inspection. The Seller will give adequate supervision to the work. He will carefully study and compare all drawings, specifications, and other instructions and will at once report to the Purchaser any error, inconsistency or omission which he may discover. The Seller will keep on his work during its progress a competent superintendent and any necessary assistants, all satisfactory to the Purchaser. The Superintendent shall represent the Seller in his absence and all directions given to him shall be as binding as if given to the Seller. When requested, such directions shall be confirmed in writing.

Section 3. The Purchaser will make available during installation a competent representative to coordinate installation activities with the Seller.

Section 4. Alignment, Inspection and Tests. The Seller shall adjust and align the Equipment to perform in accordance with the Specifications and furnish in writing to the Purchaser data to show the state of adjustment of the Equipment. Immediately upon completion of the installation and alignment of the Equipment the Seller shall provide the necessary test equipment and perform the inspections and tests specified in the Specifications under the direct supervision of the Purchaser or its Engineer. A competent representative of the Purchaser or his Engineer will be available to supervise and witness these tests immediately upon completion of installation and alignment by the Seller and to determine for the purchaser that the performance of the equipment meets the Specifications. Such determination, however, shall not preclude subsequent rejection pursuant to Section 7 of this Article II. The Seller shall furnish in writing to the Purchaser the results of all tests. All Equipment furnished hereunder shall be subject to the inspection, tests, and approval of the Purchaser and the Administrator. The Purchaser and the Administrator shall have the right to inspect all records of the Seller and of any subcontractor relevant to the installation work. The Seller shall provide all reasonable facilities necessary for such inspection and tests.

[1] As long as the total price of this contract including all amendments is less than 120 percent of the original contract price as stated in the acceptance hereto, amendments executed on RUS Form 238 are not subject to the approval of the Administrator. Whenever an amendment to this contract causes the total amended contract to exceed 120 percent of the original contract price, that amendment and all subsequent amendments to this contract shall be made subject to the approval of the Administrator.

[2] See Footnote 1.

Section 5. If as a result of the tests and measurements set forth in Section 4 above, the Performance Specifications of the Equipment cannot be met due to inaccuracies, or inadequacies in the system data provided in the Specifications, the Purchaser and Seller shall determine what corrective measures are necessary and whether these corrections shall be made by the Purchaser or the Seller.

If it is determined that the Seller shall make the corrections, the Purchaser will reimburse the Seller pursuant to a contract amendment, subject to the approval of the Administrator,[3] for such reasonable additional expenses for the corrections, realignment and retesting the Seller is required to perform pursuant to this amendment.

Where it is determined that the Purchaser will make the corrections, the Purchaser will reimburse the Seller pursuant to a contract amendment, subject to the approval of the Administrator,[4] for such reasonable additional expenses for realignment and retesting the Seller is required to perform pursuant to this amendment, including, if necessary, the added expense of returning to the project, where necessary, for reperforming alignment and testing.

Section 6. Employees. The Purchaser shall have the right to require the removal from the work of any employee of the Seller if in the judgment of the Purchaser such removal shall be necessary in order to protect the interest of the Purchaser.

Section 7. Defective Workmanship and Materials. Notwithstanding the acceptance of workmanship, materials or equipment or the giving of any certificate with respect to the Completion of the Work, if during performance hereunder or within one year after completion or within such longer period as the Equipment or any part thereof may be guaranteed by the Seller and Manufacturer, the workmanship, materials or equipment, except as may be otherwise provided in the Specifications, shall be found to be defective or not in conformity with the Specifications, the Seller shall remedy or replace at its expense such workmanship, materials or equipment within thirty (30) days after notice of the existence thereof shall have been given to the Seller by the Purchaser.

Article III—Payments and Releases of Liens

Section 1. Payment to Seller.

(a) The Purchaser shall pay the Seller upon the basis of estimates by the Seller recommended by the supervising engineer, if any, and approved by the Purchaser of the work completed, the following percentages of the price of the equipment for each location set forth in Article I, Section 1, as and if revised: 45% when 50% of the equipment for each location has been delivered at the site of the Project; 90% when all the equipment for each location has been delivered at the site of the Project.

(b) Upon completion of installation of the equipment for each location, the Purchaser shall pay the Seller 90% of the Total price for such location.

(c) Upon Completion of the Installation of the Equipment, but prior to the payment to the Seller of any amount in excess of ninety percent (90%) of the Total Contract Price, the supervising engineer, if any, of the Purchaser or the Purchaser shall inspect the work performed hereunder and if the work shall be found acceptable and all provisions hereunder fully performed, the supervising engineer, if any, of the Purchaser shall certify as to that fact and as to the amount of the balance found to be due to the Seller. Upon acceptance by the Purchaser, the Purchaser shall pay to the Seller all unpaid amounts to which the Seller shall be entitled hereunder; provided, however, such final payments shall be made not later than 120 days after completion of the work, unless such acceptance by the Purchaser shall be withheld because of the fault of the Seller.

Section 2. Release of Liens. Upon the Completion of the Installation of the Equipment by the Seller, but prior to the payment to the Seller of any amount in excess of ninety percent (90%) of the Total Contract Price, the Seller will deliver to the Purchaser, in duplicate, releases of all liens and of rights to claim any lien from manufacturers, materialmen and subcontractors who have furnished materials or services for the work and a certificate by the Seller in a form approved by the Administrator, to the effect that all labor has been paid and that all such releases have been submitted to the Purchaser for approval.

In lieu of releases of liens, and if the Administrator shall so approve, the Seller may deliver to the Purchaser, in duplicate, (1) a certificate, in a form approved by the Administrator, that all manufacturers, materialmen and subcontractors who have furnished materials or services for the Project have been paid in full, and (2) an agreement to hold the Purchaser harmless against any liens arising out of the Seller's performance hereunder which may have been or may be filed against the Purchaser.

Article IV—Particular Undertakings of the Seller

Section 1. Protection to Persons and Property. At all times when Equipment is being delivered and installed the Seller will exercise reasonable precautions for the safety of employees on the work and of the public, and will comply with all applicable provisions of Federal, State and Municipal safety laws and building and construction codes. All machine and equipment and other physical hazards

[3] See Footnote 1.

[4] See Footnote 1.

shall be guarded in accordance with the ''Manual of Accident Prevention in Construction'' of the Associated General Contractors of America, unless such instructions are incompatible with Federal, State, or Municipal laws or regulations.

The following provisions shall not limit the generality of the above requirements:

(a) The Seller will at all times keep the premises free from accumulations of waste material or rubbish caused by his employees or work, and at the completion of the work he will remove all rubbish and all his tools, scaffolding and surplus materials and will leave his work ''broom clean.''

(b) The Seller will perform work in such manner as to maximize preservation of aesthetics and conservation of natural resources, and minimize marring and scarring of the landscape and silting of streams. There will be no depositing of trash in streams or waterways. Herbicides, other chemicals or their containers will not be deposited in or near streams, waterways or pastures. The Seller will follow, under the general direction of the Purchaser, the criteria relating to environmental protection as specified herein by the Purchaser.

(c) The work, from its commencement to completion, or to such earlier date or dates when the Purchaser may take possession and control, shall be under the charge and control of the Seller and during such period of control by the Seller all risks in connection therewith and the materials to be used therein, whether owned by the Seller or Purchaser, shall be borne by the Seller. The Seller will make good and fully repair all injuries and damages to the work or any portion thereof under the control of the Seller by reasons of any act of God, or any other casualty or cause whether or not the same shall have occurred by reason of the Seller's negligence.

(i) To the maximum extent permitted by law, Seller shall defend, indemnify, and hold harmless Purchaser and Purchaser's directors, officers, and employees from all claims, causes of action, losses, liabilities, and expenses (including reasonable attorney's fees) for personal loss, injury, or death to persons (including but not limited to Seller's employees) and loss, damage to or destruction of Purchaser's property or the property of any other person or entity (including but not limited to Seller's property) in any manner arising out of or connected with the Contract, or the materials or equipment supplied or services performed by Seller, its subcontractors and suppliers of any tier. But nothing herein shall be construed as making Seller liable for any injury, death, loss, damage, or destruction caused by the sole negligence of Purchaser.

(ii) To the maximum extent permitted by law, Seller shall defend, indemnify, and hold harmless Purchaser and Purchaser's directors, officers, and employees from all liens and claims filed or asserted against Purchaser, its directors, officers, and employees, or Purchaser's property or facilities, for services performed or materials or equipment furnished by Seller, its subcontractors and suppliers of any tier, and from all losses, demands, and causes of action arising out of any such lien or claim. Seller shall promptly discharge or remove any such lien or claim by bonding, payment, or otherwise and shall notify Purchaser promptly when it has done so. If Seller does not cause such lien or claim to be discharged or released by payment, bonding, or otherwise, Purchaser shall have the right (but shall not be obligated) to pay all sums necessary to obtain any such discharge or release and to deduct all amounts so paid from the amount due Seller.

(iii) Seller shall provide to Purchaser's satisfaction evidence of Seller's ability to comply with the indemnification provisions of subparagraphs i and ii above, which evidence may include but may not be limited to a bond or liability insurance policy obtained for this purpose through a licensed surety or insurance company.

(d) Monthly reports of all accidents will be promptly submitted by the Seller, giving such data as may be prescribed by the Purchaser.

Section 2. Delivery of Possession and Control to Purchaser. Upon written request of the Purchaser, the Seller shall deliver to the Purchaser full possession and control of any completed location included in the work, provided the Seller shall have been paid at least 90% of such Total Location Price. Upon such delivery of the possession and control of any such location to the Purchaser, the risks and obligations of the Seller, as set forth in Article IV, Section 1(b) hereof, with respect to such location shall be terminated; provided however, that nothing herein contained shall relieve the Seller of any liability with respect to defective workmanship or materials as specified in Article II, Section 7, hereof.

Section 3. Insurance. The Seller shall take out and maintain throughout the contract period insurance of the following types and minimum amounts:

(a) Workers' compensation and employers' liability insurance, as required by law, covering all their employees who perform any of the obligations of the contractor, engineer, and architect under the contract. If any employer or employee is not subject to the workers' compensation laws of the governing state, then insurance shall be obtained voluntarily to extend to the employer and employee coverage to the same extent as though the employer or employee were subject to the workers' compensation laws.

(b) Public liability insurance covering all operations under the contract shall have limits for bodily injury or death of not less

than $1 million each occurrence, limits for property damage of not less than $1 million each occurrence, and $1 million aggregate for accidents during the policy period. A single limit of $1 million of bodily injury and property damage is acceptable. This required insurance may be in a policy or policies of insurance, primary and excess including the umbrella or catastrophe form.

(c) Automobile liability insurance on all motor vehicles used in connection with the contract, whether owned, nonowned, or hired, shall have limits for bodily injury or death of not less than $1 million per person and $1 million per occurrence, and property damage limits of $1 million for each occurrence. This required insurance may be in a policy or policies of insurance, primary and excess including the umbrella or catastrophe form.

The Purchaser shall have the right at any time to require public liability insurance and property damage liability insurance greater than those required in subsection ''b'' and ''c'' of this Section. In any such event, the additional premium or premiums payable solely as the result of such additional insurance shall be added to the Contract price.

The Purchaser shall be named as Additional Insured on all policies of insurance required in subsections ''b'' and ''c'' of this Section.

The policies of insurance shall be in such form and issued by such insurer as shall be satisfactory to the Purchaser. The Seller shall furnish the Purchaser a certificate evidencing compliance with the foregoing requirements which shall provide not less than (30) days prior written notice to the Purchaser of any cancellation or material change in the insurance.

Section 4. Purchase of Materials. The Seller shall purchase all materials and supplies outright and not subject to any conditional sales agreements, bailment lease or other agreement reserving unto the Seller any right, title or interest therein. Materials and Supplies shall become the property of the Purchaser as the Purchaser makes payments therefor to the Seller in accordance with Article III, Section 1(a). Unless otherwise specified, all materials shall be new.

Section 5. Assignment of Guarantees. All guaranties of materials and workmanship running in favor of the Seller shall be transferred and assigned to the Purchaser on completion of the work and at such time as the Seller receives final payment.

Section 6. Patent Infringement. The Seller shall hold harmless and indemnify the Purchaser from any and all claims, suits, and proceedings for the infringement of any patent or patents covering any, equipment, materials, supplies, or installation methods used in the work. The Seller shall, at its own cost (and Purchaser agrees to permit Seller to do so) defend any suits which may be instituted by any, party against the Seller for alleged infringement of patents relating to the Seller's performance hereunder.

Section 7. Compliance with Statutes and Regulations. The Seller shall comply with all applicable statutes, ordinances, rules and regulations pertaining to the work. The Seller acknowledges that it is familiar with the Rural Electrification Act of 1936, as amended, the so-called ''Kick-Back'' Statutes (48 Stat. 948), and all regulations issued pursuant thereto, and 18 U.S.C. §§ 287,1001 as amended and the Seller agrees to comply with the provisions of all of such statutes and regulations.

Article V—Remedies

Section 1. Completion on Seller's Default. If default shall be made by the Seller or by any subcontractor in the performance of any of the work hereunder, the Purchaser, without in any manner limiting its legal and equitable remedies in the circumstances, may serve upon the Seller and the surety or sureties upon the Seller's Bond or Bonds, if any, a written notice requiring the Seller to cause such default to be corrected forthwith. Unless within twenty (20) days after the service of such notice upon the Seller such default shall be corrected or arrangements for the correction thereof, satisfactory to both the Purchaser and the Administrator, shall be made by the Seller or its surety or sureties, the Purchaser may take over the performance of the Seller's obligations hereunder and prosecute the same to completion by contract or otherwise for the account and at the expense of the Seller, and the Seller and its surely or sureties shall be liable to the Purchaser for any cost or expense in excess of the contract price occasioned thereby. In such event, the purchaser may take possession of and utilize, in completing the work, any tools, supplies, equipment, appliances and plant belonging to the Seller which may be situated at the site of the installation work. The Purchaser, in such contingency, may exercise any rights, claims or demands which the Seller may have against third persons in connection herewith and for such purpose the Seller does hereby assign, transfer and set over unto the Purchaser all such rights, claims and demands.

Section 2. Enforcement of Remedies by Administrator. The Administrator may on behalf of the Purchaser exercise any right or enforce any remedy which the Purchaser may exercise or enforce hereunder.

Section 3. Cumulative Remedies. Every right or remedy herein conferred upon or reserved to the Purchaser or the Administrator shall be cumulative and shall be in addition to every right and remedy now or hereafter existing at law or in equity or by statute and the pursuit of any right or remedy shall not be construed as an election.

Article VI—Miscellaneous

Section 1. Definitions. (a) The contract documents shall consist of the Proposal and Acceptance, the Contractor's Bond and the Specifications.

(b) The term ''Completion of Installation'' shall mean full performance by the Seller of the Seller's obligations under the Contract and all amendments and revisions thereof, except that it shall not include the final acceptance tests nor performance of the Seller's obligations in respect of (i) releases of liens and Certificate of Seller under Article III, Section 2 hereof, (ii) other final documents. The term ''Completion of the Work'' shall mean full performance by the Seller of the Seller's obligations under the Contract and all amendments and revisions thereof. The Certificate of Completion signed by the supervising engineer and approved by the Purchaser or signed by the Purchaser, if the Purchaser shall not employ an Engineer, and approved in writing by the Administrator within a reasonable time after completion shall be conclusive evidence as to the fact of completion and the date thereof.

Section 2. Materials and Supplies. In the performance of this contract there shall be furnished only such unmanufactured articles, materials, and supplies as have been mined or produced in the United States, Mexico, or Canada, and only such manufactured articles, materials, and supplies as have been manufactured in the United States substantially all from articles, materials, or supplies mined, produced or manufactured, as the case may be, in the United States, Mexico, or Canada; provided that other articles, materials, or supplies may be used in the event and to the extent that the Administrator shall expressly in writing authorize such use pursuant to the provisions of the Rural Electrification Act of 1938, being Title IV of Public Resolution No. 122, 75th Congress, approved June 21, 1938. The Seller agrees to submit to the Purchaser such certificates with respect to compliance with the foregoing provision as the Administrator from time to time may require.

Section 3. Equal Opportunity Provisions. (a) Seller's Representations.

The Seller represents that:

It has ____, does not have ____, 100 or more employees, and if it has, that it has ____, has not ____, furnished the Equal Employment Opportunity—Employers Information Report EEO–1, Standard Form 100, required of employers with 100 or more employees pursuant to Executive Order 11246 and Title VII of the Civil Rights Act of 1964.

The Seller agrees that it will obtain, prior to the award of any subcontract for more than $10,000 hereunder to a subcontractor with 100 or more employees, a statement, signed by the proposed subcontractor, that the proposed subcontractor has filed a current report on Standard Form 100.

The Seller agrees that if it has 100 or more employees and has not submitted a report on Standard Form 100 for the current reporting year and that if this Contract will amount to more than $10,000 the Seller will file such report, as required by law, and notify the Purchaser in writing of such filing prior to the Purchaser's acceptance of this Proposal.

(b) Equal Opportunity Clause. During the performance of this Contract, the Seller agrees as follows:

(1) The Seller will not discriminate against any employee or applicant for employment because of race, color, religion, sex or national origin. The Seller will take affirmative action to ensure that applicants are employed, and that employees are treated during employment without regard to their race, color, religion, sex or national origin. Such action shall include, but not be limited, to the following: Employment, upgrading, demotion or transfer; recruitment or recruitment advertising; layoff or termination, rates of pay or other forms of compensation; and selection for training, including apprenticeship. The Seller agrees to post in conspicuous places, available to employees and applicants for employment, notices to be provided setting forth the provisions of this Equal Opportunity Clause.

(2) The Seller will, in all solicitations or advertisements for employees placed by or on behalf of the Seller, state that all qualified applicants will receive consideration for employment without regard to race, color, religion, sex or national origin.

(3) The Seller will send to each labor union or representative of workers, with which it has a collective bargaining agreement or other contract or understanding, a notice to be provided advising the said labor union or workers' representative of the Seller's commitments under this section, and shall post copies of the notice in conspicuous places available to employees and applicants for employment.

(4) The Seller will comply with all provisions of Executive Order 11246 of September 24, 1965, and of the rules, regulations, and relevant orders of the Secretary of Labor.

(5) The Seller will furnish all information and reports required by Executive Order 11246 of September 21, 1965, and by rules, regulations, and orders of the Secretary of Labor, or pursuant thereto, and will permit access to its books, records, and accounts by the administering agency and the Secretary of Labor for purposes of investigation to ascertain compliance with such rules, regulations, and orders.

(6) In the event of the Seller's noncompliance with the Equal Opportunity Clause of this Contract or with any of the said rules, regulations or orders, this Contract may be cancelled, terminated or suspended in whole

or in part, and the Seller may be declared ineligible for further Government contracts or federally-assisted construction contracts in accordance with procedures authorized in Executive Order 11246 of September 24, 1965, and such other sanctions may be imposed and remedies invoked as provided in Executive Order 11246 of September 24, 1965, or by rule, regulation or order of the Secretary of Labor, or as otherwise provided by law.

(7) The Seller will include this Equal Opportunity Clause in every subcontract or purchase order unless exempted by the rules, regulations, or orders of the Secretary of Labor issued pursuant to Section 204 of Executive Order 11246 of September 24, 1965, so that such provisions will be binding upon each subcontractor or vendor. The Seller will take such action with respect to any subcontract or purchase order as the administering agency may direct as a means of enforcing such provisions, including sanctions for noncompliance: Provided, however, That in the event a Seller becomes involved in, or is threatened with, litigation with a subcontractor or vendor as a result of such direction by the administering agency, the Seller may request the United States to enter into such litigation to protect the interests of the United States.

(c) Certificate of Nonsegregated Facilities. The Seller certifies that it does not maintain or provide for its employees any segregated facilities at any of its establishments, and that it does not permit its employees to perform their services at any location, under its control, where segregated facilities are maintained. The Seller certifies further that it will not maintain or provide for its employees any segregated facilities at any of its establishments, and that it will not permit its employees to perform their services at any location, under its control, where segregated facilities are maintained. The Seller agrees that a breach of this certification is a violation of the Equal Opportunity Clause in this Contract. As used in this certification, the term ''segregated facilities'' means any waiting room, work areas, restrooms and washrooms, restaurants and other eating areas, timeclocks, locker rooms and other storage or dressing areas, parking lots, drinking fountains, recreation or entertainment areas, transportation, and housing facilities provided for employees which are segregated by explicit directive or are in fact segregated on the basis of race, color, religion, or national origin, because of habit, local custom, or otherwise. The Seller agrees that (except where it has obtained identical certificates from proposed subcontractors for specific time periods) it will obtain identical certifications from proposed subcontractors prior to the award of subcontracts exceeding $10,000 which are not exempt from the provisions of the Equal Opportunity Clause, and that it will retain such certifications in its files.

Section 4. Bond. The Seller will furnish to the Purchaser, for a contract in excess of $100,000 a bond in a penal sum not less than the Proposal price and in the form attached hereto and with a Surety or Sureties listed by the United States Treasury Department as acceptable Sureties.

Section 5. License. The Seller shall comply with all applicable construction codes.

(a) The Seller warrants that he possesses contractor's license number ____ issued to him by the State of ____ in which the work is located, and said license expires on ____, 19____.

(b) The Seller warrants that no license is required in the State in which the work is located.

(Cross out that subsection which does not apply.)

Section 6. Nonassignment of Contract. The Seller will not assign the Contract effected by acceptance of this Proposal, or any part thereof, or enter into any contract with any person, firm or corporation, for the performance of the Seller's obligations hereunder or any part hereof, without the approval in writing of the Purchaser and the Surety or Sureties on the Contractor's Bond or Bonds, if any; provided, however, the Seller may subcontract the whole or any part of the installation work to be performed at the installation site (as distinguished from furnishing and delivery of equipment and materials). If the Seller, with the consent of the Purchaser and the Surety or Sureties on the Contractor's Bond or Bonds, if any, shall enter into any subcontract with any subcontractor for the Performance of any part of the installation work to be performed at the installation site, the Seller shall be as fully responsible to the Purchaser and the United States of America for the acts and omissions of such subcontractor and of persons employed by such subcontractor as the Seller would be for its own acts and omissions and those of persons directly employed by it.

Section 7. Approval of the Administrator. The acceptance of this Proposal by the Purchaser shall not create a contract unless such acceptance shall be approved in writing by the Administrator within ninety (90) days after the date of the Proposal.

_____ Seller

By _____

_____ Title

Date of Proposal _____

(If executed by one other than President, Vice-President, a partner or the individual owner, a power of attorney authorizing execution should accompany this proposal.)

Acceptance

Subject to the approval of the Administrator, the Purchaser hereby accepts the Proposal of _____ (Dated _____) for the Equipment herein described for the Total Base Price of $_____ and the following options for:

Spare Parts $_____
Maintenance Tools $_____
Test Equipment $_____
Other Options: (Describe) $_____
Total Contract Price $_____
_____ Purchaser
By _____ President
Attest _____ Secretary
Date of Acceptance _____

[End of clause]

§1726.342 Distribution line extension construction contract (labor and materials), RUS Form 790.

The contract form in this section shall be used when required by this part.

DISTRIBUTION LINE EXTENSION CONSTRUCTION CONTRACT (LABOR AND MATERIALS)

Proposal

To: _____ (hereinafter called the ''Owner'').

Article I—General

Section 1—Offer to Construct. The undersigned (hereinafter called the ''Contractor'') hereby proposes to furnish labor, materials, and equipment for, and construct for the prices hereinafter stated, the rural electric project ____—19____ Line Extensions (hereinafter called ''Project'') in strict accordance with the Plans, Specifications, and Construction Drawings hereinafter referred to. The Contractor understands and agrees that the Project will consist of line extensions and additions and line changes or similar work usually associated with overhead or underground distribution system improvement or extension work all located within the area served or ultimately to be served by the Owner and that the exact location and scope of individual sections of the Project (hereinafter called ''Sections'') will be made known to the Contractor from time to time as provided in Article II, Section 1 hereof; and provided, however, that the Contractor shall not be obligated to start construction of any Section unless the cost of construction of the Section computed on the unit prices of this Proposal shall amount to at least ____ dollars ($____) and provided further that the Owner shall be obligated to release to the Contractor for construction at least one Section pursuant to the provisions of this Proposal.

Section 2—Additional Projects. From time to time the owner and the Contractor may enter into negotiations for the performance of work at prices which may differ from those in the Proposal (such work being hereinafter called ''Additional Projects''). Except as may otherwise be agreed upon in writing by the Owner and the Contractor at the time the supplemental contract for the Additional Project is negotiated, the provisions of the Contract for the Project shall apply.

Section 3—Proposal on Unit Basis. The Contractor understands and agrees that the various Construction Units considered in this Proposal are defined by symbols and descriptions in this Proposal, that the Proposal is made on a unit basis, and that the Owner may specify, as provided in Article II, Section 1 hereof, any number or combination of Construction Units which the Owner, may deem necessary for the construction of the Project. If kinds of Construction Units for which prices are not established in this Proposal are necessary for the construction of the Project, the prices of such additional Units shall be as agreed upon in writing by the Owner and the Contractor prior to the time of installation. The unit labor prices herein set forth are applicable to work performed on unenergized lines. Such unit labor prices shall be increased by ____ (____) percent for all units installed on energized lines in accordance with instructions of the Owner, as provided in Article II, Section 1g.

Section 4—Description of Contract. The Specifications and Construction Drawings set forth in: RUS Form 804, Specifications and Drawings for 7.2/12.5 kV Line Construction; RUS Form 803, Specifications and Drawings for 14.4/24.9 kV Line Construction; RUS Form 806, Specifications and Drawings for Underground Electric Distribution; as applicable, which by this reference are incorporated herein, together with the Plans, Proposal and Acceptance constitute the Contract. The Plans, consisting of maps and special drawings, and approved modifications in standard specifications are attached hereto and identified as follows: _____.

Section 5—Familiarity with Conditions. The Contractor acknowledges that it has made a careful examination of the site of the Project and of the Plans, Specifications and Construction Drawings, and has become informed as to the location and nature of the proposed construction, the transportation facilities, the kind and character of soil and terrain to be encountered, the kind of equipment, tools, and other facilities required before and during the construction of the Project and has become acquainted with the availability status of materials and with the labor conditions which would effect work on the Project.

Section 6—License. The Contractor warrants that a Contractor's license is ____ is not ____ required, and if required, it possesses Contractor's License No. ____ for the

State of ___ in which the Project is located, and said license expires on ___, 19___.

Section 7—Contractor's Resources. The Contractor warrants that it possesses adequate financial resources for the performance of the work covered by this Proposal and that it will provide necessary tools and equipment and a qualified superintendent and other employees.

Section 8—Changes in Construction. The Contractor agrees to make such changes in construction previously installed in the Project by the Contractor as required by the Owner on the following basis: The cost of labor shall be the reasonable cost thereof as agreed upon by the Contractor and the Owner but in no event shall it exceed two (2) times the labor price quoted in the Proposal for the installation of the unit to be changed. Such compensation shall be in lieu of any other payment for the installation and removal of the original unit but shall not include the cost of the installation, if any, of a new or replacing unit, payment for which shall be made at the unit price as quoted in the Proposal.

No payment shall be made to the contractor for correcting errors or omissions on the part of the Contractor which result in construction not in accordance with the Plans and Specifications.

Section 9—Materials and Equipment. The Contractor agrees to furnish and use in the construction of the Project under this Proposal, only such materials and equipment as are included on the current ''List of Materials Acceptable for Use on Systems of RUS Electrification Borrowers,'' including revisions adopted prior to construction.

The Contractor further agrees to furnish and use guy wire with ASTM Class ___ (Owner to insert A or B) zinc coating.

All leads on equipment such as transformers, reclosers, etc., shall be of #6 minimum copper conductivity using ___ (Owner to insert stranded soft drawn copper or aluminum alloy) conductor. All conductor ties on insulators shall be of the materials and methods shown in the following Type Guide Drawings: ___ (Owner to insert appropriate drawing numbers.)

Ground rods and butt-type grounding plates shall be ___.(Owner to insert galvanized steel or copper.)

Underground primary cables shall have ___ coated copper neutral (Owner to insert round or flat.)

The Contractor further agrees to furnish poles, crossarms, and other timber products, of which the physical characteristics, method of treatment, type of preservative, instructions on inspection and general procedure shall be in accordance with RUS standards and requirements.

Crossarms shall be ___ (Owner to insert Douglas Fir or Southern Yellow Pine), treated with ___ (Owner to insert type of preservative.)

The Contractor agrees that the prices for poles, crossarms, and other timber products set forth herein shall include the cost of preservative treatment and inspection or insured warranty. The Contractor further agrees to obtain from the supplier inspection and treatment reports or insured warranties, for checking against the delivery timber, and to submit such reports or warranties to the Owner as one of the prerequisites to monthly and final payments.

Section 10—Owner-Furnished Materials. a. The Contractor understands and agrees that the Owner may, with approval of the Contractor, furnish to the Contractor some of the materials and equipment required for construction of the Project, (hereinafter called ''Owner-Furnished Materials''). The quantity, type, and value of Owner-Furnished Materials for each Section shall be as agreed upon by the Contractor and Owner prior to the start of construction of each Section of the Project. The Owner shall make such materials and equipment available to the Contractor as provided in Article II, Section 1, b, and the Contractor will give to the Owner a receipt in such form as the Owner shall approve.

b. The value of the completed Construction Units certified to by the Contractor each month pursuant to Article III, Section 1, a, of this Proposal shall be reduced by an amount equal to the value of the Owner-Furnished Materials installed by the Contractor during the preceding month. Only ninety percent (90%) of the remainder shall be paid prior to the Completion of the Section. Owner-Furnished Materials, if any, not required for the Section, shall be returned to the Owner by the Contractor upon Completion of Construction of the Section. The value of all Owner-Furnished Materials not installed in the Section of the Project or returned to the Owner shall be deducted from the final payment to the Contractor for the Section.

Section 11—References to Materials. The references in this Proposal to ''Materials'', except in Article IV, Section 1.f, shall be understood to mean only materials to be furnished by the Contractor.

Section 12—Taxes. The unit prices for Construction Units in this Proposal include provisions for the payment of all monies which will be payable by the Contractor or the Owner in connection with construction of the Project on account of taxes imposed by any taxing authority upon the sale, purchase or use of materials, supplies or equipment to be incorporated in the Project as part of such Construction Units. The Contractor agrees to pay all such taxes except on Owner-Furnished Materials and it is understood that, as to Owner-Furnished Materials, the values as agreed to by the Owner and

Contractor for such materials include such taxes, if applicable. The Contractor will furnish to the appropriate taxing authorities all required information and reports pertaining to materials used on construction of the Project except as to Owner-Furnished Materials.

Article II—Construction

Section 1—Time and Manner of Work. The Contractor agrees to be prepared to commence the construction of the Project within fifteen (15) calendar days after written notice by the Owner of the acceptance of the Proposal. The Contractor agrees to commence construction of a Section within ____ (____) days after receipt in writing from the Owner of the following:

a. Location and number of the various Construction Units required for construction of the Section (hereinafter called the ''Staking Sheets'').

b. Itemized list including appropriate Unit prices, of the Owner-Furnished Materials to be used in the construction of the Section and an authorization by the Owner for the Contractor to obtain such materials from the Owner's warehouse located at ____.

c. A schedule showing the rate at which construction of the Section shall proceed and the total number of calendar days (excluding Sundays) to be allowed for completion; provided, however, that the required completion time for any Section shall not be less than ____ (____) days or ____ (____) days per mile of line, whichever is the greater, which days shall be calendar days (excluding Sundays). The time of the completion of the Section is of the essence of the contract to be effected by acceptance of this Proposal.

d. A statement that all required easements and rights-of-way have been obtained from the owners of the properties across which the Section is to be constructed (including tenants who may reasonably be expected to object to such construction).

e. A statement that all necessary staking has been completed.

f. A statement that all necessary funds for prompt payment for the construction of the Section will be available.

g. Specific instruction as to location and extent of work to be performed on energized lines, if any. The Contractor will not be required to dig holes, set poles, install anchors, install underground conduit, perform any plowing for the installation of underground cable, or dig trenches if there are more than six (6) inches of frost in the ground nor to perform any construction on such days when in the judgment of the Owner snow, rain, or wind, or the results of snow, rain, or frost make it impracticable to perform any operation of construction; provided further that the Contractor will not perform any plowing for the installation of underground cable on public roads or highways if there are more than two (2) inches of frost in the ground. To the extent of the time lost due to the conditions described herein and approved in writing by the Owner, the time of completion set out above will be extended. The time for completion shall be extended for a period of any reasonable delay (other than a delay resulting from the failure of the Contractor to secure sufficient labor) which is due exclusively to causes beyond the control and without the fault of the Contractor including acts of God, fires, floods, inability to obtain materials, direction of the Owner to cease construction as herein provided, and acts or omissions of the Owner with respect to matters for which the Owner is solely responsible; Provided, however, that no such extension of time for completion shall be granted the Contractor unless within ten (10) days after the happening of any event relied upon by the Contractor for such an extension of time the Contractor shall have made a request therefor in writing to the Owner, and provided further that no delay in such time of completion or in the progress of the work which results from any of the above causes except acts or omissions of the Owner, shall result in any liability on the part of the Owner.

Section 2—Changes in Plans, Specifications and Drawings. The Owner may, from time to time during the progress of the construction of the Project, make such changes in, additions to, or subtractions from the Plans, Specifications, and Construction Drawings as conditions may warrant: Provided, however, that if the cost to the Contractor shall be materially increased by any such change or addition, the Owner shall pay the Contractor for the reasonable cost thereof in accordance with a construction contract amendment signed by the Owner and the Contractor, but no claim for additional compensation for any such change or addition will be considered unless the Contractor shall have made a written request therefor to the Owner prior to the commencement of work in connection with such change or addition.

Section 3—Supervision and Inspection. a. The Contractor shall cause the construction work on the Project to receive constant supervision by a competent superintendent (hereinafter called the ''Superintendent'') who shall be present at all times during working hours where construction is being carried on. The Contractor shall also employ, in connection with the construction of the Project, capable, experienced, and reliable foremen and such skilled workmen as may be required for the various classes of work to be performed. Directions and instructions given to the Superintendent by the Owner shall be binding upon the Contractor.

b. The Owner reserves the right to require the removal from the Project of any employee of the Contractor if in the judgment of the Owner such removal shall be necessary in order to protect the interest of the Owner. The Owner shall have the right to require the Contractor to increase the number of his employees and to increase or change the amount or kinds of tools and equipment if at any time the progress of the work shall be unsatisfactory to the Owner; but the failure of the Owner to give any such directions shall not relieve the Contractor of his obligations to complete the work within the time and in the manner specified in this Proposal.

c. The manner of construction of the Project and all materials and equipment used therein, shall be subject to the inspection, tests, and approval of the Owner. The Owner shall have the right to inspect all payrolls and other data and records of the Contractor relevant to the work. The Contractor will provide all reasonable facilities necessary for such inspection and tests. The Contractor shall have an authorized agent accompany the inspector when final inspection is made and, if requested by the Owner, when any other inspection is made.

d. In the event that the Owner shall determine that the construction contains or may contain numerous defects, it shall be the duty of the Contractor, if requested by the Owner, to have an inspection made by an engineer approved by the Owner for the purpose of determining the exact nature, extent, and location of such defects.

Section 4—Defective Materials and Workmanship. a. The acceptance of any materials, equipment (except owner-furnished materials) or any workmanship by the Owner shall not preclude the subsequent rejection thereof if such materials, equipment, or workmanship shall be found to be defective after delivery or installation, and any such materials, equipment or workmanship found defective before final acceptance of the construction shall be replaced or remedied, as the case may be, by and at the expense of the Contractor. Any such condemned material or equipment shall be immediately removed from the site of the Project by the Contractor at the Contractor's expense. The Contractor shall not be entitled to any payment hereunder so long as any defective materials, equipment or workmanship in respect to the Project, of which the Contractor shall have had notice, shall not have been replaced or remedied, as the case may be.

b. Notwithstanding any certificate which may have been given by the Owner, if any materials, equipment (except owner-furnished materials) or any workmanship which does not comply with the requirements of this Contract shall be discovered within one (1) year after Completion of Construction of the Project, the Contractor shall replace such defective materials or equipment or remedy any such defective workmanship within thirty (30) days after notice in writing of the existence thereof shall have been given by the Owner. If the Contractor shall be called upon to replace any defective materials or equipment or to remedy defective workmanship as herein provided, the Owner, if so requested by the Contractor shall deenergize that section of the Project involved in such work. In the event of failure by the Contractor to do so, the Owner may replace such defective materials or equipment or remedy such defective workmanship, as the case may be, and in such event the Contractor shall pay to the Owner the cost and expense thereof.

Section 5—Materials Removed. The Contractor will return to the Owner or reuse in the construction of other assembly units all materials removed from the lines under Section H—Conversion Assembly Units and Section I—Removal Assembly Units. Upon completion of each Section of the Project the Contractor will return to the Owner all materials, including usable materials as well as scrap, furnished by the Owner in excess of those required for the construction of the Section as determined from the Final Inventory approved by the Owner. The Contractor will reimburse the Owner at the current invoice cost to the Owner for loss and for breakage through Contractor's negligence of materials furnished by the Owner to the Contractor and for materials removed from the lines by the Contractor.

Section 6—Term of Contract. It is understood and agreed that, notwithstanding any other provisions of this Contract, the Contractor will not be required to commence any construction after the expiration of one year ____, two years ____ following acceptance of this Proposal by the Owner.

Article III—Payment

Section 1—Payments to Contractor. a. Within the first fifteen (15), days of each calendar month, the Owner shall make partial payment to the Contractor for construction accomplished during the preceding calendar month on the basis of completed Construction Units furnished and certified to by the Contractor and approved by the Owner solely for the purpose of payment: Provided, however, that such approval by the Owner shall not be deemed approval of the workmanship or materials. Only ninety percent (90%) of each such estimate approved during the construction of a Section shall be paid by the Owner to the Contractor prior to completion of the Section. Upon completion by the Contractor of the construction of a Section, the Contractor will prepare a Final Inventory of the Section showing the total number and character of Construction Units and, will certify it to the Owner together with a certificate of the total cost of the construction

performed. Upon the approval of such certificates, the Owner shall make payment to the Contractor of all amounts to which the Contractor shall be entitled thereunder which shall not have been paid.

b. The Contractor shall be paid on the basis of the number of Construction Units actually installed at the direction of the Owner, as shown by the Inventory based on the Staking Sheets: Provided, however, that the total cost shall not exceed the maximum Contract price for the construction of the Project, unless such excess shall have been approved in writing by the Owner. It is understood and agreed that this maximum Contract price is ____ dollars ($____). It is also agreed that the Contractor shall not be entitled to any claim for damages on account of any reasonable additions to or subtractions from the Project, or of any delay occasioned thereby, or of any changes in the routing of the lines.

c. No payment shall be due while the Contractor is in default in respect of any of the provisions of this Contract and the Owner may withhold from the Contractor the amount of any claim by a third party against either the Contractor the Owner based upon an alleged failure of the Contractor to perform the work hereunder in accordance with the provisions of this Contract.

Section 2—Certificate of Contractor and Indemnity Agreement—Line Extensions. Upon the completion of Construction of any Section of the Project but prior to payment to the Contractor of any amount in excess of 90 percent (90%) of the total cost of all Construction Units comprising the completed Section, the Contractor shall deliver to the Owner in the form attached hereto, (1) a certificate that all persons who have furnished labor in connection with the Project and all manufacturers, materialmen, and subcontractors who have furnished materials or services for the Project have been paid in full, and (2) an agreement to hold the Owner harmless against any liens arising out of the Contractor's performance hereunder which may have been or may be filed against the Owner.

Article IV—Particular Undertakings of the Contractor

Section 1—Protection to Persons and Property. The Contractor shall at all times take all reasonable precautions for the safety of employees on the work and of the public, and shall comply with all applicable provisions of Federal, State, and Municipal safety laws and building and construction codes, as well as the safety rules and regulations of the Owner. All machinery and equipment and other physical hazards shall be guarded in accordance with the ''Manual of Accident Prevention in Construction'' of the Associated General Contractors of America unless such instructions are incompatible with Federal, State, or Municipal laws or regulations.

The following provisions shall not limit the generality of the above requirements:

a. The Contractor shall at no time and under no circumstances cause or permit any employee of the Contractor to perform any work upon energized lines, or upon poles carrying energized lines, unless otherwise specified in accordance with Article II, Section 1, subsection g.

b. The Contractor shall so conduct the construction of the Project as to cause the least possible obstruction of public highways.

c. The Contractor shall provide and maintain all such guard lights and other protection for the public as may be required by applicable statutes, ordinances, and regulations or by local conditions.

d. The Contractor shall do all things necessary or expedient to protect properly any and all parallel, converging, and intersecting lines, joint line poles, highways, and any and all property of others from damage, and in the event that any such parallel, converging and intersecting lines, joint line poles, highways, or other property are damaged in the course of the construction of the Project, the Contractor shall at its own expense restore any or all of such damaged property immediately to as good a state as before such damage occurred.

e. Where the right-of-way of the Project traverses cultivated lands, the Contractor shall limit the movement of his crews and equipment so as to cause as little damage as possible to crops, orchards, or property and shall endeavor to avoid marring the lands. All fences which are necessarily opened or moved during the construction of the Project shall be replaced in as good condition as they were found and precautions shall be taken to prevent the escape of livestock. Except as otherwise provided in the descriptions of underground plowing and trenching assembly units, the Contractor shall not be responsible for loss of or damage to crops, orchards, or property (other than livestock) on the right-of-way necessarily incident to the construction of the Project and not caused by negligence or inefficient operation of the Contractor. The Contractor shall be responsible for all other loss of or damage to crops, orchards, or property, whether on or off the right-of-way, and for all loss of or damage to livestock caused by the construction of the Project.

f. The Project, from the commencement of work to completion, or to such earlier date or dates when the Owner may take possession and control in whole or in part as hereinafter provided shall be under the charge and control of the Contractor and during such period of control by the Contractor all risks in connection with the construction of the Project and the materials to be used therein shall be borne by the Contractor.

The Contractor shall make good and fully repair all injuries and damages to the Project or any portion thereof under the control of the Contractor by reason of any Act of God or other casualty or cause whether or not the same shall have occurred by reason of the Contractor's negligence.

(i) To the maximum extent permitted by law, Contractor shall defend, indemnify, and hold harmless Owner and Owner's directors, officers, and employees from all claims, causes of action, losses, liabilities, and expenses (including reasonable attorney's fees) for personal loss, injury, or death to persons (including but not limited to Contractor's employees) and loss, damage to or destruction of Owner's property or the property of any other person or entity (including but not limited to Contractor's property) in any manner arising out of or connected with the Contract, or the materials or equipment supplied or services performed by Contractor, its subcontractors and suppliers of any tier. But nothing herein shall be construed as making Contractor liable for any injury, death, loss, damage, or destruction caused by the sole negligence of Owner.

(ii) To the maximum extent permitted by law, Contractor shall defend, indemnify, and hold harmless Owner and Owner's directors, officers, and employees from all liens and claims filed or asserted against Owner, its directors, officers, and employees, or Owner's property or facilities, for services performed or materials or equipment furnished by Contractor, its subcontractors and suppliers of any tier, and from all losses, demands, and causes of action arising out of any such lien or claim. Contractor shall promptly discharge or remove any such lien or claim by bonding, payment, or otherwise and shall notify Owner promptly when it has done so. If Contractor does not cause such lien or claim to be discharged or released by payment, bonding, or otherwise, Owner shall have the right (but shall not be obligated) to pay all sums necessary to obtain any such discharge or release and to deduct all amounts so paid from the amount due Contractor.

(iii) Contractor shall provide to Owner's satisfaction evidence of Contractor's ability to comply with the indemnification provisions of subparagraphs i and ii above, which evidence may include but may not be limited to a bond or liability insurance policy obtained for this purpose through a licensed surety or insurance company.

g. Any and all excess earth, rock, debris, underbrush, and other useless material shall be removed by the Contractor from the site of the Project as rapidly as practicable as the work progresses.

h. Upon violation by the Contractor of any provisions of this section, after written notice of such violation given to the Contractor by the Owner, the Contractor shall immediately correct such violation. Upon failure of the Contractor to do so the Owner may correct such violation at the Contractor's expense.

i. The Contractor shall submit to the Owner monthly reports in duplicate of all accidents, giving such data as may be prescribed by the Owner.

j. The Contractor shall not proceed with the cutting of trees or clearing of right-of-way without written notification from the Owner that proper authorization has been received from the owner of the property, and the Contractor shall promptly notify the Owner whenever any landowner objects to the trimming or felling of any trees or the performance of any other work on his land in connection with the Project and shall obtain the consent in writing of the Owner before proceeding in any such case.

Section 2—Insurance. The Bidder shall take out and maintain throughout the period of this Agreement the following types and minimum amounts of insurance:

a. Workers' compensation and employer's liability insurance, as required by law, covering all their employees who perform any of the obligations of the contractor, engineer, and architect under the contract. If any employee or employee is not subject to workers' compensation laws of the governing state, then insurance shall be obtained voluntarily to extend to the employer and employee coverage to the same extent as though the employer or employee were subject to the workers' compensation laws.

b. Public liability insurance covering all operations under the contract shall have limits for bodily injury or death of not less than $1 million each occurrence, limits for property damage of not less than $1 million each occurrence, and $1 million aggregate for accidents during the policy period. A single limit of $1 million of bodily injury and property damage is acceptable. This required insurance may be in a policy or policies of insurance, primary and excess including the umbrella or catastrophe form.

c. Automobile liability insurance on all motor vehicles used in connection with the contract, whether owned, nonowned, or hired, shall have limits for bodily injury or death of not less than $1 million each occurrence, and property damage limits of $1 million for each occurrence. This required insurance may be in a policy of policies of insurance, primary and excess including the umbrella or catastrophe form. The Owner shall have the right at any time to require public liability insurance and property damage liability insurance greater than those required in subsection ''b'' and ''c'' of this Section. In any such event, the additional premium or premiums payable solely as the result of such additional insurance shall be added to the Contract price.

The Owner shall be named as Additional Insured on all policies of insurance required in subsections ''b'' and ''c'' of this Section.

The policies of insurance shall be in such form and issued by such insurer as shall be satisfactory to the Owner. The Bidder shall furnish the Owner a certificate evidencing compliance with the foregoing requirements which shall provide not less than (30) days prior written notice to the Owner of any cancellation or material change in the insurance.

Section 3—Bond. If the estimated cost of the construction of a Section shall exceed $100,000, the Contractor agrees to furnish prior to the commencement of such construction, a bond in the penal sum not less than the estimated cost of such section in the form attached hereto with a Surety or Sureties listed by the United States Treasury Department as acceptable sureties. In the event that the Surety or Sureties on the performance bond delivered to the Owner shall at any time become unsatisfactory to the Owner, the Contractor agrees to deliver to the Owner another or an additional bond.

Section 4—Delivery of Possession and Control to the Owner. Upon written request of the Owner, the Contractor will deliver to the Owner full possession and control of any portion of the Project provided the Contractor shall have been paid at least ninety percent (90%) of the cost of construction of such portion. Upon such delivery of possession and control to the Owner, the risks and obligations of the Contractor as set forth in Section 1f of this Article IV with respect to such portion so delivered to the Owner, shall be terminated; Provided, however, that nothing herein contained shall relieve the Contractor of any liability with respect to defective workmanship as specified in Article II, Section 4.

Section 5—Purchase of Materials. The Contractor shall purchase all materials and supplies outright and not subject to any conditional sales agreement, bailment lease, or other agreement reserving to the seller any right, title, or interest therein. All materials and supplies shall become the property of the Owner when erected in place.

Section 6—Assignment of Guarantees. All guarantees of materials and workmanship running in favor of the Contractor shall be transferred and assigned to the Owner on Completion of Construction and at such times as the Contractor receives final payment.

Article V—Remedies

Section 1—Completion on Contractor's Default. If default shall be made by the Contractor or by any subcontractor in the performance of any of the terms of this Proposal, the Owner, without in any manner limiting its legal and equitable remedies in the circumstances, may serve upon the Contractor and the Surety, if any, a written notice requiring the Contractor to cause such default to be corrected forthwith. Unless within twenty (20) days after the service of such notice upon the Contractor and the Surety, if any, such default shall be corrected or arrangements for the correction thereof satisfactory to the Owner shall be made, the Owner may take over the construction of the Project and prosecute the same to completion by contract or otherwise for the account and at the expense of the Contractor, and the Contractor shall be liable to the Owner for any cost or expense in excess of the Contract price occasioned thereby. In such event the Owner may take possession of and utilize, in completing the construction of the Project, any materials, tools, supplies, equipment, appliance, and plant belonging to the Contractor or any of its subcontractors, which may be situated at the site of the Project. The Owner in such contingency may exercise any rights, claims, or demands which the Contractor may have against third persons in connection with this Proposal and for such purpose the Contractor does hereby assign, transfer, and set over unto the Owner all such rights, claims, and demands.

Article VI—Miscellaneous

Section 1—Patent Infringement. The Contractor will save harmless and indemnify the Owner from any and all claims, suits, and proceedings for the infringement of any patent or patents covering any equipment used in the work.

Section 2—Materials and Supplies. In the performance of this contract there shall be furnished only such unmanufactured articles, materials, and supplies as have been mined or produced in the United States, Mexico, or Canada, and only such manufactured articles, materials, and supplies as have been manufactured in the United States substantially all from articles, materials, or supplies mined, produced or manufactured, as the case may be, in the United States, Mexico, or Canada; provided that other articles, materials, or supplies may be used in the event and to the extent that the Administrator shall expressly in writing authorize such use pursuant to the provisions of the Rural Electrification Act of 1938, being Title IV of Public Resolution No. 122, 75th Congress, approved June 21, 1938. The Contractor agrees to submit to the Purchaser such certificates with respect to compliance with the foregoing provision as the Administrator from time to time may require.

Section 3—Permits for Explosives. All permits necessary for the handling or use of dynamite or other explosives in connection with the construction of the Project shall be obtained by and at the expense of the Contractor.

Section 4—Compliance with Statutes and Regulations. The Contractor will comply with all applicable statutes, ordinances, rules, and regulations pertaining to the work. The Contractor acknowledges that it is familiar with the Rural Electrification Act of 1936, as amended, the so-called ''Kick-Back'' Statute (48 Stat. 948), and regulations issued pursuant thereto, and 18 U.S.C. §§ 287, 1001, as amended. The Contractor understands that the obligations of the parties hereunder are subject to the applicable regulations and orders of Governmental agencies having jurisdiction in the premises.

Section 5—Equal Opportunity Provisions. a. Contractor's Representations.

The Contractor represents that:

It has ____, does not have ____, 100 or more employees, and if it has, that it has ____, has not ____, furnished the Equal Employment Opportunity—Employers Information Report EEO–1, Standard Form 100, required of employers with 100 or more employees pursuant to Executive Order 11246 and Title VII of the Civil Rights Act of 1964. The Contractor agrees that it will obtain, prior to the award of any subcontract for more than $10,000 hereunder to a subcontractor with 100 or more employees, a statement, signed by the proposed subcontractor, that the proposed subcontractor has filed a current report on Standard Form 100.

The Contractor agrees that if it has 100 or more employees and has not submitted a report on Standard Form 100 for the current reporting year and that if this Contract will amount to more than $10,000, the Contractor will file such report, as required by law, and notify the Owner in writing of such filing prior to the Owner's acceptance of this Proposal.

b. Equal Opportunity Clause. During the performance of this Contract, the Contractor agrees as follows: (1) The Contractor will not discriminate against any employee or applicant for employment because of race, color, religion, sex, or national origin. The Contractor will take affirmative action to ensure that applicants are employed, and that employees are treated during employment without regard to their race, color, religion, sex, or national origin. Such action shall include, but not be limited to, the following: Employment, upgrading, demotion or transfer; recruitment or recruitment advertising; layoff or termination; rates of pay or other forms of compensation; and selection for training, including apprenticeship. The Contractor agrees to post in conspicuous places, available to employees and applicants for employment, notices to be provided setting forth the provisions of this Equal Opportunity Clause.

(2) The Contractor will, in all solicitations or advertisements for employees placed by or on behalf of the Contractor, state that all qualified applicants will receive consideration for employment without regard to race, color, religion, sex, or national origin.

(3) The Contractor will send to each labor union or representative of workers, with which it has a collective bargaining agreement or other contract or understanding, a notice to be provided advising the said labor union or workers' representatives of the Contractor's commitments under this section, and shall post copies of the notice in conspicuous places available to employees and applicants for employment.

(4) The Contractor will comply with all provisions of Executive Order 11246 of September 24, 1965, and of the rules, regulations, and relevant orders of the Secretary of Labor.

(5) The Contractor will furnish all information and reports required by Executive Order 11246 of September 24, 1965, and by rules, regulations, and orders of the Secretary of Labor, or pursuant thereto, and will permit access to its books, records, and accounts by the administering agency and the Secretary of Labor for purposes of investigation to ascertain compliance with such rules, regulations, and orders.

(6) In the event of the Contractor's noncompliance with the Equal Opportunity Clause of this Contract or with any of the said rules, regulations, or orders, this Contract may be cancelled, terminated, or suspended in whole or in part, and the Contractor may be declared ineligible for further Government contracts or federally assisted construction contracts in accordance with procedures authorized in Executive Order 11246 of September 24, 1965, and such other sanctions may be imposed and remedies invoked as provided in Executive Order 11246 of September 24, 1965, or by rule, regulation, or order of the Secretary of Labor, or as provided by law.

(7) The Contractor will include this Equal Opportunity Clause in every subcontract or purchase order unless exempted by the rules, regulations, or order of the Secretary of Labor issued pursuant to Section 204 of Executive Order 11246 of September 24, 1965, so that such provisions will be binding upon each subcontractor or vendor. The Contractor will take such action with respect to any subcontract or purchase order as the administering agency may direct as a means of enforcing such provisions, including sanctions for noncompliance: Provided, however, that in the event a Contractor becomes involved in, or is threatened with, litigation with a subcontractor or vendor as a result of such direction by the administering agency, the Contractor may request the United States to enter into such litigation to protect the interests of the United States.

c. Certificate of Nonsegregated Facilities. The Contractor certifies that it does not maintain or provide for its employees any

segregated facilities at any of its establishments, and that it does not permit its employees to perform their services at any location, under its control, where segregated facilities are maintained. The Contractor certifies further that it will not maintain or provide for its employees any segregated facilities at any of its establishments, and that it will not permit its employees to perform their services at any location, under its control, where segregated facilities are maintained. The Contractor agrees that a breach of this certification is a violation of the Equal Opportunity Clause in this Contract. As used in this certification, the term ''segregated facilities'' means any waiting rooms, work areas, restrooms and washrooms, restaurants and other eating areas, timeclocks, locker rooms and other storage or dressing areas, parking lots, drinking fountains, recreation or entertainment areas, transportation, and housing facilities provided for employees which are segregated by explicit directive or are in fact segregated on the basis of race, color, religion. or national origin, because of habit, local custom, or otherwise. The Contractor agrees that (except where it has obtained identical certifications from proposed subcontractors for specific time periods) it will obtain identical certifications from proposed subcontractors prior to the award of subcontracts exceeding $10,000 which are not exempt from the provisions of the Equal Opportunity Clause, and that it will retain such certifications in its files.

Section 6—Franchises and Rights-of-way. The Contractor will be under no obligation to obtain or assist in obtaining any franchises, authorizations, permits, or approvals required to be obtained by the Owner from Federal, State, County, municipal or other authority; any rights-of-way over private lands or any agreements between the Owner and third parties with respect to the joint use of poles, crossings or any other matter incident to the construction and operation of the Project.

Section 7—Nonassignment of Contract. The Contractor will not assign the Contract effected by an acceptance of this Proposal or any part thereof or enter into any contract with any person, firm or corporation for the performance of the Contractor's obligations thereunder, or any part thereof, without the approval in writing of the Owner.

Section 8—Definitions. a. The term ''Owner'' shall also include an engineer employed by the Owner, or a firm or engineer retained by the Owner, and designated by the Owner to act in that capacity. The Contractor will be notified in writing by the Owner of those designated to act for the Owner at the time of acceptance of this Proposal.

b. The term ''Completion of Construction'' shall mean full performance by the Contractor of the Contractor's obligations under the contract and all amendments and revisions thereof relating to any Section of the Project or to the Project except the Contractor's obligations in respect of (i) Certificate of Contractor and Indemnity Agreement—Line Extensions under Article III, Section 2 hereof and (ii) the Final Inventory referred to in Article III, Section 1a hereof.

c. The term ''Completion'' shall mean full performance by the Contractor of the Contractor's obligations under the Contract and all amendments and revisions thereof relating to any Section of the Project or to the Project.

Section 9—Extension to Successors and Assigns. Each and all of the covenants and agreements contained in the Contract effected by the acceptance of the Proposal shall extend to and be binding upon the successors and assigns of the parties thereto.

_____ (Contractor)
By _____ (President)
_____ (Address)
Attest: _____ (Secretary)
_____ Date of Proposal

This Proposal must be signed with the full name of the Contractor. If the Contractor is a partnership, the Proposal must be signed in the partnership name by a partner. If the Contractor is a corporation, the Proposal must be signed in the corporate name by a duly authorized officer and the corporate seal affixed and attested by the Secretary of the Corporation.

Construction Units—New Construction

Section 1—Pole Units

A pole unit consists of one pole in place. It does not include pole-top assembly unit or other parts attached to the pole. The first two digits indicate the length of the pole; the third digit shows the classification per A.S.A. (Example: 25–6 means a pole 25 feet long, class 6.)

Species of Timber: _____
Kind of Preservative: (Check one)
1. Creosote _____; 2. Pentachlorophenol _____; 3. Copper Naphthenate _____; 4. Waterborne preservative—CCA _____ ACZA _____
Method of Treatment: (Check one)
1. Pressure _____; 2. Thermal process: _____
Pole Plan Under Which the Poles are to be Furnished: (Check one)
1. Insured Warranted _____; 2. Independently Inspected _____; 3. Quality Assured _____; 4. Either Insured Warranted, Independently Inspected, or Quality Assured _____
(Owner to complete above)

Unit No.	Unit price		
	Labor	Materials	Labor & materials

Section A—Single Phase Pole Top Assembpy Units

Section B—V Phase Pole Top Assembly Units

A pole top assembly unit consists of the hardware, crossarms, and their appurtenances, insulators, etc., except tie wire, required to support the primary conductors. It does not include the pole. Crossarm pins include 2x2x1/8 inch washer, nut, and locknut.

Unit No.	Unit price		
	Labor	Materials	Labor & materials
A B			

Section C—Three Phase Pole Top Assembly Units

A pole top assembly unit consists of the hardware, crossarms, and their appurtenances, insulators, etc., except tie wire, required to support the primary conductors. It does not include the pole. Crossarm pins include 2x2x1/8 inch washer, nut, and locknut.

Unit No.	Unit price		
	Labor	Materials	Labor & materials
C			

Section D—Conductor Assembly Units

A conductor assembly unit consists of 1,000 feet of conductor or cable for primaries, secondaries or services, and includes tie wires, sleeves for splicing, connectors, and armor rods with clips or armor wire where necessary. Tree trimming necessary for installing services and secondaries on poles not carrying primary line is included with the conductor assembly unit and shall be performed in accordance with the directions of the Owner. The service shall be connected to the secondary or transformer and 2 feet of conductor or cable shall be left for connecting to the consumer's service entrance. In computing the compensation to the Contractor for conductor assembly units only the horizontal distance between conductor supports or pole stakes shall be used. The conductor or cable sizes and types listed are the manufacturer's designation.

Unit No.	Unit price		
	Labor	Materials	Labor & materials
D			

Section E—Guy Assembly Units

A guy assembly unit consists of the hardware and wire, and guy insulator where necessary. An overhead guy assembly consists of an overhead guy, a pole, and a down guy, each of which is listed separately. Guy guards are designated separately.

Unit No.	Unit price		
	Labor	Materials	Labor & materials
E			

Section F—Anchor Assembly Units

An anchor assembly unit consists of the anchor with rod complete, ready for attaching the guy wire.

Unit No.	Unit price		
	Labor	Materials	Labor & materials
F			

Section G—Transformer Assembly Units

A transformer assembly unit consists of the transformer, its protective equipment, and its hardware and leads with their connectors and supporting insulators and pins. This unit does not include the pole top, secondary, service, or grounding assemblies.

Unit No.	Unit price		
	Labor	Materials	Labor & materials
G			

Section J—Secondary Assembly Units

A secondary assembly unit consists of the hardware, insulators, etc., to support the secondary conductors or cable. It does not include the secondary conductor or cable, or any hardware, insulators, etc., required to support service conductors or cable.

Unit No.	Unit price		
	Labor	Materials	Labor & materials
J			

SECTION K—SERVICE ASSEMBLY UNITS

A service assembly unit consists of the hardware, insulators, etc., required to support the service conductors or cable. It does not include the service conductor or cable, or

any hardware, insulators, etc., required to support secondary conductors or cable.

Unit No.	Unit price		
	Labor	Materials	Labor & materials
K			

Section M—Miscellaneous Assembly Units

A miscellaneous assembly unit consists of an additional unit needed in the Project for new line construction but not otherwise listed in the Proposal. This section includes grounding assemblies consisting of the conductor, ground rod, grounding plate, connectors and clamps as shown on the respec tive drawings for the various types. It also includes fuse cutouts, reclosers, sectionalizers, switches, capacitors, regulators, metering and other assembly units.

Unit No.	Unit price		
	Labor	Materials	Labor & materials
M			

Section R—Right-of-Way Clearing Units

R1–10. The unit is 1,000 feet in length and 10 feet in width (to be measured on one side of the pole line) of actual clearing of right-of-way. This includes clearing of underbrush, tree removal, and such tree trimming as is required so that the right-of-way, except for tree stumps which shall not exceed ____ in height, shall be clear from the ground up on one side of the line of poles carrying primary conductors of the width specified. This unit does not include clearing or trimming associated with secondaries or services which is included with conductor units. The length of actual clearing shall be measured in a straight line parallel to the horizontal line between stakes and across the maximum dimension of foliage cleared projected to the ground line. All trees and underbrush across the width of the right-of-way, as designated by the Owner, shall be considered to be grouped together as a single length in measuring the total length of clearing. Spaces along the right-of-way in which no trees are to be removed or trimmed or underbrush cleared shall be omitted from the total measurement. All length thus arrived at, added together and divided by 1,000, shall give the number of 1,000-foot R1–10 units of clearing. This unit includes the removal or topping, at the option of the Contractor, of danger trees outside of the right-of-way when so designated by the Owner. (Danger trees are defined as dead or leaning trees which, in falling, will affect the operation of the line.)

The Contractor shall not remove or trim shade, fruit, or ornamental trees unless so directed by the Owner.

R1–20. This unit is identical with R1–10 except that width is 20 feet (to be measured 10 feet on each side of the pole line).

R1–30. This unit is identical with R1–10 except that width is 30 feet (to be measured 15 feet on each side of the pole line).

R1–40. This unit is identical with R1–10 except that width is 40 feet (to be measured 20 feet on each side of the pole line).

RC1–10, RC1–20, RC1–30, RC1–40. These units are identical to the respective R1 units except that chemical treatment of stumps is required in addition to the clearing of underbrush, tree removal and tree trimming.

Additional Requirements (When specifying R1 units denote type of disposal (A or B).)

A. Trees, brush, branches and refuse shall, without delay, be disposed of by such of the following methods as the Owner will direct (Owner to strike out methods not to be used):

1. Burned.
2. Piled on one side of right-of-way.
3. Roller chopped and left on right-of-way in such a manner as not to obstruct roads, ditches, drains, etc.
4. Other (describe) ____.

B. Trees that are felled shall be cut to commercial wood lengths, stacked neatly, and left on the right-of-way for the landowner. Commercial wood length means the length designated by the Owner but in no case shall it be required to be less than ____ (____) feet. Brush, branches, and refuse shall, without delay, be disposed of by such of the following methods as the Owner will direct (Owner to strike out methods not to be used):

1. Burned.
2. Piled on one side of right-of-way.
3. Roller chopped and left on right-of-way in such a manner as not to obstruct roads, ditches, drains, etc.
4. Other (describe) ____.

Unit No.	Unit price		
	Labor	Materials	Labor & materials
R			

Section S—Substation Assembly Units

A substation assembly unit consists of the complete substation ready for connection of the line conductors, as shown on the substation drawings attached.

Unit No.	Unit price		
	Labor	Materials	Labor & materials
S			

Section UD—Underground Cable Assembly Units

An underground cable assembly unit consists of 1,000 feet of cable for underground primaries, secondaries or services. It does not include the conduit, plowing, trenching and backfilling, or the termination of the primary cable which are provided for in other assembly units. It includes the termination, connection and sealing of secondary and service cables and conductors as shown in the specifications and construction drawings, and all primary, secondary and service cable splices (buried cable may be spliced only when and where permitted,[1,2] by the Owner). In computing the compensation to the Contractor for underground cable assembly units, only the distance between stakes, paralleling the cable shall be used. The number of units so computed will include all cable installed in place in all specified trenches, risers, conduits, crossings, manholes, transformers, terminal housings and meter boxes.[3]) The conductor or cables listed are the manufacturer's designation of types, size, voltage rating and material. The Contractor and the Owner shall jointly perform cable acceptance tests on installed cable in accordance with the specifications using test equipment furnished by the ____. (Owner to insert Owner or Contractor.)

Unit No.	Unit price		
	Labor	Materials	Labor & materials
UD			

Section UG—Underground Transformer Assembly Units

An underground transformer assembly unit consists of the transformer, its housing, warning sign, switches, over-current protective devices, grounding loop, and hardware and leads with their connectors and supporting insulators installed in place. This unit includes the cable terminations but does not include lightning arresters, fault indicators, ground rods or trenching. For submersible transformers, it includes the cable terminations, the enclosure and cover, drainable material (when specified[4]), and the excavation when required. For pad-mount transformers, it does not include the pad, site preparation, drainable material, backfilling or compaction which are included in the pad assembly units.

Unit No.	Unit price		
	Labor	Materials	Labor & materials
UG			

Section UK—Underground Secondary and Service Assembly Units

An underground secondary and service assembly unit consists of secondary or service cable terminal housing mounted in place. It includes the power pedestal, stake (when required), mounting hardware, warning sign, directional marker, housing identification marking, and the cable identification tags. It does not include the cable terminations, ground rod, or pad, when required.

Unit No.	Unit price		
	Labor	Materials	Labor & materials
UK			

Section UM—Miscellaneous Underground Assembly Units

A miscellaneous underground assembly unit consists of an additional unit needed in the Project for new construction but not otherwise listed in the Proposal. This section includes the miscellaneous assembly units as shown on the respective underground construction drawings. Where miscellaneous units consist of or include a primary cable termination, the unit includes the preparation of the cable to accommodate the termination, the stress cone and the connection of the cable to the terminal equipment. Pad assembly units are in this section and include the site preparation, bedding, drainable material when specified, cable slot, backfilling, tamping and the pad in place.

Unit No.	Unit price		
	Labor	Materials	Labor & materials
UM			

SECTION UR—UNDERGROUND EXCAVATION ASSEMBLY UNITS

UR1–S (D) Plowing Assembly Unit, Soil—Consists of one (1) lineal foot of plowing in soil, measured parallel to the surface of the ground, to a specified depth (D), in inches, including the compacting, except as specifically provided for in other units. This unit includes all material and labor required in the repair and/or replacement of streets, roads, drives, fences, lawns, shrubbery, watermains, pipes, pipelines and contents,

[1] ____ Owner check here if primary splices are permitted;

[2] ____ Owner check here if secondary and service splices are permitted.

[3] ____ Owner check here if 12 feet of service conductor is to be left as a coil three feet from the building with ends capped instead of connection to meter box.

[4] ____ Owner check here if drainable material is specified.

underground power and telephone facilities, buried sewerage and drainage facilities, and any other property damaged during the plowing of the cable, except as specifically provided for in other units. This unit does not include underground cable facilities installed in the slot.

NOTE: Where in the judgment of the Owner greater than normal difficulty will be involved in plowing because of the presence of underground facilities of other utilities, this unit will be suffixed by the letter ''T''. This will be applicable only in those areas predesignated by the Owner on the detail maps herein. All plowing outside of the predesignated area on the map, regardless of the difficulty in placement actually experienced, will be inventoried as the regular UR1–S (D) units. If field conditions show the existence of rock to prevent the placing of the cable in soil to the depth required in the specifications the Owner may specify UR2–R units. Where more than one cable is to be installed in the slot, the UR1–S unit designation should be modified by a suffix corresponding to the number of cables installed. For example, UR1–S (D)3c for 3 cables plowed at one time.

UR2–S (D&W) Trenching Assembly Unit, Soil—Consists of one (1) lineal foot of trenching in soil, measure parallel to the surface of the ground, to a specified depth (D) and width (W), in inches, including the excavation, and backfilling and compacting. This unit includes all material and labor required in the repair and/or replacement of streets, roads, drives, fences, lawns, shrubbery, watermains, pipes, pipelines and contents, underground power and telephone facilities, buried sewerage and drainage facilities, and any other property damaged by the trenching, except as specifically provided for in other units. This unit does not include underground cable facilities installed in the trench or cable bedding assembly units, when required.

NOTE: Where in the judgment of the Owner greater than normal difficulty will be involved in trenching because of the presence of underground facilities of other utilities, this unit will be suffixed by the letter ''T''. This will be applicable only in those areas predesignated by the Owner on the detail maps herein. Where more than one cable is to be installed in the trench, the regular UR2–S unit designation should be modified by a suffix corresponding to the construction drawing for the type of cable placement desired.

UR2–R (D&W) Trenching Assembly Unit, Rock—Consists of one (1) lineal foot of trenching in rock, measured parallel to the surface of the ground, to specified depth (D) and width (W), in inches, including the excavation, and backfilling and compacting to place cable to the depth specified in the Specifications. This unit will be specified by the Owner only when field conditions at the site show the existence of rock at a depth preventing the placing of the cable in soil to the depths required in the Specifications. This unit includes all material and labor required in the repair and/or replacement of streets, roads, drives fences, lawns, shrubbery, watermains, pipes, pipelines and contents, underground power and telephone facilities, buried sewerage and drainage facilities, and any other property damaged by the trenching, except as specifically provided for in other units. This unit does not include underground cable facilities installed in the trench or cable bedding assembly units, when required.

UR–3 Cable Bedding Assembly Unit—Consists of one (1) lineal foot of a two-inch bed of clean and or soil placed in the trench under the cable and a four-inch layer of clean sand or soil backfill over the cable to the width of the trench.

NOTE: The exact location and number of units shall be determined by the Owner after the trenches are open in those areas where rock or other conditions make special bedding necessary.

UR–4a Pavement Assembly Unit, Asphalt—Consists of the labor and material necessary to remove and restore one (1) lineal foot of asphalt pavement, measured along the route of the cable, including any trenching necessary to place the cable at the required depth. All work shall be performed in accordance with the requirements of state or local authorities.

UR–4c Pavement Assembly Unit, Concrete—Consists of the labor and material necessary to remove and restore one (1) lineal foot of concrete pavement, measured along the route of the cable, including any trenching necessary to place the cable at the required depth. All work shall be performed in accordance with the requirements of state or local authorities.

UR–5 ( ) Underground Pipe Crossing Assembly Unit—Consists of one (1) lineal foot of steel pipe, of the inside diameter, in inches, specified in the last digit of the assembly unit designation, installed in place. This unit includes the pushing of pipe and any excavation, backfilling and tamping necessary for the installation of the pipe. The pipe will be installed at the depth specified by the Owner. Underground cable installed in the pipe is not included in this unit.

UR–6 Underground Nonpipe Crossing Assembly Unit—Consists of the labor in providing a hole in soil one (1) foot in length of a diameter sufficient to accommodate the cable to be installed therein. The depth of the hole below the surface of the ground

shall be specified by the Owner. This unit includes any excavation, backfilling and tamping necessary for the installation. This unit may be used where the permanent installation of a steel pipe under the UR–5 unit is not required. Underground cable installed in the hole is not included in this unit.

Unit No.	Unit price		
	Labor	Materials	Labor & materials
UR			

Construction Units—Line Changes

The general heading of Line Changes applies to the changing of existing lines or portions thereof from their existing phasing, wire size, and type to new phasing, wire size, and type and the removal of existing lines or portions thereof and replacing with new lines in close proximity thereto. In general line changes involve three types of assembly units as follows:

Section H—Conversion assembly units;

Section I—Removal assembly units;

Section N—New construction assembly units on existing lines or in replacing lines.

The assembly units that are included in Sections H, I, and N are defined by symbols and descriptions which follow together with the applicable descriptions included under New Construction. Where the descriptions are not correct or sufficiently explicit, or when special units are not covered by Construction Drawings, descriptions have been provided by the Owner in the respective sections.

Work included in these sections shall be performed under a schedule of deenergization and operating procedures as set forth by the Owner at the time of release of any Section involving work on existing lines. The Contractor will so plan and perform its work that it will be possible to safely reenergize all lines involved at the expiration of the time limits set up in the schedule to resume service to all consumers being served prior to deenergization. Prior to commencement of work each day on lines to be deenergized, and upon completion of work each day on such lines, the Contractor will notify the Owner thereof in writing or in such other manner as the circumstances permit.

Section H—Conversion Assembly Units

Conversion assembly units are pole-top assemblies and cover the furnishing of all labor and additional materials for changing an existing assembly unit to a new assembly unit, utilizing certain items of materials of the existing assembly unit on poles to be left in place. Any materials removed from the existing assembly units which are not required in the construction of the conversion assembly unit are to be reused by the Contractor in the construction of other assembly units, or returned to Owner's warehouse, as directed by the Owner.

Conversion assembly units are specified by the prefix H with the new construction assembly unit designation shown first and the existing assembly unit designation shown last. For example, an H B1–A1 signifies the conversion of an existing A1 assembly unit to a B1 assembly unit (as was defined in the description of construction assembly units). In this instance the Contractor utilizes the existing pin-type insulator, single upset bolt and neutral spool and furnishes the additional crossarm, crossarm pins, braces, machine bolt, carriage bolts, lag screw, and insulator required for the new unit. The Contractor transports the pole-top pin and two machine bolts to the warehouse or uses them on the Project as directed by the Owner.

The Conversion assembly units also include the furnishing of all labor and materials in the transferring, resagging and retying of conductors from one position on the pole to a different position on the pole where such transfers are required. Where replacement of conductor is required, the existing conductor will be removed under Section I and the new conductor installed under Section N.

Where replacement of a pole is required, the existing pole and pole-top assembly will be removed under Section I and the new pole and pole-top assembly will be installed according to Section N and no H units will be involved.

Conversion assemblies are listed in three subsections for converting pole-top assemblies from single to V phase, single to three phase, and V to three phase. The following descriptions apply to only those conversion units not sufficiently explicit:

Unit	Description

Subsection H (B–A)—1 Phase to V Phase

Unit No.	Unit price		
	Labor	Materials	Labor & materials
H			

Subsection H (C–A)—1 Phase to 3 Phase

Unit No.	Unit price		
	Labor	Materials	Labor & materials
H			

Subsection H (C–B)—V Phase to 3 Phase

Unit No.	Unit price		
	Labor	Materials	Labor & materials
H			

Section I—Removal Assembly Units

Removal assembly units cover the furnishing of all labor for the removal of existing units of construction from existing lines, disassembling into material items, and all labor and transportation for the returning of all materials to the warehouse of the Owner in an orderly manner or transporting elsewhere to the site of the Project for reuse in the prosecution of this Contract as directed by the Owner. All materials removed remain the property of the Owner. The provisions for Owner-Furnished materials in the Proposal shall apply if such materials are reused for construction of the Project.

The unit removal prices shall include all materials and labor required to reinstall in accordance with specifications any conductors temporarily detached. The Contractor will reinstall at his own expense any other units removed by him for his own convenience.

The removal units are specified by the prefix I and followed by the assembly unit designation of existing assembly unit to be removed. For example, an I–A1 signifies the removal of an A1 assembly unit. The following special notes apply to specific removal units:

a. Poles. All poles of the same height, regardless of pole class, are designated by the same unit. Thus an I–30-foot pole signifies the removal of a 30-foot pole of any class. The Contractor is not required under this unit to remove from the pole any ground wire or pole numbering attached to the pole. This unit includes the refilling and tamping of holes in a workmanlike manner unless they are to be reused.

b. Pole-top Assemblies. The unit of removal of pole-top assemblies includes, in addition to the removal of the assembly itself, any necessary handling, resagging, and retying of conductors in those cases where an existing pole-top assembly will be removed and replaced by a new pole-top assembly and where any existing conductor is to be reused.

The unit of removal of pole-top assemblies also includes any holding or handling of mainline or tap conductors at tap lines, angles, and deadends where such is involved, and the reinstalling of such conductor in accordance with the specifications; for example, an I–A5–4 will include the disconnection of the tap conductors, snubbing off the tap line at the nearest practical point and the reconnection and resagging of these tap conductors if necessary to the new tap assembly when installed. The new unit of construction, however, will be specified separately in Section N.

c. Conductor. The conductor removal unit covers the removal of 1,000 feet of conductor or cable and reeling or coiling it in a workmanlike manner in such a way that it can be reused by the Contractor or the Owner. The Owner will furnish to the Contractor reels if it is to be returned to the Owner's warehouse on reels. The removal unit for each size of conductor or cable is shown by the prefix I followed by D and the conductor or cable type; thus an I–D 6ACWC signifies the removal unit for 1,000 feet of 6 A Copperweld-copper conductor.

d. Guys. All guys regardless of length, type of attachment, or size of guy strand are specified by the same unit; thus an I–E signifies the removal of any guy.

e. Anchors. Only anchor rods are to be removed by the Contractor in anchor removal units. The anchors will be left in the ground; thus an I–F signifies the removal of any anchor rod. If the rod cannot be unscrewed, the end of the rod shall either be cut off or bent down so that the rod will be at least 18 inches below ground.

f. Transformers. The unit for removal of transformer assembly units is divided into two sections, (1) Conventional Transformer Assembly, and (2) Self-protected Transformer Assembly. Only one unit is specified for each type, and all sizes of transformers from 1 to 15 kVA within each group will be covered by the same unit. ''Self-protected'' refers to transformers where all protective equipment is mounted on or within the transformer. ''Conventional'' refers to transformers where protective equipment is mounted separately from the transformer. The unit is designated by the prefix I followed by the description of the unit to be removed; thus I–G Conventional signifies the removal of a conventional transformer assembly for any size transformer from 1 to 15 kVA.

g. Secondary Units. The unit for removal of secondary assemblies includes, in addition to the removal of the assembly itself, all necessary handling such as untying, resagging, and retying of secondary conductor or cables where existing secondary conductor or cable is to be reused. In addition, the unit for removal of the secondary assembly includes the handling or holding of any conductor at tap lines where such is involved, and the reinstalling of such tap conductor in accordance with the specifications.

h. Service Unit. The unit for removal of service assemblies includes, in addition to the removal of the assembly itself, all necessary handling such as untying, resagging, and retying of service conductor or cable where existing service conductor or cable is to be reused.

The following descriptions apply only to those removal units not sufficiently explicit:

Unit	Description

Unit No.	Unit labor price
I	

Section N—New Assembly Units

The purpose of this section is to list complete new units of construction where such units are to be added to existing lines or installed in replacing lines.

The units as covered by this section are the same as the units described in Construction Units—New Construction, except that these units are prefixed by the letter N.

For example, an N40–6 unit covers the furnishing of all material and labor for the installation of a 40–6 pole either in an existing distribution line being operated by the Owner or in a new line being constructed to replace an existing distribution line being operated by the Owner.

The following descriptions apply only to those new units not sufficiently explicit:

Unit	Description

Unit No.	Unit price		
	Labor	Materials	Labor & materials
N			

Acceptance

The undersigned hereby accepts the foregoing Proposal of _____, dated _____, to construct the rural electric Project _____ 19___ Line Extensions.

_____ (Owner)
By _____ (President)
_____ Secretary
_____ Date of Contract

[End of clause]

§ 1726.343 Distribution line extension construction contract (labor only), RUS Form 792.

The contract form in this section shall be used when required by this part.

DISTRIBUTION LINE EXTENSION CONSTRUCTION CONTRACT (LABOR ONLY)

Proposal

To: _____ (hereinafter called the ''Owner'').

Article I—General

Section 1—Offer to Construct. The undersigned (hereinafter called the ''Contractor'') hereby proposes to construct for the prices hereinafter stated, with materials furnished by the Owner, the rural electric project _____, 19___ Line Extensions (hereinafter called ''Project'') in strict accordance with the Plans, Specifications, and Construction Drawings hereinafter referred to. The Contractor understands and agrees that the Project will consist of line extensions and additions and line changes or similar work usually associated with overhead or underground distribution system improvement or extension work all located within the area served or ultimately to be served by the Owner and that the exact location and scope of individual sections of the Project (hereinafter called ''Sections'') will be made known to the Contractor from time to time as provided in Article II, Section 1 hereof; and provided, however, that the Contractor shall not be obligated to start construction of any Section unless the cost of construction of the Section computed on the unit prices of this Proposal shall amount to at least _____ dollars ($_____) and provided further that the Owner shall be obligated to release to the Contractor for construction at least one Section pursuant to the provisions of this Proposal.

Section 2—Additional Projects. From time to time the Owner and the Contractor may enter into negotiations for the performance of work at labor prices which may differ from those in the Proposal (such work being hereinafter called ''Additional Projects''). Except as may otherwise be agreed upon in writing by the Owner and the Contractor at the time the supplemental contract for the Additional Project is negotiated, the provisions of the Contract for the Project shall apply.

Section 3—Proposal on Unit Basis. The Contractor understands and agrees that the various Construction Units considered in this Proposal are defined by symbols and descriptions in this Proposal, that the Proposal is made on a unit basis, and that the Owner may specify, as provided in Article II, Section 1 hereof, any number or combination of Construction Units which the Owner, may deem necessary for the construction of the Project. If kinds of Construction Units for which prices are not established in this Proposal are necessary for the construction of the Project, the prices of such additional Units shall be as agreed upon in writing by the Owner and the Contractor prior to the time of installation. The unit prices herein set forth are applicable to work performed on unenergized lines. Such unit prices shall be increased by _____ (_____) percent for

all units installed on energized lines in accordance with instructions of the Owner, as provided in Article II, Section 1g.

Section 4—Description of Contract. The Specifications and Construction Drawings set forth in: RUS Form 804, Specifications and Drawings for 7.2/12.5 kV Line Construction; RUS Form 803, Specifications and Drawings for 14.4/24.9 kV Line Construction; RUS Form 806, Specifications and Drawings for Underground Electric Distribution; as applicable, which by this reference are incorporated herein, together with the Plans, Proposal and Acceptance constitute the Contract. The Plans, consisting of maps and special drawings, and approved modifications in standard specifications are attached hereto and identified as follows: _____

Section 5—Familiarity with Conditions. The Contractor acknowledges that it has made a careful examination of the site of the Project and of the Plans, Specifications and Construction Drawings, and has become informed as to the location and nature of the proposed construction, the transportation facilities, the kind and character of soil and terrain to be encountered, the kind of equipment, tools, and other facilities required before and during the construction of the Project and has become acquainted with the availability status of materials to be furnished by the Owner and with the labor conditions which would affect work on the Project.

Section 6—License. The Contractor warrants that a Contractor's license is ___ is not ___ required, and if required, it possesses Contractor's License No. _____ for the State of _____ in which the Project is located, and said license expires on _____, 19___.

Section 7—Contractor's Resources. The Contractor warrants that it possesses adequate financial resources for the performance of the work covered by this Proposal and that it will provide necessary tools and equipment and a qualified superintendent and other employees.

Section 8—Changes in Construction. The Contractor agrees to make such changes in construction previously installed in the Project by the Contractor as required by the Owner on the following basis: The cost of labor shall be the reasonable cost thereof as agreed upon by the Contractor and the Owner but in no event shall it exceed two (2) times the labor price quoted in the Proposal for the installation of the unit to be changed. Such compensation shall be in lieu of any other payment for the installation and removal of the original unit but shall not include the cost of the installation, if any, of a new or replacing unit, payment for which shall be made at the unit price as quoted in the Proposal. No payment shall be made to the Contractor for correcting errors or omissions on the part of the Contractor which result in construction not in accordance with the Plans and Specifications.

Article II—Construction

Section 1—Time and Manner of Work. The Contractor agrees to be prepared to commence the construction of the Project within fifteen (15) calendar days after written notice by the Owner of acceptance of the Proposal. The Contractor agrees to commence construction of a Section within _____ (_____) days after receipt in writing from the Owner of the following:

a. Location and number of the various Construction Units required for construction of the Section (hereinafter called the ''Staking Sheets'').

b. Itemized list of the materials required for the construction of the Section and an authorization by the Owner for the Contractor to obtain such materials from the Owner's warehouse located at ___.

c. A schedule showing the rate at which construction of the Section shall proceed and the total number of calendar days (excluding Sundays) to be allowed for completion; provided, however, that the required completion time for any Section shall not be less than _____ (_____) days or _____ (_____) days per mile of line, whichever is the greater, which days shall be calendar days (excluding Sundays). The time of the completion of the Section is of the essence of the contract to be effected by acceptance of this Proposal.

d. A statement that all required easements and rights-of-way have been obtained from the owners of the properties across which the Section is to be constructed (including tenants who may reasonably be expected to object to such construction).

e. A statement that all necessary staking has been completed.

f. A statement that all necessary funds for prompt payment for the construction of the Section will be available.

g. Specific instruction as to location and extent of work to be performed on energized lines, if any. The Contractor will not be required to dig holes, set poles, install anchors, install underground conduit, perform any plowing for the installation of underground cable, or dig trenches if there are more than six (6) inches of frost in the ground nor to perform any construction on such days when in the judgment of the Owner snow, rain, or wind or the results of snow, rain, or frost make it impracticable to perform any operations of construction; provided further that the contractor will not perform any plowing for the installation of underground cable on public roads or highways if there are more than two (2) inches of frost in the ground. To the extent of the time lost due to the conditions described herein and approved in writing by the Owner, the time of completion set out above will be extended. The time for

completion shall be extended for a period of any reasonable delay (other than a delay resulting from the failure of the Contractor to secure sufficient labor) which is due exclusively to causes beyond the control and without the fault of the Contractor including acts of God, fires, floods, inability to obtain materials, direction of the Owner to cease construction as herein provided, and acts or omissions of the Owner with respect to matters for which the Owner is solely responsible: Provided, however, that no such extension of time for completion shall be granted the Contractor unless within ten (10) days after the happening of any event relied upon by the Contractor for such an extension of time the Contractor shall have made a written request therefor in writing to the Owner, and provided further that no delay in such time of completion or in the progress of the work which results from any of the above causes, except acts or omissions of the Owner, shall result in any liability on the part of the Owner.

Section 2—Changes in Plans, Specifications and Drawings. The Owner may, from time to time during the progress of the construction of the Project, make such changes in, additions to, or subtractions from the Plans, Specifications, and Construction Drawings as conditions may warrant: Provided, however, that if the cost to the Contractor shall be materially increased by any such change or addition, the Owner shall pay the Contractor for the reasonable cost thereof in accordance with a construction contract amendment signed by the Owner and the Contractor, but no claim for additional compensation for any such change or addition will be considered unless the Contractor shall have made a written request therefor to the Owner prior to the commencement of work in connection with such change or addition.

Section 3—Supervision and Inspection. a. The Contractor shall cause the construction work on the Project to receive constant supervision by a competent superintendent (hereinafter called the ''Superintendent'') who shall be present at all times during working hours where construction is being carried on. The Contractor shall also employ, in connection with the construction of the Project, capable, experienced, and reliable foremen and such skilled workmen as may be required for the various classes of work to be performed. Directions and instructions given to the Superintendent by the Owner shall be binding upon the Contractor.

b. The Owner reserves the right to require the removal from the Project of any employee of the Contractor if in the judgment of the Owner such removal shall be necessary in order to protect the interest of the Owner. The Owner shall have the right to require the Contractor to increase the number of his employees and to increase or change the amount or kind of tools and equipment if at any time the progress of the work shall be unsatisfactory to the Owner; but the failure of the Owner to give any such directions shall not relieve the Contractor of his obligations to complete the work within the time and in the manner specified in this Proposal.

c. The manner of performance of the work, and all equipment used therein, shall be subject to the inspection, tests, and approval of the Owner. The Owner shall have the right to inspect all payrolls and other data and records of the Contractor relevant to the work. The Contractor will provide all reasonable facilities necessary for such inspection and tests. The Contractor shall have an authorized agent accompany the inspector when final inspection is made and, if requested by the Owner, when any other inspection is made.

d. In the event that the Owner shall determine that the construction contains or may contain numerous defects, it shall be the duty of the Contractor, if requested by the Owner, to have an inspection made by an engineer approved by the Owner for the purpose of determining the exact nature, extent, and location of such defects.

Section 4—Defective Workmanship. The acceptance of any workmanship by the Owner shall not preclude the subsequent rejection thereof if such workmanship shall be found to be defective after installation, and any such workmanship found defective before final acceptance of the work or within one (1) year after completion shall be remedied or replaced, as the case may be, by and at the expense of the Contractor. In the event of failure by the Contractor so to do, the Owner may remedy such defective workmanship and in such event the Contractor shall pay to the Owner the cost and expense thereof. The Contractor shall not be entitled to any payment hereunder so long as any defective workmanship, in respect of the Project, of which the Contractor shall have had notice, shall not have been remedied or replaced, as the case may be.

Section 5—Materials. At or prior to the commencement of construction of each Section, the Owner shall make available to the Contractor all materials for such Section which the Owner has on hand, and from time to time as such additional deliveries of materials, if any, are received by the Owner, the Owner shall make such materials available to the Contractor: Provided, however, that the Contractor or his authorized representative will give to the Owner a receipt in such form as the Owner shall approve for all materials furnished by the Owner to the Contractor. The Contractor will return to the Owner or reuse in the construction of other assembly units all materials removed from

the lines under Section H—Conversion Assembly Units and Section I—Removal Assembly Units. Upon completion of each Section of the Project the Contractor will return to the Owner all materials, including usable materials as well as scrap, furnished by the Owner in excess of those required for the construction of the Section as determined from the Final Inventory approved by the Owner. The Contractor will reimburse the Owner at the current invoice cost to the Owner for loss and for breakage through Contractor's negligence of materials furnished by the Owner to the Contractor and for materials removed from the lines by the Contractor.

Section 6—Term of Contract. It is understood and agreed that, notwithstanding any other provisions of this Contract, the Contractor will not be required to commence any construction after the expiration of 1 year _____, 2 years _____ following acceptance of this Proposal by the Owner.

Article III—Payment

Section 1—Payments to Contractor. a. Within the first fifteen (15) days of each calendar month, the Owner shall make partial payment to the Contractor for construction accomplished during the preceding calendar month on the basis of completed Construction Units furnished and certified to by the Contractor and approved by the Owner solely for the purpose of payment: Provided, however, that such approval by the Owner shall not be deemed approval of the workmanship or materials. Only ninety percent (90%) of each such estimate approved during the construction of a Section shall be paid by the Owner to the Contractor prior to completion of the Section. Upon completion by the Contractor of the construction of a Section, the Contractor will prepare a Final Inventory of the Section showing the total number and character of Construction Units and, will certify it to the Owner together with a certificate of the total cost of the construction performed. Upon the approval of such certificates, the Owner shall make payment to the Contractor of all amounts to which the Contractor shall be entitled thereunder which shall not have been paid.

b. The Contractor shall be paid on the basis of the number of Construction Units actually installed at the direction of the Owner, as shown by the Inventory based on the Staking Sheets: Provided, however, that the total cost shall not exceed the maximum Contract price for the construction of the Project, unless such excess shall have been approved in writing by the Owner. It is understood and agreed that this maximum Contract price is _____ dollars ($_____). It is also agreed that the Contractor shall not be entitled to any claim for damages on account of any reasonable additions to or subtractions from the Project, or of any delay occasioned thereby, or of any changes in the routing of the lines.

c. No payment shall be due while the Contractor is in default in respect of any of the provisions of this Contract and the Owner may withhold from the Contractor the amount of any claim by a third party against either the Contractor or the Owner based upon an alleged failure of the Contractor to perform the work hereunder in accordance with the provisions of this Contract.

Section 2—Certificate of Contractor and Indemnity Agreement—Line Extensions. Upon the Completion of Construction of any Section of the Project but prior to payment to the Contractor of any amount in excess of ninety percent (90%) of the total cost of all Construction Units comprising the completed Section, the Contractor shall deliver to the Owner in the form attached hereto, (1) a certificate that all persons who have furnished labor in connection with the Project and subcontractors who have furnished services for the Project have been paid in full, and (2) an agreement to hold the Owner harmless against any liens arising out of the Contractor's performance hereunder which may have been or may be filed against the Owner.

Article IV—Particular Undertakings of the Contractor

Section 1—Protection to Persons and Property. The Contractor shall at all times take all reasonable precautions for the safety of employees on the work and of the public, and shall comply with all applicable provisions of Federal, State, and Municipal safety laws and building and construction codes, as well as the safety rules and regulations of the Owner. All machinery and equipment and other physical hazards shall be guarded in accordance with the ''Manual of Accident Prevention in Construction'' of the Associated General Contractors of America unless such instructions are incompatible with Federal, State, or Municipal laws or regulations.

The following provisions shall not limit the generality of the above requirements:

a. The Contractor shall at no time and under no circumstances cause or permit any employee of the Contractor to perform any work upon energized lines, or upon poles carrying energized lines, unless otherwise specified in accordance with Article II, Section 1, subsection g.

b. The Contractor shall so conduct the construction of the Project as to cause the least possible obstruction of public highways.

c. The Contractor shall provide and maintain all such guard lights and other protection for the public as may be required by applicable statutes, ordinances, and regulations or by local conditions.

d. The Contractor shall do all things necessary or expedient to protect properly any

and all parallel, converging, and intersecting lines, joint line poles, highways, and any and all property of others from damage, and in the event that any such parallel, converging and intersecting lines, joint line poles, highways, or other property are damaged in the course of the construction of the Project the Contractor shall at its own expense restore any or all of such damaged property immediately to as good a state as before such damage occurred.

e. Where the right-of-way of the Project traverses cultivated lands, the Contractor shall limit the movement of his crews and equipment so as to cause as little damage as possible to crops, orchards, or property and shall endeavor to avoid marring the lands. All fences which are necessarily opened or moved during the construction of the Project shall be replaced in as good condition as they were found and precautions shall be taken to prevent the escape of livestock. Except as otherwise provided in the descriptions of underground plowing and trenching assembly units, the Contractor shall not be responsible for loss of or damage to crops, orchards, or property (other than livestock) on the right-of-way necessarily incident to the construction of the Project and not caused by negligence or inefficient operation of the Contractor. The Contractor shall be responsible for all other loss of or damage to crops, orchards, or property, whether on or off the right-of-way, and for all loss of or damage to livestock caused by the construction of the Project.

f. The Project, from the commencement of work to completion, or to such earlier date or dates when the Owner may take possession and control in whole or in part as hereinafter provided shall be under the charge and control of the Contractor and during such period of control by the Contractor all risks in connection with the construction of the Project and the materials to be used therein shall be borne by the Contractor. The Contractor shall make good and fully repair all injuries and damages to the Project or any portion thereof under the control of the Contractor by reason of any act of God or other casualty or cause whether or not the same shall have occurred by reason of the Contractor's negligence.

(i) To the maximum extent permitted by law, Contractor shall defend, indemnify, and hold harmless Owner and Owner's directors, officers, and employees from all claims, causes of action, losses, liabilities, and expenses (including reasonable attorney's fees) for personal loss, injury, or death to persons (including but not limited to Contractor's employees) and loss, damage to or destruction of Owner's property or the property of any other person or entity (including but not limited to Contractor's property) in any manner arising out of or connected with the Contract, or the materials or equipment supplied or services performed by Contractor, its subcontractors and suppliers of any tier. But nothing herein shall be construed as making Contractor liable for any injury, death, loss, damage, or destruction caused by the sole negligence of Owner.

(ii) To the maximum extent permitted by law, Contractor shall defend, indemnify, and hold harmless Owner and Owner's directors, officers, and employees from all liens and claims filed or asserted against Owner, its directors, officers, and employees, or Owner's property or facilities, for services performed or materials or equipment furnished by Contractor, its subcontractors and suppliers of any tier, and from all losses, demands, and causes of action arising out of any such lien or claim. Contractor shall promptly discharge or remove any such lien or claim by bonding, payment, or otherwise and shall notify Owner promptly when it has done so. If Contractor does not cause such lien or claim to be discharged or released by payment, bonding, or otherwise, Owner shall have the right (but shall not be obligated) to pay all sums necessary to obtain any such discharge or release and to deduct all amounts so paid from the amount due Contractor.

(iii) Contractor shall provide to Owner's satisfaction evidence of Contractor's ability to comply with the indemnification provisions of subparagraphs i and ii above, which evidence may include but may not be limited to a bond or liability insurance policy obtained for this purpose through a licensed surety or insurance company.

g. Any and all excess earth, rock, debris, underbrush, and other useless material shall be removed by the Contractor from the site of the Project as rapidly as practicable as the work progresses.

h. Upon violation by the Contractor of any provisions of this section, after written notice of such violation given to the Contractor by the Owner, the Contractor shall immediately correct such violation. Upon failure of the Contractor so to do the Owner may correct such violation at the Contractor's expense.

i. The Contractor shall submit to the Owner monthly reports in duplicate of all accidents, giving such data as may be prescribed by the Owner.

j. The Contractor shall not proceed with the cutting of trees or clearing of right-of-way without written notification from the Owner that proper authorization has been received from the owner of the property, and the Contractor shall promptly notify the Owner whenever any landowner objects to the trimming or felling of any trees or the performance of any other work on his land in connection with the Project and shall obtain the consent in writing of the Owner before proceeding in any such case.

Section 2—Insurance. The Bidder shall take out and maintain throughout the period

of this Agreement the following types and minimum amounts of insurance:

a. Workers' compensation and employer's liability insurance, as required by law, covering all their employees who perform any of the obligations of the contractor, engineer, and architect under the contract. If any employer or employee is not subject to workers' compensation laws of the governing state, then insurance shall be obtained voluntarily to extend to the employer and employee coverage to the same extent as though the employer or employee were subject to the workers' compensation laws.

b. Public liability insurance covering all operations under the contract shall have limits for bodily injury or death of not less than $1 million each occurrence, limits for property damage of not less than $1 million each occurrence, and $1 million aggregate for accidents during the policy period. A single limit of $1 million of bodily injury and property damage is acceptable. This required insurance may be in a policy or policies of insurance, primary and excess including the umbrella or catastrophe form.

c. Automobile liability insurance on all motor vehicles used in connection with the contract, whether owned, nonowned, or hired, shall have limits for bodily injury or death of not less than $1 million each occurrence, and property damage limits of $1 million for each occurrence. This required insurance may be in a policy or policies or insurance, primary and excess including the umbrella or catastrophe form. The Owner shall have the right at any time to require public liability insurance and property damage liability insurance greater than those required in subsection ''b'' and ''c'' of this Section. In any such event, the additional premium or premiums payable solely as the result of such additional insurance shall be added to the Contract price.

The Owner shall be named as Additional Insured on all policies of insurance required in subsections ''b'' and ''c'' of this Section.

The policies of insurance shall be in such form and issued by such insurer as shall be satisfactory to the Owner. The Bidder shall furnish the Owner a certificate evidencing compliance with the foregoing requirements which shall provide not less than (30) days prior written notice to the Owner of any cancellation or material change in the insurance.

Section 3—Bond. If the estimated cost of the construction of a Section shall exceed $100,000, the Contractor agrees to furnish prior to the commencement of such construction, a bond in the penal sum not less than the estimated cost of such Section in the form attached hereto with a Surety or Sureties listed by the United States Treasury Department as acceptable sureties. In the event that the Surety or Sureties on the performance bond delivered to the Owner shall at any time become unsatisfactory to the Owner, the Contractor agrees to deliver to the Owner another or an additional bond.

Section 4—Delivery of Possession and Control to the Owner. Upon written request of the Owner, the Contractor will deliver to the Owner full possession and control of any portion of the Project provided the Contractor shall have been paid at least ninety percent (90%) of the cost of construction of such portion. Upon such delivery of possession and control to the Owner, the risks and obligations of the Contractor as set forth in Section 1f of this Article IV with respect to such portion so delivered to the Owner, shall be terminated; Provided, however, that nothing herein contained shall relieve the Contractor of any liability with respect to defective workmanship as specified in Article 11, Section 4.

Article V—Remedies

Section 1—Completion on Contractor's Default. If default shall be made by the Contractor or by any subcontractor in the performance of any of the terms of this Proposal, the Owner, without in any manner limiting its legal and equitable remedies in the circumstances, may serve upon the Contractor and the Surety, if any, a written notice requiring the Contractor to cause such default to be corrected forthwith. Unless within twenty (20) days after the service of such notice upon the Contractor and the Surety, If any, such default shall be corrected or arrangements for the correction thereof satisfactory to the Owner shall be made, the Owner may take over the construction of the Project and prosecute the same to completion by contract or otherwise for the account and at the expense of the Contractor, and the Contractor shall be liable to the Owner for any cost or expense in excess of the Contract price occasioned thereby. In such event the Owner may take possession of and utilize, in completing the construction of the Project, any materials, tools, supplies, equipment, appliance, and plant belonging to the Contractor or any of its subcontractors, which may be situated at the site of the Project. The Owner in such contingency may exercise any rights, claims, or demands which the Contractor may have against third persons in connection with this Proposal and for such purpose the Contractor does hereby assign, transfer, and set over unto the Owner all such rights, claims, and demands.

Article VI—Miscellaneous

Section 1—Patent Infringement. The Contractor will save harmless and indemnify the Owner from any and all claims, suits, and proceedings for the infringement of any patent or patents covering any equipment used in the work.

Section 2—Permits for Explosives. All permits necessary for the handling or use of dynamite or other explosives in connection with the construction of the Project shall be obtained by and at the expense of the Contractor.

Section 3—Compliance with Statutes and Regulations. The Contractor will comply with all applicable statutes, ordinances, rules, and regulations pertaining to the work. The Contractor acknowledges that it is familiar with the Rural Electrification Act of 1936, as amended, the so-called ''Kick-Back'' Statute (48 Stat. 948), and regulations issued pursuant thereto, and 18 U.S.C. §§287,1001, as amended. The Contractor understands that the obligations of the parties hereunder are subject to the applicable regulations and orders of Governmental agencies having jurisdiction in the premises.

Section 4—Equal Opportunity Provisions. a. Contractor's Representations.

The Contractor represents that:

It has ____, does not have ____, 100 or more employees, and if it has, that it has ____, has not ____, furnished the Equal Employment Opportunity—Employers Information Report EEO–1, Standard Form 100, required of employers with 100 or more employees pursuant to Executive Order 11246 and Title VII of the Civil Rights Act of 1964.

The Contractor agrees that it will obtain, prior to the award of any subcontract for more than $10,000 hereunder to a subcontractor with 100 or more employees, a statement, signed by the proposed subcontractor, that the proposed subcontractor has filed a current report on Standard Form 100. The Contractor agrees that if it has 100 or more employees and has not submitted a report on Standard Form 100 for the current reporting year and that if this Contract will amount to more than $10,000, the Contractor will file such report, as required by law, and notify the Owner in writing of such filing prior to the Owner's acceptance of this Proposal.

b. Equal Opportunity Clause. During the performance of this Contract, the Contractor agrees as follows:

(1) The Contractor will not discriminate against any employee or applicant for employment because of race, color, religion, sex, or national origin. The Contractor will take affirmative action to ensure that applicants are employed, and that employees are treated during employment without regard to their race, color, religion, sex, or national origin. Such action shall include, but not be limited to, the following: Employment, upgrading, demotion or transfer; recruitment or recruitment advertising; layoff or termination; rates of pay or other forms of compensation; and selection for training, including apprenticeship. The Contractor agrees to post in conspicuous places, available to employees and applicants for employment, notices to be provided setting forth the provisions of this Equal Opportunity Clause.

(2) The Contractor will, in all solicitations or advertisements for employees placed by or on behalf of the Contractor, state that all qualified applicants will receive consideration for employment without regard to race, color, religion, sex, or national origin.

(3) The Contractor will send to each labor union or representative of workers, with which it has a collective bargaining agreement or other contract or understanding, a notice to be provided advising the said labor union or workers' representatives of the Contractor's commitments under this section, and shall post copies of the notice in conspicuous places available to employees and applicants for employment.

(4) The Contractor will comply with all provisions of Executive Order 11246 of September 24, 1965, and of the rules, regulations, and relevant orders of the Secretary of Labor.

(5) The Contractor will furnish all information and reports required by Executive Order 11246 of September 24, 1965, and by rules, regulations, and orders of the Secretary of Labor, or pursuant thereto, and will permit access to its books, records, and accounts by the administering agency and the Secretary of Labor for purposes of investigation to ascertain compliance with such rules, regulations, and orders.

(6) In the event of the Contractor's noncompliance with the Equal Opportunity Clause of this Contract or with any of the said rules, regulations, or orders, this Contract may be cancelled, terminated, or suspended in whole or in part, and the Contractor may be declared ineligible for further Government contracts or federally assisted construction contracts in accordance with procedures authorized in Executive Order 11246 of September 24, 1965, and such other sanctions may be imposed and remedies invoked as provided in Executive Order 11246 of September 24, 1965, or by rule, regulation, or order of the Secretary of Labor, or as provided by law.

(7) The Contractor will include this Equal Opportunity Clause in every subcontract or purchase order unless exempted by the rules, regulations, or order of the Secretary of Labor issued pursuant to Section 204 of Executive Order 11246 of September 24, 1965, so that such provisions will be binding upon each subcontractor or vendor. The Contractor will take such action with respect to any subcontract or purchase order as the administering agency may direct as a means of enforcing such provisions, including sanctions for noncompliance: Provided, however, That in the event a Contractor becomes involved in, or is threatened with, litigation with a subcontractor or vendor as a result of such direction by the administering agency, the Contractor may request the United States to

enter into such litigation to protect the interests of the United States.

c. Certificate of Nonsegregated Facilities. The Contractor certifies that it does not maintain or provide for its employees any segregated facilities at any of its establishments, and that it does not permit its employees to perform their services at any location, under its control, where segregated facilities are maintained. The Contractor certifies further that it will not maintain or provide for its employees any segregated facilities at any of its establishments, and that it will not permit its employees to perform their services at any location, under its control, where segregated facilities are maintained. The Contractor agrees that a breach of this certification is a violation of the Equal Opportunity Clause in this Contract. As used in this certification, the term ''segregated facilities'' means any waiting rooms, work areas, restrooms and washrooms, restaurants and other eating areas, timeclocks, locker rooms and other storage or dressing areas, parking lots, drinking fountains, recreation or entertainment areas, transportation, and housing facilities provided for employees which are segregated by explicit directive or are in fact segregated on the basis of race, color, religion, or national origin, because of habit, local custom, or otherwise. The Contractor agrees that (except where it has obtained identical certifications from proposed subcontractors for specific time periods) it will obtain identical certifications from proposed subcontractors prior to the award of subcontracts exceeding $10,000 which are not exempt from the provisions of the Equal Opportunity Clause, and that it will retain such certifications in its files.

Section 5—Franchises and Rights-of-way. The Contractor will be under no obligation to obtain or assist in obtaining any franchises, authorizations, permits, or approvals required to be obtained by the Owner from Federal, State, County, Municipal or other authority; any rights-of-way over private lands or any agreements between the Owner and third parties with respect to the joint use of poles, crossing or any other matter incident to the construction and operation of the Project.

Section 6—Nonassignment of Contract. The Contractor will not assign the Contract effected by an acceptance of this Proposal or any part thereof or enter into any contract with any person, firm or corporation for the performance of the Contractor's obligations thereunder, or any part thereof, without the approval in writing of the Owner.

Section 7—Definitions.

a. The term ''Owner'' shall also include an engineer employed by the Owner, or a firm or engineer retained by the Owner, and designated by the Owner to act in that capacity. The Contractor will be notified in writing by the Owner of those designated to act for the Owner at the time of acceptance of this Proposal.

b. The term ''Completion of Construction'' shall mean full performance by the Contractor of the Contractor's obligations under the contract and all amendments and revisions thereof relating to any Section of the Project or to the Project except the Contractor's obligations in respect of (i) Certificate of Contractor and Indemnity Agreement—Line Extensions under Article III, Section 2 hereof and (ii) the Final Inventory referred to in Article III, Section 1a hereof.

c. The term ''Completion'' shall mean full performance by the Contractor of the Contractor's obligations under the Contract and all amendments and revisions thereof relating to any Section of the Project or to the Project.

Section 8—Extension to Successors and Assigns. Each and all of the covenants and agreements contained in the Contract effected by the acceptance of the Proposal shall extend to and be binding upon the successors and assigns of the parties thereto.

_____ (Contractor)
By _____ (President)
_____ (Address)
Attest: _____(Secretary)
_____ Date of Proposal

This Proposal must be signed with the full name of the Contractor. If the Contractor is a partnership, the Proposal must be signed in the partnership name by a partner. If the Contractor is a corporation, the Proposal must be signed in the corporate name by a duly authorized officer and the corporate seal affixed and attested by the Secretary of the Corporation.

Construction Units—New Construction

Section 1—Pole Units

A pole unit consists of the installation of one pole. The first two digits indicate the length of the pole; the third digit shows the classification per A.S.A. (Example: 25–6 means a pole 25 feet long, class 6.)

Unit No.	Unit labor price

Pole Top Assembly Units

A pole top assembly unit consists of the installation of the hardware, crossarms and their appurtenances, insulators, etc., except tie wire, required to support the primary conductors.

Section A—1 Phase

Unit No.	Unit labor price

SECTION B—V PHASE

Unit No.	Unit labor price

Section C—3 Phase

Unit No.	Unit labor price

Section D—Conductor

A conductor assembly unit consists of the installation of 1,000 feet of conductor or cable for primaries, secondaries or services. Tree trimming necessary for installing services and secondaries on poles not carrying primary line is included with the conductor assembly unit and shall be performed in accordance with the directions of the Owner. The service shall be connected to the secondary or transformer and 2 feet of conductor or cable shall be left for connecting to the consumer's service entrance. In computing the compensation to the Contractor for conductor assembly units only the horizontal distance between conductor supports or pole stales shall be used. The conductor or cable sizes and types listed are the manufacturer's designation.

Unit No.	Unit labor price

Section E—Guy Assembly Units

A guy assembly unit consists of the installation of the hardware and wire, and guy insulator where necessary. An overhead guy assembly unit does not include the associated pole and down guy, each of which is listed separately. Guy guards are designated separately.

Unit No.	Unit labor price

Section F—Anchor Assembly Units

An anchor assembly unit consists of the installation of an anchor with rod complete, ready for attaching the guy wire.

Unit No.	Unit labor price

Section G—Transformer Assembly Units

A transformer assembly unit consists of the installation of the transformer, its protective equipment and its hardware and leads with their connectors and supporting insulators and pins. This unit does not include the installation of the pole top, secondary, service, or grounding assemblies.

Unit No.	Unit labor price

Section J—Secondary Assembly Units

A secondary assembly unit consists of the installation of the hardware, insulators, etc., to support the secondary conductor or cable. It does not include the installation of the secondary conductor or cable, or of any hardware, insulators, etc., required to support service conductors or cable.

Unit No.	Unit labor price

Section K—Service Assembly Units

A service assembly unit consists of the installation of the hardware, insulators, etc. to support the service conductors or cable. It does not include the installation of the service conductor or cable, or of any hardware, insulators etc. required to support secondary conductors or cable.

Unit No.	Unit labor price

Section M—Miscellaneous Assembly Units

A miscellaneous assembly unit consists of the installation of an additional unit needed in the Project for new line construction but not otherwise listed in the Proposal. This section includes the installation of grounding assemblies, fuse cutouts, reclosers, sectionalizers, switches, capacitors, regulators, metering and other assembly units.

Unit No.	Unit labor price

Section R—Right-of-Way Clearing Units

R1–10. The unit is 1,000 feet in length and 10 feet in width (to be measured on one side of the pole line) of actual clearing of right-of-way. This includes clearing of underbrush, tree removal, and such tree trimming as is required so that the right-of-way, except for tree stumps which shall not exceed ____ in height, shall be clear from the ground up on one side of the line of poles carrying primary conductors.

This unit does not include clearing or trimming associated with secondaries or services which is included with conductor units. The length of actual clearing shall be measured in a straight line parallel to the horizontal line between stakes and across the maximum dimension of foliage cleared projected to the ground line. All trees and underbrush across the width of the right-of-ways as designated by the Owner shall be

considered to be grouped together as a single length in measuring the total length of clearing. Spaces along the right-of-way in which no trees are to be removed or trimmed or underbrush cleared shall be omitted from the total measurement. All length thus arrived at, added together and divided by 1,000, shall give the number of 1,000-foot R1–10 units of clearing. This unit includes the removal or topping, at the option of the Contractor, of danger trees outside of the right-of-way when so designated by the Owner. (Danger trees are defined as dead or leaning trees which, in falling, will affect the operation of the line.)

The Contractor shall not remove or trim shade, fruit, or ornamental trees unless so directed by the Owner.

R1–20. This unit is identical with R1–10 except that width is 20 feet (to be measured 10 feet on each side of the pole line).

R1–30. This unit is identical with R1–10 except that width is 30 feet (to be measured 15 feet on each side of the pole line).

R1–40. This unit is identical with R1–10 except that width is 40 feet (to be measured 20 feet on each side of the pole line).

RC1–10, RC1–20, RC1–30, RC1–40. These units are identical to the respective R1 units except that chemical treatment of stumps is required in addition to the clearing of underbrush, tree removal and tree trimming.

Additional Requirements (When specifying R1 units denote type of disposal (A or B).)

A. Trees, brush, branches and refuse shall, without delay, be disposed of by such of the following methods as the Owner will direct (Owner to strike out methods not to be used):

1. Burned.
2. Piled on one side of right-of-way.
3. Roller chopped and left on right-of-way in such a manner as not to obstruct roads, ditches, drains, etc.
4. Other (describe) ____.

B. Trees that are felled shall be cut to commercial wood lengths, stacked neatly, and left on the right-of-way for the landowner. Commercial wood length means the length designated by the Owner but in no case shall it be required to be less than ____ (____) feet. Brush, branches, and refuse shall, without delay, be disposed of by such of the following methods as the Owner will direct (Owner to strike out methods not to be used):

1. Burned.
2. Piled on one side of right-of-way.
3. Roller chopped and left on right-of-way in such a manner as not to obstruct roads, ditches, drains, etc.
4. Other (describe)____.

Unit No.	Unit labor price

Section S—Substation Assembly Units

A substation assembly unit consists of the complete substation ready for connection of the line conductors, as shown on the substation drawings attached.

Unit No.	Unit labor price

Section UD—Underground Cable Assembly Units

An underground cable assembly unit consists of the installation of 1,000 feet of cable for underground primaries, secondaries or services. It does not include the plowing, trenching and backfilling, or the termination of the primary cable which are provided for in other assembly units. It includes the labor for the termination, connection and sealing of secondary and service cables and conductors as shown in the specifications and construction drawings, and the labor for making all primary, secondary and service cable splices (buried cable may be spliced only when and where permitted by the Owner[1,2].) In computing the compensation to the Contractor for underground cable assembly units, only the distance between stakes, paralleling the cable shall be used. The number of units so computed includes all installation of cable in all specified trenches, risers, conduits, crossings, manholes, transformers, terminal housings and meter boxes [3]. The conductor or cables listed are the manufacturer's designation of types, size, voltage rating and material. The Contractor and the Owner shall jointly perform cable acceptance tests on installed cable in accordance with the specifications using test equipment furnished by the ____ (Owner to insert Owner or Contractor).

Unit No.	Unit labor price

Section UG—Underground Transformer Assembly Units

An underground transformer assembly unit consists of the installation of the transformer, its housing, warning sign, switches, over-current protective devices, grounding loop, and its hardware and leads with their connectors and supporting insulators. This unit also includes the installation of primary

[1] ____ Owner check here if primary splices are permitted.

[2] ____ Owner check here if secondary and service splices are permitted.

[3] ____ Owner check here if 12 feet of service conductor is to be left as a coil 3 feet from the building with ends capped instead of connection to meter box.

cable terminations but not of lightning arresters, fault indicators or ground rods, nor does it include any trenching. For pad-mount transformers, it does not include installation of the pad, drainable material, backfilling, compaction, or site preparation which are included in the pad assembly units. For submersible transformers it includes the installation of cable terminations, of the enclosure and cover, of drainable material (when specified[4]) and the excavation.

Unit No.	Unit labor price

Section UK—Underground Secondary and Service Assembly Units

An underground secondary and service assembly unit consists of the installation of the secondary or service cable terminal housing. It includes the installation of the power pedestal, stake (when required), mounting hardware, warning sign, directional marker, housing identification marking, and the cable identification tags. It does not include the installation of the cable terminations, ground rod, or pad, when required.

Unit No.	Unit labor price

Section UM—Miscellaneous Underground Assembly Units

A miscellaneous underground assembly unit consists of the installation of an additional unit needed in the Project for new construction, but not otherwise listed in the Proposal. This section includes the installation of the miscellaneous assembly units as shown on the respective underground construction drawings. Where miscellaneous units consist of or include the installation of a primary cable termination, the unit includes the preparation of the cable to accommodate the termination, the installation of the stress cone, and the connection of the cable to the terminal equipment. Pad assembly units are in this section and include the installation of the bedding, drainable material (when specified), cable slot, and site preparation, backfilling and tamping.

Unit No.	Unit labor price

Section UR—Underground Excavation Assembly Units

UR1–S (D) Plowing Assembly Unit, Soil—Consists of one (1) lineal foot of plowing in soil, measured parallel to the surface of the ground, to a specified depth (D), in inches, including the compacting, except as specifically provided for in other units. This unit includes all labor required in the repair and/or replacement of streets, roads, drives, fences, lawns, shrubbery, watermains, pipes, pipelines and contents, underground power and telephone facilities, buried sewerage and drainage facilities, and any other property damaged during the plowing of the cable, except as specifically provided for in other units.

NOTE: Where in the judgment of the Owner greater than normal difficulty will be involved in plowing because of the presence of underground facilities of other utilities, this unit will be suffixed by the letter ''T''. This will be applicable only in those areas predesignated by the Owner on the detail maps herein. All plowing outside of the predesignated area on the map, regardless of the difficulty in placement actually experienced, will be inventoried as the regular UR1–S (D) units. If field conditions show the existence of rock to prevent the placing of the cable in soil to the depth required in the specifications the Owner may specify UR2–R units. Where more than one cable is to be installed in the slot, the UR1–S unit designation should be modified by a suffix corresponding to the number of cables installed. For example, UR1–S (D) 3c for 3 cables plowed at one time.

UR2–S (D&W) Trenching Assembly Unit, Soil—Consists of one (1) lineal foot of trenching in soil, measured parallel to the surface of the ground, to a specified depth (D) and width (W), in inches, including the excavation, and backfilling and compacting. This unit includes all labor required in the repair and/or replacement of streets, roads, drives, fences, lawns, shrubbery, watermains, pipes, pipelines and contents, underground power and telephone facilities, buried sewerage and drainage facilities, and any other property damaged by the trenching, except as specifically provided for in other units.

NOTE: Where in the judgment of the Owner greater than normal difficulty will be involved in trenching because of the presence of underground facilities of other utilities, this unit will be suffixed by the letter ''T''. This will be applicable only in those areas predesignated by the Owner on the detail maps herein. Where more than one cable is to be installed in the trench, the regular UR2–S unit designation should be modified by a suffix corresponding to the construction drawing for the type of cable placement desired.

UR2–R (D&W) Trenching Assembly Unit, Rock—Consists of one (1) lineal foot of trenching in rock, measured parallel to the surface of the ground, to specified depth (D)

[4] ____ Owner check here if drainable material is specified.

and width (W), in inches, including the excavation, and backfilling and compacting to place cable to the depth specified in the Specifications. This unit will be specified by the Owner only when field conditions at the site show the existence of rock at a depth preventing the placing of the cable in soil to the depths required in the Specifications. This unit includes all labor required in the repair and/or replacement of streets, roads, drives, fences, lawns, shrubbery, watermains, pipes, pipelines and contents, underground power and telephone facilities, buried sewerage and drainage facilities, and any other property damaged by the trenching, except as specifically provided for in other units. This unit does not include underground cable facilities installed in the trench or cable bedding assembly units, when required.

UR–3 Cable Bedding Assembly Unit—Consists of the installation of one (1) lineal foot of a 2-inch bed of clean sand or soil placed in the trench under the cable and a 4-inch layer of clean sand or soil backfill over the cable to the width of the trench.

NOTE: The exact location and number of units shall be determined by the Owner after the trenches are open in those areas where rock or other conditions make special bedding necessary.

UR–4a Pavement Assembly Unit, Asphalt—Consists of the labor necessary to remove and restore one (1) lineal foot of asphalt pavement, measured along the route of the cable, including any trenching necessary to place the cable at the required depth. All work shall be performed in accordance with the requirements of State or local authorities.

UR–4c Pavement Assembly Unit, Concrete—Consists of the labor necessary to remove and restore one (1) lineal foot of concrete pavement, measured along the route of the cable, including any trenching necessary to place the cable at the required depth. All work shall be performed in accordance with the requirements of State or local authorities.

UR–5 ( ) Underground Pipe Crossing Assembly Unit—Consists of the installation of one (1) lineal foot of steel pipe, of the inside diameter, in inches, specified in the last digit of the assembly unit designation, installed in place. This unit includes the pushing of pipe and any excavation, backfilling and tamping necessary for the installation of the pipe. The pipe will be installed at the depth specified by the Owner. The installation of underground cable in the pipe is not included in this unit.

UR6 Underground Nonpipe Crossing Assembly Unit—Consists of the labor in providing a hole in soil one (1) foot in length of a diameter sufficient to accommodate the cable to be installed therein. The depth of the hole below the surface of the ground shall be specified by the Owner. This unit includes any excavation, backfilling and tamping necessary for the installation. This unit may be used where the permanent installation of a steel pipe under the UR–5 unit is not required. The installation of underground cable in the pipe is not included in this unit.

Unit No.	Unit labor price

Construction Units—Line Changes

The general heading of Line Changes applies to the changing of existing lines or portions thereof from their existing phasing, wire size, and type to new phasing, wire size, and type and the removal of existing lines or portions thereof and replacing with new lines in close proximity thereto. In general line changes involve three types of assembly units as follows:

Section H—Conversion assembly units;

Section I—Removal assembly units;

Section N—New construction assembly units on existing lines or in replacing lines.

The assembly units that are included in Sections H, I, and N are defined by symbols and descriptions which follow together with the applicable descriptions included under New Construction. Where the descriptions are not correct or sufficiently explicit, or when special units are not covered by Construction Drawings, descriptions have been provided by the Owner in the respective sections.

Work included in these sections shall be performed under a schedule of deenergization and operating procedures as set forth by the Owner at the time of release of any Section involving work on existing lines.

The Contractor will so plan and perform its work that it will be possible to safely reenergize all lines involved at the expiration of the time limits set up in the schedule to resume service to all consumers being served prior to deenergization. Prior to commencement of work each day on lines to be deenergized, and upon completion of work each day on such lines, the Contractor will notify the Owner thereof in writing or in such other manner as the circumstances permit.

Section H—Conversion Assembly Units

Conversion assembly units are pole-top assemblies and cover the furnishing of all labor for changing an existing assembly unit to a new assembly unit, utilizing certain items of materials of the existing assembly unit on poles to be left in place. Any materials removed from the existing assembly units which are not required in the construction of the conversion assembly unit are to be reused by the Contractor in the construction

of other assembly units, or returned to Owner's warehouse, as directed by the Owner. Conversion assembly units are specified by the prefix H with the new construction assembly unit designation shown first and the existing assembly unit designation shown last. For example, an H B1–A1 signifies the conversion of an existing A1 assembly unit to a B1 assembly unit (as was defined in the description of construction assembly units). In this instance the Contractor utilizes the existing pin-type insulator, single upset bolt and neutral spool and installs the additional crossarm, crossarm pins, braces, machine bolt, carriage bolts, lag screw, and insulator supplied by the Owner required for the new unit. The Contractor transports the pole-top pin and two machine bolts to the warehouse or uses them on the Project as directed by the Owner.

The Conversion assembly units also include the furnishing of all labor in the transferring, resagging and retying of conductors from one position on the pole to a different position on the pole where such transfers are required. Where replacement of conductor is required, the existing conductor will be removed under Section I and the new conductor installed under Section N.

Where replacement of a pole is required, the existing pole and pole-top assembly will be removed under Section I and the new pole and pole-top assembly will be installed according to Section N and no H units will be involved.

Conversion assemblies are listed in three subsections for converting pole-top assemblies from single to V phase, single to three phase, and V to three phase. The following descriptions apply to only those conversion units not sufficiently explicit:

Unit	Description

Subsection H (B–A)—1 Phase to V Phase

Unit No.	Unit labor price

Subsection H (C–A)—1 Phase to 3 Phase

Unit No.	Unit labor price

Subsection H (C–B)—V Phase to 3 Phase

Unit No.	Unit labor price

Section I—Removal Assembly Units

Removal assembly units cover the furnishing of all labor for the removal of existing units of construction from existing lines, disassembling into material items, and all labor and transportation for the returning of all materials to the warehouse of the Owner in an orderly manner or transporting elsewhere to the site of the Project for reuse in the prosecution of this Contract as directed by the Owner.

The unit removal prices shall include all labor required to reinstall in accordance with specifications any conductors temporarily detached. The Contractor will reinstall at his own expense any other units removed by him for his own convenience.

The removal units are specified by the prefix I and followed by the assembly unit designation of existing assembly unit to be removed. For example, an I–A1 signifies the removal of an A1 assembly unit. The following special notes apply to specific removal units:

a. Poles. All poles of the same height, regardless of pole class, are designated by the same unit. Thus an I–30-foot pole signifies the removal of a 30-foot pole of any class. The Contractor is not required under this unit to remove from the pole any ground wire or pole numbering attached to the pole. This unit includes the refilling and tamping of holes in a workmanlike manner unless they are to be reused.

b. Pole-top Assemblies. The unit of removal of pole-top assemblies includes, in addition to the removal of the assembly itself, any necessary handling, resagging, and retying of conductors in those cases where an existing pole-top assembly will be removed and replaced by a new pole-top assembly and where any existing conductor is to be reused.

The unit of removal of pole-top assemblies also includes any holding or handling of mainline or tap conductors at tap lines, angles, and deadends where such is involved, and the reinstalling of such conductor in accordance with the Specifications; for example, an I–A5–4 will include the disconnection of the tap conductors, snubbing off the tap line at the nearest practical point and the reconnection and resagging of these tap conductors if necessary to the new tap assembly when installed. The new unit of construction, however, will be specified separately in Section N.

c. Conductor. The conductor removal unit covers the removal of 1,000 feet of conductor or cable and reeling or coiling it in a workmanlike manner in such a way that it can be reused by the Contractor or the Owner. The Owner will furnish to the Contractor reels if it is to be returned to the Owner's warehouse on reels. The removal unit for each size of conductor or cable is shown by the prefix I followed by D and the conductor or cable type; thus an I–D 6ACWC signifies the removal unit for 1,000 feet of 6 A Copperweld-copper conductor.

d. Guys. All guys regardless of length, type of attachment, or size of guy strand are specified by the same unit; thus an I–E signifies the removal of any guy.

e. Anchors. Only anchor rods are to be removed by the Contractor in anchor removal units. The anchors will be left in the ground; thus an I–F signifies the removal of any anchor rod. If the rod cannot be unscrewed, the end of the rod shall either be cut off or bent down so that the rod will be at least 18 inches below ground.

f. Transformers. The unit for removal of transformer assembly units is divided into two sections, (1) Conventional Transformer Assembly, and (2) Self-protected Transformer Assembly. Only one unit is specified for each type, and all sizes of transformers from 1 to 15 kVA within each group will be covered by the same unit. ''Self-protected'' refers to transformers where all protective equipment is mounted on or within the transformer. ''Conventional'' refers to transformers where protective equipment is mounted separately from the transformer. The unit is designated by the prefix I followed by the description of the unit to be removed; thus, I–G Conventional signifies the removal of a conventional transformer assembly for any size transformer from 1 to 15 kVA.

g. Secondary Units. The unit for removal of secondary assemblies includes, in addition to the removal of the assembly itself, all necessary handling such as untying, resagging, and retying of secondary conductor or cables where existing secondary conductor or cable is to be reused.

In addition, the unit for removal of the secondary assembly includes the handling or holding of any conductor at tap lines where such is involved, and the reinstalling of such tap conductor in accordance with the Specifications.

h. Service Unit. The unit for removal of service assemblies includes, in addition to the removal of the assembly itself, all necessary handling such as untying, resagging, and retying of service conductor or cable where existing service conductor or cable is to be reused.

The following descriptions apply only to those removal units not sufficiently explicit:

Unit	Description

Unit No.	Unit labor price

Section N—New Assembly Units

The purpose of this section is to list complete new units of construction where such units are to be added to existing lines or installed in replacing lines.

The units as covered by this section are the same as the units described in Construction Units—New Construction, except that these units are prefixed by the letter N.

For example, an N40–6 unit covers the furnishing of all labor for the installation of a 40–6 pole either in an existing distribution line being operated by the Owner or in a new line being constructed to replace an existing distribution line being operated by the Owner.

The following descriptions apply only to those new units not sufficiently explicit:

Unit	Description

Unit No.	Unit labor price

Acceptance

The undersigned hereby accepts the foregoing Proposal of ____, dated ____, to construct the rural electric Project ____19____ Line Extensions.

____ (Owner)
By ____ President
____ Secretary
____ Date of Contract

[End of clause]

§1726.344 [Reserved]

§1726.345 Certificate of contractor and indemnity agreement (line extensions), RUS Form 792b.

The closeout form in this section shall be used when required by this part.

Certificate of Contractor and Indemnity Agreement (Line Extensions)

____, certifies that he is the ____ (title or designation), of ____ (name of contractor), the Contractor, in a contract dated ____ 19____ entered into between the Contractor and ____ (name of RUS Borrower) ____, the Owner, for the construction of a rural electric Project (hereinafter referred to as Project), which bears the Project Designation ____ 19____ Line Extensions, and that he is authorized to and does make this Certificate and Indemnity Agreement on behalf of said Contractor in order to induce the Owner to make payment to the Contractor, in accordance with the provisions of the said contract.

Undersigned further says that all persons who have furnished labor in connection with the Section of the Project represented by the Final Inventory dated ____, in the amount of $____, have been paid in full; that all manufacturers, materialmen and subcontractors

which furnished any materials or services, or both, for the said Section of the Project have been paid in full; that no lien has been filed against the Project and no person has any right to claim any lien against the Project.

Undersigned further says that if the Owner pays the Contractor the contract price for the said Section of the Project the Contractor will indemnify and hold harmless and does hereby undertake and agree to indemnity and hold harmless the Owner from any claim or lien arising out of the negligence or other fault of the Contractor in respect of the performance of the contract which may have been or may be filed against the Owner.

___ Signature of Contractor (President, Vice-President, Partner or Owner, or, if signed by other than one of foregoing, Power of Attorney signed by one of the foregoing should be attached. Indicate applicable designation.)

[End of clause]

§ 1726.346 Supplemental contract for additional project, RUS Form 792c.

The form in this section shall be used when required by RUS Form 201, 790, or 792.

SUPPLEMENTAL CONTRACT FOR ADDITIONAL PROJECT

Date ___

To: ___ Contractor

Pursuant to Article I, Section 2 of the Contractor's Proposal dated ___, for the rural electric Project ___, we request that you construct Additional Project No. ___, consisting of approximately the following system improvement and line extension work: ___.

The Additional Project is to be constructed in accordance with all of the provisions of the Contractor's Proposal, except:

1. The time for completion of the Additional Project shall be ___

2. The prices for Construction Units for the Additional Project are attached.

Please indicate your acceptance of the foregoing by signing below, return two signed copies and retain one copy.

Sincerely,

___ Owner

By ___ President, Vice President (strike out inapplicable designation.)

Acceptance:

___ Contractor

By ___ President, Vice President, Partner (strike out inapplicable designation.)

Date ___

[End of clause]

§§ 1726.347—1726.350 [Reserved]

§ 1726.351 Electric system construction contract (labor and materials), RUS Form 830.

The contract form in this section shall be used when required by this part. This form refers to guide drawings, which do not contain requirements, and, hence, are not included in this part. The guide drawings are included in the printed form available from GPO (See § 1726.300.).

ELECTRIC SYSTEM CONSTRUCTION CONTRACT (LABOR AND MATERIALS)

Notice And Instructions To Bidders

1. Sealed proposals for the construction, including the supply of necessary labor, materials and equipment, of a rural electric project of ___ (hereinafter called the ''Owner'') to be known as ___ Project will be received by the Owner on or before ___ o'clock ___ M., ___, 19___, at its office at ___ at which time and place the proposals will be publicly opened and read. Any proposals received subsequent to the time specified will be promptly returned to the Bidder unopened.

2. Description of Project: The Project will consist of approximately:

Overhead Distribution Line Construction

___ miles of ___ kV Single Phase Lines
___ miles of ___ kV V-Phase Lines
___ miles of ___ kV Three-Phase Lines
___ miles of secondary on secondary poles
___ miles of services for ___ consumers

Underground Distribution Facilities

___ miles of ___ kV Single-Phase Construction
___ miles of ___ kV V-Phase Construction
___ miles of ___ kV Three-Phase Construction
___ miles of ___ Volt Secondary and Service Construction for ___ Consumers.

Distribution Line Changes, Conversion, and Removal

___ miles of ___

Transmission Line Construction

___ miles ___ kV; ___ miles ___ kV
___ miles ___ kV underbuild

Substations and Other Major Facilities

___ kVA ___ Voltage ___ Name

This Project is located in ___ Counties, in the State(s) of ___ all as more fully described in the Plans, Specifications, Construction Drawings, and Contractor's Proposal therefore hereinafter referred to.

3. Work on Energized Lines. Unless stated below all construction work including attachments to existing poles and line changes, is to be done with the line deenergized. The hours during which existing lines will be deenergized are shown in the Contractor's Proposal. Approximately ___ miles of the line changes are to be made with the lines energized and such lines are in the following locations or areas: ___ and are more fully described in the Plans, Specifications, and Contractor's Proposal. For work in these locations the Bidder must provide personnel capable of working on energized lines. All such work shall be performed to meet at least the safety rules and regulations prescribed by the Owner for its own employees including the use of rubber gloves, hot sticks and associated protective equipment, a copy of which rules and regulations may be examined at the office of the Owner.

4. Owner-Furnished Materials. The unit prices in the Contractor's Proposal should include provisions for Owner-Furnished Materials since as stated in Article I, Section 3 of the Contractor's Proposal, the value of the Owner-Furnished Materials, if any, will be deducted from payments to the Bidder for completed Construction Units.

5. Obtaining Documents. The Plans, Specifications and Construction Drawings, together with all necessary forms and other documents for bidders may be obtained from the Owner, or from the Engineer ___ at the latter's office at ___ upon the payment of $___, which payment will not be subject to refund. The Plans, Specifications, and Construction Drawings may be examined at the office of the Owner or at the office of the Engineer. A copy of the Loan Contract (if the Project is to be financed, in whole or in part, pursuant to a loan contract) between the Owner and the United States of America acting through the Administrator of the Rural Utilities Service and of the loan contract between the Owner and any other lender may be examined at the office of the Owner. Each set of Plans, Specifications and Construction Drawings will have a serial number, given by the Engineer, and the number of each set with the name of the purchaser will be recorded by the Engineer. Bids will be accepted only from the original purchaser.

6. Manner of Submitting Proposals. Proposals and all supporting instruments must be submitted on the forms furnished by the Owner and must be delivered in a sealed envelope addressed to the Owner. The name and address of the Bidder, its license number if a license is required by the State, and the date and hour of the opening of bids must appear on the envelope in which the Proposal is submitted. Proposals must be filled in in ink or typewritten. No alterations or interlineations will be permitted, unless made before submission, and initialed and dated.

7. Familiarity with Conditions. Prior to the submission of the Proposal the Bidder shall make and shall be deemed to have made a careful examination of the site of the Project and of the Plans, Specifications, Construction Drawings, and forms of Contractor's Proposal and Contractor's Bond on file with the Secretary of the Owner and with the Engineer, and shall become informed as to the location and nature of the proposed construction, the transportation facilities, the kind and character of soil and terrain to be encountered, the kind of facilities required before and during the construction of the Project, general local conditions and all other matters that may affect the cost and time of completion of the Project. Bidders will be required to comply with all applicable statutes, regulations, etc., including those pertaining to the licensing of contractors, and the so-called ''Kick-Back Statute'' (48 State. 948) and regulations issued pursuant thereto.

8. Proposals will be accepted only from those prequalified bidders invited by the Owner to submit a proposal.

9. Alternate Designs. The Owner reserves the right to confine its consideration of the several bids to one type of design regardless of alternate types of design which may be specified in the Plans and Specifications and offered in the Proposals.

10. Proposals for Distribution and Transmission Facilities. If the Project includes both distribution and transmission facilities, bidders shall bid on both of the facilities and the Owner will evaluate the Proposals on the basis of low total bid for both facilities.

11. The Time for Completion of Construction of the Project shall be as specified by the Engineer in the Proposal.

12. Bid Bond. Each Proposal must be accompanied by a Bid Bond in the form attached or a certified check on a bank that is a member of the Federal Deposit Insurance Corporation, payable to the order of the Owner, in an amount equal to ten percent (10%) of the maximum bid price. Each Bidder agrees, provided its Proposal is one of the three low Proposals, that, by filing its Proposal together with such Bid Bond or check in consideration of the Owner's receiving and considering such Proposals, said Proposal shall be firm and binding upon each such Bidder and such Bid Bond or check shall be held by the Owner until a Proposal is accepted and a satisfactory Contractor's Bond is furnished (where required) by the successful Bidder and such acceptance has been approved by the Administrator, or for a period not to exceed sixty (60) days from the date hereinbefore set for the opening of Proposals, whichever period shall be the shorter. If such

Proposal is not one of the three low Proposals, the Bid Bond or check will be returned in each instance within a period of ten (10) days to the Bidder furnishing same.

13. Contractor's Bond. The successful Bidder will be required to execute two additional counterparts of the Proposal and, for a Contract in excess of $100,000, to furnish a Contractor's Bond in triplicate in the form attached hereto with sureties listed by the United States Treasury Department as Acceptable Sureties, in a penal sum not less than the contract price.

14. Failure to Furnish Contractor's Bond. Should the successful Bidder fail or refuse to execute such counterparts or to furnish a Contractor's Bond (where required) within ten (10) days after written notification of the acceptance of the Proposal by the Owner, the Bidder will be considered to have abandoned the Proposal. In such event, the Owner shall be entitled (a) to enforce the Bid Bond in accordance with its terms, or (b) if a certified check has been delivered with the Proposal, to retain from the proceeds of the certified check, the difference (not exceeding the amount of the certified check) between the amount of the Proposal and such larger amount for which the Owner may in good faith contract with another party to construct the Project. The term ''Successful Bidder'' shall be deemed to include any Bidder whose Proposal is accepted after another Bidder has previously refused or has been unable to execute the counterparts or to furnish a satisfactory Contractor's Bond (where required.)

15. Contract is Entire Agreement. The Contract to be effected by the acceptance of the Proposal shall be deemed to include the entire agreement between the parties thereto, and the Bidder shall not claim any modifications thereof resulting from any representation or promise made at any time by any officer, agent or employee of the Owner or by any other person.

16. Minor Irregularities. The Owner reserves the right to waive minor irregularities or minor errors in any Proposal, if it appears to the Owner that such irregularities or errors were made through inadvertence. Any such irregularities or errors so waived must be corrected on the Proposal in which they occur prior to the acceptance thereof by the Owner.

17. Balanced Bid. The Owner reserves the right to reject any or all Proposals. The attention of Bidders is specially called to the desirability of a proper balance between prices for labor and materials and between the total prices for the respective Construction Units. Lack of such balance may be considered as a reason for rejecting a Proposal.

18. Discrepancy in Unit Prices. Where the unit prices in the Contractor's Proposal are separated into three columns designated as ''Labor,'' ''Materials,'' and ''Labor and Materials,'' and where a discrepancy appears between the sum shown in the ''Labor and Materials'' column and the correct addition of the sums appearing in the ''Labor'' column and the ''Materials'' column, the correct addition of the sums appearing in the ''Labor'' column and the ''Materials'' column shall control.

19. Definition of Terms. The terms ''Administrator,'' ''Engineer,'' ''Supervisor,'' ''Project,'' ''Completion of Construction,'' and ''Completion of the Project'' as used throughout this Contract shall be as defined in Article VI, Section 1, of the Contractor's Proposal.

20. The Owner Represents: a. If by provisions of the Contractor's Proposal the Owner shall have undertaken to furnish any materials for the construction of the Project, such materials are on hand at locations specified or if such materials are not on hand they will be made available by the Owner to the successful Bidder at the locations specified before the time such materials are required for construction.

b. All easements and rights-of-way, except as shown on maps included in the Plans and Specifications, have been obtained from the owners of the properties across which the Project is to be constructed (including tenants who may reasonably be expected to object to such construction). The remaining easements and rights-of-way, if any, will be obtained as required to avoid delay in construction.

c. All staking, except as shown on the maps included in the Plans and Specifications, has been completed and sufficient staking crews will be available to maintain stakes at all times in advance of construction.

d. Where underground distribution construction is required, permission has been obtained from state and local highway and road authorities to install underground distribution power facilities and set pedestals, if any, on the highway and road right-of-way in the Project area. Notwithstanding such permission granted to the Owner, each Bidder is responsible for ascertaining that the equipment, methods of construction, and repair proposed to be used on the Project will meet all requirements of public authorities having jurisdiction over highway and road right-of-way. The successful Bidder will be required to furnish proof satisfactory to the Owner of compliance with this requirement. If required by highway or road authorities, the successful Bidder will furnish to such authorities a bond or meet other guaranty requirements to assure the prompt repair of all damages to highways and roads and their associated rights-of-way caused by the Bidder during construction of the Project. This requirement is in addition to and independent of the Contractor's Bond required under this Contract. The acceptance of a bid from any

Bidder is not to be construed as approval of the Bidder's equipment or proposed construction methods by or on behalf of the highway and road authorities. Bidders may obtain information concerning the requirements of highway and road authorities by communicating with the following ____.

e. All funds necessary for prompt payment for the construction of the Project will be available. If the Owner shall fail to comply with any of the undertakings contained in the foregoing representation or if any of such representations shall be incorrect, the Bidder will be entitled to an extension of time of completion for a period equal to the delay, if any, caused by the failure of the Owner to comply with such undertakings or by any such incorrect representation; provided the Bidder shall have promptly notified the Owner in writing of its desire to extend the time of completion in accordance with the foregoing; provided, however, that such extension, if any, of the time of completion shall be the sole remedy of the Bidder for the Owner's failure, because of conditions beyond the control and without the fault of the Owner, to furnish materials in accordance with subparagraph a. above.

Owner ____
By ____
____. 19____

Contractor's Proposal

(Proposal shall be submitted in ink or typewritten)

To: ____ (hereinafter called the ''Owner'')

Article I—General

Section 1. Offer to Construct. The undersigned (hereinafter called the ''Bidder'') hereby proposes to receive and install such materials and equipment as may hereinafter be specified to be furnished by the Owner, and to furnish all other materials and equipment, all machinery, tools, labor, transportation and other means required to construct the rural electric project ____ in strict accordance with the Plans, Specifications and Construction Drawings for the prices hereinafter stated.

The total length of the project lines shall be determined by taking the sum of all straight horizontal span distances between pole stakes or from center to center of poles, or centerline of structures, carrying conductors, plus the length of service drops, if any, measured horizontally from center of last pole to the point of attachment to the consumer's building.

Section 2. Materials and Equipment. The Bidder agrees to furnish and use in the construction of the Project under this Proposal, in the event the Proposal is accepted, only such ''fully listed'' and ''conditionally listed'' materials and equipment as are included in the current ''List of Materials Acceptable for Use on Systems of RUS Electrification Borrowers,'' including revisions adopted prior to the Bid Opening. The use of ''conditionally listed'' materials and equipment requires prior consent by the Owner or Engineer. For distribution lines, the Bidder further agrees to furnish and use guy wire with ASTM Class ____ (Engineer to insert A or B) zinc coating.

All leads on equipment such as transformers, reclosers, etc., shall be of #6 minimum copper conductivity using ____ (Engineer to insert standard soft drawn copper or aluminum alloy) conductor. All conductor ties on insulators shall be of the materials and methods shown in the following Tying Guide Drawings: ____ (Engineer to insert appropriate drawing numbers).

Ground rods and butt-type pole grounding plates shall be ____ (Engineer to insert galvanized steel or copper).

Underground primary cable shall have ____ coated copper neutral (Engineer to insert round or flat).

For transmission lines, the Bidder further agrees to furnish and use guy wire, overhead ground wire, and pole ground wire with ASTM Class ____ (Engineer to insert A, B, or C) zinc coating. Guy wire shall be the same size and grade as the overhead ground wire. Where overhead ground wire is not specified, the guy wire shall be ____ size, ____ grade.

The Bidder further agrees to furnish and use poles, crossarms, and other timber products, of which the physical characteristics, method of treatment, type of preservative, instructions on inspection and general procedure shall be in accordance with RUS standards and requirements.

Crossarms shall be ____ (Engineer to insert Douglas fir or Southern Yellow Pine), treated with ____ (Engineer to insert type of preservative.)

The Bidder agrees that the prices for poles, crossarms, and other timber products set forth herein shall include the cost of preservative treatment and inspection, insured warranty, or quality assurance. The Bidder further agrees to obtain from the supplier inspection and treatment reports or insured warranties, for checking against the delivered timber, and to submit such reports or warranties to the Owner as one of the prerequisites to monthly and final payments.

Section 3. Owner-Furnished Materials. The Bidder understands and agrees that, if this Proposal is accepted, the Owner will furnish to the Bidder the material set forth in the attached ''List of Owner's Materials on Hand'' (see page ____) and the Bidder will give a receipt (see page ____) therefore in writing to the Owner. The Bidder, further, will on behalf of the Owner accept delivery of such of the materials set forth in the attached ''List of Materials Ordered by Owner but Not Delivered'' (see page ____) as may be subsequently delivered and will promptly

forward to the Owner for payment the supplier's invoice, together with the Bidder's receipt in writing for such materials. The materials referred to are on hand at, or will be delivered to, the locations specified in the List and the Bidder will use such materials in constructing the Project.

The value of the completed Construction Units certified by the Bidder each month pursuant to Article III, Section 1.a of the Proposal shall be reduced by an amount equal to the value of the materials installed by the Bidder during the preceding month which have been furnished by the Owner or the delivery of which has been accepted by the Bidder on behalf of the Owner. Only ninety percent (90%) of the remainder shall be paid prior to the Completion of the Project. The value of such materials shall be computed on the basis of the unit prices stated in the Lists. Materials, if any, not required for the Project, which have been furnished to the Bidder by the Owner or delivery of which has been accepted by the Bidder on behalf of the Owner, shall be returned to the Owner by the Bidder upon completion of construction of the Project. The value of all materials not installed in the Project nor returned to the Owner shall be deducted from the final payment to the Bidder.

The Owner shall not be obligated to furnish materials in excess of the quantities, size, kind and type set forth in the attached Lists. If the Owner furnishes, and the Bidder accepts, materials in excess thereof, the values of such excess materials shall be their actual cost as stated by the Owner.

Information on the shipping schedules of materials on the ''List of Materials Ordered by Owner But Not Delivered'' will be furnished to the Bidder as necessary during progress of the work. Upon delivery the Bidder shall promptly receive, unload, transport and handle all materials and equipment on the ''List of Materials Ordered by Owner But Not Delivered'' at its expense and shall be responsible for demurrage, if any.

Section 4. Purchase of Materials Not Furnished By Owner. The Bidder will purchase all materials and equipment (other than Owner-furnished materials) outright and not subject to any conditional sales agreements, bailment, lease or other agreement reserving unto the seller any right, title or interest therein.

Section 5. Proposal on Unit Basis. The Bidder understands and agrees that the various Construction Units on which bids are made are defined by symbols and descriptions in this Proposal, that all said bids are on a unit basis, and that the Owner may specify any number or combination of Construction Units that the Owner may deem necessary for the construction of the Project. Separate Construction Units are designated for each different arrangement which may be used in the construction of the Project. This Proposal is based on a consideration of each unit in place and includes only the materials listed on the corresponding Construction Drawings or description of unit where no drawing exists.

Section 6. Description of Contract. The Notice and Instructions to Bidders and Plans attached hereto and made a part hereof, and the Specifications and Construction Drawings set forth in:

RUS Bulletin 50–3, Specifications and Drawings for 12.5/7.2 kV Line Construction;

RUS Form 803, Specifications and Drawings for 14.4/24.9 kV Line Construction;

RUS Form 806, Specifications and Drawings for Underground Electric Distribution;

RUS Bulletin 50–2, RUS Specifications T–805A, Electric Transmission Specifications and Drawings, 34.5 kV through 69 kV;

RUS Bulletin 50–1, RUS Specification T–805B, Electric Transmission Specifications and Drawings for 115 kV through 230 kV; as applicable, which by this reference are incorporated herein, together with the Proposal and Acceptance constitute the Contract. The Plans, consisting of maps and special drawings, and approved modifications in standard specifications are attached hereto and identified as follows: ————.

Section 7. Familiarity with Conditions. The Bidder has made a careful examination of the site of the Project to be constructed and of the Plans, Specifications, Construction Drawings, and form of Contractor's Bond attached hereto, and has become informed as to the location and nature of the proposed construction, the transportation facilities, the kind and character of soil and terrain to be encountered, and the kind of facilities required before and during the construction of the Project, and has become acquainted with the labor conditions, state and local laws, and regulations which would affect work on the proposed construction.

Section 8. License. The Bidder warrants that a Contractor's License is ____ is not ____ required, and if required it posses Contractor's License No. ____ for the State of ____ in which the Project is located and said license expires on ____, 19____.

Section 9. Warranty of Good Faith. The Bidder warrants that this Proposal is made in good faith and without collusion or connection with any person or persons bidding for the same work.

Section 10. Warranty of Financial Resources. The Bidder warrants that it possesses adequate financial resources and agrees that in the event this Proposal is accepted and a Contractor's Bond is required, it will furnish a Contractor's Bond in the form attached hereto, in a penal sum not less than the maximum Contract price, with a surety or sureties listed by the United States Department of Treasury as Acceptance Sureties.

In the event that the surety or sureties on the performance bond delivered to the Owner contemporaneously with the execution of the Contract or on any bond or bonds delivered in substitution thereof or in addition thereto shall at any time become unsatisfactory to the Owner or the Administrator, the Bidder agrees to deliver to the Owner another or an additional bond.

Section 11. Taxes. The unit prices for Construction Units in this Proposal include provisions for the payment of all monies which will be payable by the Bidder or the Owner in connection with the construction of the Project on account of taxes imposed by any taxing authority upon the sale, purchase or use of materials, supplies and equipment, or services or labor of installation thereof, to be incorporated in the Project as part of such Construction Units. The Bidder agrees to pay all such taxes, except taxes upon the sale, purchase or use of owner-furnished materials and it is understood that, as to owner-furnished materials, the values stated in the attached ''List of Owner's Materials on Hand'' and ''List of Materials Ordered by Owner But Not Delivered'' include taxes upon the sale, purchase or use of owner-furnished materials, if applicable. The Bidder will furnish to the appropriate taxing authorities all required information and reports pertaining to the Project, except as to the Owner-furnished materials.

Section 12. Changes in Quantities. The Bidder understands and agrees that the quantities called for in this Proposal are approximate, and that the total number of units upon which payment shall be made shall be as set forth in the inventory. If the Owner changes the quantity of any unit or units specified in this Proposal by more than fifteen percent (15%) and the materials cost to the Bidder is increased thereby to an extent which would not be adequately compensated by application of the unit prices in this Proposal to the revised quantity of such unit or units, such change, to the extent of the quantities of such units in excess of such fifteen percent (15%) shall be regarded as a change in the construction within the meaning of Article II, Section 1(d) of this proposal.

LIST OF OWNER'S MATERIALS ON HAND

Item [1]	Description of material	Catalog No.	Quantity	Unit price	Extended price
Total: Above Materials are Located at:					

Notes: 1. Item corresponds with item in list of materials in construction drawings. Under Article I, Section 3, the value of these materials will be deducted from payments to the Bidder for completed Construction Units.

LIST OF MATERIALS ORDERED BY OWNER BUT NOT DELIVERED

Item [1]	Supplier name and address	Scheduled delivery date	Description of material	Catalog No.	Quantity	Unit price	Extended price
Total: Above Material to be Delivered to:							

Notes: 1. Item corresponds with item in list of materials in construction drawings. Under Article I, Section 3, the value of these materials will be deducted from payments to the Bidder for completed Construction Units.

Article II—Construction

Section 1. Time and Manner of Construction.

a. The Bidder agrees to commence construction of the Project on a date (hereinafter called the ''Commencement Date'') which shall be determined by the Engineer after notice in writing from the Bidder that the Bidder has sufficient materials to warrant commencement and continuation of construction, but in no event will the Commencement Date be later than _____ calendar days after date of approval of the Contract by the Administrator. The Bidder further agrees to prosecute diligently and to complete construction in strict accordance with the Plans, Specifications and Construction Drawings within _____ (_____) calendar days (excluding Sundays) after Commencement Date: Provided, however, that the Bidder will not be required to dig holes, set poles, install anchors, install underground conduit, perform any plowing for the installation of underground cable, or dig trenches if there are more than six (6) inches of frost on the ground nor to perform any construction on such days when in the judgment of the Engineer snow, rain, or wind, or the results of snow, rain, or frost make it impracticable to perform any operation of

construction; provided further that the Bidder will not be required to perform any plowing for the installation of underground cable on public roads or highways if there are more than two (2) inches of frost in the ground. To the extent of the time lost due to the conditions described herein and approved in writing by the Engineer, the time of completion set out above will be extended if the Bidder makes a written request therefore to the Owner as provided in subsection b of this Section 1.

b. The time for Completion of Construction shall be extended for the period of any reasonable delay which is due exclusively to causes beyond the control and without the fault of the Bidder, including Acts of God, fires, floods, inability to obtain materials and acts or omissions of the Owner with respect to matters for which the Owner is solely responsible: Provided, however that no such extension of time for completion shall be granted the Bidder unless within ten (10) days after the happening of any event relied upon by the Bidder for such an extension of time the Bidder shall have made a request therefore in writing to the Owner, and provided further that no delay in such time of completion or in the progress of the work which results from any of the above causes except acts or omissions of the Owner, shall result in any liability on the part of the Owner.

c. The sequence of construction shall be as set forth below, the number or names being the designations of extensions or areas (hereinafter called the ''Sections'') corresponding to the numbers or names shown on the maps attached hereto, or if no Sections are set forth below, the sequence of construction shall be as determined by the Bidder, subject to the approval of the Engineer. _____

d. The Owner, acting through the Engineer may from time to time during the progress of the construction of the Project make such changes, additions or subtractions from the Plans, Specifications, Construction Drawings, List of Materials and sequence of construction provided for in the previous paragraph which are part of the Contractor's Proposal as conditions may warrant: Provided, however, that if any change in the construction to be done shall require an extension of time, a reasonable extension will be granted if the Bidder shall make a written request therefore to the Owner within (10) days after any such change is made. And provided further, that if the cost to the Bidder of construction of the project shall be materially increased by any such change or addition, the Owner shall pay the Bidder for the reasonable cost thereof in accordance with a Construction Contract Amendment signed by the Owner and the Bidder, but no claim for additional compensation for any such change or addition will be considered unless the Bidder shall have made a written request therefore to the Owner prior to the commencement of work in connection with such change or addition.

e. The Bidder will not perform any work hereunder on Sundays unless there is urgent need for such Sunday work and the Owner consents thereto in writing. The time for completion specified in subsection a of this Section 1 shall not be affected in any way by inclusion of this subsection nor by the Owner's consent or lack of consent to Sunday work hereunder.

Section 2. Environmental Protection. The Bidder shall perform work in such a manner as to maximize preservation of beauty, consideration of natural resources and minimize marring and scarring of the landscape and silting of streams. The Bidder shall not deposit trash in streams or waterways, and shall not deposit herbicides or other chemicals or their containers in or near streams, waterways or pastures. The Bidder shall follow the criteria relating to environmental protection as specified herein by the Engineer.

Section 3. Tools, Equipment, and Qualified Personnel. The Bidder agrees that in the event this Proposal is accepted it will make available for use in connection with the proposed construction all necessary tools and equipment and qualified superintendents and foremen.

Section 4. Changes in Construction. The Bidder agrees to make such changes in construction previously erected in the Project by the Bidder as required by the Owner for prices arrived at as follows:

a. For substations and other units where only a portion of the complete unit is affected by the change, the compensation for such change shall be as agreed upon in writing by the Bidder and the Owner prior to the commencement of work in connection with such change.

b. For all other units, the compensation for such change shall be the reasonable cost thereof as agreed upon by the Bidder and the Owner, but in no event shall it exceed two (2) times the labor price quoted in the Proposal for the installation of the unit to be changed. Such compensation shall be in lieu of any other payment for the installation and removal of the original unit. (If a new or replacing unit is installed, payment for such new or replacing unit shall be made as shown in the final inventory.)

No payment shall be made to the Bidder for materials or labor involved in correcting errors or omissions on the part of the Bidder which result in construction not in accordance with the Plans and Specifications.

Section 5. Construction Not in Proposal. The Bidder also agrees that when it is necessary to construct units not shown in the Proposal it will construct such units for a price arrived at as follows:

a. The cost of materials shall be determined by the invoices.

b. The cost of labor shall be the reasonable cost thereof, but in no event shall it exceed an amount determined by calculating the ratio of the total labor costs to the total material costs in the section of the Proposal involved, and multiplying the cost of materials for the unit in question by this ratio: Provided, however, that in respect of sections H, M, and N, the ratio shall be calculated for only those units of the section which are similar to the new unit for which a price is to be determined.

Section 6. Supervision and Inspection.

a. The Bidder shall cause the construction work on the Project to receive constant supervision by a competent superintendent (hereinafter called the ''Superintendent'') who shall be present at all times during working hours where construction is being carried on. The Bidder shall also employ, in connection with the construction of the Project, capable, experienced and reliable foremen and such skilled workmen as may be required for the various classes of work to be performed. Directions and instructions given to the Superintendent shall be binding upon the Bidder.

b. The Owner reserves the right to require the removal from the Project of any employee of the Bidder if in the judgment of the Owner such removal shall be necessary in order to protect the interest of the Owner. The Owner or the Supervisor, if any, shall have the right to require the Bidder to increase the number of its employees and to increase or change the amount or kind of tools and equipment if at any time the progress of the work shall be unsatisfactory to the Owner or Supervisor; but the failure of the Owner or Supervisor to give any such directions shall not relieve the Bidder of its obligations to complete the work within the time and in the manner specified in this Proposal.

c. The construction of the Project and all materials and equipment used therein, shall be subject to the inspection, tests, and acceptance by the Owner and the Administrator and the Bidder shall furnish all information required by the Owner or by the Administrator concerning the nature or source of any materials incorporated or to be incorporated in the Project. The Owner and the Administrator shall have the right to inspect all payrolls, invoices of materials, and other data and records of the Bidder and of any subcontractor, relevant to the construction of the Project. The Bidder shall provide all reasonable facilities necessary for such inspection and tests and shall maintain an office at the site of the Project, with telephone service where obtainable and at least one office employee to whom directions and instructions of the Owner may be delivered. Delivery of such directions or instructions in writing to the employee of the Bidder at such office shall constitute delivery to the Bidder. The Bidder shall have an authorized agent accompany the Engineer when final inspection is made and, if requested by the Owner, when any other inspection is made.

d. In the event that the Owner, or the Administrator, shall determine that the construction contains or may contain numerous defects, it shall be the duty of the Bidder and the Bidder's Surety or Sureties, if any, to have an inspection made by an engineer approved by the Owner for the purpose of determining the exact nature, extent and location of such defects.

e. The Engineer may recommend to the Owner that the Bidder suspend the work wholly or in part for such period or periods as the Engineer may deem necessary due to unsuitable weather or such other conditions as are considered unfavorable for satisfactory prosecution of the work or because of the failure of the Bidder to comply with any of the provisions of the Contract: Provided, however, that the Bidder shall not suspend work pursuant to this provision without written authority from the Owner so to do. The time of completion hereinabove set forth shall be increased by the number of days of any such suspension, except when such suspension is due to the failure of the Bidder to comply with any of the provisions of this Contract. In the event that work is suspended by the Bidder with the consent of the Owner, the Bidder before resuming work shall give the Owner at least twenty-four (24) hours notice thereof in writing.

Section 7. Defective Materials and Workmanship.

a. The acceptance of any materials, equipment (except Owner-furnished materials) or any workmanship by the Owner or the Engineer shall not preclude the subsequent rejection thereof if such materials, equipment, or workmanship shall be found to be defective after delivery or installation, and any such materials, equipment or workmanship found defective before final acceptance of the construction shall be replaced or remedied, as the case may be, by and at the expense of the Bidder. Any such condemned material or equipment shall be immediately removed from the site of the Project by the Bidder at the Bidder's expense. The Bidder shall not be entitled to any payment hereunder so long as any defective materials, equipment or workmanship in respect to the Project, of which the Bidder shall have had notice, shall not have been replaced or remedied, as the case may be.

b. Notwithstanding any certificate which may have been given by the Owner or the Engineer, if any materials, equipment (except Owner-furnished materials) or any workmanship which does not comply with the requirements of this Contract shall be

discovered within one (1) year after Completion of Construction of the Project, the Bidder shall replace such defective materials or equipment or remedy any such defective workmanship within thirty (30) days after notice in writing of the existence thereof shall have been given by the Owner. If the Bidder shall be called upon to replace any defective materials or equipment or to remedy defective workmanship as herein provided, the Owner, if so requested by the Bidder shall deenergize that section of the Project involved in such work. In the event of failure by the Bidder so to do, the Owner may replace such defective materials or equipment or remedy such defective workmanship, as the case may be, and in such event the Bidder shall pay to the Owner the cost and expense thereof.

Article III—Payments and Release of Liens

Section 1. Payments to Bidder

a. Within the first fifteen (15) days of each calendar month, the Owner shall make partial payment to the Bidder for construction accomplished during the preceding calendar month on the basis of completed Construction Units furnished and certified to by the Bidder, recommended by the Engineer and approved by the Owner solely for the purposes of payment: Provided, however, that such approval shall not be deemed approval of the workmanship or materials. Only ninety percent (90%) of each such estimate approved during the construction of the Project shall be paid by the Owner to the Bidder prior to Completion of the Project: Provided, however, that at any time after work, which, in the sole determination of the Engineer, amounts to fifty percent (50%) of the maximum Contract price has been completed, the Owner may elect, in lieu of paying ninety percent (90%) of each such subsequent estimate, to pay each such subsequent estimate in full. Upon completion by the Bidder of the construction of the Project, the Engineer will prepare an inventory of the Project showing the total number and character of Construction Units and, after checking such inventory with the Bidder, will certify it to the Owner. Upon the approval by the Owner and the Administrator of a Certificate of Completion—Contract Construction, RUS Form 187, showing the total cost of the construction performed, the Owner shall make payment to the Bidder of all amounts to which the Bidder shall be entitled thereunder which shall not have been paid: Provided, however, that such final payment shall be made not later than ninety (90) days after the date of Completion of Construction of the Project, as specified in the Certificate of Completion, unless withheld because of the fault of the Bidder.

b. The Bidder shall be paid on the basis of the number of Construction Units actually installed at the direction of the Owner shown by the inventory based on the staking sheets or structure lists; Provided, however, that the total cost shall not exceed the maximum Contract price for the construction of the Project as set forth in the Acceptance plus the costs of any additional change orders, unless such excess shall have been approved in writing by the Owner.

c. Notwithstanding the provisions of Section 1.a above, the Bidder may, by giving written notice thereof to the Owner, elect to receive payment in full for any Section of the Project upon:

(1) completion of such Section as certified by the Engineer and approved by the Owner;

(2) submission to the Owner of the releases of lien and the certificate referred to in Section 2 hereof;

(3) approval by the Owner of the inventory in respect of such Section; and

(4) submission to the Owner and the Administrator of the consent in writing by the Surety or Sureties, if any, on the Contractor's Bond to payment in full for such Section prior to Completion of the Project. If no Sections are designated in Article II, Section 1c, the term ''Section'' shall mean for purposes of this subsection c and Article IV, Section 3b only, a part of the Project as designated by the Owner which represents at least twenty-five percent (25%) of the maximum Contract price as stated in Article III, Section 1, and which is capable of being energized and operated by the Owner.

d. Interest at the rate of ___ percent[1] (___%) per annum shall be paid by the Owner to the Bidder on all unpaid balances due on monthly estimates, commencing fifteen (15) days after the due date; provided the delay in payment beyond the due date is not caused by any condition within the control of the Bidder. The due date for purposes of such monthly payment or interest on all unpaid balances shall be the fifteenth (15) day of each calendar month provided (1) the Bidder on or before the fifth (5) day of such month shall have submitted its certification of Construction Units completed during the preceding month and (2) the Owner on or before the fifteenth (15) day of such month shall have approved such certification. If, for reasons not due to the Bidder's fault, such approval shall not have been given on or before the fifteenth (15) day of such month, the due date for purposes of this subsection d shall be the fifteenth (15) day of such month notwithstanding the absence of the approval of the certification.

[1] The Owner shall insert a rate equal to the lowest ''Prime Rate'' listed in the ''Money Rates'' section of the Wall Street Journal on the date such invitation to bid is issued.

e. Interest at the rate of ___ percent[2] (___%) per annum shall be paid by the Owner to the Bidder on the final payment for the Project or any completed Section thereof, commencing fifteen (15) days after the due date. The due date for purposes of such final payment or interest on all unpaid balances shall be the date of approval by the Owner of all of the documents requiring such approval, as a condition precedent to the making of final payment, or ninety (90) days after the date of Completion of Construction of the Project, as specified in the Certificate of Completion, whichever date is earlier.

f. No payment shall be due while the Bidder is in default in respect of any of the provisions of this Contract and the Owner may withhold from the Bidder the amount of any claim by a third party against either the Bidder or the Owner based upon an alleged failure of the Bidder to perform the work hereunder in accordance with the provisions of this Contract.

Section 2. Release of Liens and Certificate of Contractor. (See RUS Form 224, Waiver and Release of Lien and RUS Form 231, Certificate of Contractor). Upon the completion by the Bidder of the construction of the Project (or any Section thereof if the Bidder shall elect to receive payment in full for any Section when completed as provided above) but prior to final payment to the Bidder, the Bidder shall deliver to the Owner, in duplicate, releases of all liens and of rights to claim any lien, in the form attached hereto from all manufacturers, material suppliers, and subcontractors furnishing services or materials for the Project or such Section and a certificate in the form attached hereto to the effect that all labor used on or for the Project or such Section has been paid and that all such releases have been submitted to the Owner.

Section 3. Payments to Material Suppliers and Subcontractors. The Bidder shall pay each material supplier, if any, within five (5) days after receipt of any payment from the Owner, the amount thereof allowed the Bidder for and on account of materials furnished or construction performed by each material supplier or each subcontractor.

Article IV—Particular Undertakings of the Bidder

Section 1. Protection to Persons and Property. The Bidder shall at all times take all reasonable precautions for the safety of employees on the work and of the public, and shall comply with all applicable provisions of Federal, State, and Municipal safety laws and building and construction codes, as well as the safety rules and regulations of the Owner. All machinery and equipment and other physical hazards shall be guarded in accordance with the ''Manual of Accident Prevention in Construction'' of the Associated General Contractors of America unless such instructions are incompatible with Federal, State, or Municipal laws or regulations.

The following provisions shall not limit the generality of the above requirements:

a. The Bidder shall at no time and under no circumstances cause or permit any employee of the Bidder to perform any work upon energized lines, or upon poles carrying energized lines, unless otherwise specified in the Notice and Instructions to Bidders.

b. The Bidder shall so conduct the construction of the Project as to cause the least possible obstruction of public highways.

c. The Bidder shall provide and maintain all such guard lights and other protection for the public as may be required by applicable statutes, ordinances and regulations or by local conditions.

d. The Bidder shall do all things necessary or expedient to properly protect any and all parallel, converging and intersecting lines, joint line poles, highways and any and all property of others from damage, and in the event that any such parallel, converging and intersecting lines, joint line poles, highways or other property are damaged in the course of the construction of the Project the Bidder shall at its own expense restore any or all of such damaged property immediately to as good a state as before such damage occurred.

e. Where the right-of-way of the Project traverses cultivated lands, the Bidder shall limit the movement of its crews and equipment so as to cause as little damage as possible to crops, orchards or property and shall endeavor to avoid marring the lands. All fences which are necessarily opened or moved during the construction of the Project shall be replaced in as good condition as they were found and precautions shall be taken to prevent the escape of livestock. Except as otherwise provided in the descriptions of underground plowing and trenching assembly units, the Bidder shall not be responsible for loss of or damage to crops, orchards or property (other than livestock) on the right-of-way necessarily incident to the construction of the Project and not caused by negligence or inefficient operation of the Bidder. The Bidder shall be responsible for all other loss of or damage to crops, orchards, or property, whether on or off the right-of-way, and for all loss of or damage to livestock caused by the construction of the Project. The right-of-way for purposes of this said section shall consist of an area extending ___ feet on both sides of the center line of the poles along the route of the Project lines, plus such area reasonably required by the Bidder for access to the route of the Project lines from Public roads to carry on construction activities.

f. The Project, from the commencement of work to completion, or to such earlier date

[2] See Footnote 1.

or dates when the Owner may take possession and control in whole or in part as hereinafter provided shall be under the charge and control of the Bidder and during such period of control by the Bidder all risks in connection with the construction of the Project and the materials to be used therein shall be borne by the Bidder. The Bidder shall make good and fully repair all injuries and damages to the Project or any portion thereof under the control of the Bidder by reason of any act of God or other casualty or cause whether or not the same shall have occurred by reason of the Bidder's negligence.

(i) To the maximum extent permitted by law, Bidder shall defend, indemnify, and hold harmless Owner and Owner's directors, officers, and employees from all claims, causes of action, losses, liabilities, and expenses (including reasonable attorney's fees) for personal loss, injury, or death to persons (including but not limited to Bidder's employees) and loss, damage to or destruction of Owner's property or the property of any other person or entity (including but not limited to Bidder's property) in any manner arising out of or connected with the Contract, or the materials or equipment supplied or services performed by Bidder, its subcontractors and suppliers of any tier. But nothing herein shall be construed as making Bidder liable for any injury, death, loss, damage, or destruction caused by the sole negligence of Owner.

(ii) To the maximum extent permitted by law, Bidder shall defend, indemnify, and hold harmless Owner and Owner's directors, officers, and employees from all liens and claims filed or asserted against Owner, its directors, officers, and employees, or Owner's property or facilities, for services performed or materials or equipment furnished by Bidder, its subcontractors and suppliers of any tier, and from all losses, demands, and causes of action arising out of any such lien or claim. Bidder shall promptly discharge or remove any such lien or claim by bonding, payment, or otherwise and shall notify Owner promptly when it has done so. If Bidder does not cause such lien or claim to be discharged or released by payment, bonding, or otherwise, Owner shall have the right (but shall not be obligated) to pay all sums necessary to obtain any such discharge or release and to deduct all amounts so paid from the amount due Bidder.

(iii) Bidder shall provide to Owner's satisfaction evidence of Bidder's ability to comply with the indemnification provisions of subparagraphs i and ii above, which evidence may include but may not be limited to a bond or liability insurance policy obtained for this purpose through a licensed surety or insurance company.

g. Any and all excess earth, rock, debris, underbrush and other useless materials shall be removed by the Bidder from the site of the Project as rapidly as practicable as the work progresses.

h. Upon violation by the Bidder of any of the provisions of this section, after written notice of such violation given to the Bidder by the Engineer or the Owner, the Bidder shall immediately correct such violation. Upon failure of the Bidder so to do the Owner may correct such violation at the Bidder's expense: Provided, however, that the Owner may, if it deems it necessary or advisable, correct such violation at the Bidder's expense without such prior notice to the Bidder.

i. The Bidder shall submit to the Owner monthly reports in duplicate of all accidents, giving such data as may be prescribed by the Owner.

j. The Bidder shall not proceed with the cutting of trees or clearing of right-of-way without written notification from the Owner that proper authorization has been received from the owner of the property, and the Bidder shall promptly notify the Owner whenever any landowner objects to the trimming or felling of any trees or the performance of any other work on its land in connection with the Project and shall obtain the consent in writing of the Owner before proceeding in any such case.

k. The Bidder will furnish, prior to the commencement of underground distribution construction, proof, satisfactory to the Owner, of compliance with requirements of highway and road authorities having jurisdiction, including without limitation, the furnishing of a bond or other guaranty, and approval by such authorities of the equipment and methods of construction and repair to be used by the Bidder.

Section 2. Insurance. The Bidder shall take out and maintain throughout the period of this Agreement the following types and minimum amounts of insurance:

a. Workers' compensation and employers' liability insurance, as required by law, covering all their employees who perform any of the obligations of the contractor, engineer, and architect under the contract. If any employer or employee is not subject to the workers' compensation laws of the governing state, then insurance shall be obtained voluntarily to extend to the employer and employee coverage to the same extent as though the employer or employee were subject to the workers' compensation laws.

b. Public liability insurance covering all operations under the contract shall have limits for bodily injury or death of not less than $1 million each occurrence, limits for property damage of not less than $1 million each occurrence, and $1 million aggregate for accidents during the policy period. A single

limit of $1 million of bodily injury and property damage is acceptable. This required insurance may be in a policy or policies of insurance, primary and excess including the umbrella or catastrophe form.

c. Automobile liability insurance on all motor vehicles used in connection with the contract, whether owned, nonowned, or hired, shall have limits for bodily injury or death of not less than $1 million per person and $1 million each occurrence, and property damage limits of $1 million for each occurrence. This required insurance may be in a policy or policies of insurance, primary and excess including the umbrella or catastrophe form.

The Owner shall have the right at any time to require public liability insurance and property damage liability insurance greater than those required in subsection ''b'' and ''c'' of this Section. In any such event, the additional premium or premiums payable solely as the result of such additional insurance shall be added to the Contract price.

The Owner shall be named as Additional Insured on all policies of insurance required in subsections ''b'' and ''c'' of this Section.

The policies of insurance shall be in such form and issued by such insurer as shall be satisfactory to the Owner. The Bidder shall furnish the Owner a certificate evidencing compliance with the foregoing requirements which shall provide not less than (30) days prior written notice to the Owner of any cancellation or material change in the insurance.

Section 3. Delivery of Possession and Control to Owner.

a. Upon written request of the Owner the Bidder shall deliver to the Owner full possession and control of any portion of the Project provided the Bidder shall have been paid at least ninety percent (90%) of the cost of construction of such portion. Upon such delivery of the possession and control of any portion of the Project to the Owner, the risk and obligations of the Bidder as set forth in Article IV, Section 1f hereof with respect to such portion of the Project so delivered to the Owner shall be terminated; Provided, however, that nothing herein contained shall relieve the Bidder of any liability with respect to defective materials and workmanship as contained in Article II, Section 6 hereof.

b. Where the construction of a Section as hereinbefore defined in Article II, Section 1c and Article III, Section 1c shall have been completed by the Bidder, the Owner agrees, after receipt of a written request from the Bidder, to accept delivery of possession and control of such Section upon the issuance by the Engineer of a written statement that the Section has been inspected and found acceptable by the Engineer. Upon such delivery of the possession and control of any such Section to the Owner, the risk and obligations of the Bidder as set forth in Article IV, Section 1f hereof with respect to such Section so delivered to the Owner shall be terminated: Provided, however, that nothing herein contained shall relieve the Bidder of any liability with respect to defective materials or workmanship as contained in Article II, Section 6 hereof.

Section 4. Energizing the Project.

a. Prior to Completion of the Project the Owner, upon written notice to the Bidder, may test the construction thereof by temporarily energizing any portion or portions thereof. During the period of such test the portion or portions of the Project so energized shall be considered as within the possession and control of the Owner and governed by the provisions of Section 3 of this Article. Upon written notice to the Bidder by the Owner of the completion of such test and upon deenergizing the lines involved therein said portion or portions of the Project shall be considered as returned to the possession and control of the Bidder unless the Owner shall elect to continue possession and control in the manner provided in Section 3 of this Article.

b. The Owner shall have the right to energize permanently any portion or portions of the Project delivered to its possession and control pursuant to the provisions of Section 3 of this Article.

Section 5. Assignment of Guarantees. All guarantees of materials and workmanship running in favor of the Bidder shall be transferred and assigned to the Owner prior to the time the Bidder receives final payment.

Article V—Remedies

Section 1. Completion on Bidder's Default. If default shall be made by the Bidder or by any subcontractor in the performance of any of the terms of this Proposal, the Owner, without in any manner limiting its legal and equitable remedies in the circumstances, may serve upon the Bidder and the Surety or Sureties, if any, upon the Contractor's Bond or Bonds a written notice requiring the Bidder to cause such default to be corrected forthwith. Unless within twenty (20) days after the service of such notice upon the Bidder such default shall be corrected or arrangements for the correction thereof satisfactory to both the Owner and the Administrator shall be made by the Bidder or its Surety or Sureties, if any, the Owner may take over the construction of the Project and prosecute the same to completion by Contract or otherwise for the account and at the expense of the Bidder, and the Bidder and its Surety or Sureties, if any, shall be liable to the Owner for any cost or expense in excess of the Contract price occasioned thereby. In such event the Owner may take possession of and utilize, in completing the construction of the Project, any materials, tools, supplies, equipment, appliances, and

plant belonging to the Bidder or any of its subcontractors, which may be situated at the site of the Project. The Owner in such contingency may exercise any rights, claims or demands which the Bidder may have against third persons in connection with this Contract and for such purpose the Bidder does hereby assign, transfer and set over unto the Owner all such rights, claims and demands.

Section 2. Liquidated Damages. The time of the Completion of Construction of the Project is of the essence of the Contract. Should the Bidder neglect, refuse or fail to complete the construction within the time herein agreed upon, after giving effect to extensions of time if any, herein provided, then, in that event and in view of the difficulty of estimating with exactness damages caused by such delay, the Owner shall have the right to deduct from and retain out of such moneys which may be then due, or which may become due and payable to the Bidder the sum of _____ dollars (_____) per day for each and every day that such construction is delayed in its completion beyond the specified time, as liquidated damages and not as a penalty; if the amount due and to become due from the Owner to the Bidder is insufficient to pay in full any such liquidated damages, the Bidder shall pay to the Owner the amount necessary to effect such payment in full: Provided, however, that the Owner shall promptly notify the Bidder in writing of the manner in which the amount retained, deducted or claimed as liquidated damages was computed.

Section 3. Cumulative Remedies. Every right or remedy herein conferred upon or reserved to the Owner or the Government or the Administrator shall be cumulative, shall be in addition to every right and remedy now or hereafter existing at law or in equity or by statute and the pursuit of any right or remedy shall not be construed as an election: Provided, however, that the provisions of Section 2 of this Article shall be the exclusive measure of damages for failure by the Bidder to complete the construction of the Project within the time herein agreed upon.

Article VI—Miscellaneous

Section 1. Definitions.

a. The term ''Administrator'' shall mean the Administrator of the Rural Utilities Service of the United States of America and his duly authorized representative or any other person in whom or authority in which may be vested the duties and functions which the Administrator is now authorized by law to perform.

b. The term ''Engineer'' shall mean the Engineer employed by the Owner, to provide engineering services for the Project and said Engineer's duly authorized assistants and representatives.

c. The term ''Supervisor'' shall mean the person, if any, appointed by the Administrator as the representative of the Government under the provisions of the Loan Contract providing for such appointment in special cases. The term is limited to such special representative of the Government, if any, who is responsible exclusively to the Administrator and does not refer to the Manager or any other person employed by the Owner and responsible to it.

d. The term ''Project'' shall mean the rural electric system, or portion thereof, described in the Plans and Specifications, Construction Drawings.

e. The term ''Completion of Construction'' shall mean full performance by the Bidder's obligations under the Contract and all amendments and revisions thereof except the Bidder's obligations in respect of (1) Releases of Liens and Certificate of Contractor under Article III, Section 2 hereof, (2) the inventory referred to in Article III, Section 1 hereof, and (3) other final documents. The term ''Completion of the Project'' shall mean full performance by the Bidder of the Bidder's obligations under the Contract and all amendments and revisions thereof. The Certificate of Completion, signed by the Engineer and approved in writing by the Owner, shall be the sole and conclusive evidence as to the date of Completion of Construction and as to the fact of Completion of the Project.

Section 2. Materials and Supplies. In the performance of this contract there shall be furnished only such unmanufactured articles, materials, and supplies as have been mined or produced in the United States, Mexico, or Canada, and only such manufactured articles, materials, and supplies as have been manufactured in the United States substantially all from articles, materials, or supplies mined, produced or manufactured, as the case may be, in the United States, Mexico, or Canada; provided that other articles, materials, or supplies may be used in the event and to the extent that the Administrator shall expressly in writing authorize such use pursuant to the provisions of the Rural Electrification Act of 1938, being Title IV of Public Resolution No. 122, 75th Congress, approved June 21, 1938. The Seller agrees to submit to the Purchaser such certificates with respect to compliance with the foregoing provision as the Administrator from time to time may require.

Section 3. Patent Infringement. The Bidder shall hold harmless and indemnify the Owner from any and all claims, suits and proceedings for the infringement of any patent or patents covering any materials or equipment used in construction of the Project.

Section 4. Permits for Explosives. All permits necessary for the handling or use of dynamite or other explosives in connection

with the construction of the Project shall be obtained by and at the expense of the Bidder.

Section 5. Compliance with Statutes and Regulations. The Bidder shall comply with all applicable statutes, ordinances, rules, and regulations pertaining to the work. The Bidder acknowledges that it is familiar with the Rural Electrification Act of 1936, as amended, the so-called ''Kick-Back'' Statute (48 Stat. 948), and regulations issued pursuant thereto, and 18 U.S.C. §§287, 1001, as amended. The Bidder understands that the obligations of the parties hereunder are subject to the applicable regulations and orders of Governmental Agencies having jurisdiction in the premises.

Section 6. Equal Opportunity Provisions.

(a) Bidder's Representations.

The Bidder represents that:

It has ____, does not have ____, 100 or more employees, and if it has, that it has ____, has not ____ furnished the Equal Employment Opportunity-Employers Information Report EEO–1, Standard Form 100, required of employers with 100 or more employees pursuant to Executive Order 11246 and Title VII of the Civil Rights Act of 1964.

The Bidder agrees that it will obtain, prior to the award of any subcontract for more than $10,000 hereunder to a subcontractor with 100 or more employees, a statement, signed by the proposed subcontractor, that the proposed subcontractor has filed a current report on Standard Form 100.

The Bidder agrees that if it has 100 or more employees and has not submitted a report on Standard Form 100 for the current reporting year and that if this Contract will amount to more than $10,000, the Bidder will file such report, as required by law, and notify the owner in writing of such filing prior to the Owner's acceptance of this Proposal.

(b) Equal Opportunity Clause. During the performance of this Contract, the Bidder agrees as follows:

(1) The Bidder will not discriminate against any employee or applicant for employment because of race, color, religion, sex or national origin. The Bidder will take affirmative action to ensure that applicants are employed, and that employees are treated during employment without regard to their race, color, religion, sex or national origin. Such action shall include, but not be limited to, the following: Employment, upgrading, demotions or transfer; recruitment or recruitment advertising; layoff or termination; rates of pay or other forms of compensation; and selection of training, including apprenticeship. The Bidder agrees to post in conspicuous places, available to employees and applicants for employment, notices to be provided setting forth the provisions of this Equal Opportunity Clause.

(2) The Bidder will, in all solicitations or advertisements for employees placed by or on behalf of the Bidder, state that all qualified applicants will receive consideration for employment without regard to race, color, religion, sex or national origin.

(3) The Bidder will send to each labor union or representative of workers, with which it has a collective bargaining agreement or other contract or understanding, a notice to be provided advising the said labor union or workers' representative of the Bidder's commitments under this section, and shall post copies of the notice in conspicuous places available to employees and applicants for employment.

(4) The Bidder will comply with all provisions of Executive Order 11246 of September 24, 1965, and the rules, regulations and relevant orders of the Secretary of Labor.

(5) The Bidder will furnish all information and reports required by Executive Order 11246 of September 24, 1965, and by rules, regulations, and orders of the Secretary of Labor, or pursuant thereto, and will permit access to its books, records, and accounts by the administering agency and the Secretary of Labor for purposes of investigation to ascertain compliance with such rules, regulations, and orders.

(6) In the event of the Bidder's noncompliance with the Equal Opportunity Clause of this Contract or with any of the said rules, regulations, or orders, this Contract may be canceled, terminated, or suspended in whole or in part, and the Bidder may be declared ineligible for further Government contracts or federally assisted construction contracts in accordance with procedures authorized in Executive Order 11246 of September 24, 1965, and such other sanctions may be imposed and remedies invoked as provided in Executive Order 11246 of September 24, 1965, or by rule, regulation, or order of the Secretary of Labor, or as provided by law.

(7) The Bidder will include this Equal Opportunity Clause in every subcontract or purchase order unless exempted by the rules, regulations, or order of the Secretary of Labor issued pursuant to Section 204 of Executive Order 11246 of September 24, 1965, so that such provisions will be binding upon each subcontractor or vendor. The Bidder will take such action with respect to any subcontract or purchase order as the administering agency may direct as a means of enforcing such provisions, including sanctions for noncompliance; Provided, however, that in the event Bidder becomes involved in, or is threatened with, litigation with a subcontractor or vendor as a result of such direction by the administering agency, the Bidder may request the United States to enter into such litigation to protect the interests of the United States.

(c) Certificate of Nonsegregated Facilities. The Bidder certifies that it does not maintain or provide for its employees any segregated facilities at any of its establishments, and that it does not permit its employees to perform their services at any location, under its control, where segregated facilities are maintained. The Bidder certifies further that it will not maintain or provide for its employees any segregated facilities at any of its establishments, and that it will not permit its employees to perform their services at any location, under its control, where segregated facilities are maintained. The Bidder agrees that a breach of this certification is a violation of the Equal Opportunity Clause in this Contract. As used in this certification, the term ''segregated facilities'' means any waiting rooms, work areas, restrooms and washrooms, restaurants and other eating areas, timeclocks, locker rooms and other storage or dressing areas, parking lots, drinking fountains, recreation or entertainment areas, transportation, and housing facilities provided for employees which are segregated by explicit directive or are in fact segregated on the basis of race, color, religion, or national origin, because of habit, local custom, or otherwise. The Bidder agrees that (except where it has obtained identical certifications from proposed subcontractors for specific time periods) it will obtain identical certifications from proposed subcontractors prior to the award of subcontracts exceeding $10,000 which are not exempt from the provisions of the Equal Opportunity Clause, and that it will retain such certifications in its files.

Section 7. Franchises and Rights-of-Way. The Bidder shall be under no obligation to obtain or assist in obtaining: Any franchises, authorizations, permits or approvals required to be obtained by the Owner from Federal, State, County, Municipal or other authorities; any rights-of-way over private lands; or any agreements between the Owner and third parties with respect to the joint use of poles, crossings, or other matter incident to the construction and operation of the Project.

Section 8. Nonassignment of Contract. The Bidder shall perform directly and without subcontracting not less than twenty-five percent (25%) of the construction of the Project, to be calculated on the basis of the total Contract price. The Bidder shall not assign the Contract effected by an acceptance of this Proposal or any interest in any funds that may be due or become due hereunder or enter into any contract with any person, firm or corporation for the performance of the Bidder's obligations hereunder or any part thereof, without the approval in writing of the Owner and of the Surety or Sureties, if any, on any bond furnished by the Bidder for the faithful performance of the Bidder's obligations hereunder. If the Bidder, with the consent of the Owner and any Surety or Sureties on the Contractor's Bond or Bonds, shall enter into a subcontract with any subcontractor for the performance of any part of this Contract, the Bidder shall be as fully responsible to the Owner and the Government for the acts and omissions of such subcontractor and of persons employed by such subcontractor as the Bidder would be for its own acts and omissions and those of persons directly employed by it.

Section 9. Extension to Successors and Assigns. Each and all of the covenants and agreements herein contained shall extend to and be binding upon the successors and assigns of the parties hereto.

Section 10. Contractor. Upon acceptance of this Proposal, the successful Bidder shall be the Contractor and all references in the Proposal to the Bidder shall apply to the Contractor.

_____ (Bidder)
By _____ (President)
_____ (Address)
Attest: _____ (Secretary)
Date _____

The Proposal must be signed with the full name of the Bidder. If the Bidder is a partnership, the Proposal must be signed in the partnership name by a partner. If the Bidder is a corporation, the Proposal must be signed in the corporate name by a duly authorized officer and the corporate seal affixed and attested by the Secretary of the Corporation.

Distribution Construction Units—New Construction

SECTION 1—POLE UNITS

A pole unit consists of one pole in place. It does not include pole-top assembly unit or other parts attached to the pole. The first two digits indicate the length of the pole; the third digit shows the classification per ANSI (Example: 35–5 means a pole 35 feet long, class 5.)

Species of Timber: _____

Kind of Preservative: (Check one)

1. Creosote ____; 2. Pentachlorophenol ____; 3. Copper Naphthenate ____; 4. Waterborne preservative—CCA ____ ACZA ____

Method of Treatment: (Check one)

1. Pressure ____; 2. Thermal Process ____

Pole Plan Under Which the Poles are to be Furnished: (Check one)

1. Insured Warranted ____; 2. Independently Inspected ____; 3. Quality Assured ____; 4. Either Insured Warranted, Independently Inspected, or Quality Assured ____

(Engineer to complete above)

Unit No.	No. of units	Unit price			Extended price—labor & materials
		Labor	Materials	Labor & materials	

Total, Section 1—_____

Section A—Single Phase Pole Top Assembly Units

A pole top assembly unit consists of the hardware, crossarms, and their appurtenances, insulators, etc., except tie wire, required to support the primary conductors. It does not include the pole. Crossarm pins include washer, nut, and locknut.

Unit No.	No. of units	Unit price			Extended price—labor & materials
		Labor	Materials	Labor & materials	

Total, Section A—_____

Section B—V Phase Pole Top Assembly Units

A pole top assembly units consists of the hardware, crossarms, and their appurtenances, insulators, etc., except tie wire, required to support the primary conductors. It does not include the pole. Crossarm pins include washer, nut, and locknut.

Unit No.	No. of units	Unit price			Extended price—labor & materials
		Labor	Materials	Labor & materials	

Total, Section B—_____

Section C—Three Phase Pole Top Assembly Units

A pole top assembly unit consists of the hardware, crossarms, and their appurtenances, insulators, etc., except tie wire, required to support the primary conductors. It does not include the pole. Crossarm pins include washer, nut, and locknut.

Unit No.	No. of units	Unit price			Extended price—labor & materials
		Labor	Materials	Labor & materials	

Total, Section C—_____

Section D—Conductor Assembly Units

A conductor assembly unit consists of 1,000 feet of conductor or cable for primaries, secondaries or services, and includes tie wires, sleeves for splicing, connectors, and armor rods with clips or armor wire where necessary.

Tree trimming necessary for installing services and secondaries on poles not carrying primary line is included with the conductor assembly unit and shall be performed in accordance with the directions of the Engineer. The service shall be connected to the secondary or transformer and 2 feet of conductor or cable shall be left for connecting to the consumer's service entrance. In computing the compensation to the Bidder for conductor assembly units only the horizontal distance between conductor supports or pole stakes shall be used. The conductor or cable sizes and types listed are the manufacturer's designation.

Unit No.	No. of units	Unit price			Extended price—labor & materials
		Labor	Materials	Labor & materials	

Total, Section D—_____

Section E—Guy Assembly Units

A guy assembly unit consists of the hardware and wire, and guy insulator where necessary. An overhead guy assembly consists of an overhead guy, a pole, and a down guy, each of which is listed separately. Guy markers are designated separately.

Unit No.	No. of units	Unit price			Extended price—labor & materials
		Labor	Materials	Labor & materials	
E					

Total, Section E—_____

Section F—Anchor Assembly Units

An anchor assembly unit consists of the anchor with rod complete, ready for attaching the guy wire.

Unit No.	No. of units	Unit price			Extended price—labor & materials
		Labor	Materials	Labor & materials	
F					

Total, Section F—_____

Section G—Transformer Assembly Units

A transformer assembly units consists of the transformer, its protective equipment, and its hardware and leads with their connectors and supporting insulators and pins. this units does not include the pole top, secondary, service, or grounding assemblies.

Unit No.	No. of units	Unit price			Extended price—labor & materials
		Labor	Materials	Labor & materials	

Total, Section G—_____

Section J—Secondary Assembly Units

A secondary assembly unit consists of the hardware, insulators, etc., to support the secondary conductors or cable. It does not include the secondary conductor or cable, or any hardware, insulators, etc. required to support service conductors or cable.

Unit No.	No. of units	Unit price			Extended price—labor & materials
		Labor	Materials	Labor & materials	
J					

Total, Section J—_____

Section K—Service Assembly Units

A service assembly unit consists of the hardware, insulators, etc., required to support the service conductors or cable. It does

not include the service conductor or cable, or any hardware, insulators, etc., required to support secondary conductors or cable.

Unit No.	No. of units	Unit price			Extended price—labor & materials
		Labor	Materials	Labor & materials	
K					

Total, Section K—_____

Section M—Miscellaneous Assembly Units

A miscellaneous assembly unit consists of an additional unit needed in the Project for new line construction but not otherwise listed in the Proposal. This section includes grounding assemblies consisting of the conductor, ground rod, grounding plate, connectors and clamps as shown on the respective drawings for the various types. It also includes fuse cutouts, reclosers, sectionalizers, switches, capacitors, regulators, metering and other assembly units.

Unit No.	No. of units	Unit price			Extended price—labor & materials
		Labor	Materials	Labor & materials	
M					

Total, Section M—_____

Section R—Right-of-Way Clearing Units

R1–10. The unit is 1,000 feet in length and 10 feet in width (to be measured on one side of the pole line) of actual clearing of right-of-way. This includes clearing of underbrush, tree removal, and such tree trimming as is required so that the right-of-way, except for tree stumps which shall not exceed _____ in height, shall be clear from the ground up on one side of the line of poles carrying primary conductors of the width specified. This unit does not include clearing or trimming associated with secondaries or services which is included with conductor units. The segmental length of actual clearing shall be measured in a straight line parallel to the transmission centerline using the maximum dimension of foliage cleared and projected to the ground line. All trees and underbrush across this width of the right-of-way shall be considered to be grouped together as a single length in measuring the total length of clearing. Spaces along the right-of-way in which no trees are to be removed or trimmed or underbrush cleared shall be omitted from the total measurement. All length thus arrived at, added together and divided by 1,000, shall give the number of 1,000-foot R1–10 units of clearing. This unit includes the removal or topping, at the option of the Bidder, of danger trees outside of the right-of-way when so designated by the Engineer. (Danger trees are defined as dead or leaning trees which, in falling, will affect the operation of the line.) The Bidder shall not remove or trim shade, fruit, or ornamental trees unless so directed by the Engineer.

R1–20. This unit is identical with R1–10 except that the width is 20 feet (to be measured 10 feet on each side of the pole line).

R1–30. This unit is identical with R1–10 except that the width is 30 feet (to be measured 15 feet on each side of the pole line).

R1–40. This unit is identical with R1–10 except that width is 40 feet (to be measured 20 feet on each side of the pole line).

RC1–10, RC1–20, RC1–30, RC1–40. These units are identical to the respective R1 units except that chemical treatment of stumps is required in addition to the clearing of underbrush, tree removal and tree trimming.

Additional Requirements (When specifying R1 units denote type of disposal (A or B).)

A. Trees, brush, branches and refuse shall, without delay, be disposed of by one of the following methods as the Engineer will direct (Engineer to strike out methods not to be used):

1. Burned
2. Piled on one side of right-of-way
3. Roller chopped and left on right-of-way in such a manner as not to obstruct roads, ditches, drains, etc.
4. Other (describe) _____

B. Trees that are felled shall be cut to commercial wood lengths, stacked neatly, and left on the right-of-way for the landowner. Commercial wood length means the length designated by the Engineer but in no case shall it be required to be less than ____ (____) feet. Brush, branches, and refuse shall, without delay, be disposed of by such of the following methods as the Engineer will direct (Engineer to strike out methods not to be used):

1. Burned
2. Piled on one side of right-of-way

3. Roller chopped and left on right-of-way in such a manner as not to obstruct roads, ditches, drains, etc.

4. Other (describe) _____

Unit No.	No. of units	Unit price			Extended price—labor & materials
		Labor	Materials	Labor & materials	
R					

Total, Section R—_____

Section UD—Underground Cable Assembly Units

An underground cable assembly unit consists of 1,000 feet of cable for underground primaries, secondaries or services. It does not include the conduit, plowing, trenching and backfilling, or the termination of the primary cable which are provided for in other assembly units. It includes the termination, connection and sealing of secondary and service cables and conductors as shown in the specifications and construction drawings, and all primary, secondary and service cable splices (buried cable may be spliced only when and where permitted by the Owner[3,4].) In computing the compensation to the Bidder for underground cable assembly units, only the distance between stakes, paralleling the cable shall be used. The number of units so computed will include all cable installed in place in all specified trenches, risers, conduits, crossings, manholes, transformers, terminal housings and meter boxes.[5] The conductor or cables listed are the manufacturer's designation of types, size, voltage rating and material. The Bidder and the Owner shall jointly perform cable acceptance tests on installed cable in accordance with the specifications using test equipment furnished by the _____. (Engineer to insert Owner or Bidder).

Unit No.	No. of units	Unit price			Extended price—labor & materials
		Labor	Materials	Labor & materials	
UD					

Total, Section UD_____

Section UG—Underground Transformer Assembly Units

An underground transformer assembly unit consists of the transformer, its housing, warning sign, switches, over-current protective devices, grounding loop, and hardware and leads with their connectors and supporting insulators installed in place. This unit includes the cable terminations but does not include lightning arresters, fault indicators, ground rods or trenching. For submersible transformers, it includes the cable terminations, the enclosure and cover, drainable material (when specified[6]), and the excavation when required. For pad-mount transformers, it does not include the pad, site preparation, drainable material, backfilling or compaction which are included in the pad assembly units.

Unit No.	No. of units	Unit price			Extended price—labor & materials
		Labor	Materials	Labor & materials	
UG					

[3] ____ Engineer check here if primary splices are permitted.

[4] ____ Engineer check here if secondary and service splices are permitted.

[5] ____ Engineer check here if 12 feet of service conductor is to be left as a coil 3 feet from the building with ends capped instead of connection to meter box.

[6] ____ Engineer check here if drainable material is specified.

Total, Section UG—_____

Section UK—Underground Secondary and Service Assembly Units

An underground secondary and service assembly unit consists of secondary or service cable terminal housing mounted in place. It includes the power pedestal, stake (when required), mounting hardware, warning sign, directional marker, housing identification marking and the cable identification tags. It does not include the cable terminations, ground rod, or pad, when required.

Unit No.	No. of units	Unit price			Extended price—labor & materials
		Labor	Materials	Labor & materials	
UK					

Total, Section UK _____

Section UM—Miscellaneous Underground Assembly Units

A miscellaneous underground assembly unit consists of an additional unit needed in the Project for new construction but not otherwise listed in the Proposal. This section includes the miscellaneous assembly units as shown on the respective underground construction drawings. Where miscellaneous units consist of or include a primary cable termination, the unit includes the preparation of the cable to accommodate the termination, the stress cone and the connection of the cable to the terminal equipment. Pad assembly units are in this section and include the site preparation, bedding, drainable material when specified, cable slot, backfilling, tamping and the pad in place.

Unit No.	No. of units	Unit price			Extended price—labor & materials
		Labor	Materials	Labor & materials	
UM					

Total, Section UM—_____

Section UR—Underground Excavation Assembly Units

UR 1–S(d) Plowing Assembly Unit, Soil—Consists of one (1) lineal foot of plowing in soil, measured parallel to the surface of the ground, to a specified depth (D), in inches, including the compacting, except as specifically provided for in other units. This unit includes all material and labor required in the repair and/or replacement of streets, roads, drives, fences, lawns, shrubbery, watermains, pipes, pipelines and contents, underground power and telephone facilities, buried sewerage and drainage facilities, and any other property damaged during the plowing of the cable, except as specifically provided for in other units. This unit does not include underground cable facilities installed in the slot.

NOTE: Where in the judgment of the Owner greater than normal difficulty will be involved in plowing because of the presence of underground facilities of other utilities, this unit will be suffixed by the letter ''T''. This will be applicable only in those areas predesignated by the Owner on the detail maps herein. All plowing outside of the predesignated area on the map, regardless of the difficulty in placement actually experienced, will be inventoried as the regular UR 1–S(D) units. If field conditions show the existence of rock to prevent the placing of the cable in soil to the depth required in the specifications, the Owner may specify UR 2–R units. Where more than one cable is to be installed in the slot, the UR1–S unit designation should be modified by a suffix corresponding to the number of cables installed. Example: UR1–S(D) 3c for 3 cables plowed at one time.

UR 2–S(D&W) Trenching Assembly Unit, Soil—Consists of one (1) lineal foot of trenching in soil, measured parallel to the surface of the ground, to a specified depth (D) and width (W), in inches, including the excavation, and backfilling and compacting. This unit includes all material and labor required in the repair and/or replacement of streets, roads, drives, fences, lawns, shrubbery, watermains, pipes, pipelines and contents, under-ground power and telephone facilities, buried sewerage and drainage facilities, and any other property damaged by the trenching, except as specifically provided for in other units. This unit does not include underground cable facilities installed in the trench or cable bedding assembly units, when required.

NOTE: Where in the judgment of the Owner greater than normal difficulty will be involved in trenching because of the presence

of underground facilities of other utilities, this unit will be suffixed by the letter ''T''. This will be applicable only in those areas predesignated by the Owner on the detail maps herein. Where more than one cable is to be installed in the trench, the regular UR 2–S unit designation should be modified by a suffix corresponding to the construction drawing for the type of cable placement desired.

UR 2–R (D&W) Trenching Assembly Unit, Rock—Consists of one (1) lineal foot of trenching in rock, measured parallel to the surface of the ground, to specified depth (D) and width(W), in inches, including the excavation, and backfilling and compacting to place cable to the depth specified in the Specifications. This unit will be specified by the Owner only when field conditions at the site show the existence of rock at a depth preventing the placing of the cable in soil to the depths required in the Specifications. This unit includes all material and labor required in the repair and/or replacement of streets, roads, drives, fences, lawns, shrubbery, watermains, pipes, pipelines and contents, underground power and telephone facilities, buried sewerage and drainage facilities, and any other property damaged by the trenching, except as specifically provided for in other units. This unit does not include underground cable facilities installed in the trench or cable bedding assembly units, when required.

UR–3 Cable Bedding Assembly Unit—Consists of one (1) lineal foot of a 2-inch bed of clean sand or soil placed in the trench under the cable and a 4-inch layer of clean sand or soil backfill over the cable to the width of the trench.

NOTE: The exact location and number of units shall be determined by the Owner after the trenches are open in those areas where rock or other conditions make special bedding necessary.

UR–4a Pavement Assembly Unit, Asphalt—Consists of the labor and material necessary to remove and restore one (1) lineal foot of asphalt pavement, measured along the route of the cable. All work shall be performed in accordance with the requirements of state or local authorities. Any trenching which may be necessary is included in this unit.

UR–4c Pavement Assembly Unit, Concrete—Consists of the labor and material necessary to remove and restore one (1) lineal foot of concrete pavement, measured along the route of the cable. All work shall be performed in accordance with the requirements of state or local authorities. Any trenching which may be necessary is included in this unit.

UR–5( ) Underground Pipe Crossing Assembly Unit—Consists of one (1) lineal foot of steel pipe, of the inside diameter, in inches, specified in the last digit of the assembly unit designation, installed in place. This unit includes the pushing of pipe and any excavation, backfilling and tamping necessary for the installation of the pipe. The pipe will be installed at the depth specified by the Owner. Underground cable installed in the pipe is not included in this unit.

UR–6 Underground Nonpipe Crossing Assembly Unit—Consists of the labor in providing a hole in soil one (1) foot in length of a diameter sufficient to accommodate the cable to be installed therein. The depth of the hole below the surface of the ground shall be specified by the Owner. This unit includes any excavation, backfilling and tamping necessary for the installation. This unit may be used where the permanent installation of a steel pipe under the UR–5 unit is not required. Underground cable installed in the hole is not included in this unit.

Unit No.	No. of units	Unit price			Extended price—labor & materials
		Labor	Materials	Labor & materials	
UR					

Total, Section UR—_____

Distribution Construction Units—Line Changes

The general heading of Line Changes applies to the changing of existing lines or portion thereof from their existing phasing, wire size, and type to new phasing, wire size, and type and the removal of existing lines or portion thereof and replacing with new lines in close proximity thereto. In general line changes involve three types of assembly units as follows:

Section H—Conversion assembly units;
Section I—Removal assembly units;
Section N—New construction assembly units on existing lines or in replacing lines.

The assembly units that are included in Section H, I, and N are defined by symbols and descriptions which follow together with the applicable descriptions included under New construction. Where the descriptions are not correct or sufficiently explicit, or when special units are not covered by Construction Drawings, descriptions have been provided by the Engineer in the respective sections.

Work included in these sections shall be performed under the schedule as set forth below: _____.

SCHEDULE OF DEENERGIZATION OF EXISTING DISTRIBUTION LINES UNDER WHICH WORK UNDER SECTIONS H, I, AND N SHALL BE PERFORMED

Line section (To be designated by point to point description on detail map)	Hours and days of week when lines will be deenergized to permit line changes

The Bidder will so plan and perform its work on the above lines that it will be possible for the Owner to safely reenergize all lines involved at the expiration of the time limits set up in the above schedule to resume service to all consumers being served prior to deenergization. Prior to commencement of work each day on lines to be deenergized, the Bidder will notify the Owner in writing thereof, designating the lines to be deenergized and upon receipt of such notice, the Owner will deenergize such lines. Upon completion of work each day on such deenergized lines, the Bidder will notify the Owner thereof in writing or in such other manner as the circumstances permit designating the lines to be reenergized and stating that such lines may be safely reenergized and upon receipt of such notice, the Owner will reenergize such lines.

Section H—Conversion Assembly Units

Conversion assembly units are pole-top assemblies and cover the furnishing of all labor and additional materials for changing an existing assembly unit to a new assembly unit, utilizing certain items of materials of the existing assembly unit on poles to be left in place. The unit prices for materials should include only additional material that is required to complete the new unit, less suitable allowance for material removed. Any materials removed from the existing assembly units which are not required in the construction of the conversion assembly unit become the property of the Bidder and may, with the permission of the Engineer, be reused by the Bidder in the construction of other assembly units called for in the Construction Contract. Conversion assembly units are specified by the prefix H with the new construction assembly unit designation shown first and the existing assembly unit designation shown last. For example, a H B1–A1 signifies the conversion of an existing A1 assembly unit to a B1 assembly unit (as was defined in the description of construction assembly units). In this instance the Bidder utilizes the existing pin-type insulator, single upset bolt and neutral spool in the construction of the new assembly unit. The Bidder furnishes the additional crossarm, crossarm pins, braces, machine bolt, carriage bolts, lag screw, and insulator required for the new unit. The Bidder takes possession of the pole-top pin and two machine bolts and with the permission of the Engineer may reuse these elsewhere in the construction of the Project. The Bidder will not be held accountable to the Owner for the materials he so acquires.

The Conversion assembly units also include the furnishing of all labor and materials in the transferring, resagging and retying of conductors from one position on the pole to a different position on the pole where such transfers are required. Where replacement of conductor is required, the existing conductor will be removed under Section I and the new conductor installed under Section N.

Where replacement of a pole is required, the existing pole and pole-top assembly will be removed under Section I and the new pole and pole-top assembly will be installed according to Section N and no H units will be involved.

Conversion assemblies are listed in three subsections for converting pole-top assemblies from single to V phase, single to three phase, and V to three phase. The following descriptions apply to only those units not sufficiently explicit.

Unit	Description
H	

Section H—Conversion Assembly Units

Subsection H (B–A) 1 Phase to V Phase

Unit No.	No. of units	Unit price			Extended price—labor & materials
		Labor	Materials	Labor & materials	
H					

Total, Section H (B–A)—_____

Section H—Conversion Assembly Units

Subsection H (C–A) 1 Phase to 3 Phase

Section H—Conversion Assembly Units

Subsection H (C–A) 1 Phase to 3 Phase

Unit No.	No. of units	Unit price			Extended price—labor & materials
		Labor	Materials	Labor & materials	
H					

Total, Subsection H (C–A)——_____

Section H—Conversion Assembly Units

Subsection H (C–B) V Phase to 3 Phase

Section H—Conversion Assembly Units

Subsection H (C–B) V Phase to 3 Phase

Unit No.	No. of units	Unit price			Extended price—labor & materials
		Labor	Materials	Labor & materials	
H					

Total, Subsection H (C-B)—_____
Total, Subsection H (B-A)—_____
Total, Subsection H (C-A)—_____
Total, Section H—_____

Section I—Removal Assembly Units

Removal assembly units cover the furnishing of all labor for the removal of existing units of construction from existing lines, disassembling into material items, and all labor and transportation for the returning of all materials to the warehouse of the Owner in an orderly manner or transporting elsewhere to the site of the Project for reuse in the prosecution of this Contract as approved by the Engineer.

The Bidder will be charged by the Owner for the full value of all materials removed under this section at the value shown in Table C. Such charges will be placed against the Bidder as units are removed and the value will be deducted from the total value of installed assembly units for determination of the work accomplished for purposes of monthly progress payments to the Bidder.

Of the materials listed in Table C to be removed from existing lines, certain materials will be reused in the construction of the Project. Such materials to be reused are listed in Table C–1. Materials other than those listed in Table C–1 shall, if not damaged in handling, be returned to the Owner for full credit at the values shown in Table D. The Bidder will be allowed full credit for all material items, other than those listed in Table C–1, returned to the Owner which, in the opinion of the Engineer, were not damaged by the Bidder in removal and handling even though the materials may not be reusable for reasons of obsolescence or deterioration. Such credits shall be allowed the Bidder as materials are returned to the Owner's warehouse and shall be added to the total value of installed assembly units for determination of the work accomplished for purposes of monthly progress payments to the Bidder.

The unit removal prices shall include all material and labor required to reinstall in accordance with specifications any conductors temporarily detached. The Bidder will reinstall at his own expense any other units removed by him for his own convenience.

The removal units are specified by the prefix I and followed by the assembly unit designation of existing assembly unit to be removed. For example, an I-A1 signifies the removal of an A1 assembly unit. The following special notes apply to specific removal units: _____.

a. Poles. All poles of the same height, regardless of pole class, are designated by the same unit. Thus an I–30-foot pole signifies the removal of a 30-foot pole of any class. The Bidder is not required under this unit to remove from the pole any ground wire or pole numbering attached to the pole. This unit includes the refilling and tamping of holes in a workmanlike manner unless they are to be reused.

b. Pole-Top Assemblies. The unit of removal of pole-top assemblies includes, in addition to the removal of the assembly itself, any necessary handling, resagging, and retying of conductors in those cases where an existing pole-top assembly will be removed and replaced by a new pole-top assembly and where any existing conductor is to be reused.

The unit of removal of pole-top assemblies also includes any holding or handling of mainline or tap conductors at tap lines, angles, and deadends where such is involved, and reinstalling of such conductor in accordance with the specifications; for example, an I-A5–4 will include the disconnection of the tap conductors, snubbing off the tap line at the nearest practical point and the reconnection and resagging of these tap conductors if necessary to the new tap assembly when installed. The new unit of construction, however, will be specified separately in Section N.

c. Conductor. The conductor removal unit covers the removal of 1,000 feet of conductor or cable and reeling or coiling it in a workmanlike manner in such a way that it can be reused by the Bidder or the Owner. The Owner will furnish to the Bidder reels if it is to be returned to the Owner's warehouse on reels. The Bidder will retain possession of all jumpers, tie wire, armor rods, connectors, and other conductor accessories removed. These items will not be returned to the Owner. The removal unit for each size of conductor or cable is shown by the prefix I followed by D and the conductor or cable type; thus an I-D–6ACWC signifies the removal unit for 1,000 feet of 6A Copperweld-copper conductor.

d. Guys. All guys regardless of length, type of attachment, or size of guy strand are specified by the same unit; thus an I-E signifies the removal of any guy.

e. Anchors. Only anchor rods are to be removed by the Bidder in anchor removal units. The anchor will be left in the ground; thus an I-F signifies the removal of any anchor rod. If the rod cannot be unscrewed, the end of the rod shall either be cut off or bent down so that the rod will be at least 18 inches below ground.

f. Transformers. The unit for removal of transformer assembly units is divided into two sections, (1) Conventional Transformer Assembly, and (2) Self-Protected Transformer Assembly. Only one unit is specified for each type, and all sizes of transformers from 1 to 25 kVA within each group will be covered by the same unit. ''Self-protected'' refers to transformers where all protective equipment is mounted on or within the transformer. ''Conventional'' refers to transformers where protective equipment is mounted separately from the transformer. The unit is designated by the prefix I followed by the description of the unit to be removed; thus IG Conventional signifies the removal of a conventional transformer assembly for any size transformer from 1 to 25 kVA.

g. Secondary Units. The unit for removal of secondary assemblies includes, in addition to the removal of the assembly itself, all necessary handling such as untying, resagging, and retying of secondary conductor or cables where existing secondary conductor or cable is to be reused.

In addition, the unit for removal of the secondary assembly includes the handling or holding of any conductor at tap lines where such is involved, and the reinstalling of such tap conductor in accordance with the specifications.

h. Service Unit. The unit for removal of service assemblies includes, in addition to the removal of the assembly itself, all necessary handling such as untying, resagging, and retying of service conductor or cable where existing service conductor or cable is to be reused.

The following descriptions apply only to those removal units not sufficiently explicit:

Unit	Description

Unit No.	No. of units	Labor	
		Unit price	Extended price

Total, Section I—_____

TABLE C.—UNIT MATERIAL VALUES OF I UNITS CHARGEABLE TO BIDDER

Unit No.	No. of units	Unit material value [1]	Extended value

Notes: 1. Unit values are based on item values from Table

TABLE C–1—MATERIAL ITEMS TO BE REUSED

RUS Item letter designation [1]	Description of material item	No. of items

Notes: 1. See ''List of Materials Acceptable for Use on Systems of RUS Electrification Borrowers''.

TABLE D. VALUES OF MATERIAL ITEMS CREDITABLE TO BIDDER

RUS Item letter designation [1]	Description of material item	Item value

Notes: 1. See ''List of Materials Acceptable for Use on Systems of RUS Electrification Borrowers''.

Section N—New Assembly Units

The purpose of this section is to list complete new units of construction where such units are to be added to existing lines or installed in replacing lines.

The units as covered by this section are the same as the units described in Distribution Construction Units—New Construction, except that these units are prefixed by the letter N.

For example, an N40–6 unit covers the furnishing of all material and labor for the installation of a 40–6 pole either in an existing distribution line being operated by the Owner or in a new line being constructed to replace an existing distribution line being operated by the Owner.

The following descriptions apply only to those new units not sufficiently explicit:

Unit	Description

Section N—New Assembly Units

Unit No.	No. of units	Unit price			Extended price—labor & materials
		Labor	Materials	Labor & materials	
N					

Total, Section N—_____

Proposal Summary

Recapitulation of Sections

New Construction

Overhead

Section—1 _____ $_____
Section—A _____ _____
Section—B _____ _____
Section—C _____ _____
Section—D _____ _____
Section—E _____ _____
Section—F _____ _____
Section—G _____ _____
Section—J _____ _____
Section—K _____ _____
Section—M _____ _____
Section—R _____ _____
Total Overhead _____

Underground

Section—UD _____ $_____
Section—UG _____ _____
Section—UK _____ _____
Section—UM _____ _____
Section—UR _____ _____
Total Underground _____
Total New Construction $_____

Line Changes

Section—H _____ $_____
Section—I _____ _____
Section—N _____ _____
Total Line Changes $_____
Total Distribution Line Construction $_____

Transmission Construction Units

Section 1—Pole Units

A pole unit consists of one pole in place. It does not include pole-top assembly unit or other parts attached to the pole. The first two digits indicate the length of the pole; the third digit shows the classification per ANSI (Example: 60–3 means a pole 60 feet long, class 3.)

Species of Timber: _____

Kind of Preservative: (Check one)

1. Creosote ___; 2. Pentachlorophenol ___; 3. Copper Naphthenate ___; 4. Waterborne preservative—CCA ___ ACZA ___

Method of Treatment: (Check one)

1. Pressure _____; 2. Thermal Process _____

Pole Plan Under Which the Poles are to be Furnished: (Check one)

1. Insured Warranted ___; 2. Independently Inspected ___; 3. Quality Assured ___; 4. Either Insured Warranted, Independently Inspected, or Quality Assured ___
(Engineer to complete above)

Unit No.	No. of units	Unit price			Extended price—labor & materials
		Labor	Materials	Labor and materials	
Total, Section 1—					

Section 2—Pole Top Assembly Units

A pole top assembly unit consists of the hardware, crossarms and their appurtenances, insulators, etc., except tie wire, required to support the power conductors and overhead ground wire. It does not include the pole, the downlead, and butt coil, which are separate units.

Unit No.	No. of units	Unit price			Extended price—labor & materials
		Labor	Materials	Labor and materials	
TH TP TS TSS					

Unit No.	No. of units	Unit price			Extended price—labor & materials
		Labor	Materials	Labor and materials	
TSZ Total, Section 2—					

Section 3—Conductor Assembly Units

A conductor assembly unit consists of 1,000 feet of a single conductor or overhead ground wire, and includes tie wire, sleeves for splicing, and armor rods with clips or armor wire where necessary. The length of conductor or overhead ground wire shall be determined by taking the sum of all straight horizontal span distances between pole stakes or from center to center of the poles carrying the conductors. The conductor sizes and types listed are the manufacturer's designation.

Unit No.	No. of units	Unit price			Extended price—labor & materials
		Labor	Materials	Labor and materials	
Total, Section 3—					

As provided for in the specifications, prior to beginning of work the Bidder will furnish the Engineer the following data on tension equipment:

Diameter Bull Wheel _____ in.
Diameter Groove _____ in.
Conductor Bending Radius _____ in.
Thickness of Neoprene at Bottom of Groove _____ in.
Stringing Sheave Diameter; Tangent _____ in., Large Angle _____ in.

Section 4—Guy Assembly Units (TG Units)

A guy assembly unit consists of the hardware and wire. Guy guards are designated separately.

Unit No.	No. of units	Unit price			Extended price—labor & materials
		Labor	Materials	Labor and materials	
TG–1 TG–2 TG–3 TG–4 TG–5 Total, Section 4—					

Section 5—Anchor Assembly Units

An anchor assembly unit consists of the anchor with rod or rods, complete, ready for attaching the guy wire.

Unit No.	No. of units	Unit price			Extended price—labor & materials
		Labor	Materials	Labor and materials	
TA–1–5 TA–1–8 TA–3 Total, Section 5—					

Section 6—Miscellaneous Assembly Units

A miscellaneous assembly unit consists of an additional unit needed in the Project for line construction but not otherwise listed in the Proposal.

Unit No.	No. of units	Unit price			Extended price—labor & materials
		Labor	Materials	Labor and materials	
TM					
Total, Section 6—					

Section 7—Right-of-Way Clearing Units

TM–12. The unit is 1,000 feet in length and _____ (_____) feet in width (to be measured _____ (_____) feet on one side of pole line or centerline of structures) of actual clearing of right-of-way. This includes clearing of underbrush, tree removal, and such tree trimming as is required so that the right-of-way, except for tree stumps which shall not exceed _____ in height, shall be clear from the ground up on one side of the line of poles carrying conductors. (See Detail A, Drawing TM–12–2A.) The length of actual clearing shall be measured in a straight line parallel to the horizontal line between poles or centerline of structures and across the maximum dimension of foliage cleared projected to the ground line. (See Detail B, Drawing TM–12–2A.) All trees and underbrush across the width of the right-of-way shall be considered to be grouped together as a single length in measuring the total length of clearing. (See Detail C, Drawing TM–12–2A.) Spaces along the right-of-way in which no trees are to be removed or trimmed or underbrush cleared shall be omitted from the total measurement. All length thus arrived at, added together and divided by 1,000 shall give the number of 1,000-foot TM–12 units of clearing. The Bidder shall not remove or trim shade, fruit, or ornamental trees unless so directed by the Engineer in writing.

TM–12 (1). This unit is identical with TM–12, except the full width of the right-of-way to be cleared shall be _____ (_____) feet wide (to be measured _____ (_____) feet on each side of the pole line or centerline of structures). (See Detail D, Drawing TM–12–2A.) TMC–12, TMC–12 (1). These units are identical to the respective TM units except that chemical treatment of stumps is required in addition to the clearing of underbrush, tree removal and tree trimming.

TM–13. The unit, for purpose of quoting, is 1,000 feet in length of clearing off the right-of-way. The Engineer will select those trees off the right-of-way that he deems to be a hazard to the line and will designate them to the Bidder in writing as danger trees. When so designated, the Bidder shall remove or top such trees at his option except that the Bidder shall trim and not remove shade, fruit, or ornamental trees unless otherwise directed by the Engineer in writing. (See Drawings TM–12–2A and TM–13 for examples of danger trees.)

The measurement of the length of clearing off the right-of-way shall be considered as a straight line parallel to the horizontal line between poles or centerline of structures, such measurement of length to be based on maximum dimension of foliage (not trunk) projected to the ground line. (See Details E, F, G, and H, Drawing TM–12–2A.) Dead trees having no foliage shall be measured across the maximum dimension and multiplied by two. (See Detail F, Drawing TM–12–2A.) Each tree so removed shall be added together to determine the total length of clearing. All length thus arrived at, added together and divided by 1,000, shall give the number of TM–13 units. (Example: Details E, F, G, and H, Drawing TM–12–2A, total .1 of a TM–13 unit.)

TM–14. The unit is 1,000 feet in length and _____ (_____) feet in width (to be measured _____ (_____) feet on one side of right-of-way centerline) of actual clearing of right-of-way. Trees and underbrush should be cleared from the ground up within 10 feet of any structure location. The Engineer will mark the trees and brush to be cleared to provide ''undulating'' boundaries. Low growing trees and brush are to be left in the right-of-way to the extent it will not be hazardous to the line or will not interfere with the access road. The length of actual clearing shall be measured in a straight line parallel to the horizontal line between poles or centerline of structures and across the maximum dimension of foliage cleared projected to the ground line (See Detail B, Drawing TM–12–2A.) All trees and underbrush cleared across the right-of-way shall be considered to be grouped together as a single length in measuring the total length of clearing (See Detail C, Drawing TM–12–2A.) Spaces along the right-of-way in which no trees are to be removed or trimmed or underbrush cleared shall be omitted from the total measurement.

TM–14 (1). This unit is identical with TM–14 except the full width of the right-of-way to be cleared shall be _____ (_____) feet in width (to be measured _____ (_____) feet wide (See Detail D, Drawing TM–12–2A.)

TM–15. The unit is 1,000 feet in length and _____ (_____) feet in width (to be measured _____ (_____) feet on one side of the right-of-way centerline) of actual clearing of the right-of-way. Trees and underbrush should be cleared from ground up within 10 feet of any structure location. The Engineer will mark the trees and brush to be cleared to provide a ''feathered'' appearance in the right-of-way. Low growing trees and brush are to be

left in the right-of-way to the extent it will not be hazardous to the line or will not interfere with the access road.

The length of actual clearing shall be measured in a straight line parallel to the horizontal line between poles or centerline of structures and across the maximum dimension of foliage cleared projected to ground line (See Detail B, Drawing TM–12–2A). All trees and underbrush cleared across the right-of-way shall be considered to be grouped together as a single length in measuring the total length of clearing (See Detail C, Drawing TM–12–2A). Spaces along the right-of-way which no trees are to be removed or trimmed or underbrush cleared shall be omitted from the total measurement.

TM–15 (1). This unit is identical to TM–15 except the full width of the right-of-way to be cleared shall be _____ (_____) feet wide (See Detail D, Drawing TM–12–2A).

Additional Requirements (When specifying TM units denote type of disposal (A or B).)

A. Trees, brush, branches and refuse shall, without delay, be disposed of by such of the following methods as the Engineer will direct (Engineer to strike out methods not to be used):

1. Burned
2. Piled on one side of right-of-way
3. Roller chopped and left on right-of-way in such a manner as not to obstruct roads, ditches, drains, etc.
4. Other (describe) _____

B. Trees that are felled shall be cut to commercial wood lengths, stacked neatly, and left on the right-of-way for the landowner. Commercial wood length means the length designated by the Engineer but in no case shall it be required to be less than _____ (_____) feet. Brush, branches, and refuse shall, without delay, be disposed of by such of the following methods as the Engineer will direct (Engineer to strike out methods not to be used):

1. Burned
2. Piled on one side of right-of-way
3. Roller chopped and left on right-of-way in such a manner as not to obstruct roads, ditches, drains, etc.
4. Other (describe) _____

Unit No.	No. of units	Unit price			Extended price—labor & materials
		Labor	Materials	Labor and materials	
Total, Section 6—					

Proposal Summary

Recapitulation of Sections:

Section—1 _____ $_____
Section—2 _____ _____
Section—3 _____ _____
Section—4 _____ _____
Section—5 _____ _____
Section—6 _____ _____
Section—7 _____ _____
Total Transmission Line Construction _____

Section 8—Substation Assembly Units

Description of Construction Units. Each Construction Unit consists of a complete installation of the designated portion of a substation as specified on the drawings, together with connections to associated equipment. Each Construction Unit represents all labor and material including necessary accessories completely installed and tested in satisfactory operation. Full identification of each Construction Unit and all necessary specifications of the installation is shown on the drawings.

Items of material in each Construction Unit shall be of the designated size, rating, type, voltage, or other specification in accordance with the drawings. The bill of material drawing for each substation shows the identification of the Construction Units under which the material is to be installed and shows which items of material may be partly or entirely found on the lists of Owner-furnished materials. All items of equipment, unless otherwise specified, are mounted on a structure which shall be a Construction Unit of Group A.

Each Construction Unit is designated by the letter of the Group to which it belongs and an identifying number. The same item of equipment carries the same Construction Unit designation in all the substations. Items of equipment designated by the same Construction Unit in one substation are of only one kind as to voltage, type and other specifications. The tabulation of Construction units for each substation is separate and contains all units necessary for construction of that substation.

Group A. Structures. A Construction Unit consists of a structure, or structures, with bus supports including insulators and fittings, buses, conductors and overhead ground wires to adjacent structures within the substation, grounding material to connect equipment with the ground bus, and associated material including mounting brackets, supports for equipment, clamps and connectors, all as specified in the drawings.

Group B. Three-Pole Group Operated Air Break Switches. A Construction Unit consists of one 3-pole group operated air break switch with all accessories and operating mechanisms as specified in the drawings.

Group C. Lightning Arresters. A Construction Unit consists of one single arrester.

Group D. Single Pole Disconnecting Switches. A Construction Unit consists of one single pole disconnecting or by-pass switch as specified in the drawings. If a fuse disconnect switch is specified, the fuse is included with the switch.

Group E. Oil Circuit Breakers. A Construction Unit consists of one complete three-phase power circuit breaker complete with supporting frame and control cabinet, unless shown otherwise in the drawings, mounted as specified in the drawings.

Group F. Oil Circuit Reclosers. A Construction Unit consists of a complete single-phase or three phase oil circuit recloser as specified in the drawings.

Group G. Meters, Relays and Instrument Transformers. A Construction Unit consists of one meter, relay potential transformer or current transformer.

Group H. Transformers. A Construction Unit consists of one power transformer or one station service transformer either single-phase or three-phase as specified in the drawings.

Group I. Voltage Regulators. A Construction Unit consists of one single-phase or three-phase voltage regulator as specified in the drawings.

Group J. Communications and Supervisory Control Equipment. A Construction Unit consists of carrier current equipment, microwave, or other types of communications and supervisory control equipment as specified in the drawings.

Group K. Conduit and Cable. A Construction Unit consists of the wire, cable, conduit and accessories necessary to complete the installation of equipment in accordance with the specifications and drawings, where such installation has not been included in other Groups.

Group L. Foundations. A Construction Unit consists of concrete footings and foundations except for the fence, as specified in the drawings.

Group M. Site Preparation. A Construction Unit consists of clearing, grading, drainage work, and surfacing, as specified in the drawings.

Group N. Fence. A Construction Unit consists of the complete installation of the fence, gates, etc., as specified in the drawings.

Group O. Station Grounding. A Construction Unit consists of the complete ground bus including ground rods, grounding mats or platforms, except as otherwise provided in other Groups, with connections to structures, equipment, and fence as specified in the drawings.

Group P. Building. A Construction Unit consists of a control building or cabinet, on a foundation of Group L and the facilities and equipment installed therein as specified in the drawings, except as otherwise provided in other Groups.

Other Groups. The Engineer shall specify such additional Groups as may be necessary for the completion of the Project. Description of these Groups shall be provided by an addition to this Section of the Specifications for Construction.

_____ Station Construction Units

Unit No. _____
Name and Description of Construction Unit _____
No. of Units _____
Unit Prices
Labor _____
Materials _____
Labor and Materials _____
Extended Price—Labor and Materials _____
Total Price _____

Proposal Summary

_____ Substation $_____
_____ Substation _____
_____ Substation _____
_____ Switching Station _____
_____ Switching Station _____
Total Station Construction $_____

Proposed Recapitulation

Distribution line construction $_____
Transmission line construction _____
Substation and Switching Station Construction _____
Total $_____

Acceptance

The Owner hereby accepts the foregoing Proposal of the Bidder, _____ for the construction of the following:

Distribution Construction Units: Sections: _____
Transmission Construction Units: Sections: _____
Substation and Switching Station Construction: Stations (name): _____
_____ Owner
By _____ President
_____ Secretary
_____ Date of Contract

[End of clause]

§ 1726.352 Electric transmission construction contract (labor and materials), RUS Form 831.

The contract form in this section shall be used when required by this

part. This form refers to guide drawings, which do not contain requirements, and, hence, are not included in this part. The guide drawings are included in the printed form available from GPO (See § 1726.300.).

ELECTRIC TRANSMISSION CONSTRUCTION CONTRACT (LABOR AND MATERIALS)

Notice and Instructions to Bidders

1. Sealed proposals for the construction, including the supply of necessary labor, materials and equipment, of a rural electric project of _____ (hereinafter called the ''Owner'') to be known as Project will be received by the Owner on or before _____ o'clock _____ M., _____, 19_____ at its office at _____ at which time and place the proposals will be publicly opened and read. Any proposal received subsequent to the time specified will be promptly returned to the Bidder unopened.

2. Description of Project: The Project will consist of approximately:

Transmission Line Construction

_____ miles _____ kV; _____ miles _____ kV

_____ miles _____ kV underbuild

Substations and Other Major Facilities

_____ kVA _____ Voltage _____ Name

The Project is located in _____ Counties, in the State of _____ all as more fully described in the Plans, Specifications, Construction Drawings and Contractor's Proposal therefore hereinafter referred to.

3. Owner Furnished Materials. The unit prices in the Contractor's Proposal shall include provisions for Owner Furnished Materials since as stated in Article 1, Section 3 of the Contractor's Proposal, the value of the Owner Furnished Materials, if any, will be deducted from payments to the Bidder for completed Construction Units.

4. Obtaining Documents. The Plans, Specifications and Construction Drawings together with all necessary forms and other documents for bidders may be obtained from the Owner, or from the Engineer, _____ at the latter's office at _____ upon the payment of $_____, which payment will not be subject to refund. The Plans, Specifications and Construction Drawings may be examined at the office of the Owner or at the office of the Engineer. A copy of the Loan Contract (if the Project is to be financed, in whole or in part, pursuant to a loan contract) between the Owner and the United States of America acting through the Administrator of the Rural Utilities Service (hereinafter called the Administrator) and of the loan contract between the Owner and any other lender may be examined at the office of the Owner. Each set of Plans, Specifications and Construction Drawings will have a serial number, given by the Engineer, and the number of each set with the name of the Purchaser will be recorded by the Engineer. Bids will be accepted only from the original purchaser.

5. Manner of Submitting Proposals. Proposals and all supporting instruments must be submitted on the forms furnished by the Owner and must be delivered in a sealed envelope addressed to the Owner. The name and address of the Bidder, its license number if a license is required by the State, and the date and hour of the opening of bids must appear on the envelope in which the Proposal is submitted. Proposals must be filled in in ink or typewritten. No alterations or interlineations will be permitted, unless made before submission, and initialed and dated.

6. Familiarity with Conditions. Prior to the submission of the Proposal the Bidder shall make and shall be deemed to have made a careful examination of the site of the Project and of the Plans, Specifications, Construction Drawings, and forms of Contractor's Proposal and Contractor's Bond on file with the Secretary of the Owner and with the Engineer, and shall become informed as to the location and nature of the proposed construction, the transportation facilities, the kind and character of soil and terrain to be encountered, the kind of facilities required before and during the construction of the Project, general local conditions and all other matters that may affect the cost and the time of completion of the Project. Bidders will be required to comply with all applicable statutes, regulations, etc., including those pertaining to the licensing of contractors, and the so-called ''Kickback Statute'' (48 Stat. 948) and regulations issued pursuant thereto.

7. Proposals will be accepted only from those prequalified bidders invited by the Owner to submit a proposal.

8. Alternate Designs. The Owner reserves the right to confine its consideration of the several bids to one type of design regardless of alternate types of design which may be specified in the Plans and Specifications and offered in the Proposals.

9. The Time for Completion of Construction of the Project shall be as specified by the Engineer in the Proposal.

10. Bid Bond. Each Proposal must be accompanied by a Bid Bond in the form attached or a certified check on a bank that is a member of the Federal Deposit Insurance Corporation, payable to the order of the Owner, in an amount equal to ten percent (10%) of the maximum bid price. Each Bidder agrees, provided its Proposal is one of the three low Proposals, that, by filing its Proposal together with such Bid Bond or check in consideration of the owner's receiving and considering such Proposals, said Proposal shall be firm and binding upon each such

Bidder and such Bid Bond or check shall be held by the Owner until a Proposal is accepted and a satisfactory Contractor's Bond is furnished (where required) by the successful Bidder and such acceptance has been approved by the Administrator, or for a period not to exceed sixty (60) days from the date hereinbefore set for the opening of Proposals, whichever period shall be the shorter. If such Proposal is not one of the three low Proposals, the Bid Bond or check will be returned in each instance within a period of ten (10) days to the Bidder furnishing same.

11. Contractor's Bond. The successful Bidder will be required to execute two additional counterparts of the Proposal and, for a Contract in excess of $100,000, to furnish a Contractor's Bond in triplicate in the form attached hereto with sureties listed by the United States Treasury Department as Acceptable Sureties, in a penal sum not less than the contract price.

12. Failure to Furnish Contractor's Bond. Should the successful Bidder fail or refuse to execute such counterparts or to furnish a Contractor's Bond (where required) within ten (10) days after written notification of the acceptance of the Proposal by the Owner, the Bidder will be considered to have abandoned the Proposal. In such event, the Owner shall be entitled (a) To enforce the Bid Bond in accordance with its terms, or (b) if a certified check has been delivered with the Proposal, to retain from the proceeds of the certified check, the difference (not exceeding the amount of the certified check) between the amount of the Proposal and such larger amount for which the Owner may in good faith contract with another party to construct the Project. The term ''Successful Bidder'' shall be deemed to include any Bidder whose Proposal is accepted after another Bidder has previously refused or has been unable to execute the counterparts or to furnish a satisfactory Contractor's Bond (where required.)

13. Contract is Entire Agreement. The Contract to be effected by the acceptance of the Proposal shall be deemed to include the entire agreement between the parties thereto, and the Bidder shall not claim any modification thereof resulting from any representation or promise made at any time by any officer, agent or employee of the Owner or by any other person.

14. Minor Irregularities. The Owner reserves the right to waive minor irregularities or minor errors in any Proposal, if it appears to the Owner that such irregularities or errors were made through inadvertence. Any such irregularities or errors so waived must be corrected on the Proposal in which they occur prior to the acceptance thereof by the Owner.

15. Balanced Bid. The Owner reserves the right to reject any or all Proposals. The attention of Bidders is specially called to the desirability of a proper balance between prices for labor and materials and between the total prices for the respective Construction Units. Lack of such balance may be considered as a reason for rejecting a Proposal.

16. Discrepancy in Unit Prices. Where the unit prices in the Contractor's Proposal are separated into three columns designated as ''Labor,'' ''Materials'' and ''Labor and Materials,'' and where a discrepancy appears between the sum shown in the ''Labor and Materials'' column and the correct addition of the sums appearing in the ''Labor'' column and the ''Materials'' column, the correct addition of the sums appearing in the ''Labor'' column and the ''Materials'' column shall control.

17. Definition of Terms. The terms ''Administrator,'' ''Engineer,'' ''Supervisor,'' ''Project,'' ''Completion of Construction'' and ''Completion of the Project'' as used throughout this Contract shall be as defined in Article VI, Section 1, of the Contractor's Proposal.

18. The Owner Represents:

a. If by provisions of the Contractor's Proposal the Owner shall have undertaken to furnish any materials for the construction of the Project, such materials are on hand at locations specified or if such materials are not on hand they will be made available by the Owner to the successful Bidder at the locations specified before the time such materials are required for construction.

b. All easements and rights-of-way, except as shown on maps included in the Plans and Specifications, have been obtained from the owners of the properties across which the Project is to be constructed (including tenants who may reasonably be expected to object to such construction). The remaining easements and rights-of-way, if any, will be obtained as required to avoid delay in construction.

c. All staking, except as shown on the maps included in the Plans and Specifications, has been completed and sufficient staking crews will be available to maintain stakes at all times in advance of construction.

d. Prompt payment for the construction of the Project will be made with funds pursuant to the Loan Contract, or with funds otherwise available to the Owner.

If the Owner shall fail to comply with any of the undertakings contained in the foregoing representations or if any of such representations shall be incorrect, the Bidder will be entitled to an extension of time of completion for a period equal to the delay, if any, caused by the failure of the Owner to comply with such undertakings or by any such incorrect representation; provided the Bidder shall have promptly notified the Owner in writing of its desire to extend the time of completion in accordance with the

foregoing; provided, however, that such extension, if any, of the time and completion shall be the sole remedy of the Bidder for the Owner's failure, because of conditions beyond the control and without the fault of the Owner, to furnish materials in accordance with subparagraph a hereof.

_____ Owner
By _____
_____, 19____

Contractor's Proposal

(Proposal shall be submitted in ink or typewritten)
To: _____ (Hereinafter called the ''Owner'')

Article I—General

Section 1. Offer to Construct. The undersigned (hereinafter called the ''Bidder'') hereby proposes to receive and install such materials and equipment as may hereinafter be specified to be furnished by the Owner, and to furnish all other materials and equipment, all machinery, tools, labor, transportation and other means required to construct the rural electric project _____ in strict accordance with the Plans, Specifications and Construction Drawings therefor, attached hereto and made a part hereof, for the prices hereinafter stated. The total length of the project lines shall be determined by taking the sum of all straight horizontal span distances between pole stakes or from center to center of poles, or centerline of structures, carrying conductors.

Section 2. Materials and Equipment. The Bidder agrees to furnish and use in the construction of the Project under this Proposal, in the event the Proposal is accepted, only such materials and equipment as are included in the current ''List of Materials Acceptable for Use on Systems of RUS Electrification Borrowers,'' including revisions adopted prior to the Bid Opening.

The Bidder further agrees to furnish:

	Type	Size	Galvanizing class
Overhead ground wire Guy wire Structure ground wire			

(Engineer to insert Type, Size and Galvanizing Class as appropriate)

The Bidder further agrees to furnish and use poles, crossarms, and other timber products, of which the physical characteristics, method of treatment, type of preservative, instructions on inspection and general procedure shall be in accordance with RUS standards and requirements.

Crossarms shall be _____ (Engineer to insert Douglas Fir or Southern Yellow Pine), treated with _____

(Engineer to insert type of preservative.)

Section 3. Owner-Furnished Materials. The Bidder understands and agrees that, if this Proposal is accepted, the Owner will furnish to the Bidder the material set forth in the attached ''List of Owner's Materials on Hand'' (see page ____) and the Bidder will give a receipt (see page ____) therefor in writing to the Owner. The Bidder, further, will on behalf of the Owner accept delivery of such of the materials set forth in the attached ''List of Materials Ordered by Owner but Not Delivered'' (see page ____) as may be subsequently delivered and will promptly forward to the Owner for payment the supplier's invoice, together with the Bidder's receipt in writing for such materials. The materials referred to are on hand at, or will be delivered to, the locations specified in the Lists and the Bidder will use such materials in constructing the Project.

The value of the completed Construction Units certified by the Bidder each month pursuant to Article III, Section 1(a) of this Proposal shall be reduced by an amount equal to the value of the materials installed by the Bidder during the preceding month which have been furnished by the Owner or the delivery of which has been accepted by the Bidder on behalf of the Owner. Only ninety percent (90%) of the remainder shall be paid prior to the Completion of the Project. The value of such materials shall be computed on the basis of the unit prices stated in the Lists, Materials, if any, not required for the Project, which have been furnished to the Bidder by the Owner or delivery of which has been accepted by the Bidder on behalf of the Owner, shall be returned to the Owner by the Bidder upon completion of construction of the Project. The value of all materials not installed in the Project nor returned to the Owner shall be deducted from the final payment to the Bidder.

The Owner shall not be obligated to furnish materials in excess of the quantities, size, kind and type set forth in the attached Lists. If the Owner furnished, and the Bidder accepts, materials in excess therefor, the values of such excess materials shall be their actual cost as stated by the Owner.

Information on the shipping schedules of materials on the ''List of Materials Ordered by Owner But Not Delivered'' will be furnished to the Bidder as necessary during progress of the work.

Upon delivery the Bidder shall promptly receive, unload, transport and handle all materials and equipment on the ''List of Materials Ordered by Owner But Not Delivered'' at its expense and shall be responsible for demurrage, if any.

Section 4. Purchase of Materials Not Furnished by Owner. The Bidder will purchase all materials and equipment (other than owner-furnished materials) outright and not subject to any conditional sales agreements, bailment, lease or other agreement reserving

unto the seller any right, title or interest therein. All such materials and equipment shall become the property of the Owner when erected in place.

Section 5. Proposal on Unit Basis. The Bidder understands and agrees that the various Construction Units on which bids are made are defined by symbols and descriptions in this Proposal, that all said bids are on a unit basis, and that the Owner may specify any number or combination of Construction Units that the Owner may deem necessary for the construction of the Project. Separate Construction Units are designated for each different arrangement which may be used in the construction of the Project. This Proposal is based on a consideration of each unit in place and includes only the materials listed on the corresponding Construction Drawings or description of unit where no drawing exists.

Section 6. Description of Contract. The Notice and Instructions to Bidders and Plans attached hereto and made a part hereof, and the Specifications and Construction Drawings set forth in the Electric Transmission Specifications & Drawings, RUS Form 805, as applicable, together with the Proposal and Acceptance constitute the Contract. The plans, consisting of maps and special drawings, are identified as follows: _____.

Section 7. Familiarity with Conditions. The Bidder has made a careful examination of the site of the Project to be constructed and of the Plans, Specifications, Construction Drawings, and form of Contractor's Bond attached hereto, and has become informed as to the location and nature of the proposed construction, the transportation facilities, the kind and character of soil and terrain to be encountered, and the kind of facilities required before and during the construction of the Project, and has become acquainted with the labor conditions, state and local laws and regulations which would affect work on the proposed construction.

Section 8. License. The Bidder warrants that a Contractor's License is ___ is not ___ required, and if required it possesses Contractor's License No. _____ for the State of _____ in which the Project is located and said license expires on _____, 19___.

Section 9. The Bidder warrants that this Proposal is made in good faith and without collusion or connection with any person or persons bidding for the same work.

Section 10. The Bidder warrants that it possesses adequate financial resources and agrees that in the event this Proposal is accepted and a Contractor's Bond is required, it will furnish a Contractor's Bond in the form attached hereto, in a penal sum not less than the maximum Contractor price, with a surety or sureties listed by the United States Treasury Department as Acceptance Sureties.

In the event that the surety or sureties on the performance bond delivered to the Owner contemporaneously with the execution of the Contract or on any bond or bonds delivered in substitution therefor or in addition thereto shall at any time become unsatisfactory to the Owner or the Administrator, the Bidder agrees to deliver to the Owner another or an additional bond.

Section 11. Taxes. The unit prices for Construction Units in this Proposal include provisions for the payment of all monies which will be payable by the Bidder or the Owner in connection with the construction of the Project on account of taxes imposed by any taxing authority upon the sale, purchase or use of materials, supplies and equipment, or services or labor of installation thereof, to be incorporated in the Project as part of such Construction Units. The Bidder agrees to pay all such taxes, except taxes upon the sale, purchase or use of owner-furnished materials and it is understood that, as to owner-furnished materials, the values stated in the attached ''List of Owner's Materials on Hand'' and ''List of Materials Ordered by Owner But Not Delivered'' include taxes upon the sale, purchase or use of owner-furnished materials, if applicable. The Bidder will furnish to the appropriate taxing authorities all required information and reports pertaining to the Project, except as to the owner-furnished materials.

Section 12. Changes in Quantities. The Bidder understands and agrees that the quantities called for in this Proposal are approximate, and that the total number of units upon which payment shall be made shall be as set forth in the Inventory. If the Owner changes the quantity of any Assembly Unit or Assembly Units specified in this Proposal by more than 15%, and the materials cost to the Bidder is increased thereby to an extent which would not be adequately compensated by application of the unit prices in this Proposal to the revised quantity of such unit or units, such change, to the extent of the quantities of such units in excess of such 15%, shall be regarded as a change in the construction within the meaning of Article II, Section 1(d) of this proposal.

Section 13. Description of Contract. The Notice and Instructions to Bidders, Plans, Specifications for Construction and Construction Drawings, all attached hereto and made a part hereof together with the Proposal and Acceptance constitute the contract. The Plans and Construction Drawings are identified as follows: _____

LIST OF OWNER'S MATERIALS ON HAND

Item [1]	Description of material	Catalog No.	Quantity	Unit price	Extended price
Total Above materials are located at:					

Notes: 1. Item corresponds with item in list of materials in construction drawings. Under Article I, Section 3, the value of these materials will be deducted from payments to the Bidder for completed Construction Units.

LIST OF MATERIALS ORDERED BY OWNER BUT NOT DELIVERED

Item [2]	Supplier name and address	Scheduled delivery date	Description of material	Catalog No.	Quantity	Unit price	Extended price
Total Above material to be delivered to:							

Notes: 2. Item corresponds with item in list of materials in construction drawings. Under Article I, Section 3, the value of these materials will be deducted from payments to the Bidder for completed Construction Units.

Article II—Construction

Section 1. Time and Manner of Construction

a. The Bidder agrees to commence construction of the Project on a date (hereinafter called the ''Commencement Date'') which shall be determined by the Engineer after notice in writing of approval of the Contract by the Administrator and notice in writing from the Bidder that the Bidder has sufficient materials to warrant commencement and continuation of construction, but in no event will the Commencement Date be later than ___ calendar days after date of approval of the Contract by the Administrator. The Bidder further agrees to prosecute diligently and to complete construction in strict accordance with the Plans, Specifications and Construction Drawings within ___ (___) calendar days (excluding Sundays) after Commencement Date: Provided, however, that the Bidder will not be required to dig holes, set poles or install anchors if there are more than six (6) inches of frost in the ground nor to perform any construction on such days when in the judgment of the Engineer snow, rain, or wind, or the results of snow, rain, or frost make it impracticable to perform any operation of construction and to the extent of the time lost due to the conditions described herein and approved in writing by the Engineer, the time of completion set out above will be extended if the Bidder makes a written request therefor to the Owner as provided in subsection b of this Section 1.

b. The time for Completion of Construction shall be extended for the period of any reasonable delay which is due exclusively to causes beyond the control and without the fault of the Bidder, including Acts of God, fires, floods, inability to obtain materials and acts or omissions of the Owner with respect to matters for which the Owner is solely responsible: *Provided, however,* that no such extension of time for completion shall be granted the Bidder unless within ten (10) days after the happening of any event relied upon by the Bidder for such an extension of time the Bidder shall have made a request therefor in writing to the Owner, and provided further that no delay in such time of completion or in the progress of the work which results from any of the above causes except acts or omissions of the Owner, shall result in any liability on the part of the Owner.

c. The sequence of construction shall be as set forth below, the numbers or names being the designations of extensions or areas (hereinafter called the ''Sections'') corresponding to the numbers or names shown on the maps attached hereto, or if no Sections are set forth below, the sequence of construction shall be as determined by the Bidder, subject to the approval of the Engineer. _____

d. The Owner, acting through the Engineer and with the approval of the Administrator,[1] may from time to time during the progress of the construction of the Project make such changes in, additions to or subtractions from the Plans, Specifications, Construction Drawings, List of Materials and sequence of

[1] As long as the total price of this contract including all amendments is less than 120 percent of the original contract price as stated in the acceptance hereto, amendments executed on RUS Form 238 are not subject to the approval of the Administrator. Whenever an amendment to this contract causes the total amended contract to exceed 120 percent of the original contract price, that amendment and all subsequent amendments to this contract shall be made subject to the approval of the Administrator.

construction provided for in the previous paragraph which are part of the Contractor's Proposal as conditions may warrant: Provided, however, that if any change in the construction to be done shall require an extension of time, a reasonable extension will be granted if the Bidder shall make a written request therefor to the Owner within ten (10) days after any such change is made. And provided further, that if the cost to the Bidder of construction of the Project shall be materially increased by any such change or addition, the Owner shall pay the Bidder for the reasonable cost thereof in accordance with a Construction Contract Amendment signed by the Owner and the Bidder and approved by the Administrator,[2] but no claim for additional compensation for any such change or addition will be considered unless the Bidder shall have made a written request therefor to the Owner prior to the commencement of work in connection with such change or addition.

e. The Bidder will not perform any work hereunder on Sundays unless there is urgent need for such Sunday work and the Owner consents thereto in writing. The time for completion specified in subsection a of this Section 1 shall not be affected in any way by inclusion of this subsection nor by the Owner's consent or lack of consent to Sunday work hereunder.

Section 2. Environmental Protection. The Bidder shall perform work in such a manner as to maximize preservation of beauty, conservation of natural resources and minimize marring and scarring of the landscape and silting of streams. The Bidder shall not deposit trash in streams or waterways, and shall not deposit herbicides or other chemicals or their containers in or near streams, waterways or pastures. The Bidder shall follow, under the general direction of the Engineer, the criteria relating to environmental protection as specified herein by the Engineer.

Section 3. The Bidder agrees that in the event this Proposal is accepted it will make available for use in connection with the proposed construction all necessary tools and equipment and qualified superintendents and foremen.

Section 4. Changes in Construction. The Bidder agrees to make such changes in construction previously installed in the Project by the Bidder as required by the Owner for prices arrived at as follows:

a. For substations and other units where only a portion of the complete unit is affected by the change, the compensation for such change shall be as agreed upon in writing by the Bidder and the Owner and approved by the Administrator[3] prior to the commencement of work in connection with such change.

b. For all other units, the compensation for such change shall be the reasonable cost thereof as agreed upon in writing by the Bidder and the Owner prior to the commencement of work in connection with such change, but in no event shall it exceed two (2) times the labor price quoted in the Proposal for the installation of the unit to be changed. Such compensation shall be in lieu of any other payment for the installation and removal of the original unit. (If a new or replacing unit is installed, payment for such new or replacing unit shall be made as shown in the final inventory.)

No payment shall be made to the Bidder for materials or labor involved in correcting errors or omissions on the part of the Bidder which result in construction not in accordance with the Plans and Specifications.

Section 5. Construction Not in Proposal. The Bidder also agrees that when it is necessary to construct units not shown in the Proposal it will construct such units for a price arrived at as follows:

a. The cost of materials shall be determined by the invoices.

b. The cost of labor shall be the reasonable cost thereof, but in no event shall it exceed an amount determined by calculating the ratio of the total labor costs to the total material costs in the section of the Proposal involved, and multiplying the cost of materials for the unit in question by this ratio.

Section 6. Supervision and Inspection.

a. The Bidder shall cause the construction work on the Project to receive constant supervision by a competent superintendent (hereinafter called the ''Superintendent'') who shall be present at all times during working hours where construction is being carried on. The Bidder shall also employ, in connection with the construction of the Project, capable, experienced and reliable foremen and such skilled workmen as may be required for the various classes of work to be performed. Directions and instructions given to the Superintendent shall be binding upon the Bidder.

b. The Owner reserves the right to require the removal from the Project of any employee of the Bidder if in the judgment of the Owner such removal shall be necessary in order to protect the interest of the Owner. The Owner or the Supervisor, if any, shall have the right to require the Bidder to increase the number of its employees and to increase or change the amount or kind of tools and equipment if at any time the progress of the work shall be unsatisfactory to the Owner or Supervisor; but the failure of the Owner or Supervisor to give any such directions shall not relieve the Bidder of its obligations to complete the work within the time and in the manner specified in this Proposal.

[2] See Footnote 1.

[3] See Footnote 1.

c. The manner of construction of the Project, and all materials and equipment used therein, shall be subject to the inspection, tests and approval of the Owner and the Administrator, and the Bidder shall furnish all information required by the Owner or by the Administrator concerning the nature or source of any materials incorporated or to be incorporated in the Project. The Owner and the Administrator shall have the right to inspect all payrolls, invoices of materials, and other data and records of the Bidder and of any subcontractor, relevant to the construction of the Project. The Bidder shall provide all reasonable facilities necessary for such inspection and tests and shall maintain an office at the site of the Project, with telephone service where obtainable and at least one office employee to whom directions and instructions of the Owner may be delivered. Delivery of such directions or instructions in writing to the employee of the Bidder at such office shall constitute delivery to the Bidder. The Bidder shall have an authorized agent accompany the Engineer when final inspection is made and, if requested by the Owner, when any other inspection is made.

d. In the event that the Owner, or the Administrator, shall determine that the construction contains or may contain numerous defects, it shall be the duty of the Bidder and the Bidder's Surety or Sureties, if any, to have an inspection made by an engineer approved by the Owner and the Administrator for the purpose of determining the exact nature, extent and location of such defects.

e. The Engineer may recommend to the Owner that the Bidder suspend the work wholly or in part for such period or periods as the Engineer may deem necessary due to unsuitable weather or such other conditions as are considered unfavorable for the satisfactory prosecution of the work or because of the failure of the Bidder to comply with any of the provisions of the Contract: Provided, however, that the Bidder shall not suspend work pursuant to this provision without written authority from the Owner so to do. The time of completion hereinabove set forth shall be increased by the number of days of any such suspension, except when such suspension is due to the failure of the Bidder to comply with any of the provisions of this Contract. In the event that work is suspended by the Bidder with the consent of the Owner, the Bidder before resuming work shall give the Owner at least twenty-four (24) hours notice thereof in writing.

Section 7. Defective Materials and Workmanship.

a. The acceptance of any materials, equipment (except owner furnished materials) or any workmanship by the Owner or the Engineer shall not preclude the subsequent rejection thereof if such materials, equipment, or workmanship shall be found to be defective after delivery or installation, and any such materials, equipment or workmanship found defective before final acceptance of the construction shall be replaced or remedied, as the case may be, by and at the expense of the Bidder. Any such condemned material or equipment shall be immediately removed from the site of the Project by the Bidder at the Bidder's expense. The Bidder shall not be entitled to any payment hereunder so long as any defective materials, equipment or workmanship in respect to the Project, of which the Bidder shall have had notice, shall not have been replaced or remedied, as the case may be.

b. Notwithstanding any certificate which may have been given by the Owner or the Engineer, if any materials, equipment (except owner-furnished materials) or any workmanship which does not comply with the requirements of this Contract shall be discovered within one (1) year after Completion of Construction of the Project, the Bidder shall replace such defective materials or equipment or remedy any such defective workmanship within thirty (30) days after notice in writing of the existence thereof shall have been given by the Owner. If the Bidder shall be called upon to replace any defective materials or equipment or to remedy defective workmanship as herein provided, the Owner, if so requested by the Bidder shall deenergize that section of the Project involved in such work. In the event of failure by the Bidder so to do, the Owner may replace such defective materials or equipment or remedy such defective workmanship, as the case may be, and in such event the Bidder shall pay to the Owner the cost and expense thereof.

Article III—Payments and Release of Liens

Section 1. Payments to Bidder.

a. Within the first fifteen (15) days of each calendar month, the Owner shall make partial payment to the Bidder for construction accomplished during the preceding calendar month on the basis of completed Assembly Units furnished and certified to by the Bidder, recommended by the Engineer and approved by the Owner solely for the purposes of payment: Provided, however, that such approval shall not be deemed approval of the workmanship or materials. Only ninety percent (90%) of each such estimate approved during the construction of the Project shall be paid by the Owner to the Bidder prior to Completion of the Project: Provided, however, that at any time after work, which, in the sole determination of the Engineer, amounts to fifty percent (50%) of the Maximum Contract Price has been completed, the Owner may elect, in lieu of paying ninety percent (90%) of each such subsequent estimate, to pay each such subsequent estimate in full. Upon completion by the Bidder of the construction of the Project, the Engineer

will prepare a Final Inventory of the Project showing the total number and character of Assembly Units and, after checking such Inventory with the Bidder, will certify it to the Owner, together with a certificate of the total cost of the construction performed. Upon the approval of such certificates by the Owner and the Administrator, the Owner shall make payment to the Bidder of all amounts to which the Bidder shall be entitled thereunder which shall not have been paid: Provided, however, that such final payment shall be made not later than ninety (90) days after the date of Completion of Construction of the Project, as specified in the Certificate of Completion, unless withheld because of the fault of the Bidder.

b. The Bidder shall be paid on the basis of the number of Construction Units actually installed at the direction of the Owner shown by the inventory based on the staking sheets or structure lists; Provided, however, that the total cost shall not exceed the maximum Contract price for the construction of the Project as set forth in the Acceptance, unless such excess shall have been approved in writing by the Administrator[4].

c. Notwithstanding the provisions of Section 1a above, the Bidder may, by giving written notice thereof to the Owner, elect to receive payment in full for any Section of the Project upon:

(1) completion of construction of such Section as certified by the Engineer and approved by the Owner and the Administrator;

(2) submission to the Owner and the Administrator of the releases of lien and the certificate referred to in Section 2 hereof;

(3) approval by the Owner and the Administrator of the inventory in respect of such Section; and

(4) submission to the Owner and the Administrator of the consent in writing by the Surety or Sureties, if any, on the Contractor's Bond to payment in full for such Section prior to Completion of the Project.

If no Sections are designated in Article II, Section lc, the term ''Section'' shall mean for purposes of this subsection c and Article IV, Section 3b only, a part of the Project as designated by the Owner which represents at least twenty-five percent (25%) of the maximum Contract price as stated in Article III, Section 1, and which is capable of being energized and operated by the Owner.

d. Interest at the rate of ___ percent[5] (___%) per annum shall be paid by the Owner to the Bidder on all unpaid balances due on monthly estimates, commencing fifteen (15) days after the due date; provided the delay in payment beyond the due date is not caused by any condition within the control of the Bidder. The due date for purposes of such monthly payment shall be the fifteenth day of each calendar month provided (1) the Bidder on or before the fifth day of such month shall have submitted its certification of Construction Units completed during the preceding month and (2) the Owner on or before the fifteenth day of such month shall have approved such certification. If, for reasons not due to the Bidder's fault, such approval shall not have been given on or before the fifteenth day of such month, the due date for purposes of this subsection d shall be the fifteenth day of such month notwithstanding the absence of the approval of the certification.

e. Interest at the rate of ___ percent[6] (___%) per annum shall be paid by the Owner to the Bidder on the final payment for the Project or any completed Section thereof, commencing fifteen (15) days after the due date. The due date for purposes of such final payment shall be the date of approval by the Administrator of all of the documents requiring such approval, as a condition precedent to the making of final payment, or ninety (90) days after the date of Completion of Construction of the Project, as specified in the Certificate of Completion, whichever date is earlier.

f. No payment shall be due while the Bidder is in default in respect of any of the provisions of this Contract and the Owner may withhold from the Bidder the amount of any claim by a third party against either the Bidder or the Owner based upon an alleged failure of the Bidder to perform the work hereunder in accordance with the provisions of this Contract.

Section 2. Release of Liens and Certificate of Contractor. (See sample RUS Form 224, Waiver and Release of Lien and sample RUS Form 231, Certificate of Contractor.) Upon the completion by the Bidder of the Project (or any Section thereof if the Bidder shall elect to receive payment in full for any Section when completed as provided above) but prior to final payment to the Bidder, the Bidder shall deliver to the Owner, in duplicate, releases of all liens and of rights to claim any lien, in the form attached hereto from all manufacturers, materialmen, and subcontractors furnishing services or materials for the Project or such Section and a certificate in the form attached hereto to the effect that all labor used on or for the Project or such Section has been paid and that all such releases have been submitted to the Owner for approval.

Section 3. Payments to Materialmen and Subcontractors. The Bidder shall pay each materialman, and each subcontractor, if any,

[4] See Footnote 1.

[5] The Owner shall insert a rate equal to the lowest ''Prime Rate'' listed in the ''Money Rates'' section of the Wall Street Journal on the date such invitation to bid is issued.

[6] See Footnote 5.

within five (5) days after receipt of any payment from the Owner, the amount thereof allowed the Bidder for and on account of materials furnished or construction performed by each materialman or each subcontractor.

Article IV—Particular Undertakings of the Bidder

Section 1. Protection to Persons and Property. The Bidder shall at all times take all reasonable precautions for the safety of employees on the work and of the public, and shall comply with all applicable provisions of Federal, State, and Municipal safety laws and building and construction codes, as well as the safety rules and regulations of the Owner. All machinery and equipment and other physical hazards shall be guarded in accordance with the ''Manual of Accident Prevention in Construction'' of the Associated General Contractors of America unless such instructions are incompatible with Federal, State, or Municipal laws or regulations.

The following provisions shall not limit the generality of the above requirements.

a. The Bidder shall at no time and under no circumstances cause or permit any employee of the Bidder to perform any work upon energized lines, or upon poles carrying energized lines, unless otherwise specified in the Notice and Instructions to Bidders.

b. The Bidder shall so conduct the construction of the Project as to cause the least possible obstruction of public highways.

c. The Bidder shall provide and maintain all such guard lights and other protection for the public as may be required by applicable statutes, ordinances and regulations or by local conditions.

d. The Bidder shall do all things necessary or expedient to properly protect any and all parallel, converging and intersecting lines, joint line poles, highways and any and all property of others from damage, and in the event that any such parallel, converging and intersecting lines, joint line poles, highways or other property are damaged in the course of the construction of the Project the Bidder shall at its own expense restore any or all of such damaged property immediately to as good a state as before such damage occurred.

e. Where the right-of-way of the Project traverses cultivated lands, the Bidder shall limit the movement of its crews and equipment so as to cause as little damage as possible to crops, orchards or property and shall endeavor to avoid marring the lands. All fences which are necessarily opened or moved during the construction of the Project shall be replaced in as good condition as they were found and precautions shall be taken to prevent the escape of livestock. The Bidder shall not be responsible for loss of or damage to crops, orchards or property (other than livestock) on the right-of-way necessarily incident to the construction of the Project and not caused by negligence or inefficient operation of the Bidder. The Bidder shall be responsible for all other loss of or damage to crops, orchards, or property, whether on or off the right-of-way, and for all loss of or damage to livestock caused by the construction of the Project. The right-of-way for purposes of this said section shall consist of an area extending ____ feet on both sides of the center line of the poles along the route of the Project lines, plus such area reasonably required by the Bidder for access to the route of the Project lines from Public roads to carry on construction activities.

f. The Project, from the commencement of work to completion, or to such earlier date or dates when the Owner may take possession and control in whole or in part as hereinafter provided shall be under the charge and control of the Bidder and during such period of control by the Bidder all risks in connection with the construction of the Project and the materials to be used therein shall be borne by the Bidder. The Bidder shall make good and fully repair all injuries and damages to the Project or any portion thereof under the control of the Bidder by reason of any Act of God or other casualty or cause whether or not the same shall have occurred by reason of the Bidder's negligence.

(i) To the maximum extent permitted by law, Bidder shall defend, indemnify, and hold harmless Owner and Owner's directors, officers, and employees from all claims, causes of action, losses, liabilities, and expenses (including reasonable attorney's fees) for personal loss, injury, or death to persons (including but not limited to Bidder's employees) and loss, damage to or destruction of Owner's property or the property of any other person or entity (including but not limited to Bidder's property) in any manner arising out of or connected with the Contract, or the materials or equipment supplied or services performed by Bidder, its subcontractors and suppliers of any tier. But nothing herein shall be construed as making Bidder liable for any injury, death, loss, damage, or destruction caused by the sole negligence of Owner.

(ii) To the maximum extent permitted by law, Bidder shall defend, indemnify, and hold harmless Owner and Owner's directors, officers, and employees from all liens and claims filed or asserted against Owner, its directors, officers, and employees, or Owner's property or facilities, for services performed or materials or equipment furnished by Bidder, its subcontractors and suppliers of any tier, and from all losses, demands, and causes of action arising out of any such lien or claim. Bidder shall promptly discharge or remove any such lien or claim by bonding, payment, or otherwise and shall notify Owner promptly when it has done so. If Bidder does not cause such lien or claim to be discharged or released by payment, bonding, or otherwise, Owner shall have the right (but shall not be

obligated) to pay all sums necessary to obtain any such discharge or release and to deduct all amounts so paid from the amount due Bidder.

(iii) Bidder shall provide to Owner's satisfaction evidence of Bidder's ability to comply with the indemnification provisions of subparagraphs i and ii above, which evidence may include but may not be limited to a bond or liability insurance policy obtained for this purpose through a licensed surety or insurance company.

g. Any and all excess earth, rock, debris, underbrush and other useless material shall be removed by the Bidder from the site of the Project as rapidly as practicable as the work progresses.

h. Upon violation by the Bidder of any of the provisions of this Section, after written notice of such violation given to the Bidder by the Engineer or the Owner, the Bidder shall immediately correct such violation. Upon failure of the Bidder so to do the Owner may correct such violation at the Bidder's expense: Provided, however, that the Owner may, if it deems it necessary or advisable, correct such violation at the Bidder's expense without such prior notice to the Bidder.

i. The Bidder shall submit to the Owner monthly reports in duplicate of all accidents, giving such data as may be prescribed by the Owner.

j. The Bidder shall not proceed with the cutting of trees or clearing of right-of-way without written notification from the owner that proper authorization has been received from the owner of the property, and the Bidder shall promptly notify the Owner whenever any landowner objects to the trimming or felling of any trees or the performance of any other work on its land in connection with the Project and shall obtain the consent in writing of the Owner before proceeding in any such case.

Section 2. Insurance. The Bidder shall take out and maintain throughout the period of this Agreement the following types and minimum amounts of insurance:

a. Workers' compensation and employers' liability insurance as required by law, covering all their employees who perform any of the obligations of the contractor, engineer, and architect under the contract. If any employer or employee is not subject to the workers' compensation laws of the governing state, then insurance shall be obtained voluntarily to extend to the employer and employee coverage to the same extent as though the employer or employee were subject to the workers' compensation laws.

b. Public liability insurance covering all operations under the contract shall have limits for bodily injury or death of not less than $1 million each occurrence, limits for property damage of not less than $1 million for each occurrence, and $1 million aggregate for accidents during the policy period. A single limit of $1 million of bodily injury and property damage is acceptable. This required insurance may be in a policy or polices of insurance, primary and excess including umbrella or catastrophe form.

c. Automobile liability insurance on all motor vehicles used in connection with the contract, whether owned, nonowned, or hired, shall have limits for bodily injury or death of not less than $1 million per person and $1 million for each occurrence, and property damage limits of $1 million for each occurrence. This required insurance may be in a policy or policies of insurance, primary and excess including the umbrella or catastrophe form.

The Owner shall have the right at any time to require public liability insurance and property damage liability insurance greater than those required in subsection ''b'' and ''c'' of this Section. In any such event, the additional premium or premiums payable solely as the result of such additional insurance shall be added to the Contract price.

The Owner shall be named as Additional Insured on all policies of insurance required in subsections ''b'' and ''c'' of this Section.

The policies of insurance shall be in such form and issued by such insurer as shall be satisfactory to the Owner. The Bidder shall furnish the Owner a certificate evidencing compliance with the foregoing requirements which shall provide not less than (30) days prior written notice to the Owner of any cancellation or material change in the insurance.

Section 3. Delivery of Possession and Control to Owner.

a. Upon written request of the Owner the Bidder shall deliver to the Owner full possession and control of any portion of the Project provided the Bidder shall have been paid at least ninety percent (90%) of the cost of construction of such portion. Upon such delivery of the possession and control of any portion of the Project to the Owner, the risk and obligations of the Bidder as set forth in Article IV, Section 1f hereof with respect to such portion of the Project so delivered to the Owner shall be terminated: Provided, however, that nothing herein contained shall relieve the Bidder of any liability with respect to defective materials and workmanship as contained in Article II, Section 6 hereof.

b. Where the construction of a Section as hereinbefore defined in Article II, Section 1c and Article III, Section 1c shall have been completed by the Bidder, the Owner agrees, after receipt of a written request from the Bidder, to accept delivery of possession and control of such Section upon the issuance by the Engineer of a written statement that the Section has been inspected and found acceptable by the Engineer. Upon such delivery of

the possession and control of any such Section to the Owner, the risk and obligations of the Bidder as set forth in Article IV, Section 1f hereof with respect to such Section so delivered to the Owner shall be terminated: Provided, however, that nothing herein contained shall relieve the Bidder of any liability with respect to defective materials or workmanship as contained in Article II, Section 6 hereof.

Section 4. Energizing the Project.

a. Prior to Completion of the Project the Owner, upon written notice to the Bidder, may test the construction thereof by temporarily energizing any portion or portions thereof. During the period of such test the portion or portions of the Project so energized shall be considered as within the possession and control of the Owner and governed by the provisions of Section 3 of this Article. Upon written notice to the Bidder by the Owner of the completion of such test and upon deenergizing the lines involved therein said portion, or portions of the Project shall be considered as returned to the possession and control of the Bidder unless the Owner shall elect to continue possession and control in the manner provided in Section 3 of this Article.

b. The Owner shall have the right to energize permanently any portion or portions of the Project delivered to its possession and control pursuant to the provisions of Section 3 of this Article.

Section 5. Assignment of Guarantees. All guarantees of materials and workmanship running in favor of the Bidder shall be transferred and assigned to the Owner prior to the time the Bidder receives final payment.

Article V—Remedies

Section 1. Completion on Bidder's Default. If default shall be made by the Bidder or by any subcontractor in the performance of any of the terms of this Proposal, the Owner, without in any manner limiting its legal and equitable remedies in the circumstances, may serve upon the Bidder and the Surety or Sureties, if any, upon the Contractor's Bond or Bonds a written notice requiring the Bidder to cause such default to be corrected forthwith. Unless within twenty (20) days after the service of such notice upon the Bidder such default shall be corrected or arrangements for the correction thereof satisfactory to both the Owner and the Administrator shall be made by the Bidder or its Surety or Sureties, if any, the Owner may take over the construction of the Project and prosecute the same to completion by Contract or otherwise for the account and at the expense of the Bidder, and the Bidder and its Surety or Sureties, if any, shall be liable to the Owner for any cost or expense in excess of the Contract price occasioned thereby. In such event the Owner may take possession of and utilize, in completing the construction of the Project, any materials, tools, supplies, equipment, appliances, and plant belonging to the Bidder or any of its subcontractors, which may be situated at the site of the Project. The Owner in such contingency may exercise any rights, claims or demands which the Bidder may have against third persons in connection with this Contract and for such purpose the Bidder does hereby assign, transfer and set over unto the Owner all such rights, claims and demands.

Section 2. Liquidated Damages. The time of the Completion of Construction of the Project is of the essence of the Contract. Should the Bidder neglect, refuse or fail to complete the construction within the time herein agreed upon, after giving effect to extensions of time, if any, herein provided, then, in that event and in view of the difficulty of estimating with exactness damages caused by such delay, the Owner shall have the right to deduct from and retain out of such moneys which may be then due, or which may become due and payable to the Bidder the sum of ___ dollars (___) per day for each and every day that such construction is delayed in its completion beyond the specified time, as liquidated damages and not as a penalty; if the amount due and to become due from the Owner to the Bidder is insufficient to pay in full any such liquidated damages, the Bidder shall pay to the Owner the amount necessary to effect such payment in full; Provided, however, that the Owner shall promptly notify the Bidder in writing of the manner in which the amount retained, deducted or claimed as liquidated damages was computed.

Section 3. Cumulative Remedies. Every right or remedy herein conferred upon or reserved to the Owner or the Government or the Administrator shall be cumulative, shall be in addition to every right and remedy now or hereafter existing at law or in equity or by statute and the pursuit of any right or remedy shall not be construed as an election: Provided, however, that the provisions of Section 2 of this Article shall be the exclusive measure of damages for failure by the Bidder to complete the construction of the Project within the time herein agreed upon.

Article VI—Miscellaneous

Section 1. Definitions.

a. The term ''Administrator'' shall mean the Administrator of the Rural Utilities Service of the United States of America and his duly authorized representatives or any other person in whom or authority in which may be vested the duties and functions which the Administrator is now authorized by law to perform.

b. The term ''Engineer'' shall mean the engineer employed by the Owner, with the approval of the Administrator, to provide engineering services for the Project and said Engineer's duly authorized assistants and representatives.

c. The term ''Supervisor'' shall mean the person, if any, appointed by the Administrator as the representative of the Government under the provisions of the Loan Contract providing for such appointment in special cases. The term is limited to such special representative of the Government, if any, who is responsible exclusively to the Administrator and does not refer to the Manager or any other person employed by the Owner and responsible to it.

d. The term ''Project'' shall mean the rural electric system, or portion thereof, described in the Plans and Specifications, Construction Drawings and maps attached hereto.

e. The term ''Completion of Construction'' shall mean full performance by the Bidder of the Bidder's obligations under the Contract and all amendments and revisions thereof except the Bidder's obligations in respect of (1) Releases of Liens and Certificate of Contractor under Article III, Section 2 hereof, (2) the inventory referred to in Article III, Section 1 hereof, and (3) other final documents. The term ''Completion of the Project'' shall mean full performance by the Bidder of the Bidder's obligations under the Contract and all amendments and revisions thereof. The Certificate of Completion, signed by the Engineer and approved in writing by the Owner and the Administrator, shall be the sole and conclusive evidence as to the date of Completion of Construction and as to the fact of Completion of the Project.

Section 2. Materials and Supplies. In the performance of this contract there shall be furnished only such unmanufactured articles, materials, and supplies as have been mined or produced in the United States, Mexico, or Canada, and only such manufactured articles, materials, and supplies as have been manufactured in the United States substantially all from articles, materials, or supplies mined, produced or manufactured, as the case may be, in the United States, Mexico, or Canada; provided that other articles, materials, or supplies may be used in the event and to the extent that the Administrator shall expressly in writing authorize such use pursuant to the provisions of the Rural Electrification Act of 1938, being Title IV of Public Resolution No. 122, 75th Congress, approved June 21, 1938. The Seller agrees to submit to the Purchaser such certificates with respect to compliance with the foregoing provision as the Administrator from time to time may require.

Section 3. Patent Infringement. The Bidder shall save harmless and indemnify the Owner from any and all claims, suits and proceedings for the infringement of any patent or patents covering any materials or equipment used in construction of the Project.

Section 4. Permits for Explosives. All permits necessary for the handling or use of dynamite or other explosives in connection with the construction of the Project shall be obtained by and at the expense of the Bidder.

Section 5. Compliance with Statutes and Regulations. The Bidder shall comply with all applicable statutes, ordinances, rules and regulations pertaining to the work. The Bidder acknowledges that it is familiar with the Rural Electrification Act of 1936, as amended, the so-called ''Kick-Back'' Statute thereto, and 18 U.S.C. §§ 287, 1001, as amended. The Bidder understands that the obligations of the parties hereunder are subject to the applicable regulations and orders of Governmental Agencies having jurisdiction in the premises.

Section 6. Equal Opportunity Provisions.

a. Bidder's Representations.

The Bidder represents that:

It has ____, does not have ____, 100 or more employees, and if it has, that it has ____, has not ____, furnished the Equal Employment Opportunity-Employers Information Report EEO–1, Standard Form 100, required of employers with 100 or more employees pursuant to Executive Order 11246 and Title VII of the Civil Rights Act of 1964.

The Bidder agrees that it will obtain, prior to the award of any subcontract for more than $10,000 hereunder to a subcontractor with 100 or more employees, a statement, signed by the proposed subcontractor, that the proposed subcontractor has filed a current report on Standard Form 100.

The Bidder agrees that if it has 100 or more employees and has not submitted a report on Standard Form 100 for the current reporting year and that if this Contract will amount to more than $10,000, the Bidder will file such report, as required by law, and notify the owner in writing of such filing prior to the Owner's acceptance of this Proposal.

b. Equal Opportunity Clause. During the performance of this Contract, the Bidder agrees as follows:

(1) The Bidder will not discriminate against any employee or applicant for employment because of race, color, religion, sex or national origin. The Bidder will take affirmative action to ensure that applicants are employed, and that employees are treated during employment without regard to their race, color, religion, sex or national origin. Such action shall include, but not be limited to, the following: Employment, upgrading, demotions or transfer; recruitment or recruitment advertising; layoff or termination; rates of pay or other forms of compensation; and selection of training, including apprenticeship. The Bidder agrees to post in conspicuous places, available to employees and applicants for employment, notices

to be provided setting forth the provisions of this Equal Opportunity Clause.

(2) The Bidder will, in all solicitations or advertisements for employees placed by or on behalf of the Bidder, state that all qualified applicants will receive consideration for employment without regard to race, color, religion, sex or national origin.

(3) The Bidder will send to each labor union or representative of workers, with which it has a collective bargaining agreement or other contract or understanding, a notice to be provided advising the said labor union or workers' representative of the Bidder's commitments under this section, and shall post copies of the notice in conspicuous places available to employees and applicants for employment.

(4) The Bidder will comply with all provisions of Executive Order 11246 of September 24, 1965, and the rules, regulations and relevant orders of the Secretary of Labor.

(5) The Bidder will furnish all information and reports required by Executive Order 11246 of September 24, 1965, and by rules, regulations, and orders of the Secretary of Labor, or pursuant thereto, and will permit access to its books, records, and accounts by the administering agency and the Secretary of Labor for purposes of investigation to ascertain compliance with such rules, regulations, and orders.

(6) In the event of the Bidder's noncompliance with the Equal Opportunity Clause of this Contract or with any of the said rules, regulations, or orders, this Contract may be canceled, terminated, or suspended in whole or in part, and the Bidder may be declared ineligible for further Government contracts or federally assisted construction contracts in accordance with procedures authorized in Executive Order 11246 of September 24, 1965, and such other sanctions may be imposed and remedies invoked as provided in Executive Order 11246 of September 24, 1965, or by rule, regulation, or order of the Secretary of Labor, or as provided by law.

(7) The Bidder will include this Equal Opportunity Clause in every subcontract or purchase order unless exempted by the rules, regulations, or order of the Secretary of Labor issued pursuant to Section 204 of Executive Order 11246 of September 24, 1965, so that such provisions will be binding upon each subcontractor or vendor. The Bidder will take such action with respect to any subcontract or purchase order as the administering agency may direct as a means of enforcing such provisions, including sanctions for noncompliance; Provided, however, that in the event Bidder becomes involved in, or is threatened with, litigation with a subcontractor or vendor as a result of such direction by the administering agency, the Bidder may request the United States to enter into such litigation to protect the interests of the United States.

c. Certificate of Nonsegregated Facilities. The Bidder certifies that it does not maintain or provide for its employees any segregated facilities at any of its establishments, and that it does not permit its employees to perform their services at any location, under its control, where segregated facilities are maintained. The Bidder certifies further that it will not maintain or provide for its employees any segregated facilities at any of its establishments, and that it will not permit its employees to perform their services at any location, under its control, where segregated facilities are maintained. The Bidder agrees that a breach of this certification is a violation of the Equal Opportunity Clause in this Contract. As used in this certification, the term ''segregated facilities'' means any waiting rooms, work areas, restrooms and washrooms, restaurants and other eating areas, timeclocks, locker rooms and other storage or dressing areas, parking lots, drinking fountains, recreation or entertainment areas, transportation, and housing facilities provided for employees which are segregated by explicit directive or are in fact segregated on the basis of race, color, religion, or national origin, because of habit, local custom, or otherwise. The Bidder agrees that (except where it has obtained identical certifications from proposed subcontractors for specific time periods) it will obtain identical certifications from proposed subcontractors prior to the award of subcontracts exceeding $10,000 which are not exempt from the provisions of the Equal Opportunity Clause, and that it will retain such certifications in its files.

Section 7. Franchises and Rights-of-Way. The Bidder shall be under no obligation to obtain or assist in obtaining: Any franchises, authorizations, permits or approvals required to be obtained by the Owner from Federal, State, County, Municipal or other authorities; any rights-of-way over private lands; or any agreements between the Owner and third parties with respect to the joint use of poles, crossings, or other matter incident to the construction and operation of the Project.

Section 8. Nonassignment of Contract. The Bidder shall perform directly and without subcontracting not less than twenty-five per centum (25%) of the construction of the Project, to be calculated on the basis of the total Contract price. The Bidder shall not assign the Contract effected by an acceptance of this Proposal or any interest in any funds that may be due or become due hereunder or enter into any contract with any person, firm or corporation for the performance of the Bidder's obligations hereunder or any part thereof, without the approval in writing of the Owner and of the Surety or Sureties, if any, on any bond furnished by the Bidder for the faithful performance of the Bidder's obligations hereunder. If the Bidder, with

the consent of the Owner and any Surety or Sureties on the Contractor's Bond or Bonds, shall enter into a subcontract with any subcontractor for the performance of any part of this Contract, the Bidder shall be as fully responsible to the Owner and the Government for the acts and omissions of such subcontractor and of persons employed by such subcontractor as the Bidder would be for its own acts and omissions and those of persons directly employed by it.

Section 9. Extension to Successors and Assigns. Each and all of the covenants and agreements herein contained shall extend to and be binding upon the successors and assigns of the parties hereto.

Section 10. Contractor. Upon acceptance of this Proposal, the successful Bidder shall be the Contractor and all references in the Proposal to the Bidder shall apply to the Contractor.

Section 11. Approval by the Administrator. No acceptance of this Proposal shall become effective until approval in writing of the Administrator: Provided, however, that no obligations shall arise hereunder unless such approval is given within forty-five (45) days from the date of acceptance by the Owner.

_____ (Bidder)
By _____ (President)
_____ (Address)
Attest: _____ (Secretary)
Date _____

The Proposal must be signed with the full name of the Bidder. If the Bidder is a partnership, the Proposal must be signed in the partnership name by a partner. If the Bidder is a corporation, the Proposal must be signed in the corporate name by a duly authorized officer and the corporate seal affixed and attested by the Secretary of the Corporation.

Transmission Construction Units

Section 1—Pole Units

A pole unit consists of one pole in place. It does not include pole-top assembly unit or other parts attached to the pole. The first two digits indicate the length of the pole; the third digit shows the classification per A.S.A. (Example: 45–3 means a pole 45 feet long, class 3.)

Species of Timber: _____
Kind of Preservative: (Check one)
1. Creosote ____; 2. Pentachlorophenol ____; 3. Copper Naphthenate ____; 4. Waterborne preservative—CCA ____ ACZA ____
Method of Treatment: (Check one)
1. Pressure ____; 2. Thermal process: ____
Pole Plan Under Which the Poles are to be Furnished: (Check one)
1. Insured Warranted ____; 2. Independently Inspected ____; 3. Quality Assured ____; 4. Either Insured Warranted, Independently Inspected, or Quality Assured ____
(Engineer to complete above)

Unit No.	No. of units	Unit Price			Extended price—labor & materials
		Labor	Materials	Labor & materials	

Total, Section 1— _____

Section 2—Pole-Top Assembly Units

A pole-top assembly unit consists of the hardware, crossarms and their appurtenances, insulators, etc., except tie wire, required to support the power conductors and overhead ground wire. It does not include the pole, the downlead, and butt coil, which are separate units.

Unit No.	No. of units	Unit Price			Extended price—labor & materials
		Labor	Materials	Labor & materials	
TH TP TS TSS TSZ TUS–1 TUS–2					

Total, Section 2— _____

Section 3—Conductor Assembly Units

A conductor assembly unit consists of 1,000 feet of a single conductor or overhead ground wire, and includes tie wire, sleeves for splicing, and armor rods with clips or armor wire where necessary. The length of conductor or overhead ground wire shall be determined by taking the sum of all straight horizontal

span distances between pole stakes or from center to center of the poles carrying the conductors. The conductor sizes and types listed are the manufacturer's designation.

___ Tension Stringing (Engineer check when required.)

Unit No.	No. of units	Unit Price			Extended price—labor & materials
		Labor	Materials	Labor & materials	

Total, Section 3— _____

As provided for in the specifications, prior to beginning of work the Bidder will furnish the Engineer the following data on tension equipment:

Diameter Bull Wheel _____ in.
Diameter Groove _____ in.
Conductor Bending Radius _____ in.
Thickness of Neoprene at Bottom of Groove _____ in.
Stringing Sheave Diameter; Tangent _____ in., Large Angle _____ in.

Section 4—Guy Assembly Units

A guy assembly unit consists of the hardware and wire. Guy guards are designated separately.

Unit No.	No. of units	Unit Price			Extended price—labor & materials
		Labor	Materials	Labor & materials	
TG–1 TG–2 TG–3 TG–4 TG–5					

Total, Section 4— _____

Section 5—Anchor Assembly Units

An anchor assembly unit consists of the anchor with rod or rods, complete, ready for attaching the guy wire.

Unit No.	No. of units	Unit Price			Extended price—labor & materials
		Labor	Materials	Labor & materials	
TA–1–5 TA–1–8 TA–3					

Total, Section 5— _____

Section 6—Miscellaneous Assembly Units

A miscellaneous assembly unit consists of an additional unit needed in the Project for line construction but not otherwise listed in the Proposal.

Unit No.	No. of units	Unit Price			Extended price—labor & materials
		Labor	Materials	Labor & materials	
TM					

Total, Section 6— _____

Section 7—Right-of-Way Clearing Units

TM–12. The unit is 1,000 feet in length and _____ (_____) feet in width (to be measured _____ (_____) feet on one side of

pole line or centerline of structures) of actual clearing of right-of-way. This includes clearing of underbrush, tree removal, and such tree trimming as is required so that the right-of-way, except for tree stumps which shall not exceed _____ in height, shall be clear from the ground up on one side of the line of poles carrying conductors (See Detail A, Drawing TM–12–2A.) The length of actual clearing shall be measured in a straight line, parallel to the horizontal line between poles or centerline of structures and across the maximum dimension of foliage cleared projected to the ground line (See Detail B, Drawing TM–12–2A.) All trees and underbrush across the width of the right-of-way shall be considered to be grouped together as a single length in measuring the total length of clearing (See Detail C, Drawing TM–12–2A.) Spaces along the right-of-way in which no trees are to be removed or trimmed or underbrush cleared shall be omitted from the total measurement. All lengths thus arrived at, added together and divided by 1,000 shall give the number of TM–12 units of clearing. The Bidder shall not remove or trim shade, fruit, or ornamental trees unless so directed by the Engineer in writing.

TM–12 (1). This unit is identical with TM–12, except the full width of the right-of-way to be cleared shall be _____ (_____) feet wide (to be measured _____ (_____) feet on each side of the pole line or centerline of structures) (See Detail D, Drawing TM–12–2A.)

TM–13. The unit, for purpose of quoting, is 1,000 feet in length of clearing off the right-of-way. The Engineer will select those trees off the right-of-way that he deems to be a hazard to the line and will designate them to the Bidder in writing as danger trees. When so designated, the Bidder shall remove or top such trees at his option except that the Bidder shall trim and not remove shade, fruit or ornamental trees unless otherwise directed by the Engineer in writing (See Drawings TM–12–2A and TM–13 for examples of danger trees.)

The measurement of length of right-of-way to be cleared shall be considered as a straight line parallel to the horizontal line between poles or centerline of structures, such measurement of length to be based on maximum dimension of foliage (not trunk) projected to the ground line (See Details E, F, G and H, Drawing TM–12–2A.) Dead trees having no foliage shall be measured across the maximum dimension and multiplied by two. (See Detail F, Drawing TM–12–2A.) Each tree so removed shall be added together to determine the total length of clearing. All lengths thus arrived at, added together and divided by 1,000 shall give the number of TM–13 units (Example: Details E, F, G and H, Drawing TM–12–2A, total 0.10 of a TM–13 unit.)

TMC–12, TMC–12 (1). These units are identical to the respective TM units except that chemical treatment of stumps is required in addition to the clearing of underbrush, tree removal and tree trimming. TM–14. The unit is 1,000 feet in length and _____ (_____) feet in width (to be measured feet on one side of right-of-way center line) of actual clearing of right-of-way. Trees and underbrush should be cleared from the ground up within 10 feet of any structure location. The Engineer will mark the trees and brush to be cleared to provide ''undulating'' boundaries. Low growing trees and brush are to be left in the right-of-way to the extent it will not be hazardous to the line or will not interfere with the service road. The length of actual clearing shall be measured in a straight line parallel to the horizontal line between poles or center line of structures and across the maximum dimension of foliage cleared projected to the ground line (See Detail B, Drawing TM–12–2A.) All trees and underbrush cleared across the right-of-way shall be considered to be grouped together as a single length in measuring the total length of clearing (See Detail C, Drawing TM–12–2A.) Spaces along the right-of-way in which no trees are to be removed or trimmed or underbrush cleared shall be omitted from the total measurement.

TM–14 (1). This unit is identical with TM–14 except the full width of the right-of-way to be cleared shall be _____ (_____) feet wide (See Detail D, Drawing TM–12–2A.)

TM–15. The unit is 1,000 feet in length and _____ feet in width (to be measured _____ (_____) feet on one side of the right-of-way center line) of actual clearing of the right-of-way. Trees and underbrush should be cleared from ground up within 10 feet of any structure location. The Engineer will mark the trees and brush to be cleared to provide a ''feathered'' appearance in the right-of-way. Low growing trees and brush are to be left in the right-of-way to the extent it will not be hazardous to the line or will not interfere with the service road.

The length of actual clearing shall be measured in a straight line parallel to the horizontal line between poles or center line of structures and across the maximum dimension of foliage cleared projected to ground line (See Detail B, Drawing TM–12–2A). All trees and underbrush cleared across the right-of-way shall be considered to be grouped together as a single length in measuring the total length of clearing (See Detail C, Drawing TM–12–2A). Spaces along the right-of-way in which no trees are to be removed or trimmed or underbrush cleared shall be omitted from the total measurement.

TM–15 (1). This unit is identical to TM–15 except the full width of the right-of-way, to be cleared shall be _____ (_____) feet wide (See Detail D, Drawing TM–12–2A).

Additional Requirements. (When specifying TM units denote type of disposal A or B).

A. Trees, brush, branches and refuse shall, without delay, be disposed of by such of the following methods as the Engineer will direct Engineer to strike out methods not to be used)

1. Burned
2. Piled on one side of right-of-way
3. Roller chopped and left on right-of-way in such a manner as not to obstruct roads, ditches, drains, etc.
4. Other (Describe)_____

B. Trees that are felled shall be cut to commercial wood lengths, stacked neatly, and left on the right-of-way for the landowner. Commercial wood length means the length designated by the Engineer but in no case shall it be required to be less than _____ (_____) feet. Brush, branches and refuse shall, without delay, be disposed of by such of the following methods as the Engineer will direct (Engineer to strike out methods not to be used).

1. Burned
2. Piled on one side of right-of-way
3. Roller chopped and left on right-of-way in such a manner as not to obstruct roads, ditches, drains, etc.
4. Other (Describe)_____

Transmission Right-of-Way Unit

Unit No.	No. of units	Unit Price			Extended price—labor & materials
		Labor	Materials	Labor & materials	

Total Section 7—_____

Section 8—Substation Assembly Units

Description of Construction Units. Each Construction Unit consists of a complete installation of the designated portion of a substation as specified on the drawings, together with connections to associated equipment. Each Construction Unit represents all labor and material including necessary accessories completely installed and tested in satisfactory operation. Full identification of each Construction Unit and all necessary specifications of the installation is shown on the drawings.

Items of material in each Construction Unit shall be of the designated size, rating, type, voltage, or other specification in accordance with the drawings. The bill of material drawing for each substation shows the identification of the Construction Units under which the material is to be installed and shows which items of material may be partly or entirely found in the lists of owner-furnished materials. All items of equipment, unless otherwise specified, are mounted on a structure which shall be a Construction Unit of Group A.

Each Construction Unit is designated by the letter of the Group to which it belongs and an identifying number. The same item of equipment carries the same Construction Unit designation in all the substations. Items of equipment designated by the same Construction Unit in one substation are of only one kind as to voltage, type and other specifications. The tabulation of construction units for each substation is separate and contains all units necessary for construction of that substation.

Group A. Structures. A Construction Unit consists of a structure, or structures, with bus supports including insulators and fittings, buses, conductors and overhead ground wires to adjacent structures within the substation, grounding material to connect equipment with the ground bus, and associated material including mounting brackets, supports for equipment, clamps and connectors, all as specified in the drawings.

Group B. Three-Pole Group Operated Air Break Switches. A Construction Unit consists of one 3-pole group operated air break switch with all accessories and operating mechanisms as specified in the drawings.

Group C. Lightning Arresters. A Construction Unit consists of one single-phase lightning arrester.

Group D. Single Pole Disconnecting Switches. A Construction Unit consists of one single pole disconnecting or by-pass switch as specified in the drawings. If a fuse disconnect switch is specified, the fuse is included with the switch.

Group E. Oil Circuit Breakers. A Construction Unit consists of one complete three-phase power circuit breaker complete with supporting frame and control cabinet, unless shown otherwise in the drawings, mounted as specified in the drawings.

Group F. Oil Circuit Reclosers. A Construction Unit consists of a complete single-phase or three-phase oil circuit recloser as specified in the drawings.

Group G. Meters, Relays and Instrument Transformers. A Construction Unit consists of one meter, relay, potential transformer or current transformer.

Group H. Transformers. A Construction Unit consists of one power transformer or

one station service transformer either single-phase or three-phase as specified in the drawings.

Group I. Voltage Regulators. A Construction Unit consists of one single-phase or three-phase voltage regulator as specified in the drawings.

Group J. Communications and Supervisory Control Equipment. A Construction Unit consists of carrier current equipment, microwave, or other types of communications and supervisory control equipment as specified in the drawings.

Group K. Conduit and Cable. A Construction Unit consists of the wire, cable, conduit and accessories necessary to complete the installation of equipment in accordance with the specifications and drawings, where such installation has not been included in other Groups.

Group L. Foundations. A Construction Unit consists of concrete footings and foundations except for the fence, as specified in the drawings.

Group M. Site Preparation. A Construction Unit consists of clearing, grading, drainage work, and surfacing, as specified in the drawings.

Group N. Fence. A Construction Unit consists of the complete installation of the fence, gates, etc., as specified in the drawings.

Group O. Station Grounding. A Construction Unit consists of the complete ground bus including ground rods, grounding mats or platforms, except as otherwise provided in other Groups, with connections to structures, equipment, and fence as specified in the drawings.

Group P. Building. A Construction Unit consists of a control building or cabinet, on a foundation of Group L and the facilities and equipment installed therein as specified in the drawings, except as otherwise provided in other Groups.

Other Groups. The Engineer shall specify such additional Groups as may be necessary for the completion of the Project. Description of these Groups shall be provided by an addition to this Section of the Specifications for Construction.

_____ Station Construction Units
Unit No. _____
Name and Description of Construction Unit _____
No. of Units _____
Unit Prices _____
Labor _____
Materials _____
Labor and Materials _____
Extended Price—Labor and Materials _____
Total Price _____

Proposal Summary

Recapitulation of Sections:

Section—1 _____ $ _____
Section—2 _____ $ _____
Section—3 _____ $ _____
Section—4 _____ $ _____
Section—5 _____ $ _____
Section—6 _____ $ _____
Section—7 _____ $ _____
Section—8 _____ $ _____
Total _____ $ _____

Acceptance

Subject to the approval of the Administrator, the Owner hereby accepts the foregoing Proposal of the Bidder, _____ for the construction of the following:

Transmission Construction Units: Sections: _____

The total contract price is $ _____
_____ Owner
By _____ President
_____ Secretary
_____ Date of Contract

[End of clause]

§§ 1726.353—1726.399 [Reserved]

Subpart J—Contract Closeout

§ 1726.400 Final contract amendment.

As needed, a final contract amendment will be prepared and processed in accordance with § 1726.24(b) prior to or in conjunction with the closeout of the contract.

§ 1726.401 Material contract closeout.

This section is applicable to contracts executed on RUS Form 173.

(a) *Delivery inspection.* The borrower (acting through its engineer, if applicable) will verify that all materials are delivered in proper quantities, in good condition, and in compliance with applicable specifications.

(b) *Closeout documents.* The borrower (acting through its engineer, if applicable) will obtain from the supplier a ''Buy American'' certificate, RUS Form 213, any manufacturer's guarantee(s) and, if applicable, a copy of RUS Form 224, Waiver and Release of Lien. Closeout documents for materials contracts need not be submitted to RUS unless specifically requested by RUS on a case by case basis.

(c) *Final payment.* Upon completion of the actions required under paragraphs (a) and (b) of this section, the borrower shall make final payment to the supplier in accordance with the provisions

of the material contract or written purchase order.

§1726.402 Equipment contract closeout.

This section is applicable to contracts executed on RUS Form 198.

(a) *Final inspection and testing of equipment.* The borrower (acting through its engineer, if applicable) will perform the final inspection and testing of equipment as appropriate for the specific equipment. The borrower (acting through its engineer, if applicable) will schedule such inspection and testing at a time mutually agreeable to the borrower, engineer, and the supplier or manufacturer. Within thirty (30) days after completion of the inspection and testing, the borrower (acting through its engineer, if applicable) will prepare a report of the inspection and testing, obtain a copy of the report from the engineer, and submit a copy to the supplier or manufacturer. This report must include a detailed description of the methods of conducting the test(s), observed data, comparison of guaranteed and actual performance, and recommendations concerning acceptance. The borrower will obtain from the engineer a written certification stating that the equipment has been installed, placed in satisfactory operation and tested, and meets the contract requirements. Where more than one-hundred and eighty (180) days have elapsed since the delivery of the equipment and the equipment has not been installed or tested, the contract may be closed out upon certification by the engineer that the equipment has been inspected and appears to be in accordance with the contract requirements.

(b) *Closeout documents.* (1) The borrower (acting through its engineer, if applicable) will obtain the following executed documents:

(i) Certification by the project engineer in accordance with paragraph (a) of this section.

(ii) All guarantees or warranties.

(iii) A ''Buy American'' certificate, RUS Form 213, from the supplier or manufacturer.

(2) Closeout documents for materials contracts need not be submitted to RUS unless specifically requested by RUS.

(c) *Final payment.* Upon completion of the actions required under paragraphs (a) and (b) of this section, the borrower will make final payment to the supplier or manufacturer in accordance with the provisions of the equipment contract.

§1726.403 Project construction contract closeout.

This section is applicable to contracts executed on RUS Forms 200, 203, 257, 764, 786, 830, and 831.

(a) *Final test of equipment supplied under a construction contract.* If equipment is supplied under a construction contract, the borrower (acting through its architect or engineer, if applicable) will perform the final inspection and testing of equipment as appropriate for the specific equipment. The borrower (acting through its architect or engineer, if applicable) will schedule such inspection and testing at a time mutually agreeable to the borrower, architect or engineer, and the contractor. Within thirty (30) days after completion of the inspection and testing, the borrower (acting through its architect or engineer, if applicable) will prepare a report of the inspection and testing, obtain a copy of the report from its architect or engineer, and submit a copy to the contractor. This report must include a detailed description of the methods of conducting the test(s), observed data, comparison of guaranteed and actual performance, and recommendations concerning acceptance. The borrower will obtain from its architect or engineer a written certification stating that the equipment has been installed, placed in satisfactory operation and tested, and meets the contract requirements. Where more than one-hundred and eighty (180) days have elapsed since the delivery of the equipment and the equipment has not been installed or tested, the contract may be closed out upon certification by its architect or engineer that the equipment has been inspected and appears to be in accordance with the contract requirements.

(b) *Final inspection of construction.* The borrower will require the contractor to notify the architect or engineer when construction is complete. The borrower (acting through the architect

or engineer, if applicable) will schedule such final inspection at a time mutually agreeable to the borrower, architect or engineer, contractor, and the respective RUS General Field Representative (GFR), if the GFR has notified the borrower or its architect or engineer of a desire to observe the final inspection. The borrower (acting through its architect or engineer, if applicable) will perform a final inspection of the construction and notify the contractor of any required changes or corrections.

(c) *Closeout documents.* (1) Upon satisfactory completion of construction (including all changes and corrections by the contractor), the borrower (acting through its architect or engineer, if applicable) will obtain executed copies of the following documents:

(i) RUS Form 181, Certificate of Completion, Contract Construction for Buildings (for contracts executed on RUS Form 257), or RUS Form 187, Certificate of Completion, Contract Construction (for contracts executed on all other forms under this section).

(ii) RUS Form 213, ''Buy American'' certificate.

(iii) RUS Form 224, Waiver and Release of Lien, from each manufacturer, supplier, and contractor which has furnished material or services or both in connection with the construction.

(iv) RUS Form 231, Certificate of Contractor.

(v) RUS Form 254, Construction Inventory, including all supporting documents, such as RUS Forms 254a-c, construction change orders, and amendments for contracts executed on RUS Forms 203, 764, 830 or 831.

(vi) Certification by the project architect or engineer in accordance with § 1726.403(a), if applicable.

(vii) Final design documents, as outlined in part 1724 of this chapter.

(2) *Distribution of closeout documents.* (i) The borrower will retain one copy of each of the documents identified in paragraph (c)(1) of this section in accordance with applicable RUS requirements regarding retention of records.

(ii) For contracts subject to RUS approval, the borrower will submit the following closeout documents for RUS approval (through the GFR except for generation projects):

(A) RUS Form 181, Certificate of Completion, Contract Construction for Buildings (for contracts executed on RUS Form 257), or RUS Form 187, Certificate of Completion, Contract Construction (for contracts executed on all other forms under this section).

(B) RUS Form 231, Certificate of Contractor.

(C) RUS Form 254, Construction Inventory, including all supporting documents, such as RUS Forms 254a-c and construction change orders, for contracts executed on RUS Forms 203, 764, or 831.

(iii) For contracts not subject to RUS approval, the closeout is not subject to RUS approval. The borrower will send one copy of RUS Form 181 or RUS Form 187 (as applicable) to RUS for information prior to or in conjunction with the applicable RUS Form 219, Inventory of Work Orders. The remaining closeout documents need not be sent to RUS unless specifically requested by RUS.

(d) *Final payment.* (1) The borrower will make final payment to the contractor upon completion of approval of all closeout documents by the parties to the contract, in accordance with the terms of the construction contract.

(2)(i) Upon receipt of final payment by the contractor, the borrower will obtain from the contractor a certification of receipt of final payment in the following form:

> ''The undersigned acknowledges receipt of the final contract payment of $____ as satisfaction in full of all claims of the undersigned under the construction contract between the undersigned and ____ (borrower), dated as amended, and as complete performance by the latter of all obligations to be performed by it pursuant thereto. The total amount received under this contract is shown above.''

(ii) The certification in paragraph (d)(2)(i) of this section is to be executed for the contractor by: the sole owner, a partner, or an officer of the corporation. Where this certification is executed for the corporation by a person other than the president, a certified copy of the authorization from the corporate board must be included with the certification. This certification is not a replacement for itemized invoices.

§ 1726.404 Non-site specific construction contract closeout.

This section is applicable to contracts executed on RUS Forms 201, 790, and 792.

(a) *Final test of equipment supplied under a construction contract.* If equipment is supplied under a construction contract, the borrower (acting through its engineer, if applicable) will perform the final inspection and testing of equipment as appropriate for the specific equipment. The borrower (acting through its engineer, if applicable) will schedule such inspection and testing at a time mutually agreeable to the borrower, its engineer, and the contractor. Within thirty (30) days after completion of the inspection and testing, the borrower (acting through its engineer, if applicable) will prepare a report of the inspection and testing, obtain a copy of the report from its engineer, and submit a copy to the contractor. This report must include a detailed description of the methods of conducting the test(s), observed data, comparison of guaranteed and actual performance, and recommendations concerning acceptance. The borrower will obtain from the engineer a written certification stating that the equipment has been installed, placed in satisfactory operation and tested, and meets the contract requirements. Where more than one-hundred and eighty (180) days have elapsed since the delivery of the equipment and the equipment has not been installed or tested, the contract may be closed out upon certification by the engineer that the equipment has been inspected and appears to be in accordance with the contract requirements.

(b) *Final inspection of construction.* The borrower will require the contractor to notify its engineer when construction of a section of the project is complete. The borrower (acting through its engineer, if applicable) will schedule such final inspection at a time mutually agreeable to the borrower, its engineer, contractor, and the respective GFR, if the GFR has notified the borrower or its engineer of a desire to observe the final inspection. The borrower (acting through its engineer, if applicable) will perform a final inspection of the construction of that section of the project and notify the contractor of any required changes or corrections.

(c) *Closeout documents.* (1) Upon satisfactory completion of construction of a section of the project (including all changes and corrections by the contractor), the borrower (acting through its engineer, if applicable) will obtain executed copies of the following documents:

(i) RUS Form 792b, Certificate of Contractor and Indemnity Agreement

(ii) RUS Form 213, ''Buy American'' certificate.

(iii) Certification by the project engineer in accordance with paragraph (a) of this section, if applicable.

(iv) Final design documents, as outlined in part 1724 of this chapter.

(2) *Distribution of closeout documents.* (i) The borrower will retain one copy of each of the documents identified in paragraph (c)(1) of this section in accordance with applicable RUS requirements regarding retention of records.

(ii) For contracts not subject to RUS approval, the closeout is not subject to RUS approval and the closeout documents need not be sent to RUS unless specifically requested by RUS.

§ 1726.405 Inventory of work orders (RUS Form 219).

Upon completion of the contract closeout, the borrower shall complete RUS Form 219, Inventory of Work Orders, in accordance with part 1717, Post-Loan Policies and Procedures Common to Insured and Guaranteed Electric Loans, of this chapter.

PART 1728—ELECTRIC STANDARDS AND SPECIFICATIONS FOR MATERIALS AND CONSTRUCTION

Sec.

1728.10 General purpose and scope.
1728.20 Establishment of standards and specifications.
1728.30 Inclusion of an item for listing or technical acceptance.
1728.40 Procedure for submission of a proposal.
1728.50 Removal of an item from listing or technical acceptance.
1728.60 List of materials and equipment.
1728.70 Procurement of materials.
1728.97 Incorporation by reference of electric standards and specifications.

1728.201 RUS Bulletin 1728H-701, RUS Specification for Wood Crossarms (Solid and Laminated), Transmission Timbers and Pole Keys.
1728.202 RUS Bulletin 1728H-702, RUS Specification for Quality Control and Inspection of Timber Products.

AUTHORITY: 7 U.S.C. 901 *et seq.*; 7 U.S.C. 1921 *et seq.*; Pub. L. 103–354, 108 Stat. 3178 (7 U.S.C. 6941 *et seq.*).

EDITORIAL NOTE: Nomenclature changes to part 1728 appear at 55 FR 39397, Sept. 27, 1990.

§ 1728.10 General purpose and scope.

(a) The requirements of this part are based on contractual provisions between RUS and the organizations which receive financial assistance from RUS.

(b) RUS will establish certain specifications and standards for materials, equipment, and construction units that will be acceptable for RUS financial assistance for the electric program. Materials and equipment purchased by the electric borrowers or accepted as contractor-furnished material must conform to RUS standards and specifications where they have been established and, if included in RUS Bulletin 43–5, ''List of Materials Acceptable for Use on Systems of RUS Electrification Borrowers'' (List of Materials), must be selected from that list or must have received technical acceptance from RUS. RUS, through its Technical Standards Committees, will evaluate certain materials, equipment and construction units, and will determine acceptance.

[50 FR 47710, Nov. 20, 1985. Redesignated at 55 FR 39395, Sept. 27, 1990]

§ 1728.20 Establishment of standards and specifications.

(a) *National and other standards.* RUS will utilize standards of national standardizing groups, such as the American National Standards Institute (ANSI), American Wood Preservers' Association (AWPA), the various national engineering societies and the National Electrical Safety Code (NESC), to the greatest extent practical. When there are no national standards or when RUS determines that the existing national standards are not adequate for rural electric systems, RUS will prepare standards for material and equipment to be used on systems of electric borrowers. RUS standards and specifications will be codified or listed in § 1728.97, Incorporation by Reference of Electric Standards and Specifications. RUS will also prepare specifications for materials and equipment when it determines that such specifications will result in reduced costs, improved materials and equipment, or in the more effective use of engineering services.

(b) *Deviations from Standards.* No member of the RUS staff will be permitted to authorize deviations from the standard specifications, or to establish or change the technical standards, or to authorize the use of items that have not received acceptance by the Technical Standards Committees, except as provided for under § 1728.70, or by authorization and/or delegation of authority by the Administrator of RUS.

(c) *Category of Items.* Items appearing in the List of Materials are listed by categories of generic items which are used in RUS construction standards incorporated by reference in § 1728.97. RUS will establish and define these categories and will establish all criteria for acceptability within these categories.

[50 FR 47710, Nov. 20, 1985. Redesignated at 55 FR 39395, Sept. 27, 1990, and amended at 55 FR 53487, Dec. 31, 1990]

§ 1728.30 Inclusion of an item for listing or technical acceptance.

(a) *Scope.* RUS, through its Technical Standards Committees ''A'' and ''B'' will determine the acceptability of certain standards, standard specifications, standard drawings, and items of materials and equipment to be used in transmission, distribution and general plant (excluding office equipment, tools, and work equipment, and consumer-owned electric wiring facilities).

(b) *Addresses of Committees.* The address of Technical Standards Committee ''A'' is: Chairman, Technical Standards Committee ''A'' (Electric), Rural Utilities Service, U.S. Department of Agriculture, Washington, DC 20250–1500. The address of Technical Standards Committee ''B'' is: Chairman, Technical Standards Committee ''B'' (Electric), Rural Utilities Service, U.S. Department of Agriculture, Washington, DC 20250–1500.

(c) *Review by Technical Standards Committee ''A''.* All proposals for listing a product in the List of Materials must be addressed to Technical Standards Committee ''A.'' This committee will consider all proposals made by sponsors of specifications, drawings, materials, or equipment in categories for which RUS has established criteria for acceptability. A sponsor may be a manufacturer, supplier, contractor or any other person or organization which has made an application for listing or has requested an action by the committee. Committee ''A'' will consider all relevant information presented in determining whether an item should be accepted by Technical Standards Committee ''A.'' Formal rules of evidence and procedure shall not apply to proceedings before this committee.

(d) *Action by Technical Standards Committee ''A''.* (1) Committee ''A'' may take one of the following actions:

(i) Accept an item for listing without conditions (domestic items only),

(ii) Reject an item (domestic or nondomestic),[1]

(iii) Accept an item for listing with conditions (domestic items only),

(iv) Table an item for a time period sufficient to allow the sponsor to be notified and furnish additional information (domestic or nondomestic),

(v) Grant technical acceptance with or without conditions for a period of one year from the date of notification by RUS (nondomestic items only).

(2) All committee decisions regarding the actions listed above must be unanimous. If the vote is not unanimous, the item shall be referred to Technical Standards Committee ''B.'' Written notice of Technical Standards Committee ''A's'' decision, stating the basis for the decision, will be provided to the sponsor.

(3) Items accepted without conditions by the Technical Standards Committees will be considered to be accepted on a general basis. No restrictions as to quantity or application will be placed on items which have received general acceptance. Items accepted subject to certain conditions, such as limited use to gain service experience, or limited use appropriate to certain areas and conditions, will be considered to be accepted on a conditional basis. The conditions will be cited as a part of the listing provided for in § 1728.60, or as part of the technical acceptance for nondomestic items.

(e) *Appeal to Technical Standards Committee ''B''.* A sponsor may request a review of an adverse decision by Technical Standards Committee ''A'' within ten (10) days of notification of such decision by submitting a letter requesting such review to Technical Standards Committee ''B'' (Electric).

(f) *Action by Technical Standards Committee ''B''.* Committee ''B'' may take any of the actions listed for Committee ''A'' in § 1728.30(d). However, for a Committee ''B'' action to be effective it must be by majority vote. Failure to obtain a majority on one of the proposed actions shall mean that the product will not be listed or accepted. Committee ''B's'' determination shall be based on the record developed before Committee ''A'' and such additional information as Committee ''B'' may request. Formal rules of procedure and evidence shall not apply to proceedings before Committee ''B.'' Written notice of Committee ''B's'' decision, stating the basis of the decision, will be provided to the sponsor.

(g) *Appeal to the Administrator.* In the event of an adverse decision by Committee ''B,'' the sponsor may, within ten (10) days of notification of such decision, request a review of this decision by submitting a letter to the Administrator requesting such a review.

(h) *Change in Design.* RUS acceptance of an item will be conditioned on the understanding that no design changes (material or dimensions) affecting the quality, strength, or electrical characteristics of the item shall be made without prior concurrence of Technical Standards Committee ''A.''

[50 FR 47711, Nov. 20, 1985. Redesignated at 55 FR 39395, Sept. 27, 1990]

§ 1728.40 Procedure for submission of a proposal.

(a) *Written Request.* Consideration of an item of material or equipment will be obtained by the sponsor through the submission of a written request in an

[1] Nondomestic items are items which do not qualify as domestic products pursuant to RUS ''Buy American'' requirement.

original and five copies addressed to the Chairman, Technical Standards Committee ''A'' (Electric). The letter must include the catalog number or other identifying number or code as well as a description of the item. In the event that an item being submitted is also intended for consideration by Technical Standards Committee ''A'' (Telephone), a separate request must be made to the telephone committee. (See part 1755 of this chapter).

(b) *Technical and Performance Data.* Six copies of the specification of manufacture, drawings and test data must be submitted to the committee. Six copies of the performance history shall also be submitted unless RUS determines that such performance history is not reasonably available.

(c) *Sample.* One sample of the item must be submitted to the Chairman, Technical Standards Committee ''A,'' unless RUS waives the requirements of the sample. In case of large, bulky or extremely heavy samples, the sponsor should contact the Chairman, Technical Standards Committee ''A'' (Electric), at the above address, before any sample is shipped.

(d) *Action on Proposal.* RUS will inform a sponsor of the action taken on the sponsor's proposal.

[50 FR 47711, Nov. 20, 1985. Redesignated at 55 FR 39395, Sept. 27, 1990]

§ 1728.50 Removal of an item from listing or technical acceptance.

(a) *Removal Actions.* An item of material or equipment may be removed from the listing or technical acceptance in accordance with the following procedures upon determination that the item is unsatisfactory or has been misrepresented to the owner or RUS.

(b) *Notification by the Committee.* The sponsor of an item of material or equipment will be notified in writing of a proposal to remove such item from the listing or technical acceptance.

(c) *Supplemental Information.* Within ten (10) days of receipt of such notification, the sponsor may submit to Committee ''A'' a letter expressing the sponsor's intent to submit written supplemental technical information relevant to Committee ''A's'' determination. The sponsor must submit such information within twenty (20) days from the submission of its letter to Committee ''A.'' Committee ''A'' will have the discretion of making a decision following the expiration of the time periods provided in this paragraph.

(d) *Review by the Technical Standards Committee ''A''.* Committee ''A'' will consider all relevant information presented in determining whether an item should be removed from the listing or technical acceptance. Formal rules of evidence and procedure shall not apply to proceedings before Technical Standards Committee ''A.''

(e) *Action by the Technical Standards Committee ''A''.* Committee ''A'' may take one of the following actions:

(1) Order the immediate removal of the item from the listing, or technical acceptance,

(2) Condition the item's continued listing, or technical acceptance,

(3) Recommend a basis of settlement which will adequately protect the interest of the Government, or

(4) Delay the effectiveness of its decision for a time period sufficient to allow the sponsor to appeal to Technical Standards Committee ''B.''

All committee ''A'' decisions regarding the actions listed above must be by unanimous vote. If the vote is not unanimous, the item will be referred to Technical Standards Committee ''B.''

Written notice of Technical Standards Committee ''A's'' decision, stating the basis for the decision, will be provided to the sponsor.

(f) *Additional Opportunity to Present Information.* At the request of the sponsor, RUS may afford additional opportunity for consideration of relevant information. Such additional opportunity may include, without limitation, a meeting between RUS and the sponsor in such a forum that RUS may determine. In making this decision, RUS will consider, among other things, the best interests of RUS, its borrowers, and the sponsor, and the best manner to develop sufficient information relating to the proposed action.

(g) *Appeal to the Technical Standards Committee ''B''.* Within ten (10) days of notification of Committee ''A's'' decision, a sponsor may appeal in writing to Technical Standards Committee ''B'' to review Committee ''A's'' decision,

specifying the reasons for such a request. Committee ''B's'' determination, in response to such request, shall be based on the record developed before Committee ''A'' and such additional information as Committee ''B'' may request. Formal rules of procedure and evidence shall not apply to proceedings before Committee ''B.''

(h) *Action by Technical Standards Committee ''B''.* Committee ''B,'' by majority vote, may take one of the following actions:

(1) Order the immediate removal of the item from listing, or technical acceptance,

(2) Condition the item's continued listing, or technical acceptance,

(3) Recommend a basis of settlement which adequately protects the interests of the Government, or

(4) Delay the effectiveness of its decision for a time period sufficient to allow the sponsor to appeal to the Administrator of RUS.

Failure to obtain a majority vote on any of the above actions shall mean that the product will continue to be listed or accepted.

Written notice of Committee ''B's'' decision stating the basis of the decision will be provided to the sponsor.

(i) *Appeal to the Administrator.* Within ten (10) days of the receipt of Committee ''B's'' decision, a sponsor may appeal to the Administrator to review Committee ''B's'' decision. If an appeal is made, the sponsor shall submit a written request to the Administrator, Rural Utilities Service, Room 4053, South Building, U.S. Department of Agriculture, Washington, DC 20250–1500 specifying the reasons to request reconsideration. The Administrator will have the option to decline the request, in which case the decision of Committee ''B'' shall stand. If a review is granted, the determination by the Administrator or the Administrator's designee shall be based on the record developed before Committee ''A'' and Committee ''B'' and such additional information as the Administrator may request. Formal rules of procedure and evidence shall not apply to the actions of the Administrator.

(j) *Action by the Administrator.* The Administrator may take one of the following actions:

(1) Order the immediate removal of the item from the listing, or technical acceptance,

(2) Condition its continued listing, or technical acceptance, or

(3) Recommend a basis of settlement which adequately protects the interests of the Government.

Written notice of the Administrator's determination, stating the basis for the decision, will be provided to the sponsor.

The Administrator's actions are final.

[50 FR 47711, Nov. 20, 1985. Redesignated at 55 FR 39395, Sept. 27, 1990]

§1728.60 List of materials and equipment.

(a) *General.* Those items of material or equipment accepted by Technical Standards Committee ''A'' or ''B,'' with the exception of technically accepted nondomestic items, will be listed in the List of Materials. Items which do not qualify as domestic products may be accepted on a technical basis only (technical acceptance) for a period of one year as provided in §1728.30(c)(1) and will not be included in the List of Materials.

(b) *Publishing and Revisions.* RUS will reissue the List of Materials every year, dated July, and issue supplements, if needed, dated October, January, and April of every year. An RUS office copy, which is the official current copy, of the List of Materials, will be updated every time changes are made by the Technical Standards Committees.

(c) *Dual Listings.* RUS, through its Technical Standards Committees, will accept for listing only one item of a particular type of material or equipment for each manufacturer. If a manufacturer submits an item to perform the identical function of a listed item, RUS, through its Technical Standards Committees, may accept that item and remove the one previously listed. RUS will list only new items of material and equipment in the List of Materials. Used items will not be considered for listing.

[50 FR 47712, Nov. 20, 1985. Redesignated at 55 FR 39395, Sept. 27, 1990]

§ 1728.70 Procurement of materials.

(a) *By Owner.* When purchasing the type of materials included in the List of Materials, RUS borrowers shall purchase only materials listed in the List of Materials, or materials which have a current technical acceptance by RUS and meet the ''Buy American'' requirement.

(b) *By Contractor.* When performing work for an RUS borrower, contractors shall supply only items from the general acceptance pages of the List of Materials, or obtain the borrower's concurrence prior to purchase and use of a technically nondomestic item or any item listed on a conditional basis.

(c) *Procurement of Unlisted Items.* (1) The borrower shall request prior approval from RUS for use of an item that does not fall in categories established by RUS in the List of Materials for which acceptability has been established by the Technical Standards Committees.

(2) RUS will also determine, on a case-by-case basis, whether to allow use of an unlisted item in emergency situations and for experimental use or to meet a specific need. For purposes of this part 1728, an emergency shall mean a situation wherein the supply of listed material and equipment from the industry is not readily available, or the standard designs are not applicable to the borrower's specific problem under consideration.

(3) RUS will make arrangements for test or experimental use of newly developed items requiring limited trial use. RUS, working with the borrower and the manufacturer, will establish test locations for the items to facilitate installation and observation.

[50 FR 47712, Nov. 20, 1985. Redesignated at 55 FR 39395, Sept. 27, 1990]

§ 1728.97 Incorporation by reference of electric standards and specifications.

(a) The following electric bulletins have been approved for incorporation by reference by the Director of the Office of the Federal Register. The bulletins containing construction standard (50–1 to 50–14) and Bulletin 50–18 (DT–5C), may be purchased from the Superintendent of Documents, U.S. Government Printing Office, Washington, DC 20402. The bulletins containing specifications for materials and equipment (50–15 to 50–99) may be obtained from the Rural Utilities Service, Administrative Services Division, Room 0175–S, Washington, DC 20250. The terms ''RUS form'', ''RUS standard form'', ''RUS specification'', and ''RUS bulletin'' have the same meanings as the terms ''REA form'', ''REA standard form'', ''REA specification'', and ''REA bulletin'', respectively unless otherwise indicated.

The bulletins are available for inspection at the Office of the Federal Register, 800 North Capitol Street, NW., suite 700, Washington, DC. These materials are incorporated as they exist on the date of the approval and a notice of any change in these materials will be published in the FEDERAL REGISTER.

(b) *List of Bulletins.*

Bulletin 50–1 (T–805–B), Electric Transmission Specifications and Drawings for 115 kV to 230 kV (10–88)

Bulletin 50–2 (T–805–A), Electric Transmission Specifications and Drawings for 34.5 kV to 69 kV (2–73)

Bulletin 50–3 (D–804), Specifications and Drawings for 12.5/7.2 kV Line Construction (4–83)

Bulletin 50–4 (D–801), Specification and Drawings for 34.5/19.9 kV Distribution Line Construction (11–86)

Bulletin 50–5 (D–803), Specifications and Drawings for 14.4/24.9 kV Line Construction (9–69)

Bulletin 50–6 (D–806), Specifications and Drawings for Underground Electric Distribution (3–90)

Bulletin 50–15 (DT–3), RUS Specifications for Pole Top Pins with 1⅜′ Diameter Lead Thread (1–51)

Bulletin 50–16 (DT–4), RUS Specifications for Angle Suspension Brackets (3–52)

Bulletin 50–19 (DT–7), RUS Specifications for Clevis Bolts (8–53)

Bulletin 50–23 (DT–18), RUS Specifications for 60″ Wood Crossarm Braces (2–71)

Bulletin 50–31 (D–3), RUS Specifications for Pole Top Pins with 1″ Diameter Lead Threads (2–79)

Bulletin 50–32 (D–4), RUS Specifications for Steel Crossarm Mounted Pins with 1″ Diameter Lead Threads (10–50)

Bulletin 50–33 (D–5), RUS Specifications for Single and Double Upset Spool Bolts (2–51)

Bulletin 50–34 (D–6), RUS Specifications for Secondary Swinging Clevises (12–70)

Bulletin 50–35 (D–7), RUS Specifications for Service Swinging Clevises (9–52)

Bulletin 50–36 (D–8), RUS Specifications for

Service Deadend Clevises (9–52)
Bulletin 50–40 (D–14), RUS Specifications for Pole Top Brackets for Channel Type Pins (9–51)
Bulletin 50–41 (D–15), RUS Specifications for Service Wireholders (11–51)
Bulletin 50–55 (T–2), RUS Specifications for Overhead Ground Wire Support Brackets (5–53)
Bulletin 50–56 (T–3), RUS Specifications for Steel Plate Anchors for Transmission Lines (12–53)
Bulletin 50–60 (T–9), RUS Specification—Single Pole Steel Structures, Complete with Arms (12–71)
Bulletin 50–70 (U–1), RUS Specification for 15 kV and 25 kV Primary Underground Power Cable (12–22–87)
Bulletin 50–72 (U–4), RUS Specification for Electrical Equipment Enclosures (5–35 kV) (10–79)
Bulletin 50–73 (U–5), RUS Specifications for Pad-Mounted Transformers (Single and Three-Phase) (1–77)
Bulletin 50–74 (U–6), RUS Specification for Secondary Pedestals (600 Volts and Below) (10–79)
Bulletin 50–91 (S–3), RUS Specifications for Step-Down Distribution Substation Transformers (34.4–138 kV) (1–78)
Bulletin 1728F–700, RUS Specification for Wood Poles, Stubs and Anchor Logs (8–93).

[48 FR 31853, July 12, 1983, as amended at 52 FR 22289, June 11, 1987; 52 FR 48799, Dec. 28, 1987; 53 FR 39229, Oct. 6, 1988; 53 FR 44176, Nov. 2, 1988; 55 FR 8909, Mar. 9, 1990. Redesignated at 55 FR 39395, Sept. 27, 1990, as amended at 56 FR 1563, Jan. 16, 1991; 58 FR 41398, Aug. 3, 1993; 59 FR 66440, Dec. 27, 1994]

§1728.201 RUS Bulletin 1728H-701, RUS Specification for Wood Crossarms (Solid and Laminated), Transmission Timbers and Pole Keys.

(a) *General provisions.* (1) This section implements contractual provisions between RUS and borrowers receiving financial assistance from RUS. The contractual agreement between RUS and its borrowers requires the borrower's system to be constructed in accordance with RUS accepted plans and specifications. Each RUS electric borrower must purchase only wood crossarms produced in accordance with the specification in this section.

(2) Each RUS electric borrower shall require each contractor to agree in writing to furnish only materials produced in accordance with the specification in this section.

(3) This specification describes the minimum acceptable quality of wood distribution crossarms and transmission crossarms (hereinafter called crossarms) that are purchased by or for RUS borrowers. Where there is conflict between this specification and any other specification referred to in this section, this specification shall govern.

(4) Various requirements relating to quality control and inspection are contained in §1728.202 of this part, RUS Specification for Quality Control and Inspection of Timber Products. Section 1728.201 of this part and the American National Standards Institute (ANSI) 05.2, 1983, American National Standard for Wood Products—Structural Glued Laminated Timber for Utility Structures, shall be followed exactly and shall not be interpreted or subjected to judgment by the quality control person or an independent inspector.

(5) The borrower shall purchase from producers only material that meets the requirements of this specification. Each purchaser shall use a written purchase order to purchase material for use in RUS financed systems in order to insure compliance with the standards and specifications of this part. The written purchase order shall contain a provision that specifically requires the producer to comply with the provisions of this part. The purchase order shall contain a provision that specifically requires the producer to make the treating plant, and storage areas available, during normal business hours, in order for representatives of either the purchaser or RUS to inspect such to determine compliance with the standards and specifications of this part.

(6) The borrower shall insure that the producer provides the inspectors with full information (drawings, etc.) relating to the requirements contained in purchase order which is supplementary to this specification.

(7) The borrower shall insure that the producer maintains, or has access to, adequate laboratory facilities at or very near the treating plant. All chemical tests, assays or analyses associated with the treatment shall be independently performed in this laboratory by both the quality control designee and the borrower's inspector. If acceptable to RUS on a case-by-case basis,

the producer may use a central laboratory.

(8) Inspection and treatment of all timber products produced under this specification should be performed after receipt of the order from the purchaser, except as provided for reserve treated stock.

(9) The borrower shall insure that each inspection agency maintains its own central laboratory with qualified staff capable of completely analyzing the preservative and treatments. If acceptable to RUS, this central laboratory may be used for the independent inspector's routine assays, with results made available the next working day.

(10) The testing and inspection of the lamination process shall be in accordance with American Institute of Timber Construction (AITC) 200–83, Inspection Manual.

(11) With the exception of reserve treated stock, all invoices for treated timber products shall be accompanied, in duplicate, by a copy of the producer's Certificate of Compliance and a copy of either the Independent Inspection Report or a Quality Assurance Plan Certificate. The certificate shall be presented to the purchaser with the invoice. For reserve treated stock, inspection reports shall be available from the inspection agency. When shipped from reserve stock, the invoice shall bear an endorsement and a further certification by the producer that the material meets the requirements of this specification and any supplementary requirements cited in the purchase order under which it is purchased.

(12) Crossarms shall be warranted to conform to this specification. If any crossarm is determined to be defective or does not conform to this specification within 1 year after shipment to the borrower, it shall be replaced as promptly as possible by the producer. In the event of failure to do so, the purchaser may make such replacement and the cost of the crossarm, at destination, recoverable from the producer.

(b) *Definitions.*

Arm refers to structural wood member used to support electrical conductors.

Certificate of compliance is a certification by an authorized employee of the producer that the material shipped meets the requirements of this specification and any supplementary requirements specified in a purchase order from a borrower or the borrower's contractor.

Crossarm is a term used interchangeably with arm.

Independent inspection relates to examination of material by an independent inspector employed by a commercial inspection agency.

Inspection means an examination of material in sufficient detail to insure conformity to all phases of the specification under which it was purchased.

Lot is a quantity of crossarms of like size, conditioning, and fabrication, usually making up one treating charge.

Producer is used to describe the party who manufactures and treats crossarms.

Purchaser refers to either the RUS borrower or contractors acting as the borrower's agent, except where a part of the specification specifically refers to only the RUS borrower or the contractor.

Quality control designee refers to an individual designated by the producer to be responsible for quality control.

Reserve treated stock consists of timber products treated in accordance with this specification, prior to and in anticipation of the receipt of specific orders, and held in storage ready for immediate shipment.

Supplier is a term used interchangeably with producer, or in some cases, may be the distributor selling crossarms to the borrower.

Treating plant is the organization that applies the preservative treatment to the crossarms.

(c) *Related specifications and standards incorporated by reference.* The following specifications and standards are incorporated by reference. This incorporation by reference was approved by the Director of the Federal Register in accordance with 5 U.S.C. 552(a) and 1 CFR part 51. Copies of each reference are available for inspection during normal business hours at RUS, room 1250-S, U.S. Department of Agriculture, Washington, DC 20250 or at the Office of the Federal Register, 800 North Capitol Street, NW., suite 700, Washington, DC.

Copies of these standards and specifications may be purchased from the addresses shown below.

(1) West Coast Lumber Inspection Bureau, Standard No. 17, Grading Rules for West Coast Lumber, September 1, 1991, available from West Coast Lumber Inspection Bureau, P.O. Box 23145, Portland, Oregon 97223, telephone (503) 639–0651, Fax (503) 684–8928.

(2) Southern Pine Inspection Bureau, Standard Grading Rules for Southern Pine Lumber, October 15, 1991, available from Southern Pine Inspection Bureau, 4709 Scenic Highway, Pensacola, Florida 32504, telephone (904) 434–2611.

(i) Southern Pine Inspection Bureau, Special Product Rules for Structural, Industrial, and Railroad-Freight Car Lumber, October 15, 1991, available from Southern Pine Inspection Bureau, 4709 Scenic Highway, Pensacola, Florida 32504, telephone (904) 434–2611.

(ii) [Reserved]

(3) American Wood Preservers' Association (AWPA), Book of Standards, 1991 edition, available from AWPA, P.O. Box 286, Woodstock, Maryland 21163–0286.

(i) A1–91, Standard Methods for Analysis of Creosote and Oil-Type Preservatives.

(ii) A2–91, Standard Methods for Analysis of Waterborne Preservatives and Fire-Retardant Formulations.

(iii) A3–91, Standard Methods for Determining Penetration of Preservatives and Fire Retardants.

(iv) A5–91, Standard Methods for Analysis of Oil-Borne Preservatives.

(v) A6–89, Method for the Determination of Oil-Type Preservatives and Water in Wood.

(vi) A7–75, Standard Wet Ashing Procedure for Preparing Wood for Chemical Analysis.

(vii) A9–90, Standard Method for Analysis of Treated Wood and Treating Solutions by X-Ray Spectroscopy.

(viii) A11–83, Standard Method for Analysis of Treated Wood and Treating Solutions by Atomic Absorption Spectroscopy.

(ix) C1–91, All Timber Products—Preservative Treatment by Pressure Processes.

(x) C4–91, Poles—Preservative Treatment by Pressure Processes.

(xi) C8–91, Western Red Cedar and Alaska Yellow Cedar Poles—Preservative Treatment by the Full-Length Thermal Process.

(xii) C10–91, Lodgepole Pine Poles—Preservative Treatment by the Full-Length Thermal Process.

(xiii) C12–90, Western Larch Poles—Full-Length Preservative Treatment by Thermal Process.

(xiv) M1–90, Standard for the Purchase of Treated Wood Products.

(xv) M2–91, Standard for Inspection of Treated Timber Products.

(xvi) M3–81, Standard Quality Control Procedures for Wood Preserving Plants.

(xvii) M4–91, Standard for the Care of Preservative-Treated Wood Products.

(xviii) P1/P13–91, Standard for Coal Tar Creosote for Land and, Fresh Water and Marine (Coastal Water Use).

(xix) P5–91, Standards for Waterborne Preservatives.

(xx) P8–91, Standards for Oil-Borne Preservatives.

(xxi) P9–91, Standards for Solvents and Formulations for Organic Preservative Systems.

(4) American Institute of Timber Construction (AITC) 200–83, Inspection Manual, 1987 edition, available from AITC, 333 West Hampden Avenue, Englewood, Colorado 80110, telephone (303) 761–3212.

(5) American National Standards Institute (ANSI) 05.2–1983, American National Standard for Wood Products—Structural Glued Laminated Timber for Utility Structures, available from ANSI, 1430 Broadway, New York, New York 10018.

(6) American Society for Testing and Materials (ASTM) D9–87 (1992), Standard Terminology Relating to Wood, available from ASTM, 1916 Race Street, Philadelphia, PA 19103–1187, telephone number (215) 299–5585.

(d) *Independent inspection plan*. This plan or a Quality Assurance Plan, as described in paragraph (e) of this section, is acceptable for supplying crossarms. All crossarms produced under the independent inspection plan for use on an RUS financed system shall be inspected by a qualified independent inspector in accordance with § 1728.202 of this part.

(1) The borrower has the prerogative to contract directly with the inspection agency for service. The borrower should, where practical, select the inspection agency so that continual employment is dependent only on performance acceptable to the borrower and in accordance with this specification. The selected inspection agency shall not subcontract the service to any other inspection agency without the prior written consent by the borrower.

(2) The producer shall not be a party to the selection of the inspection agency by the borrower and shall not interfere with the work of the inspector, except to provide notification of the readiness of material for inspection. To obtain the inspection services for reserve stock, the producer may deal directly with the inspection agency. Under the Independent Inspection Plan, the producer shall not treat material before it has been properly inspected in the white, as evidenced by the inspector's hammer mark.

(3) The methods of inspection described in this section and in § 1728.202 of this part shall be used no matter which plan crossarms are produced under, i.e., Independent Inspection Plan, or Quality Assurance Plans, as described in this section. The number of crossarms actually inspected by monitors of quality control under a Quality Assurance Plan may vary from the number of crossarms inspected under the Independent Inspection Plan.

(e) *Quality assurance plans.* The producer shall furnish crossarms conforming to this specification as monitored by a Quality Assurance Plan acceptable to RUS. RUS borrower groups or agents for borrower groups endeavoring to operate Quality Assurance Plans shall submit their plan for assuring quality control to the Director, Electric Staff Division, Rural Utilities Service, Washington, DC 20250–1500, for specific approval prior to contracting with RUS borrowers under such plans.

(f) *Material requirements*—(1) *Material and grade.* All crossarms furnished under this specification shall be free of brashy wood, decay, and insect holes larger than 3/32 of an inch (0.24 cm), and shall meet additional requirements as shown on specific drawings. They shall be made of one of the following:

(i) Douglas-fir which conforms to the applicable crossarm provisions of paragraphs 170 and 170a, or the applicable transmission arm provisions of paragraphs 169 and 169a of the 1991 Standard Grading Rules for West Coast Lumber No. 17. All references to Douglas-fir shall be of coastal origin;

(ii) Southern Yellow Pine which conforms to the provisions of Dense Industrial Crossarm 65, as described in paragraph 31.2 in Southern Pine Inspection Bureau 1991 Special Product Rules for Southern Pine; or

(iii) Laminated wood crossarms shall conform to ANSI 05.2–1983, and have at least the same load carrying capacity as the solid sawn arm it replaces. The load carrying capacity of the laminated arms shall be determined by one of the procedures outlined in ANSI 05.2.

(2) Borrowers may use alternative wood crossarms that are listed in RUS Bulletin 1728C-100, List of Materials Acceptable for Use on Systems of RUS Electrification Borrowers.

(3) *Knots.* Sound, firm, and tight knots, if well spaced, are allowed.

(i) Slightly decayed knots are permitted, except on the top face, provided the decay extends no more than 3/4 of an inch (1.91 cm) into the knot and provided the cavities will drain water when the arm is installed. For knots to be considered well spaced, the sum of the sizes of all knots in any 6 inches (15.24 cm) of length of a piece shall not exceed twice the size of the largest knot permitted. More than one knot of maximum permissible size shall not be in the same 6 inches (15.24 cm) of length. Slightly decayed, firm, or sound ''Pin knots'' (3/8 of an inch (0.95 cm) or less) are not considered in size, spacing, or zone considerations.

(ii) Knots are subject to the following limits on size and location:

Knot Limits For Distribution Arms

DRAWING M-19 (SEE FIGURE 1, EXHIBIT A)

ALL DIMENSIONS IN INCHES

Class of Knot and Location	Maximum Knot Diameter	
	Close Grain	Dense Grain
Round Knots		
Single Knot: Maximum Diameter		
Center Section*		
Upper Half	3/4	1
Lower Half	1	1–1/4
Elsewhere	1–1/4	1–1/2
Sum of Diameters in a 6-Inch Length: Maximum		
Center Section		
Upper Half	1–1/2	2
Lower Half	2	2–1/2
Elsewhere	2–1/2	3

Inch	Cm
3/4	1.91
1	2.54
1–1/4	3.18
1–3/8	3.49
1–1/2	3.81
1–3/4	4.45
1–7/8	4.76
2	5.08
2–1/4	5.72
2–1/2	6.35
3–1/4	8.26
3–1/2	8.89
3–5/8	9.21
4–5/8	11.75
5–5/8	14.29
7–3/8	18.73
9–3/8	23.81

Knot Limits For Transmission Arms

(SEE FIGURE 2, EXHIBIT A)'

ALL DIMENSIONS IN INCHES

Pole Mounting Hole Zone*	Maximum Diameter For Single Knot
Upper Half (inner zone)	3/4
Upper Half (outer zone)	1 for close grain 1–1/4 dense grain

Other Locations Transmission Arm Size**	Narrow Face	Wide Face (Two Sides)	
		Edge	Along Centerline
4–5/8 x 5–5/8 or less	1	1–1/4	1–1/4
5–5/8 x 7–3/8	1–1/4	1–3/8	1–7/8
3–5/8 x 9–3/8	3/4	1–3/4	2–1/4

*No knot will be closer than its diameter to the pole mounting hole.

**For cross sections not shown, refer to grading rules.

(iii) Knot clusters shall be prohibited unless the entire cluster, measured on the worst face, is equal to or less than the round knot allowed at the specific location.

(iv) Spike knots shall be prohibited in deadend arms. Any spike knot across the top face shall be limited to the equivalent displacement of a knot 3/8 of an inch (0.95 cm) deep on one face and the maximum round knot for its particular location on the worst face, with a maximum width of 1 inch (2.54 cm) measured at the midpoint of the spiked section. Elsewhere across the bottom or side faces, spike knots shall not exceed 1/2 the equivalent displacement of a round knot permitted at that location, provided that the depth of the knot on the worst face shall not exceed the maximum round knot allowed at that location.

(v) Loose knots and knot holes shall drain water when the arm is normally installed. In the center section, upper half, they shall not be greater than 1/2 the dimensions of round knots. Elsewhere, they shall not be greater than the round knot dimension. They shall be prohibited in deadend arms.

(vi) All knots except those ''spike'' knots intersecting a corner shall be measured on the least diameter of the knot.

(vii) A knot shall be considered to occupy a specific zone or section if the center of the knot (i.e. pith of knot) is within the zone or on the zone's boundary.

(viii) If a round or oval knot appears on two faces and is in two zones, each face shall be judged independently. When this does not occur, average the least dimension showing on both faces. Knots which occur on only one face of a free of heart center (FOHC) arm shall be permitted to be 25 percent larger than the stated size.

(ix) *Knot spacing.* Two or more knots opposite each other on any face shall be limited by a sum not to exceed the size of a maximum single knot permitted for the location. On all four faces, all knots shall be well spaced.

(x) Knots which have a maximum of 5/8 inch (1.59 cm) diameter may intersect pin holes in the center section. One inch (2.54 cm) diameter knots may intersect pin holes elsewhere.

(4) *Miscellaneous characteristics, features and requirements.* (i) The top face of distribution crossarms shall not have more than four medium pitch and bark pockets in 8 foot (2.4 m) arms, and

not more than five pitch and bark pockets in 10 foot (3.0 m) arms. Elsewhere a maximum of six medium pockets in 8 foot (2.4 m) arms and eight in 10 foot (3.0 m) arms shall be permitted. Equivalent smaller pockets shall be permissible. An occasional large pocket is permissible.

(ii) Shakes shall be prohibited.

(iii) *Checks.* Prior to treatment on properly seasoned arms, single face checks shall not exceed an average penetration of 1/4 the depth from any face and shall be limited to 10 inches (25.40 cm) long on the top face, and 1/3 the arm length on the other faces. Checks shall not be repeated in the same line of grain in adjacent pin holes. The sum of the average depths of checks occurring in the same plane on opposite faces shall be limited to 1/4 the face depth.

(iv) Compression wood shall be prohibited on any face. It is permitted if wholly enclosed in the arm, more than six annual rings from the surface, and not over 3/8 of an inch (0.95 cm) in width.

(v) Insect holes larger than 3/32 of an inch (0.24 cm) shall be prohibited. Pin holes (i.e. holes not over 1/16 of an inch (0.16 cm) diameter) shall be allowed if scattered and not exceeding 10 percent of the arm girth.

(vi) Wane shall be allowed on one edge, limited to approximately 1 inch (2.54 cm), measured across the corner. Outside of the top center section, an aggregate length not to exceed 2 feet may have wane up to 1–1/2 inches (3.81 cm) on an occasional piece on one or both edges. Bark shall be removed.

(vii) Prior to preservative treatment, crook, bow, or twist shall not exceed 1/2 of an inch (1.27 cm) in 8 foot arms (2.4 m) and 5/8 of an inch (1.59 cm) in 10 foot (3.0 m) arms.

(g) *Manufacture.* (1) All dimensions and tolerances shall conform to those shown on the drawings in this section or drawings supplied with the purchase order. Drawings supplied shall meet or exceed minimum dimensions and tolerances shown on the drawings in this section. Cross-sectional dimensions shall be measured and judged at about 1/4 the arm length, except when the defects of ''skip dressing'' or ''machine bite or offset'' are involved.

(2) Lamination techniques shall comply with ANSI 05.2–1983.

(3) Pin and bolt holes shall be smoothly bored without undue splintering where drill bits break through the surface. The center of any hole shall be within 1/8 of an inch (0.32 cm) of the center-line locations on the face in which it appears. The holes shall be perpendicular to the starting and finishing faces.

(4) *Shape.* The shape of the arms at any cross section, except for permissible wane, shall be as shown on the respective drawings in this section or supplied with the order. The two top edges may be either chamfered or rounded 3/8 of an inch (0.95 cm) radius. The two bottom edges may be slightly eased 1/8 of an inch (0.32 cm) radius for the entire length.

(5) *Incising.* The lengthwise surfaces of Douglas-fir crossarms shall be incised approximately 1/4 of an inch (0.64 cm) deep. The incision shall be reasonably clean cut with a spacing pattern that insures uniform penetration of preservative.

(6) *Workmanship.* All crossarms shall be first quality workmanship. Crossarms shall be dressed on four sides, although ''hit and miss skips'' may occur on two adjacent faces on occasional pieces. Five (5) percent of a lot or shipment may be 1/8 of an inch (0.32 cm) scant in thickness or width at the ends for a length not exceeding 6 inches (15.24 cm), or may have 1/8 of an inch (0.32 cm) machine bite on offset.

(h) *Conditioning prior to treatment.* (1) All solid sawn crossarms shall be made of lumber which has been kiln-dried. Douglas-fir arms shall have an average moisture content of 19 percent or less, with a maximum not to exceed 22 percent. Southern Yellow Pine arms shall have an average moisture content of 22 percent or less, with a maximum not to exceed 30 percent.

(2) Moisture content levels shall be measured at about 1/4 the length and at a depth of about 1/5 the crossarm's thickness. Additionally, the moisture content gradient between the shell (i.e. 1/4 of an inch (0.64 cm) deep) and the core (i.e. about 1 inch (2.54 cm) deep) shall not exceed 5 percentage points.

(3) A minimum of at least 20 solid sawn crossarms per treating charge

shall be measured to verify moisture content and shall be duly recorded by the quality control designee or independent inspector.

(4) The moisture content of lumber used in laminating shall, at the time of gluing, be within the range of 8 to 12 percent, inclusive.

(i) *Preservatives.* (1) The preservatives shall be:

(i) Creosote which conforms to the requirements of AWPA Standard P1 when analyzed in accordance with the methods in AWPA Standard A1, sections 2, 3, 4, either 5 or 9, and 6;

(ii) Pentachlorophenol which contains not less than 95 percent chlorinated phenols and conforms to AWPA Standard P8 when analyzed in accordance with AWPA Standard A5 or A9. The hydrocarbon solvents for introducing the preservative into the wood shall meet the requirements of AWPA Standard P9 Type A; or

(iii) Waterborne preservatives, which may only be one of the following:

(A) Ammoniacal Copper Arsenates (ACA) and Ammoniacal Copper Zinc Arsenate (ACZA) which shall meet the requirements of AWPA Standard P5, when analyzed in accordance with methods in AWPA Standards A2, A9, or A11; and

(B) Chromated Copper Arsenates (CCA) which shall meet the requirements of one of the formulations given in AWPA Standard P5, sections 4, 5 or 6, and 10. Tests to establish conformity shall be made in accordance with AWPA Standards A2, A9, or A11.

(1) The pH of treating solutions of the waterborne preservatives shown in AWPA Standard P5, section 10, shall be determined in accordance with AWPA Standard A2, section 8.

(2) Waterborne preservatives are available either as oxides, which form non-ionizing chemical compounds in the wood, or as salts, which leave ionizing compounds as well as non-ionizing compounds in the wood. Salt formulations of a waterborne preservative are more corrosive to metal than the oxide formulation and may cause surface deposits. Unless otherwise specified in the purchase order, the oxide formulations of waterborne preservatives shall be supplied.

(3) Douglas-fir crossarms shall not be treated with CCA preservatives.

(4) Materials treated with waterborne preservatives shall be free of visible surface deposits.

(iv) Copper Naphthenate (CuN) concentrate used to prepare wood preserving solutions shall contain not less than 6 percent nor more than 8 percent copper in the form of Copper Naphthenate and shall conform to AWPA Standard P8 when analyzed in accordance with AWPA Standard A5. The hydrocarbon solvents for introducing the preservative into the wood shall meet the requirements of AWPA Standard P9 Type A.

(2) [Reserved]

(j) *Preservative treatment.* (1) All timber products treated under this specification shall be treated by either a pressure or a thermal (nonpressure) process.

(2) These materials may be further conditioned by steaming, or by heating in hot oil (Douglas-fir), within the following limits:

	Time Hours (max.)	Temperature Deg. F (max.)
Steam	3	220 (104.4C)
Heating in Preservative	3	210 (98.9C)

(3) A final steam or hot oil bath may be used only to meet cleanliness requirements of paragraph (k) of this section. Total duration of the final steam bath shall not exceed 2 hours and the temperature shall not exceed 240 degrees Fahrenheit (115.6C).

(k) *Results of treatments.* (1) The quality control designee shall test or supervise the testing of each treated charge for penetration and retention.

(2) *Method of sampling.* When testing penetration and retention, a borer core shall be taken from not less than 20 crossarms in each treating charge. The borings shall be taken from any face except the top face at a point as close to the end as possible, being at least 3 inches (7.62 cm) from the end of the arm and no closer than 3 inches (7.62 cm) from the edge of the holes. The bored holes shall be plugged with preservative-treated plugs driven into the arm. Borings from laminated arms

shall not be taken from the same laminate unless there is an end joint separation.

(3) Penetration by the preservative, as determined in accordance with AWPA Standard A3, shall be 100 percent of the sapwood in crossarms. In the heartwood of Douglas-fir crossarms, the penetration shall be not less than 3 inches (7.62 cm) longitudinally from the edge of holes and ends, and at least 3/16 inch (0.45 cm) from the surface of any face.

(4) Retention of preservative in the outer 6/10 of an inch (1.52 cm) for Douglas-fir and one inch (2.54 cm) for Southern Yellow Pine assay zones at the treating plant shall be not less than:

Preservative	Retention (pcf)	AWPA Analysis Method
Creosote	8	A6
Pentachlorophenol	0.4*	A5
ACA, ACZA, or CCA	0.4	A2, A7, A9, or A11
Copper Naphthenate	0.04	A5, A9, or A11

*This retention is for the lime ignition method. The copper pyridine method, retention 0.36 pcf, is required when timbers may have been in contact with salt water, and for all species native to the Pacific coast region. It is not required when it specifically states on the rough sawn material invoice that this material has not been in contact with salt water or is shown by analysis to have no additional chlorides present in the wood before treating.

(5) Cleanliness of lengthwise surfaces of all crossarms shall be free from tarry, greasy, or sticky material, and from oil exudation and pentachlorophenol crystallization (blooming).

(6) Re-treatment of materials which do not meet the penetration and retention requirements of this specification may be done only twice. Initial treatment steaming time plus re-treatment steaming time, combined, shall not exceed time allowed in paragraph (i) of this section.

(l) *Marks and brands.* (1) All crossarms shall be branded (hot brand) or die-stamped legibly and to a depth of approximately 1/16 of an inch (0.16 cm) before treatment.

(2) The letters and figures shall be not less than 1/2 of an inch (1.27 cm) in height. The top of the brand shall be oriented to the top of the arm.

(3) The brand or die-stamp shall include:

(i) The manufacturer's identification symbol;

(ii) Month and year of manufacture;

(iii) Species of timber such as DF for Douglas-fir and SP for Southern Yellow Pine; and

(iv) The preservative notated with a C for creosote, P for penta, S for salts, or N for Copper Naphthenate.

(4) An example is:

M-6–72 Manufacturer—Month—Year
DF-P Douglas-fir—penta treated

(5) The brand or stamp shall be placed on either of the wide surfaces of the arms, oriented with letters right side up towards the top of the arm and preferably about 1 foot (30.48 cm) from the midpoint of the arm.

(6) The mark should be approximately the same location on each type of crossarm of each producer.

(7) Brands, inspection marks, or quality assurance marks shall be removed from arms that do not meet these specifications

(m) *Storage.* (1) Producers may treat crossarms for reserve stock under any of the RUS approved plans. Prior to treating reserve stock, and annually thereafter, producers shall notify the Director of the Electric Staff Division of their intent to treat reserve stock. The letter of notification shall be addressed to the Director, Electric Staff Division, Rural Utilities Service, Washington, DC 20250–1500.

(2) RUS shall acknowledge, by letter, each notification of intent to treat material for reserve stock under the RUS specification.

(3) RUS's letter acknowledging the plant's advance notice of intent to treat material for reserve treated stock for the calendar year in question shall be evidence of compliance with the notification requirements.

(4) Producers shall notify RUS of:

(i) The locations of all storage or distribution yards where reserve treated stock will be maintained;

(ii) The designation of the RUS-approved plan;

(iii) The name of the selected inspection agency, where applicable; and

(iv) Any changes that occur during the year.

(5) Crossarms treated with oil-borne preservatives which have been held in storage for more than 1 year before shipment to the borrower, shall be reassayed before shipment and shall be

re-treated if found nonconforming for retention on orders placed in accordance with this section.

(6) The crossarms shall meet the assay after re-treatment in accordance with paragraph (k) of this section.

(7) Crossarms which are held in storage after final acceptance shall be stacked in piles or on skids in such a manner as to assure good ventilation. The stacks shall be covered or stored indoors for protection from the sun and weather to reduce checking, bending, and loss of preservative.

(8) Borrowers or their contractors shall not purchase reserve treated stock from plants that fail to comply with the notification requirements.

(n) *Drawings.* (1) The drawings of Exhibit B of this section, Crossarm Drilling Guide, have a type number and show in detail the hole size, shape, and pattern desired for crossarms ordered under this specification.

(2) Purchase orders shall indicate the type required.

(3) Crossarms shall be furnished in accordance with the details of these drawings or in accordance with drawings attached to the purchase order

(4) Technical drawings for transmission crossarms are published in RUS Bulletin 1728F-T805B (formerly 50–1), Electric Transmission Specifications and Drawings, 115kV through 230kV, and RUS Bulletin 1728F-T805A (formerly 50–2), Electric Transmission Specification and Drawings, 34.5kV through 69kV.

(5) Appropriate drawings for transmission arms are to be specified and included with purchase orders.

(o) *Destination inspection.* (1) When cross-sectional tolerances are measured at destination, average shrinkage allowance shall be considered using the arm's current moisture content and actual size.

(2) Using the average shrinkage allowances for Douglas-fir and Southern Yellow Pine as 1 percent size change for each four point moisture content change below the fiber saturation point, calculations can be made to determine if the arm met the minimum size at time of manufacture, when the arm was to meet the average moisture content.

EXHIBIT A TO § 1728.201—DISTRIBUTION AND TRANSMISSION ARMS

DISTRIBUTION ARMS

Figure 1

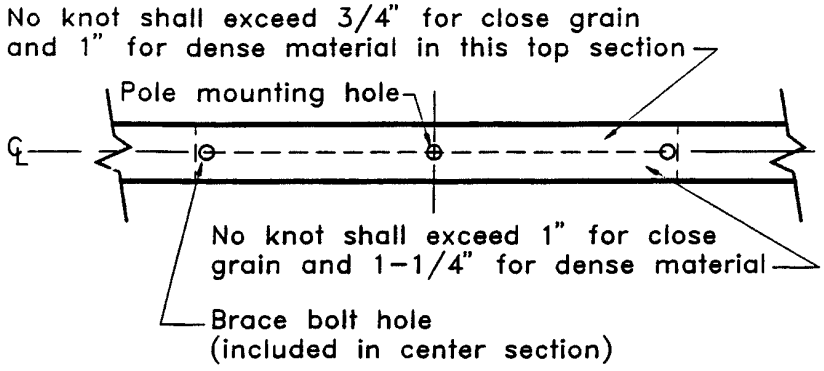

TRANSMISSION ARMS

POLE MOUNTING HOLE ZONE

Figure 2

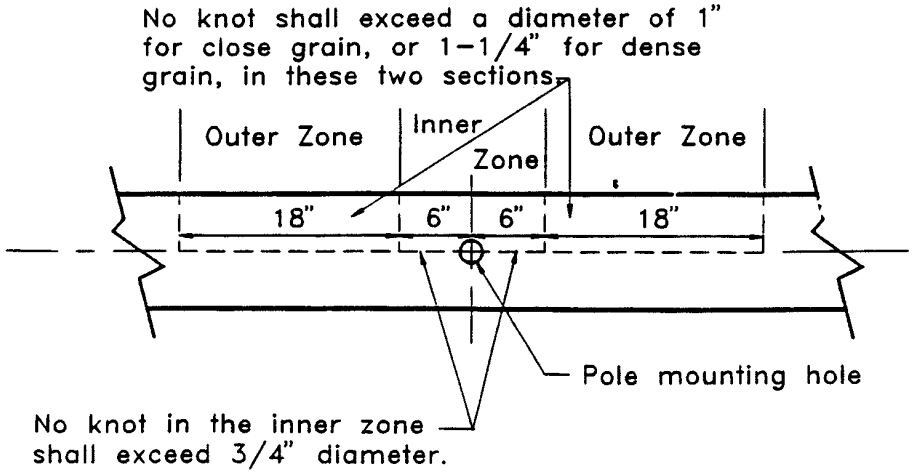

EXHIBIT B TO § 1728.201—CROSSARM DRILLING GUIDE

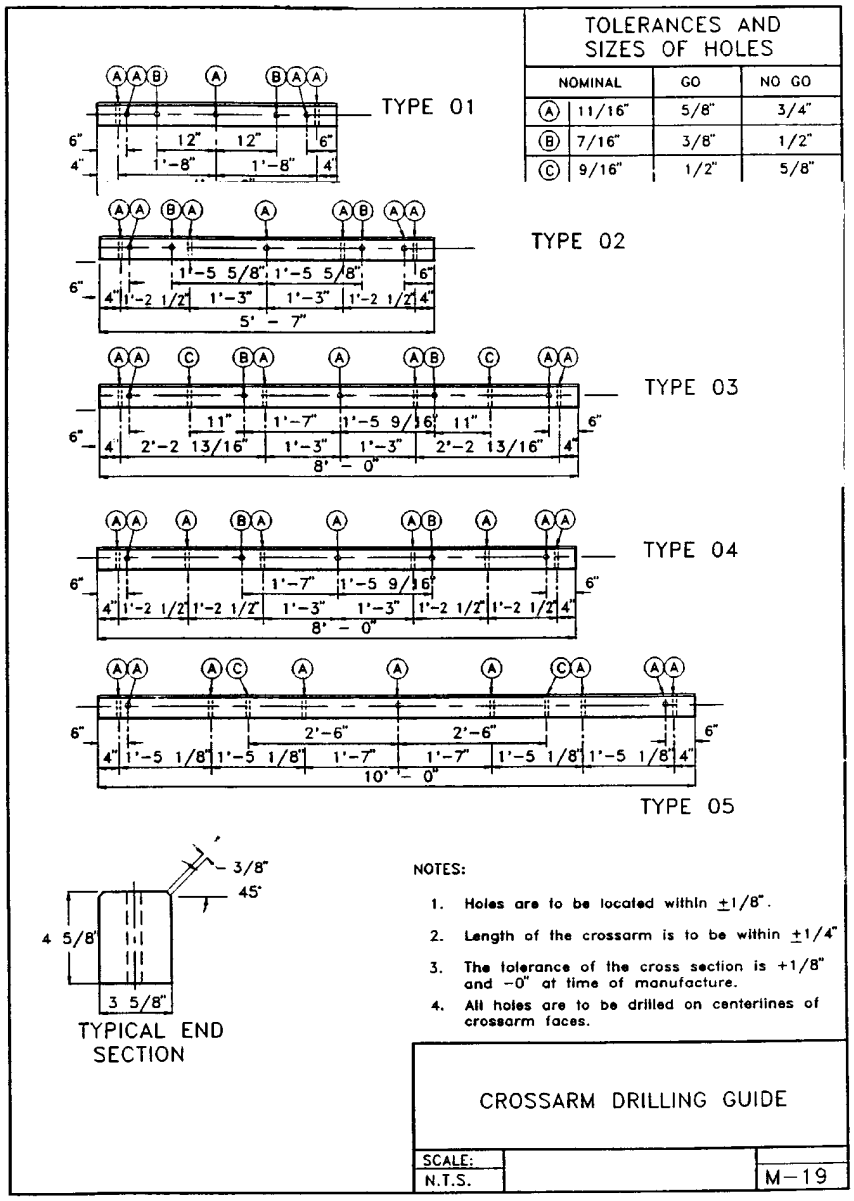

[58 FR 41396, Aug. 3, 1993]

§ 1728.202 RUS Bulletin 1728H-702, RUS Specification for Quality Control and Inspection of Timber Products.

(a) *Scope.* This specification describes in more detail the responsibilities and procedures pertaining to quality control for crossarms, as specified in § 1728.201 of this part, and poles, covered in RUS Bulletin 1728F-700, incorporated by reference in § 1728.97 of this part and in § 1755.97 of 7 CFR part 1755.

(b) *Related specifications and standards incorporated by reference.* The following specifications and standards referenced throughout this section are incorporated by reference. This incorporation by reference is approved by the Director of the Federal Register in accordance with 5 U.S.C. 552(a) and 1 CFR part 51. Copies of each are available for inspection during normal business hours at RUS, room 1250-S, U.S. Department of Agriculture, Washington, DC 20250 or at the Office of the Federal Register, 800 North Capitol Street, NW., suite 700, Washington, DC. Copies of these standards and specifications may be purchased from the addresses shown below.

(1) American Wood-Preservers' Association (AWPA), Book of Standards, 1991 edition, available from AWPA, P.O. Box 286, Woodstock, Maryland 21163–0286.

(i) A1–91, Standard for Coal Tar Creosote for Land and Fresh Water Use.

(ii) A2–91, Standard Methods for Analysis of Waterborne Preservatives and Fire-Retardant Formulations.

(iii) A3–91, Standard Methods for Determining Penetration of Preservatives and Fire Retardants.

(iv) A5–91, Standard Methods for Analysis of Oil-Borne Preservatives.

(v) A6–89, Method for the Determination of Water and Oil-Type Preservatives in Wood.

(vi) A7–75, Wet ashing Procedure for Preparing Wood for Chemical Analysis.

(vii) A9–90, Standard Method for Analysis of Treated Wood and Treating Solutions by X-Ray Emission Spectroscopy.

(viii) A11–83, Analysis of Treated Wood and Treating Solutions by Atomic Absorption Spectroscopy.

(ix) C1–91, Standard for Preservative Treatment by Pressure Processes All Timber Products.

(x) C4–91, Standard for the Preservative Treatment of Poles by Pressure Processes.

(xi) C8–91, Standard for the Full-Length Thermal Process Treatment of Western Red Cedar Poles.

(xii) C10–91, Lodgepole Pine Poles—Preservative Treatment by the Full-Length Thermal Process.

(xiii) C12–90, Western Larch Poles—Full-Length preservative Treatment by Thermal Process.

(xiv) M1–90, Standard for the Purchase and Preservation of Forest Products.

(xv) M2–91, Standard Instructions for the Inspection of Preservative Treatment of Wood.

(xvi) M3–81, Standard Quality Control Procedures for Wood Preserving Plants.

(xvii) M4–91, Standard for the Care of Preservative-Treated Wood Products.

(xviii) P1/P13–91, Standard for Coal Tar Creosote for Land and, Fresh Water and Marine (Coastal Water Use).

(xix) P5–91, Standards for Water-Borne Preservatives.

(xx) P8–91, Standards for Oil-Borne Preservatives.

(xxi) P9–91, Standards for Solvents for Organic Preservative Systems.

(2) American Institute of Timber Construction (AITC) 200–83, Inspection Manual, 1987 edition, available from AITC, 333 West Hampden Avenue, Englewood, Colorado 80110.

(3) American National Standards Institute (ANSI) 05.2–1983, American National Standard for Wood Products—Structural Glued Laminated Timber for Utility Structures, available from ANSI, 1430 Broadway, New York, New York 10018.

(4) American National Standards Institute/American Institute of Timber Construction (ANSI/AITC) A190.1–1983, American National Standard for Wood Products—Structural Glued Laminated Timber, available from ANSI, 1430 Broadway, New York, New York 10018.

(5) American Society for Testing and Materials (ASTM) D9–87 (1992), Standard Terminology Relating to Wood, available from ASTM, 1916 Race Street,

Philadelphia, Pennsylvania 19103–1187, telephone number (215) 299–5585.

(c) *General stipulations.* (1) Each RUS electric borrower shall submit to the Director, Electric Staff Division, Rural Utilities Service, room 1250-S, 14th and Independence Avenue, SW., Washington, DC 20250–1500, in January of each year a list of plants from which it obtained poles or crossarms during the preceding calendar year.

(2) Ultimate quality control is the responsibility of the producer's management; however, a member of the producer's staff shall be designated quality control designee and charged with the responsibility for the exercise of proper quality control procedures. The requirements in American Wood Preservers' Association (AWPA) Standard M3, covering records, adequate laboratory, plant gauges, and other plant facilities including proper storage, shall be followed.

(3) The methods of inspection described in this section shall be used no matter which plan timber products are purchased under, i.e., Insured Warranty Plan, Independent Inspection Plan, or Quality Assurance Plans as described in §1728.201 of this part or RUS Bulletin 1728F-700. The number of poles and crossarms actually inspected by monitors for quality control under a Quality Assurance Plan or the Insured Warranty Plan may vary from the number of poles and crossarms inspected under the Independent Inspection Plan. Under the Independent Inspection Plan, each pole and a sample number of crossarms shall be inspected.

(4) Under the Independent Inspection Plan, the RUS borrower should designate in the purchase order which inspection agency it has selected. Unless the RUS borrower contracts for inspection as a separate transaction, the treating company shall obtain the services of the RUS borrower's designated inspection agency. For reserve treated stock for purchase under the Independent Inspection Plan, the treating company shall obtain the services of an inspection agency. Selection of and changes in inspection agencies for reserve treated stock shall be promptly reported to the Director, Electric Staff Division, Rural Utilities Service, Washington, DC 20250–1500, in accordance with RUS Bulletin 1728F-700, and §1728.201.

(5) Individual inspectors in the employ of Independent Inspection Agencies shall be experienced and competent. The inspector shall perform all phases of the inspection personally and in the proper sequence. The primary responsibility of the inspector is to determine, for the borrower, by careful inspection and verification, that the timber products, preservative, and treatment meet the requirements of RUS Bulletin 1728F-700 and Bulletin 1728H-701 and that the methods, storage facilities, and production equipment conform to applicable RUS specifications. For details of the recommended inspector's qualifications see appendix A of this section.

(6) Laminated materials for use on RUS borrower systems shall follow manufacturing and quality control requirements as specified in ANSI 05.2—1983, American National Standard for Wood Products—Structural Glued Laminated Timber for Utility Structures, and ANSI/AITC A190.1–1983, American National Standard for Wood Products—Structural Glued Laminated Timber. The product shall be marked and certified.

(i) Laminated material shall be inspected by a qualified inspection and testing agency.

(ii) Quality control of material shall be performed to determine conformance with §1728.201 of this part and AITC 200–83, Inspection Manual.

(d) *Quality control and inspection procedures for product acceptance.* It is the responsibility of the plant quality control designee to perform the following procedures to insure that a particular lot of material conforms to the requirements of the applicable RUS specification prior to treatment. After the plant quality control designee has performed these procedures, a particular lot of material shall be released to the inspector for verification of conformance.

(1) Poles can be purchased under any of the three purchase plans. These plans are Insured Warranty Plan, Independent Inspection Plan, or a Quality Assurance Plan. Under the Independent Inspection Plan, all poles in a lot shall

be inspected. Under the Insured Warranty Plan and a Quality Assurance Plan, the number of poles in a lot actually inspected may be less than every pole, depending on the terms of the plans.

(i) Ample space and assistance shall be provided by the treating plant for handling and turning to insure that the surfaces of all items can be adequately inspected.

(ii) Under the Independent Inspection Plan, all poles shall be inspected for conformance to the requirements of RUS Bulletin 1728F-700. If a pole is rejected and the cause of rejection is corrected, the rejected pole may be offered again for inspection as new material.

(iii) Dimensions, length, and circumference shall be measured by a standard steel pole tape to determine that they are in agreement with the details for class and length in the brand and butt stamp. If it is obvious by visual comparison with a measured pole that the brand information is correct, individual poles need not be measured. Pole circumference dimensions made prior to treatment shall govern acceptance. Reduction in dimension due to treatment and shipping shall be not more than 2 percent below the minimum for the pole class.

(iv) If 15 percent of the poles in a lot offered for inspection are defective, the inspector shall terminate the inspection. Re-examination of an entire lot by plant quality control shall be required when the number of rejected poles equals or exceeds 15 percent of the lot inspected. All defective or nonconforming poles either shall be removed from the lot or marked out.

(v) Poles in a lot inspected for decay shall be of the same seasoning condition. If the independent inspector suspects that decay has occurred, he shall cut a slice from both ends for closer examination. If 5 percent of the inspected poles in a lot shows evidence of decay, the entire lot shall be unconditionally rejected without further sorting.

(vi) Moisture content, when limited by the purchaser, as stated on the borrower's purchase order, shall be measured by calibrated electric moisture meter. Calibration of the meter shall include not only the zero settings for the X and Y readings, but also two resistance standards for 12 and 22 percent moisture content.

(vii) Material failing to conform for moisture content may be retested upon request after a recalibration of the instrument. The results of the second test shall govern disposition of the lot.

(viii) Re-examination for any mechanical damage or deterioration and for original acceptance shall be conducted on timber products not treated within 10 days after original inspection.

(2) Crossarms can be purchased only under either of two purchase plans. These plans are the Independent Inspection Plan or Quality Assurance Plans. Under the Independent Inspection Plan, crossarms are to be inspected prior to manufacture, during manufacture, and after treatment. Under a Quality Assurance Plan, crossarms are monitored according to the terms of the quality assurance program acceptable to RUS.

(i) Inspection prior to treatment shall include:

(A) Surface inspection of all ends of all arms. This is usually done on the stacks of arms prior to manufacture. Particular attention shall be paid to defects commonly found in the ends, such as compression wood, red heart and other forms of decay, shakes, splits, through checks, scantiness, honeycomb, and low density, determined by rings per inch (centimeter) and percent of summerwood. Whenever the number of nonconforming arms is found to exceed 0.5 percent of the lot or one arm, whichever is greater, the entire lot shall be rejected for excess number of defective ends. After the producer has removed or marked out the defective material, the arms may be resubmitted for inspection.

(B) Surface inspection of the lengthwise sides performed on a random representative sample. The sample size shall equal 20 percent of a lot size or 200 arms, whichever is smaller. The inspector shall examine side surfaces as they are slowly rotated. When necessary, the rotation may be stopped for closer inspection. Whenever the number of nonconforming arms is found to exceed 2 percent of the sample size, the entire lot shall be rejected. After the producer has removed or marked out

the defective material, the arms may be resubmitted for inspection.

(C) Check of moisture content of the random sample by a calibrated moisture meter.

(D) Check of crossarm dimensions of the random sample measured after surfacing.

(ii) Inspection during manufacture shall consist of:

(A) Checking bolt and insulator pin holes for squareness and excessive splintering;

(B) Checking brands for completeness, location, and legibility; and

(C) Checking arms for conformance.

(iii) Under the Independent Inspection Plan, there shall be a final inspection during and after treatment for preservative retention and penetration and for damage.

(3) Structural glued laminated timber shall be tested and inspected in accordance with AITC 200–83, Inspection Manual. Grade of lumber shall be inspected by a qualified grader for specified quality, and so marked, in accordance with grading rules of the American Lumber Standards. Adhesives used for all structural arms shall meet requirements of ANSI 05.2–83, paragraph 5.2. Melamine urea adhesives shall not be used. End joint spacings and limitations shall be in accordance with ANSI 05.2–83.

(e) *Preservatives.* (1) Creosote shall conform to the requirements of AWPA Standard P1 when analyzed by AWPA Standard Al, sections 2, 3, 4, either 5 or 9, and 6.

(i) Each occasional charge, all material treated in a cylinder at one time, shall be analyzed.

(ii) The first charge and one of every five charges randomly selected in consecutive charges shall be analyzed.

(2) Solutions of waterborne preservatives shall be analyzed for components in accordance with AWPA Standards A2, A9, or A11, and shall meet the requirements of P5 for composition. AWPA A2 shall be used as a referee method.

(3) Pentachlorophenol shall contain not less than 95 percent chlorinated phenols and conform to AWPA Standard P8 in hydrocarbon solvent AWPA P9 Type A.

(4) Copper Naphthenate in hydrocarbon solvent (AWPA P9 Type A) shall contain not less than 6 percent nor more than 8 percent copper in the form of Copper Naphthenate and conform to AWPA Standard P8 when analyzed in accordance with AWPA Standard A5.

(f) *Plant facilities and inspection during treatment.* (1) Manufacturing and treating plant facilities shall conform to AWPA Standard M3, paragraph 3. Pressure plants shall be equipped with recording instruments to register time, pressure, temperature and vacuum during each cycle of treatment. They shall also be equipped with indicating thermometers and pressure and vacuum gauges to check the accuracy of the recorders. Work tanks shall be equipped with a thermometer. Thermal treating vats shall be equipped with a time and temperature recorder and with an indicating thermometer. Temperature recording devices are not mandatory for plants treating exclusively with waterborne preservatives.

(2) Under the Independent Inspection Plan, the inspector shall be present during the treatment procedure, except at times when it may be impractical, such as during late night or early morning treatments. At such times, temperature, pressure, and vacuum data shall be taken from the recording charts.

(3) Recording instruments shall be checked with indicating gauges and thermometers. Inaccuracies shall be referred to the treating company for prompt correction. In the event of an inaccuracy, indicating possible damage to the material, the inspector shall reject the charge.

(g) *Results of treatment.* (1) Poles shall be tested for retention and penetration by means of a calibrated increment borer 0.2 inches (0.51 cm) ± 0.02 inches (0.05 cm) in diameter in accordance with procedures in AWPA Standard M2, paragraph 5.22. Under the Independent Inspection Plan, all treating charges shall be tested for retention and penetration. Plant quality control and independent inspection shall do their analyses separately. Under the Insured Warranty Plan and Quality Assurance Plans, the frequency of testing retention and penetration may vary according to the plan.

(i) Western red and northern white cedars and western larch poles shall be bored at any point of the periphery approximately 6–12 inches (15.24–30.48 cm) above ground line and all other species approximately 1 foot (30.48 cm) above or below the brand.

(ii) Penetration shall be determined in accordance with AWPA Standard A3. Chrome Azurol S and Penta-Check shall be used to determine penetration of copper containing preservatives and penta, respectively.

(iii) *Retention sampling.* (A) When there are 20 or more poles in the treating charge, the retention sample for creosote shall consist of 20 assay zones from southern pine and Douglas-fir poles. All poles in charges with fewer than 20 poles shall be bored once. Charges with less than 15 poles shall be bored once and bored again on a random basis to obtain a minimum of 15 assay zones.

(B) Retention samples shall be taken from 20 poles in charges of 20 or more poles.

(C) Retention samples for Alaska yellow, western red, and northern white cedars shall be comprised of a minimum of 30 assay zones for creosote and waterborne preservatives. For penta charges of fewer than 30 poles, the sample shall contain the assay zone from each pole in the lot.

(D) Retention samples shall be comprised of borings, representative of pole volumes for each class and length in the charge. Further selection and marking of poles of mixed seasoning, volume, and location on the tram shall be made as illustrated in the following table:

Number of Poles	Class/Length	Vol. in cu. ft.	Total Volume	Number of Borings
27	7/30(09.1 m)	232	15	3
26	4/35(10.7 m)	447	29	6
11	5/35(10.7 m)	163	10	2
55*	6/35(10.7 m)	704	46	9
Total		1,546		

*If a portion of these poles were green and some partially seasoned, then the number of borings should reflect the approximate percentage of each.

(iv) When material in a lot consists of fewer pieces than the designated minimum number of samples for assay, additional borings shall be taken so as to make up at least the minimum sample, and in such manner that the sample is representative of the lot of material with respect to any variations in size, seasoning condition, or other features that might affect the results of treatment.

(v) Analyses for preservative retention shall be performed.

(A) Creosote shall be analyzed by AWPA Standard A6.

(B) Penta shall be analyzed by AWPA Standard A5 or A9. Copper pyridine method is required when timber may have been in contact with salt water and for all species native to the Pacific coast region, unless the raw material invoice specifically states that the material either has not been in contact with salt water or has been shown by analysis to have contained no additional chlorides before treating.

(C) Copper Naphthenate shall be analyzed by tests in accordance with AWPA Standards A5 or A9.

(D) Waterborne preservatives shall be analyzed by tests in accordance with AWPA Standards A2, A7, A9, or A11.

(E) Prior to unloading a tram, the inspectors may take their own samples and analyze them concurrently with the quality control designee, but each shall work independently, and quality control data shall be presented before acceptance of the charge.

(vi) *Penetration sampling of poles.* (A) Group A poles consist of poles with a circumference of 37.5 inches (95.25 cm) or less at 6 feet (1.8 m) from butt.

(*1*) Bore 20 Group A poles or 20 percent of the poles, whichever is greater. Accept if 100 percent of the sample conform; otherwise, bore all poles.

(*2*) Re-treat the charge if more than 15 percent of the borings are found to be nonconforming.

(*3*) Re-treat all nonconforming poles if 15 percent or fewer fail the requirement.

(B) Group B poles consist of poles with circumference greater than 37.5 inches (95.25 cm) at 6 feet (1.8 m) from the butt.

(*1*) For Group B poles 50 feet (15.2 m) and shorter, bore each pole and re-treat only those found to be nonconforming, unless more than l5 percent fail; in that case, re-treat the entire lot.

(*2*) For Group B poles longer than 50 feet (15.2 m), bore each pole twice at 90 degrees apart around the pole and accept only those poles conforming to the penetration requirement in both borings. All nonconforming poles may be re-treated only twice.

(vii) All holes (nominal 0.2 of an inch (0.05 cm) diam. bit) shall be promptly filled with treated, tight-fitting wood plugs.

(2) Under the Independent Inspection Plan, all treating charges of crossarms shall be tested for retention and penetration. Plant quality control inspectors and independent inspectors shall do their analyses *independently*. Under the Quality Assurance Plans, the frequency of testing retention and penetration may vary according to the plan.

(i) The penetration and retention sample shall consist of 20 (48 for creosote) outer 6/10 of an inch (1.52 cm) for Douglas-fir and 1 inch (2.54 cm) for Southern Yellow Pine zones from borings taken from any face except the top face at a location as close to the end as possible being at least 3 inches (7.62 cm) from the end of the arm and no closer than 3 inches from the edge of any holes. For laminated material, borings shall be taken from laminates on a random basis.

(ii) Penetration shall be tested by taking not less than 20 borings from 20 crossarms in each charge, determined in accordance with AWPA Standard A3. Chrome Azurol S and Penta-Check shall be used to determine penetration of copper containing preservatives and penta, respectively.

(3) Laminated material shall be checked for any evidence of delamination due to treatment and for the identifying quality stamp of AITC or American Plywood Association (APA).

(4) When x-ray fluorescence (XRF) instruments are used to analyze preservative or retention, Periodic Instrument Checks (PIC) shall be made by the treating plant and any outside inspection agency using the treating plant's instrument or its own. Appendix B of this section outlines a recommended procedure.

(5) At a minimum, treating plants shall perform the PIC weekly and record the results in the instrument's log, which shall be stored with the instrument. Independent inspection agencies shall use their own samples to perform the PIC on treater's instrument once per visit, not to exceed one PIC per week. Inspection agencies shall record their results in the instrument's log and state the date of its latest PIC on all treating reports.

(6) XRF instruments shall be accurate and reliable, and they shall generate reproducible results. Instruments shall have thorough instructions which should include recommendations on drying techniques, equipment, and density calculations. These drying recommendations shall be followed when using these instruments.

(h) *Product acceptance.* Under the Independent Inspection Plan, the inspector shall signify acceptance by marking each piece of accepted material with a clear, legible hammer stamp in one end prior to treatment and in the other end after treatment. The inspector shall personally mark each piece, and shall not delegate this responsibility to another person.

(i) *Charge inspection reports.* (1) Inspection Reports shall cover the following:

(i) The total pieces in the lot, number of and causes for rejection;

(ii) The conditioning of the material prior to treatment;

(iii) The analyses of preservative identified by the analyst's signature or certification;

(iv) The details of treatment; and

(v) The results of treatment. These results shall include the following:

(A) The depth of penetration for retention sample and a summary of all poles rejected for insufficient penetration;

(B) Worksheets for retention analyses, each identified by quality control designee and independent inspector;

(C) The number of pieces offered and rejected, together with the cause(s) for rejection;

(D) The date of latest Periodic Instrument Check.

(2) On each inspection report the independent inspector and the plant quality control designee shall certify, in writing, that the material listed on the report has been inspected before,

during, and after treatment, and that the preservative used was analyzed in accordance with the requirements of this section.

(3) Each inspector or inspection agency shall retain for a period of 1 year a copy or transcript of each report of inspection, together with laboratory worksheets covering retention by assay and preservative analyses for the purchaser, and on request shall furnish a copy or transcript of any of these reports to the Director, Electric Staff Division, Rural Utilities Service, Washington, DC 20250–1500.

(j) *Charge numbers on re-treat poles.* The letter ''R'' shall be added to the original charge number in the butts of all poles that are re-treated for insufficient penetration or retention of preservative. All poles that fail to meet treatment requirements after two retreatments shall be permanently rejected.

(k) *Safety provisions.* Poles intended for RUS borrowers shall not be inspected when, in the opinion of the inspector, unsafe conditions are present.

APPENDIX A TO § 1728.202—RECOMMENDED INSPECTORS' QUALIFICATIONS

(a) Inspection agencies should see that inspectors assigned to the inspection of timber products and treatment for RUS borrowers are competent and experienced.

(b) *Recommended experience.* In general, any of the following examples are recommended as minimum qualifying experience before a new inspector may be permitted to inspect timber products for RUS borrowers:

(1) Three years' experience as an inspector of timber and the preservative treatment of timber.

(2) Three years' experience in timber treating plant quality control work.

(3) Under the direct supervision of an experienced, well-qualified inspector, who has performed the following:

(i) Inspected at least 2,500 poles and/or crossarms ''in the white.''

(ii) Checked preservative penetration results on at least 500 poles and crossarms.

(iii) Made at least 35 wood assays for preservative retention.

(iv) Made at least 25 analyses of each type preservative used on material the person is assigned to inspect.

(v) In both (b)(1) and (b)(2) of this appendix A, the experience should be not less than that required in (b)(3)(i), (b)(3)(ii), (b)(3)(iii), and (b)(3)(iv).

(4) Inspectors experienced in the inspections of one product, such as poles, should not be qualified to inspect another product, such as crossarms, until the above experience is gained.

(5) The inspector should be especially well informed in wood preservation and the operation of a timber treating plant, and be competent in preservative analysis and other laboratory work.

(6) In all cases, an inspector should be thoroughly instructed in the application of RUS specifications and the standards pertaining thereto before being permitted to independently inspect timber products and the treatments applied to them. Knowledge of these specifications and standards, as well as the inspector's proficiency, may be checked routinely by members of the RUS staff.

APPENDIX B TO § 1728.202—PERIODIC INSTRUMENT CHECK X-RAY FLUORESCENCE

(a) *General.* The following sample calibration standards and procedures may be used in lieu of comparison with analysis by wet ash or lime ignition methods.

(b) *Penta.* Until such time as AWPA approves calibration standards for penta, the following method should be used to run a salt water solution to measure Cl (chloride).

(1) *Standard Solution.* Dry approximately 15 grams of reagent grade NaCl at 105°C for 1 hour. Weigh 10.00 grams into a tared beaker. Add distilled water until the total weight is 100.00 grams. Stir until completely dissolved. This will give a 10 percent weight to weight solution of NaCl.

(2) *Baseline Check.* (i) Insure that the instrument is in good agreement with lime ignition.

(ii) Record any user correction factors.

(iii) Stabilize and standardize the instrument.

(iv) Run the salt solution five times using the PENTA-OIL calibration mode.

(v) Record the average and standard deviation of the values for percent penta. The average value will now be considered the nominal value.

(3) *Periodic Instrument Check.* Run the salt solution two times and average the results. If the value is more than ± 5 percent of the nominal value, the instrument needs further calibration, following manufacturer's recommendation.

(c) *Waterborne preservatives.* Treaters and inspection agencies should purchase AWPA Committee P-5 Standard Reference Materials to analyze on their instruments. Reference materials should be in the retention range of the material being produced at the plants. If the value is more than ± 5 percent of the nominal value, the instrument needs further calibration. AWPA Committee P-5 Standard Reference Materials may be purchased from:

American Wood Preservers' Association, P.O. Box 286, Woodstock, Maryland 21163, Phone: (410) 456–3169.

[58 FR 41406, Aug. 3, 1993]

PART 1730—ELECTRIC SYSTEM OPERATIONS AND MAINTENANCE [RESERVED]

PART 1735—GENERAL POLICIES, TYPES OF LOANS, LOAN REQUIREMENTS—TELECOMMUNICATIONS PROGRAM

Subpart A—General

Sec.
1735.1 General statement.
1735.2 Definitions.
1735.3 Availability of forms.
1735.4—1735.9 [Reserved]

Subpart B—Loan Purposes and Basic Policies

1735.10 General.
1735.11 Area coverage.
1735.12 Nonduplication.
1735.13 Location of facilities and service for nonrural subscribers.
1735.14 Borrower eligibility.
1735.15 Civil rights.
1735.16 Minimum loan amount.
1735.17 Facilities financed.
1735.18 Additional equity.
1735.19 Mergers and consolidations.
1735.20 Acquisitions.
1735.21 Refinancing loans.
1735.22 Loan security.
1735.23—1735.29 [Reserved]

Subpart C—Types of Loans

1735.30 Hardship loans.
1735.31 RUS cost-of-money and RTB loans.
1735.32 Guaranteed loans.
1735.33 Variable interest rate loans.
1735.34—1735.39 [Reserved]

Subpart D—Terms of Loans

1735.40 General.
1735.41 Notes.
1735.42 [Reserved]
1735.43 Payments on loans.
1735.44 Prepayment premiums.
1735.45 Extension of payments.
1735.46 Loan security documents.
1735.47 Rescissions of loans.
1735.48—1735.49 [Reserved]

Subpart E—Basic Requirements for Loan Approval

1735.50 Administrative findings.
1735.51 Required findings.
1735.52 Findings required for particular loan purposes.
1735.53—1735.59 [Reserved]

Subpart F—Mortgage Controls on Acquisitions and Mergers

1735.60 Specific provisions.
1735.61 Approval criteria.
1735.62 Approval of acquisitions and mergers.
1735.63—1735.69 [Reserved]

Subpart G—Acquisitions Involving Loan Funds

1735.70 Use of loan funds.
1735.71 Nonrural areas.
1735.72 Acquisition agreements.
1735.73 Loan design.
1735.74 Submission of data.
1735.75 Interim financing.
1735.76 Acquisition of affiliates.
1735.77 Release of loan funds, requisitions, advances.
1735.78—1735.79 [Reserved]

Subpart H—Acquisitions or Mergers Not Involving Additional Loan Funds

1735.80 Submission of data.
1735.81—1735.89 [Reserved]

Subpart I—Requirements for All Acquisitions and Mergers

1735.90 Preliminary approvals.
1735.91 Location of facilities.
1735.92 Accounting considerations.
1735.93 Notes.
1735.94 Final approval and closing procedure.
1735.95 Unadvanced loan funds.
1735.96—1735.99 [Reserved]

Subpart J—Toll Line Acquisitions

1735.100 Use of loan funds.
1735.101 With nonloan funds.

AUTHORITY: 7 U.S.C. 901 *et seq.*, 1921 *et seq.*; Pub. L. 103–354, 108 Stat. 3178 (7 U.S.C. 6941 *et seq.*).

EDITORIAL NOTE: Nomenclature changes to part 1735 appear at 55 FR 39397, Sept. 27, 1990.

Subpart A—General

§1735.1 General statement.

(a) Subparts A through E of this part set forth the general policies, types of loans and loan requirements under the Telephone loan program.

(b) The standard RUS security documents (see 7 CFR 1744 subpart D or

RUS Bulletins 320–4, 320–22, 321–2, 322–2, 323–1, 326–1) contain provisions regarding acquisitions, mergers, and consolidations. Subparts F through J of this part implement those provisions by setting forth the policies, procedures, and requirements for telephone borrowers planning to acquire existing telephone lines, facilities, or systems with RUS loan or other funds, or planning to merge or consolidate with another system. This part supersedes all RUS Bulletins that are in conflict with it.

(c) Subparts F through J of this part also detail RUS's requirements with respect to mergers and acquisitions involving RUS loan funds.

[55 FR 39395, Sept. 27, 1990; 55 FR 41170, Oct. 9, 1990]

§ 1735.2 Definitions.

As used in this part:

Access line means a transmission path between user terminal equipment and a switching center that is used for local exchange service. For multiparty service, the number of access lines equals the number of lines/paths terminating on the mainframe of the switching center.

Acquisition means the purchase of another telephone system, lines, or facilities whether by acquiring telephone plant in service or majority stock interest of one or more organizations.

Acquisition agreement means the agreement, including a sales agreement, between the seller and purchaser outlining the terms and conditions of the acquisition. Acquisition agreements also include any other agreements, such as options and subsidiary agreements relating to terms of the transaction.

Administrator means the Administrator of RUS.

Advance of funds means the transferring of funds by RUS to the borrower's construction fund.

Appropriated means funds appropriated based on subsidy.

Affiliate means an organization that directly, or indirectly through one or more intermediaries, controls or is controlled by, or is under common control with, the borrower.

Borrower means any organization which has an outstanding loan made or guaranteed by RUS, or which is seeking such financing.

Cash distribution means investments, guarantees, extensions of credit, advances, loans, non-affiliated company joint ventures, affiliated company investments, and dividend and capital credit distributions. Not included in this definition are qualified investments (see 7 CFR part 1744, subpart D).

Composite economic life as applied to facilities financed by loan funds means the weighted (by dollar amount of each class of facility in the loan) average economic life of all classes of facilities in the loan.

Consolidation means the combination of two or more borrower or nonborrower organizations, pursuant to state law, into a new successor organization that takes over the assets and assumes the liabilities of those organizations.

Construction fund means the RUS Construction Account required by § 2.4 of the standard loan contract into which all RUS loan funds are advanced.

Depreciation means the loss not restored by current maintenance, incurred in connection with the consumption or prospective retirement of telecommunications plant in the course of service from causes which are known to be in current operation, against which the company is not protected by insurance, and the effect of which can be forecast to a reasonable approach to accuracy.

Economic life as applied to facilities financed by loan funds, means the number of years resulting from dividing 100 percent by the depreciation rate (expressed as a percent) approved by the regulatory body with jurisdiction over the telephone service provided by the borrower for the class of facility involved or, if no approved rate exists, by the median depreciation rate expressed as a percent as published by RUS in its Statistical Report, Rural Telephone Borrowers for all RUS and RTB borrowers for that class of facility.

Feasibility study means the pro forma financial analysis performed by RUS to determine the economic feasibility of a loan. See 7 CFR part 1737.

Forecast period means the time period beginning on the date (base date) of the borrower's balance sheet used in preparing the feasibility study and ending

on a date equal to the base date plus the number of years estimated in the feasibility study for completion of the project. Feasibility projections are usually for 5 years, see § 1737.70(a) of this chapter. For example, the forecast period for a loan based on a December 31, 1990 balance sheet and having a 5-year estimated project completion time is the period from December 31, 1990 to December 31, 1995.

Funded reserve means a separate asset account, approved by RUS, consisting of any or all of the following:

(1) Federal government securities purchased in the name of the borrower;

(2) Other securities issued by an institution whose senior unsecured debt obligations are rated in any of the top three categories by a nationally recognized rating organization; or

(3) Cash.

GFR means the RUS general field representative.

Guaranteed loan means a loan guaranteed by RUS under section 306 of the RE Act bearing interest at a rate agreed to by the borrower and the lender.

Hardship loan means a loan made by RUS under section 305(d)(1) of the RE Act bearing interest at a rate of 5 percent per year.

Interim financing means funding for a project which RUS has acknowledged could be included in a loan, should said loan be approved, but for which RUS funds have not yet been made available. See 7 CFR part 1737, subpart E.

Loan means any loan made or guaranteed by RUS.

Loan contract means the loan agreement between RUS and the borrower, including all amendments thereto.

Loan funds means funds provided by RUS through direct or guaranteed loans.

Majority noteholders means the holder or holders of a majority in principal amount of the notes outstanding at a particular time.

Merger means the combining, pursuant to state law, of one or more borrower or nonborrower organizations into an existing survivor organization that takes over the assets and assumes the liabilities of the merged organizations. While the terms merger and consolidation have different meanings, for the purpose of this part, ''mergers'' also include consolidations as defined above. Furthermore, ''mergers'' also include acquisitions where the acquired systems, lines, or facilities and the acquiring system are operated as one system.

Mortgage means the security agreement between RUS and the borrower, including any amendments and supplements thereto.

Net worth means the sum of the balances of the following accounts of the borrower:

Account names	Number
(1) Capital stock	4510
(2) Additional paid-in capital	4520
(3) Treasury stock	4530
(4) Other capital	4540
(5) Retained earnings	4550

Note: For nonprofit organizations, owners' equity is shown in subaccounts of 4540 and 4550. All references regarding account numbers are to the Uniform System of Accounts (47 CFR part 32).

RUS cost-of-money loan means a loan made under section 305(d)(2) of the RE Act bearing an interest rate as determined under § 1735.31(c). RUS cost-of-money loans are made concurrently with RTB loans.

RTB loan means a loan made by the Rural Telephone Bank (RTB) under section 408 of the RE Act bearing an interest rate as determined under 7 CFR 1610.10. RTB loans are made concurrently with RUS cost-of-money loans.

Rural area means any area of the United States, its territories and insular possessions (including any area within the Federated States of Micronesia, the Republic of the Marshall Islands, and the Republic of Palau) not included within the boundaries of any incorporated or unincorporated city, village or borough having a population exceeding 5,000 inhabitants. The population figure is obtained from the most recent data available, such as from the Bureau of the Census and Rand McNally and Company. For purposes of the ''rural area'' definition, the character of an area is determined as of a time the initial loan for the system is made.

Subscriber means the same as access line.

Survivor means (1) the successor corporation formed by the consolidation

of one or more borrowers, (2) the corporation remaining after completion of a merger involving one or more borrowers, and (3) a corporation assuming all or a portion of an RUS loan in connection with an acquisition.

Telephone service means any communication service for the transmission or reception of voice, data, sounds, signals, pictures, writing, or signs of all kinds by wire, fiber, radio, light, or other visual or electromagnetic means and includes all telephone lines, facilities and systems to render such service. It does not mean:

(1) Message telegram service;

(2) Community antenna television system services or facilities other than those intended exclusively for educational purposes; or

(3) Radio broadcasting services or facilities within the meaning of section 3(o) of the Communications Act of 1934, as amended.

Times Interest Earned Ratio (TIER) means the ratio of a borrower's net income (after taxes) plus interest expense, all divided by interest expense. For the purpose of this calculation, all amounts will be annual figures and interest expense will include only interest on debt with a maturity greater than one year.

Total assets means the sum of the balances of the following accounts of the borrower:

Account names	Number
(1) Current assets	1100s through 1300s.
(2) Noncurrent Assets	1400s through 1500s.
(3) Total telecommunications plant.	2001 through 2007.
(4) Less: Accumulated depreciation.	3100 through 3300s.
(5) Less: Accumulated amortization.	3400 through 3600s.

Note: All references regarding account numbers are to the Uniform System of Accounts (47 CFR part 32).

[54 FR 13351, Apr. 3, 1989; 54 FR 16194, Apr. 21, 1989. Redesignated at 55 FR 39395, Sept. 27, 1990, as amended at 56 FR 26596, June 10, 1991; 58 FR 66253, Dec. 20, 1993; 62 FR 46869, Sept. 5, 1997]

§ 1735.3 Availability of forms.

Single copies of RUS forms and publications cited in this part are available from Program Support Regulatory Analysis, Rural Utilities Service, STOP 1522, 1400 Independence Ave., SW., Washington, DC 20250–1522. These RUS forms and publications may be reproduced. The terms ''RUS form'', ''RUS standard form'', and ''RUS specification'' have the same meanings as the terms ''REA form'' ''REA standard form'', and ''REA specification'', respectively, unless otherwise indicated.

[54 FR 13351, Apr. 3, 1989. Redesignated at 55 FR 39395, Sept. 27, 1990, and amended at 59 FR 66441, Dec. 27, 1994; 62 FR 46870, Sept. 5, 1997]

§§ 1735.4—1735.9 [Reserved]

Subpart B—Loan Purposes and Basic Policies

SOURCE: 54 FR 13351, Apr. 3, 1989, unless otherwise noted. Redesignated at 55 FR 39395, Sept. 27, 1990.

§ 1735.10 General.

(a) The Rural Utilities Service (RUS) makes loans to furnish and improve telephone service in rural areas. Loans made or guaranteed by the Administrator of RUS will be made in conformance with the Rural Electrification Act of 1936 (RE Act), as amended (7 U.S.C. 901 *et seq.*), and 7 CFR chapter XVII. RUS provides borrowers specialized and technical accounting, engineering, and other managerial assistance in the construction and operation of their facilities when necessary to aid the development of rural telephone service and to protect loan security.

(b) RUS will not make hardship loans, RUS cost-of-money loans, or RTB loans for any purposes that, in RUS's opinion, are inconsistent with the borrower achieving the requirements stated in the State's telecommunications modernization plan within the time frame stated in the plan (see 7 CFR part 1751, subpart B), unless RUS has determined that achieving the requirements as stated in such plan is not technically or economically feasible.

(c) RUS will not deny or reduce a loan or an advance of loan funds based on a borrower's level of general funds.

(d) No fees or charges are assessed for any type of loan or guarantee provided by RUS or the Rural Telephone Bank (RTB).

(e) The Administrator may use consultants funded by the borrower for financial, legal, engineering, and other technical advice in connection with the review of a borrower's loan application.

[58 FR 66253, Dec. 20, 1993, as amended at 59 FR 17464, Apr. 13, 1994]

§ 1735.11 Area coverage.

Borrowers must make adequate telephone service available to the widest practical number of rural subscribers during the life of the loan. Both the nature of the service area and the cost per subscriber must be fully considered. The borrower must seek to provide service to all interested potential subscribers in the service area. Borrowers are not required to extend service in situations where the costs would be exorbitant. The loan contract shall contain appropriate provisions to effect this requirement. See 7 CFR 1737.11(a), Preapplication Determinations: Area to be Served.

§ 1735.12 Nonduplication.

(a) In states having a state regulatory body with authority to regulate telephone service and to require certificates of convenience and necessity, the borrower must obtain such a certificate before RUS will make a loan. Facilities or services not specifically covered by such certificate will be subject to the provisions of § 1735.12(b).

(b) In states where there is no such regulatory body, a loan will not be made unless the Administrator determines that no duplication of lines, facilities, or systems already providing reasonably adequate services shall result from such a loan.

(c) RUS shall consider the following criteria in determining whether service is reasonably adequate:

(1) Availability of telephone service to commercial establishments, professional offices, essential community services, and residences in the community.

(2) Reasonable audibility and clarity of sound transmission and reception.

(3) Absence of frequent interruptions.

(4) Adequacy of line circuits and central office facilities to permit reasonably frequent subscriber use without unreasonable delay.

(5) Availability of connections with other exchanges and with the interexchange facilities of the Nation.

(6) Any other criteria the Administrator determines to be applicable to the particular case.

§ 1735.13 Location of facilities and service for nonrural subscribers.

(a) When it is determined by the Administrator to be necessary in order to furnish or improve telephone service in rural areas, loans may be made for the improvement, expansion, construction, acquisition, and operation of telephone lines, facilities, or systems without regard to their geographical location.

(b) To the greatest extent practical, loans are limited to providing telephone facilities that serve subscribers in rural areas. In order to furnish and improve service to rural subscribers it may at times be necessary to provide loan funds to finance telephone facilities which (1) will also serve nonrural subscribers, or (2) are located in nonrural areas. Loans may be approved to finance such facilities if the Administrator determines, on a case-by-case basis, that (i) the primary purpose of the loan is to provide service to rural areas and (ii) the financing of facilities for nonrural subscribers is necessary and incidental to furnishing or improving telephone service in rural areas.

(c) Loan funds may be approved for facilities to serve nonrural subscribers only if (1) the principal purpose of the loan is to furnish and improve rural service and (2) the use of loan funds to serve nonrural subscribers is necessary and incidental to the principal purpose of the loan. The following are examples of purposes for which such loans may be made (such loans are not limited to these examples):

(1) In the case of construction of a new system, if the loan would not be economically feasible and self-liquidating unless the nonrural as well as the rural portions of the telephone service area are included in the proposed system, the loan may include funds for both portions.

(2) Where the acquisition of an existing system located in and serving a nonrural area is necessary to serve as the nucleus of an expanded system to furnish area coverage service in rural

areas, the loan may include funds to finance the acquisition.

(3) When a system is being converted to modern service for rural subscribers, the loan may include funds for the conversion of the nonrural facilities, if the rural service will be improved as a result of such nonrural improvements and it is impractical to finance and serve the nonrural and rural areas separately.

(4) A loan may include funds to serve nonrural subscribers located in community centers frequently called by the rural subscribers if the construction to serve such nonrural subscribers will be incidental to, and contribute substantially to, the provision of adequate service for the rural subscribers.

(d) RUS may also approve financing for facilities to serve nonrural areas if, at the time financing was first approved by RUS:

(1) The nonrural area had a population of 1,500 or less when first financed by RUS and that financing was approved prior to November 1, 1993; or

(2) The nonrural area had a population of 5,000 or less when first financed by RUS and that financing was approved on or after November 1, 1993.

[54 FR 13351, Apr. 3, 1989. Redesignated at 55 FR 39395, Sept. 27, 1990, as amended at 58 FR 66253, Dec. 20, 1993]

§ 1735.14 Borrower eligibility.

(a) RUS makes loans to:

(1) Entities providing, or who may hereafter provide, telephone service in rural areas;

(2) Public bodies providing telephone service in rural areas as of October 28, 1949; and

(3) Cooperative, nonprofit, limited dividend or mutual associations.

(b) RUS does not make loans to individuals.

(c) RUS gives preference to those borrowers (including initial loan applicants) already providing telephone service in rural areas, and to cooperative, nonprofit, limited dividend, or mutual associations. To be eligible for a loan, a borrower must provide or propose to provide the basic local exchange telephone service needs of rural areas, and it must be incorporated.

[58 FR 66253, Dec. 20, 1993]

§ 1735.15 Civil rights.

Borrowers are required to comply with certain regulations on nondiscrimination and equal employment opportunity. See RUS Bulletin 320–19 and RUS Bulletin 320–15, respectively.

§ 1735.16 Minimum loan amount.

Recognizing plant costs, the borrower's cost of system design, and RUS's administrative costs, RUS will not consider applications for loans of less than $50,000.

§ 1735.17 Facilities financed.

(a) RUS makes hardship and guaranteed loans to finance the improvement, expansion, construction, acquisition, and operation of systems or facilities (including station apparatus owned by the borrower, headquarters facilities, and vehicles not used primarily in construction) to furnish and improve telephone service in rural areas, except as noted under paragraph (c) of this section.

(b) RUS makes concurrent RUS cost-of-money and RTB loans to finance the improvement, expansion, construction, and acquisition of systems or facilities (excluding station apparatus owned by the borrower, headquarters facilities, and vehicles not used primarily in construction) to furnish and improve telephone service in rural areas, except as noted under paragraph (c) of this section.

(c) RUS will not make any type of loan to finance the following items:

(1) Station apparatus (including PBX and key systems) not owned by the borrower and any associated inside wiring;

(2) Certain duplicative facilities, see § 1735.12;

(3) Facilities to serve subscribers outside the local exchange service area of the borrower unless those facilities are necessary to furnishing or improving telecommunications service within the borrower's service areas;

(4) Facilities to provide service other than 1-party; and

(5) System designs or facilities to provide service that cannot withstand or are not designed to minimize damage caused by storms and other natural catastrophes, including, but not limited to hurricanes, floods, tornadoes,

mudslides, lightning, windstorms, hail, fire, and smoke, unless an alternate design or facility for modern telecommunications is more economically or technically feasible. Economic and technical feasibility will be determined using total long range economic costs and risk analysis.

(d) If an unadvanced loan, or portion thereof, is rescinded, a new loan shall not be made for the same purposes as in the rescinded loan, except as provided in § 1735.47.

[54 FR 13351, Apr. 3, 1989. Redesignated at 55 FR 39395, Sept. 27, 1990, and amended at 58 FR 66253, Dec. 20, 1993; 62 FR 46870, Sept. 5, 1997]

§ 1735.18 Additional equity.

If determined by the Administrator to be necessary for loan security, a borrower applying for an initial loan shall increase its net worth as a percentage of assets to the highest level recorded, not to exceed 40 percent, at the end of any calendar quarter in the period beginning 2 years prior to the receipt by RUS of the borrower's loan application form (RUS Form 490). This restoration to the higher level of net worth shall take place before RUS will determine the feasibility of the proposed loan.

§ 1735.19 Mergers and consolidations.

RUS does not make loans for the sole purpose of merging or consolidating telephone organizations. After a merger or consolidation, RUS will consider making loans to the telephone system to finance the improvement or extension of telephone service in rural areas. See RUS Bulletins 320–4, 321–2, 325–1, and 326–1.

§ 1735.20 Acquisitions.

(a) RUS finances the acquisition by a borrower of another system, lines, or facilities only when the acquisition is necessary and incidental to furnishing or improving rural telephone service. See 7 CFR 1735.13.

(b) RUS determines the amount it will lend for each acquisition. If the acquisition price exceeds this amount, the borrower shall provide the remainder.

(c) For additional policies on acquisitions, see subpart F through J of this part.

[54 FR 13351, Apr. 3, 1989. Redesignated at 55 FR 39395, Sept. 27, 1990, and amended at 58 FR 66253, Dec. 20, 1993]

§ 1735.21 Refinancing loans.

(a) Hardship loans and guaranteed loans may include funds to refinance outstanding indebtedness of corporations furnishing telephone service when such refinancing is necessary and incidental to furnishing or improving telephone service in rural areas. Refinancing may not constitute more than 40 percent of the loan.

(b) Loans for refinancing are not made solely to enable borrowers to obtain a lower interest rate or a longer amortization period. RUS requires borrowers, to the greatest extent possible, to liquidate outstanding indebtedness through the use of nonloan funds.

(c) If deemed necessary by RUS to provide itself with adequate security, RUS will consider loans for refinancing outstanding indebtedness secured by a lien on property offered as security for the loan, if the property covered by the lien is integral to the operation of the system.

(d) RUS will consider loans for refinancing when the borrower would otherwise be unable to meet payments on both the outstanding indebtedness and the loan as they become due.

(e) RUS may consider loans for refinancing in other situations.

[54 FR 13351, Apr. 3, 1989. Redesignated at 55 FR 39395, Sept. 27, 1990, and amended at 58 FR 66254, Dec. 20, 1993]

§ 1735.22 Loan security.

(a) RUS makes loans only if, in the judgment of the Administrator, the security therefor is reasonably adequate and the loan will be repaid within the time agreed. See 7 CFR 1735.18 and 7 CFR 1735.51.

(b) RUS generally requires that borrowers provide it with a first lien on all of the borrower's property. See 7 CFR 1735.46.

(c) In the case of loans that include the financing of telephone facilities that do not constitute self-contained operating systems or units (such as lines switched by other systems), the

borrower shall, in addition to the mortgage lien on all of the borrower's telephone facilities, furnish adequate assurance, in the form of contractual or other security arrangements, that continuous and efficient telephone service will be rendered.

(d) The borrower shall provide RUS with a satisfactory Area Coverage Survey. See 7 CFR 1737.30 and 1737.31.

(e) RUS makes loans only if the borrower's entire system, including the facilities to be constructed with the proceeds of the loan, is economically feasible, as determined by RUS.

(f) For purposes of determining compliance with TIER requirements, unless a borrower whose existing mortgage contains TIER maintenance requirements notifies RUS in writing differently, RUS will apply the requirements described in paragraph (g) of this section to the borrower regardless of the provisions of the borrower's existing mortgage.

(g) For loans approved after October 6, 1997 loan contracts and mortgages covering hardship loans, RUS cost-of-money loans, RTB loans, and guaranteed loans will contain a provision requiring the borrower to maintain a TIER of at least 1.0 during the Forecast Period. At the end of the Forecast Period, the borrower shall be required to maintain, at a minimum, a TIER at least equal to the projected TIER determined by the feasibility study prepared in connection with the loan, but at least 1.0 and not greater than 1.5.

(h) Nothing in this section shall affect any rights of supplemental lenders under the RUS mortgage, or other creditors of the borrower, to limit a borrower's TIER requirement to a level above that established in paragraph (g) of this section.

(i) A borrower will not be required to raise its TIER as a condition for receiving a loan. Additional financial, investment, and managerial controls appear in the loan contract and mortgage required by RUS.

[54 FR 13351, Apr. 3, 1989. Redesignated at 55 FR 39395, Sept. 27, 1990, as amended at 56 FR 26597, June 10, 1991; 58 FR 66254, Dec. 20, 1993; 62 FR 46870, Sept. 5, 1997]

§§ 1735.23—1735.29 [Reserved]

Subpart C—Types of Loans

§ 1735.30 Hardship loans.

(a) RUS makes hardship loans under section 305(d)(1) of the RE Act. These loans bear interest at a rate of 5 percent per year. To qualify for a hardship loan on or after November 1, 1993, a borrower must meet each of the following requirements:

(1) The average number of proposed subscribers per mile of line in the service area of the borrower is not more than 4;

(2) The borrower has a projected TIER (including the proposed loan or loans) of at least 1.0, but not greater than 3.0, as determined by the feasibility study prepared in connection with the loan, see 7 CFR part 1737, subpart H; and

(3) The Administrator has approved and the borrower is participating in a telecommunications modernization plan for the state, see 7 CFR part 1751, subpart B.

(b)(1) Hardship loan funds shall not be used to finance facilities located in any exchange of the borrower that has:

(i) More than 1,000 existing subscribers; and

(ii) An average number of proposed subscribers per mile of line greater than 17.

(2) Those facilities may, however, be financed with concurrent RUS cost-of-money and RTB loans or a guaranteed loan if the borrower is eligible for such financing.

(c) The Administrator may waive the TIER requirement in paragraph (a)(2) of this section in any case in which the Administrator determines, and sets forth the reasons therefor in writing, that the requirement would prevent emergency restoration of the telephone system of the borrower or result in severe hardship to the borrower.

(d) In order to fairly and equitably approve hardship loans to ensure that borrowers most in need receive hardship financing first, RUS will prioritize for approval all applications qualifying for hardship loans. The criteria in this paragraph will be used by the Administrator to rank, from high to low, applications that have been determined to

qualify for hardship financing. Subject to the availability of funds, applications receiving the highest number of points will be selected for loan approval each fiscal year quarter (the application with the most points will be approved first, the second highest next, etc.) The following ranking methodology and loan approval conditions apply:

(1) *Ranking criteria.* Borrowers will receive points based on each of the following criteria applicable to the proposed loan:

(i) *Forecasted Average Number of Subscribers Per Mile of Line (Density).* The number of points assigned to a borrower will be the value 4 less the value of the borrower's forecasted density as determined by the Feasibility Study prepared in connection with the loan (i.e., if a borrower's forecasted system density is 2.75, the borrower would receive 4 less 2.75 points, or 1.25 points).

(ii) *Forecasted TIER.* The number of points assigned to a borrower will be the value 3 less the value of the borrower's forecasted TIER as determined by the Feasibility Study prepared in connection with the loan (i.e., if a borrower's forecasted TIER is 1.75, the borrower would receive 3 less 1.75 points, or 1.25 points).

(iii) *Unserved Territories.* Borrowers will receive points for loan funds included in the application to provide telephone service in areas previously unserved because it was considered cost prohibitive (for example, high costs resulting from the terrain, remoteness, or system design). In particular, borrowers will receive one tenth of a point, up to a maximum of 2 points, for each subscriber added (in connection with the loan) that currently resides in an unserved area.

(iv) *Plant Modernization.* Borrowers will receive 1 point for loan funds included in the application for at least one of the following basic plant modernizations or system improvements:

(A) Providing digital switching capabilities where those capabilities did not previously exist; and/or

(B) Upgrading to equal access; and/or

(C) Conversion of service to 1-party making an entire exchange all 1-party service.

(v) *Distance Learning and Medical Link Facilities.* Borrowers will receive 2 points for loan funds included in the application for the purpose of providing distance learning or medical link transmission facilities. If loan funds are included for both distance learning and medical link transmission facilities, borrowers will receive 3 points. (See 7 CFR part 1703 for definitions of distance learning and medical link.)

(vi) *Time Factor.* If a borrower's application has been ranked but cannot be approved due to the lack of funds available for loans in that quarter, the borrower will receive .25 points for each quarter in which its loan is pending but not approved.

(2) *Ranking and approval of loans.* Eligible loan applications (satisfying the requirements of 7 CFR 1737.21) will be ranked during the quarter in which the application is received. If an application is received in which insufficient time remains in that quarter to process and rank the application, it will be ranked in the next quarter. At the beginning of the quarter and as soon as practical, RUS will approve all eligible hardship loans ranked in the previous quarter to the extent loan funds are available, beginning with the borrowers that received the highest number of points and working downwards. Any qualified application that is not approved due to the lack of funds will be carried forward to the next quarter and ranked with all other eligible hardship loan applications in that quarter. Upon completion of the ranking and approval of loans, all borrowers will be informed in writing of the status of their loan applications.

(e) *Optimal use of funds.* RUS retains the right to limit the size of hardship loans made to individual borrowers in order to more equitably distribute the amount of hardship funds appropriated among the greatest number of qualified borrowers. Generally, no more than 10 percent of the funds appropriated in any fiscal year may be loaned to a single borrower. In addition, RUS retains the right to approve loans to borrowers that are ranked lower in the priority system, or without regard to when the application was received and ranked, if it is necessary to:

(1) Expedite restoration of service outages due to natural disasters; or

(2) Maximize the use of all available hardship funds appropriated for loans in that fiscal year.

(f) On request of any borrower who is eligible for a hardship loan for which funds are not available, the borrower shall be considered to have applied for concurrent RUS cost-of-money and RTB loans under sections 305 and 408, respectively, of the RE Act.

(g) Hardship loans may be made simultaneously with concurrent RUS cost-of-money and RTB loans or guaranteed loans.

[58 FR 66254, Dec. 20, 1993]

§ 1735.31 RUS cost-of-money and RTB loans.

(a) RUS makes cost-of-money loans, under section 305(d)(2) of the RE Act, concurrently with RTB loans made under section 408 of the RE Act. To qualify for concurrent RUS cost-of-money and RTB loans on or after November 1, 1993, a borrower must meet each of the following requirements:

(1) The average number of proposed subscribers per mile of line in the service area of the borrower is not more than 15, or the borrower has a projected TIER (including the proposed loans) of at least 1.0, but not greater than 5.0, as determined by the feasibility study prepared in connection with the loans, see 7 CFR part 1737, subpart H; and

(2) The Administrator has approved and the borrower is participating in a telecommunications modernization plan for the state, see 7 CFR part 1751, subpart B.

(b) The loan amounts from each program (RUS cost-of-money and RTB, including amounts for class B stock) will be proportionate to the total amount of funds appropriated for the fiscal year for RUS cost-of-money loans and RTB loans. To determine the RUS cost-of-money portion, the total loan amount will be multiplied by the ratio of RUS cost-of-money funds appropriated for the fiscal year to the sum of RUS cost-of-money and RTB funds appropriated for the fiscal year in which the loan is approved. The same method would be used to calculate the RTB portion (see 7 CFR 1610.6(b)). If during the fiscal year the amount of funds appropriated changes, the ratio will be adjusted accordingly and applied only to those loans approved afterwards.

(c) The RUS cost-of-money loan shall bear interest as described in paragraphs (c)(1) and (c)(2) of this section (the actual rate of interest on the RTB loan shall be determined as provided in 7 CFR 1610.10):

(1) Each advance of funds included in RUS cost-of-money loans shall bear interest at a rate (the ''Cost of Money Interest Rate'') equal to the current cost of money to the Federal Government for loans of a similar maturity. The Cost of Money Rate is determined when the funds are advanced to the borrower but cannot exceed 7 percent per year.

(2) RUS shall use the Federal Treasury Statistical Release (the ''Statistical Release'') issued by the United States Treasury to determine the interest rate for each advance of RUS cost-of-money loan funds. Generally, the Statistical Release is issued each Monday to cover the preceding week. RUS shall determine the Cost of Money Interest Rate as follows:

(i) Each advance shall bear the interest rate stated in the applicable Statistical Release for Treasury constant maturities with a maturity similar to that of the advance.

(ii) RUS shall determine the interest rate for an advance bearing a maturity other than those stated in the applicable Statistical Release by straight-line interpolation between the next higher and next lower stated maturities.

(iii) The first Statistical Release published after the date of an advance shall apply to that advance.

(iv) If the interest rate determined under paragraph (c)(2)(i) or (c)(2)(ii) of this section is higher than 7 percent, then the advance shall bear interest at the rate of 7 percent per year.

(v) Advances with maturities greater than 30 years shall bear interest at the rate stated in the applicable Statistical Release for 30-year maturities.

(vi) RUS may use an alternative method to determine the Cost of Money Interest Rate if the Treasury ceases to issue the Statistical Release or changes its format or frequency of issue so that it is no longer appropriate for use in the manner described in paragraph (c)(2) of this section. In this

eventuality, RUS shall immediately notify all borrowers with unadvanced RUS cost-of-money loan funds. RUS may, with the borrower's consent, determine the Cost of Money Interest Rate on a case-by-case basis for subsequent advances of RUS cost-of-money loan funds but may also decide, in its discretion, that it is unable to continue advancing funds until an alternative method is in effect.

(vii) Refer to §1735.43(a) for additional information on maturities of RUS loans.

(viii) RUS shall provide borrowers with prompt written confirmation of the Cost of Money Interest Rate borne by each advance of funds included in a RUS cost-of-money loan.

(d) Generally, no more than 10 percent of lending authority from appropriations in any fiscal year for RUS cost-of-money and RTB loans may be loaned to a single borrower. RUS will publish by notice in the FEDERAL REGISTER the dollar limit that may be loaned to a single borrower in that particular fiscal year based on approved RUS and RTB lending authority.

(e) On request of any borrower who is eligible for concurrent RUS cost-of-money and RTB loans for which funds are not available, the borrower shall be considered to have applied for a loan guarantee under section 306 of the RE Act.

(f) Concurrent RUS cost-of-money and RTB loans may be made simultaneously with hardship loans or guaranteed loans.

[58 FR 66255, Dec. 20, 1993, as amended at 62 FR 46870, Sept. 5, 1997]

§1735.32 Guaranteed loans.

(a) *General.* Loan guarantees under this section will be considered for only those borrowers specifically requesting a guarantee. Borrowers may also specify that the loan to be guaranteed shall be made by the Federal Financing Bank (FFB). RUS provides loan guarantees pursuant to section 306 of the RE Act. Guaranteed loans may be made simultaneously with hardship loans or concurrent RUS cost-of-money and RTB loans. No fees or charges are assessed for any guarantee of a loan provided by RUS. In view of the Government's guarantee, RUS generally obtains a first lien on all assets of the borrower (see §1735.46).

(b) *Requirements.* To qualify for a guaranteed loan, a borrower must have a projected TIER (including the proposed loan or loans) of at least 1.2 as determined by the feasibility study prepared in connection with the loan. In addition, a borrower must meet all requirements set forth in the regulations applicable to a loan made by RUS with the exception that it is not required to participate in a state telecommunications modernization plan and is not subject to a subscriber per mile eligibility requirement, as provided in §1735.31(a).

(c) *Net worth requirements.* RUS generally requires that borrowers seeking guaranteed loans have a net worth in excess of 20 percent of assets. RUS will, however, consider loan guarantees for borrowers with a net worth less than 20 percent.

(d) *Full amount guaranteed.* Loans are guaranteed in the full amount of principal and interest. Because of the Government's full faith and credit 100 percent guarantee of these loans, only RUS obtains a mortgage on the borrower's assets.

(e) *Federal Register notice.* After RUS has reviewed an application and determined that it shall consider guaranteeing a loan for the proposed project and if the borrower has not specified that the loan be made from the FFB, RUS shall publish a notice in the FEDERAL REGISTER. The Notice will include a description of the proposed project, the estimated total cost, the estimated amount of the guaranteed loan, a statement that the Federal Financing Bank (FFB) has a standing loan commitment agreement with RUS, and the name and address of the borrower to which financing proposals may be submitted.

(f) *Qualified lenders.* RUS considers loan guarantees on a case by case basis for loans made by the FFB and any other legally organized lending agency or by a combination of lenders that the Administrator determines to be qualified to make, hold and service the loan. ''Legally organized lending agency'' and ''lender'' include commercial banks, trust companies, mortgage banking firms, insurance companies,

and any other institutional investor authorized by law to loan money. The borrower is responsible for evaluating all proposals received from lenders other than FFB. The borrower furnishes RUS with a report on the evaluations and its choice of proposals. However, at the request of the borrower, the guaranteed loan shall be made by the FFB.

(g) *Interest rate.* Guaranteed loans shall bear interest at the rate agreed upon by the borrower and lender. Guaranteed FFB loans shall be at a rate of interest that is not more than the rate of interest applicable to other similar loans then being made or purchased by FFB.

(h) *Condition of guarantee.* RUS will not guarantee a loan if the income from the loan or the income from obligations issued by the holder of the loan, when the obligations are created by the loan, is excluded from gross income for the purpose of chapter I of the Internal Revenue Code of 1954.

(i) *Contract of guarantee.* If RUS is satisfied with the engineering and economic feasibility of the project and approves the borrower's choice of proposal, subject to the submission of satisfactory financing documents and to the satisfaction of other pertinent terms and conditions, RUS will prepare a contract of guarantee to be executed by the borrower, the lender, and RUS within a specified time. The lender, or its representative, shall have the right to examine the borrower's application and supporting data submitted to RUS in support of its request for financial assistance.

(j) *Loan servicing.* The contract of guarantee will require that arrangements satisfactory to RUS be made to service the loan. Required servicing by the lender will include:

(1) Determining that all prerequisites to each advance of loan funds by the lender under the terms of the contract of guarantee, all financing documents, and all related security instruments have been fulfilled. Such determinations may be met by obtaining RUS approval of each advance.

(2) Billing and collecting loan payments from the borrower.

(3) Notifying the Administrator promptly of any default in the payment of principal and interest on the loan and submitting a report, as soon as possible thereafter, setting forth its views as to the reasons for the default, how long it expects the borrower will be in default, and what corrective actions the borrower states it is taking to achieve a current debt service position.

(4) Notifying the Administrator of any known violations or defaults by the borrower under the lending agreement, contract of guarantee, or related security instruments, or conditions of which the lender is aware which might lead to nonpayment, violation, or other default.

(k) *Payments under the contract of guarantee.* Upon receipt of the notification required in §1735.32(j)(3) of this section, RUS will pay the lender the amount in default with interest to the date of payment. When RUS has made a payment under a contract of guarantee, it will establish in its accounts the amount of the payment as due and payable from the borrower, with interest at the rate of interest specified in the lending agreement. RUS will work with the borrower and the lender in an effort to eliminate the borrower's default as soon as possible. RUS may also proceed with other remedies available under its security instruments.

(l) *Pledging of contract of guarantee.* Subject to applicable law, RUS will consider, on a case by case basis, permitting pledging of the contract of guarantee in order to facilitate the obtaining of funds by the lending agency to make the guaranteed loan.

[54 FR 13351, Apr. 3, 1989; 54 FR 16194, Apr. 21, 1989. Redesignated at 55 FR 39395, Sept. 27, 1990, as amended at 56 FR 26597, June 10, 1991; 58 FR 66255, Dec. 20, 1993; 62 FR 46870, Sept. 5, 1997]

§ 1735.33 Variable interest rate loans.

After June 10, 1991, and prior to November 1, 1993, RUS made certain variable rate loans at interest rates less than 5 percent but not less than 2 percent. For those borrowers that received variable rate loans, this section describes the method by which interest rates are adjusted. The interest rate used in determining feasibility is the rate charged to the borrower until the end of the Forecast Period for that

loan. At the end of the Forecast Period, the interest rate for the loan may be annually adjusted by the Administrator upward to a rate not greater than 5 percent, or downward to a rate not less than the rate determined in the feasibility study on which the loan was based, based on the borrower's ability to pay debt service and maintain a minimum TIER of 1.0. Downward and upward adjustments will be rounded down to the nearest one-half or whole percent. To make this adjustment, projections set forth in the loan feasibility study will be revised annually by RUS (beginning within four months after the end of the Forecast Period) to reflect updated revenue and expense factors based on the borrower's current operating condition. Any such adjustment will be effective on July 1 of the year in which the adjustment was determined. If the Administrator determines that the borrower is capable of meeting the minimum TIER requirements of §1735.22(f) at a loan interest rate of 5 percent on a loan made as described in this section, then the loan interest rate shall be fixed, for the remainder of the loan repayment period, at the standard interest rate of 5 percent.

[62 FR 46870, Sept. 5, 1997]

§§1735.34—1735.39 [Reserved]

Subpart D—Terms of Loans

SOURCE: 54 FR 13351, Apr. 3, 1989, unless otherwise noted. Redesignated at 55 FR 39395, Sept. 27, 1990.

§1735.40 General.

Terms and conditions of loans are set forth in a mortgage, note, and loan contract. Provisions of the mortgage and loan contract are implemented by provisions in RUS Bulletins and Regulations. Forms of the mortgage, note, and loan contract can be obtained from RUS.

§1735.41 Notes.

Loans are represented by one or more notes. Interest accrues only on funds advanced. There are no loan commitment fees or charges. See RUS Bulletin 320–12 for additional information. This CFR part supersedes those portions of RUS Bulletin 320–12 ''Loan Payments and Statements'' with which it is in conflict.

§1735.42 [Reserved]

§1735.43 Payments on loans.

(a) Except as described in this paragraph (a), RUS loans approved after October 6, 1997 must be repaid with interest within a period that, rounded to the nearest whole year, equals the expected composite economic life of the facilities to be financed, as calculated by RUS; expected composite economic life means the depreciated life plus three years. The expected composite economic life shall be based on the depreciation rates for the facilities financed by the loan. In states where the borrower must obtain state regulatory commission approval of depreciation rates, the depreciation rates used shall be the rates currently approved by the state commission or rates for which the borrower has received state commission approval. In cases where a state regulatory commission does not approve depreciation rates, the expected composite economic life shall be based on the most recent median depreciation rates published by RUS for all borrowers (see 7 CFR 1737.70). Borrowers may request a repayment period that is longer or shorter than the expected composite economic life of the facilities financed. If the Administrator determines that a repayment period based on the expected composite economic life of the facilities financed is likely to cause the borrower to experience hardship, the Administrator may agree to approve a period longer than requested. A shorter period may be approved as long as the Administrator determines that the loan remains feasible.

(b) Borrowers with RTB loans approved after October 6, 1997 with a maturity that exceeds the expected composite economic life of the facilities to be financed by the loan by a period of more than three years, release of funds included in the loan shall be conditioned upon the borrower establishing and maintaining, pursuant to a plan approved by RUS, a funded reserve in such an amount that the balance of the reserve plus the value of the facilities

less depreciation shall at all times be at least equal to the remaining principal payments on the loan. Funding of the reserve must begin within one year of approval of release of funds and must continue regularly over the expected composite economic life of the facilities financed.

(c) Borrowers that have demonstrated to the satisfaction of the Administrator an inability to maintain the funded reserve or net plant to secured debt ratio requirements, if any, contained in their mortgage, may elect to replace notes with an original maturity that exceeded the composite economic life of the facilities financed with notes bearing a shorter maturity approximating the expected composite economic life of the facilities financed, if this will result in a shorter maturity for the loan. The principal balance of the notes (hereinafter in this section called the ''refunding notes'') issued to refund and substitute for the original notes would be the unpaid principal balance of the original notes. The refunding notes would mature at a date no later than the remaining economic life of the facilities financed by the loan, plus three years, as determined by the original feasibility study prepared in connection with the loan. Interest on the original note must continue to be paid through the closing date. All other payment terms, including the rate of interest on the refunding notes, would remain unchanged. Disposition of funds in the funded reserve will be determined by RUS at the closing date. RUS will notify the borrower in writing of the amendment of loan payment requirements and the terms and conditions thereof.

(d) A borrower qualifying under paragraph (c) of this section shall not be required to pay a prepayment premium on such portion of the payments under its new notes as exceeds the payments required under the notes being replaced.

(e) To apply for refunding notes, borrowers must send to the Area Office the following:

(1) A certified copy of a board resolution requesting an amendment of loan payment requirements and that certain notes be replaced;

(2) If applicable, evidence of approval by the regulatory body with jurisdiction over the telecommunications service provided by the borrower to issue refunding notes; and

(3) Such other documents as may be required by the RUS.

(f) Principal and interest will be repaid in accordance with the terms of the notes. Generally, interest is payable each month as it accrues. Principal payments on each note generally are scheduled to begin 2 years after the date of the note. After this deferral period, interest and principal payments on all funds advanced during this 2-year period are scheduled in equal monthly installments. Principal payments on funds advanced 2 years or more after the date of the note will begin with the first billing after the advance. The interest and principal payments on each of these advances will be scheduled in equal monthly installments. This CFR part supersedes those portions of RUS Bulletin 320–12, ''Loan Payments and Statements'' with which it is in conflict.

[56 FR 26598, June 10, 1991, as amended at 62 FR 46871, Sept. 5, 1997]

§ 1735.44 Prepayment premiums.

The loan documents normally provide that RUS insured loans may be repaid in full at any time without prepayment premiums. Depending upon the lender, there may be prepayment premiums on loans guaranteed by RUS. See 7 CFR part 1610 for prepayment premiums on RTB loans. See RUS Bulletin 320–12 for additional information. This CFR part supersedes those portions of RUS Bulletin 320–12, ''Loan Payments and Statements'', with which it is in conflict.

§ 1735.45 Extension of payments.

RUS may extend the time of payment of principal or interest on a loan. Under section 12 of the Rural Electrification Act, as amended, this extension may be up to 5 years after such payment is due. Under section 236 of the Disaster Relief Act of 1970 (Pub. L. 91–606) payment may be deferred by the Secretary of Agriculture as long as necessary in disaster situations so long as the final maturity date is not later than 40 years after the date of the loan.

See RUS Bulletin 320–2 for additional information.

§ 1735.46 Loan security documents.

(a) Loans are to be repaid according to their terms. RUS generally obtains a first lien on all assets of the borrower. This lien shall be in the form of a mortgage by the borrower to the Government or a deed of trust made by and between the borrower and a trustee, satisfactory to the Administrator, together with such security agreements, financing statements, or other security documents as RUS may deem necessary in a particular case. Where a borrower is unable by reason of pre-existing encumbrances, or otherwise, to furnish a first mortgage lien on its entire system the Administrator may, if he determines such security to be reasonably adequate and the form and nature thereof otherwise appropriate, accept other forms of security. See RUS Bulletins 320–4, 320–22, 321–2, 322–2, 323–1, and 326–1 for details. See 7 CFR part 1744, subpart B for information on lien accommodations and subordinations.

(b) Loan security documents of borrowers with loans approved after October 6, 1997 will provide limits on allowable cash distributions in any calendar year as follows:

(1) No more than 25 percent of the prior calendar year's net earnings or margins if the borrower's net worth is at least 1 percent of its total assets after the distribution is made;

(2) No more than 50 percent of the prior calendar year's net earnings or margins if the borrower's net worth is at least 20 percent of its total assets after the distribution is made;

(3) No more than 75 percent of the prior calendar year's net earnings or margins if the borrower's net worth is at least 30 percent of its total assets after the distribution is made; or

(4) No limit on distributions if the borrower's net worth is at least 40 percent of its total assets after the distribution is made.

(c) Borrowers that have not received a loan after October 6, 1997 may request the Administrator to apply these requirements to them. Borrowers may request in writing that RUS substitute the new requirements described in paragraphs (b)(1) through (b)(4) of this section. Upon request by the borrower, the provisions of the borrower's loan documents restricting cash distributions or investments shall not be enforced to the extent that such provisions are inconsistent with this section.

(d) Rural development investments meeting the criteria set forth in 7 CFR part 1744, subpart D, will not be counted against a borrower's allowable cash distributions in any calendar year (7 U.S.C. 926).

(e) References to a borrower's mortgage in this section include deeds of trust and any other loan document applying the same requirements to a borrower.

(f) This section does not limit the rights of any parties to the mortgage other than RUS or RTB.

[54 FR 13351, Apr. 3, 1989. Redesignated at 55 FR 39395, Sept. 27, 1990, as amended at 59 FR 29537, June 8, 1994; 62 FR 46871, Sept. 5, 1997]

§ 1735.47 Rescissions of loans.

(a) Rescission of a loan may be requested by a borrower at any time. To rescind a loan, the borrower must demonstrate to RUS that:

(1) The purposes of the loan being rescinded have been completed;

(2) Sufficient funds are available from sources other than RUS, RTB or FFB to complete the purposes of the loan being rescinded; or

(3) The purposes of the loan are no longer required to extend or improve telephone service in rural areas.

(b) Borrowers submitting loan applications containing purposes previously covered by a loan that has been rescinded shall include in the application an explanation, satisfactory to RUS, of the change of conditions since the rescission that re-establishes the need for those purposes.

(c) RUS shall not initiate the rescission of a loan unless all of the purposes for which telephone loans have been made to the borrower under the Act have been accomplished with funds provided under the Act.

[56 FR 26598, June 10, 1991]

§§ 1735.48—1735.49 [Reserved]

Subpart E—Basic Requirements For Loan Approval

SOURCE: 54 FR 13351, Apr. 3, 1989, unless otherwise noted. Redesignated at 55 FR 39395, Sept. 27, 1990.

§ 1735.50 Administrative findings.

The RE Act requires that the Administrator make certain findings to approve a telephone loan or loan guarantee. The borrower shall provide the evidence determined by the Administrator to be necessary to make these findings. Details on the information required to support these findings are included in 7 CFR part 1737.

§ 1735.51 Required findings.

(a) *Feasibility of and security for the Loan.* The borrower shall provide RUS with satisfactory evidence to enable the Administrator to determine that the security for the loan is reasonably adequate and the loan will be repaid on time. This finding is based on the following factors:

(1) Self-liquidation of the loan within the loan amortization period; this requires that there be sufficient revenues from the borrower's system, in excess of operating expenditures (including maintenance and replacement), to repay the loan with interest.

(2) Reasonable assurance of achieving the telephone market projections upon which the loan is based.

(3) Economic feasibility (based on projected revenues, expenses, net income, maximum debt service, and rate of return on investment) for the proposed system using local service rate schedules appropriate for the area served.

(4) Impact of the proposed loan and construction on the ratio of the borrower's secured debt to assets.

(5) Projected growth in the borrower's equity.

(6) Satisfactory experience and reputation of the system's principal owners and manager.

(7) A first lien on the borrower's total system or other adequate security.

(8) Fair market value of the borrower's assets as represented in its financial reports to RUS.

(9) Appropriate financial and managerial controls included in the loan documents.

(10) Other factors determined to be relevant by RUS.

(b) *Area coverage.* The borrower shall provide RUS with satisfactory evidence to enable the Administrator to determine that adequate telephone service will be made available to the widest practical number of rural users during the life of the loan.

(c) *Nonduplication or certificate requirement.* The borrower shall provide RUS with satisfactory evidence to enable the Administrator to determine that no duplication of service shall result from a particular loan for those borrowers not required by the state regulatory commission to have a certificate of convenience and necessity (or its equivalent). For borrowers required to have a certificate of convenience and necessity, all portions of the existing and proposed system must be covered by the certificate.

[54 FR 13351, Apr. 3, 1989. Redesignated at 55 FR 39395, Sept. 27, 1990, as amended at 56 FR 26598, June 10, 1991]

§ 1735.52 Findings required for particular loan purposes.

(a) *Refinancing.* For loans that include funds to refinance outstanding indebtedness of the borrower, the borrower shall provide RUS with satisfactory evidence to enable the Administrator to determine that the inclusion in the loan of such funds shall be necessary and incidental to furnishing or improving telephone service in rural areas. See 7 CFR 1735.21.

(b) *Facilities for nonrural areas.* Whenever a borrower proposes to use loan funds for the improvement, expansion, construction, or acquisition of telephone facilities within or for nonrural areas, the borrower shall provide RUS with satisfactory evidence to enable the Administrator to determine that such funds shall be necessary and incidental to furnishing or improving telephone service in rural areas.

§§ 1735.53—1735.59 [Reserved]

Subpart F—Mortgage Controls on Acquisitions and Mergers

SOURCE: 54 FR 14626, Apr. 12, 1989, unless otherwise noted. Redesignated at 55 FR 39395, Sept. 27, 1990.

§ 1735.60 Specific provisions.

(a) The standard form of RUS mortgage contains certain provisions concerning mergers and acquisitions:

(1) Article II, section 4(a) requires the borrower to obtain the written approval of the majority noteholders before taking any action to reorganize, or to consolidate with or merge into any other corporation.

(2) Article II, section 4(b), if made applicable, provides certain exceptions to the requirements of section 4(a).

(b) Similar provisions are contained in other forms of documents executed by borrowers that have not entered into the standard form of mortgage.

(c) Mortgages and loan contracts may contain other provisions concerning mergers and acquisitions.

[54 FR 14626, Apr. 12, 1989. Redesignated at 55 FR 39395, Sept. 27, 1990, as amended at 62 FR 46871, Sept. 5, 1997]

§ 1735.61 Approval criteria.

(a) If a borrower is required by the terms of its mortgage or loan contract to obtain RUS approval of a merger or acquisition, the borrower shall request RUS approval and shall provide RUS with such data as RUS may request.

(b) If loan funds are requested, the borrower shall comply with subpart G of this part. If no additional loan funds are involved, the borrower shall comply with subpart H of this part.

(c) In considering whether to approve the request, RUS will take into account, among other matters:

(1) Whether the operation, management, and the economic and loan-repayment feasibility characteristics of the proposed system are satisfactory;

(2) Whether the merger or acquisition may result in any relinquishment, impairment, or waiver of a right or power of the Government;

(3) Whether the proposed merger or acquisition is in the best interests of the Government as note holder; and

(4) Whether the proposed purchase price and terms of an acquisition are reasonable, regardless of the source of funds used to pay for the purchase. RUS will consider the purchase price unreasonable if, in RUS's opinion, it will endanger financial feasibility.

§ 1735.62 Approval of acquisitions and mergers.

(a) If a proposal is unsatisfactory to RUS, then RUS shall inform the borrower in writing of those features it considers objectionable and, as appropriate, recommend corrective action.

(b) If a proposal is satisfactory to RUS, then RUS shall inform the borrower in writing of its approval and any conditions of such approval. Among the conditions of approval are the following:

(1) RUS shall require a compensating benefit in return for any relinquishment, impairment, or waiver of its rights or powers.

(2) If the survivor is an affiliate of another company, RUS shall require any investments in, advances to, accounts receivable from, and accounts payable to the affiliated company contrary to mortgage provisions shall be eliminated in a manner satisfactory to the Administrator.

(3) RUS requires that the borrower agree not to extend credit to, perform services for, or receive services from any affiliated company unless specifically authorized in writing by the Administrator or pursuant to contracts satisfactory in form and substance to the Administrator.

(4) RUS may require the borrower to execute additional mortgages, loan agreements, and associated documentation.

§§ 1735.63—1735.69 [Reserved]

Subpart G—Acquisitions Involving Loan Funds

SOURCE: 54 FR 14626, Apr. 12, 1989, unless otherwise noted. Redesignated at 55 FR 39395, Sept. 27, 1990.

§ 1735.70 Use of loan funds.

(a) See 7 CFR part 1735 and 1737 for RUS's general loan policies and requirements.

(b) RUS will finance an acquisition by a borrower only when the acquisition is necessary and incidental to furnishing or improving rural telephone service and the service area is eligible for RUS assistance.

(c) RUS does not make loans for the sole purpose of merging or consolidating telephone organizations. After a merger or consolidation, RUS will consider making loans to the telephone system to finance the improvement or extension of telephone service in rural areas.

(d) Generally, RUS will not make a loan for the acquisition of an existing borrower unless, in addition to all other requirements, such acquisition will improve the likelihood of repayment of an outstanding RUS loan and all outstanding balances of the previous RUS loans are paid in full.

(e) In determining the amount it will lend for each acquisition, RUS shall place a valuation on all telephone facilities that are to be acquired with loan funds. RUS may consider fair market value, the original cost less depreciation of the facilities, income generating potential, any improvement in the financial strength of the borrower as a result of the acquisition, and any other factors deemed relevant by RUS to determine the reasonableness of the acquisition price and the amount of loan funds RUS will provide for an acquisition. RUS shall not consider the acquisition price reasonable or approve a loan if, in the Administrator's opinion, the acquisition price will endanger financial feasibility. If the acquisition price exceeds the amount RUS will lend, the borrower provides the remainder.

(f) When a borrower intends to request RUS loan funds for an acquisition, it shall present a proposal in writing to the Area Office as soon as possible. The borrower must either obtain RUS approval prior to making any binding commitments with the seller or make the commitments subject to RUS's approval. Failure to comply with these requirements will disqualify the borrower from obtaining an RUS loan for the acquisition unless the Administrator determines there were extenuating circumstances.

§ 1735.71 Nonrural areas.

Loan funds may be approved for the acquisition and improvement of facilities to serve nonrural subscribers only if the principal purpose of the loan is to furnish and improve rural service and only if the use of loan funds to serve nonrural subscribers is necessary and incidental to the principal purpose of the loan. For example, when the acquisition of an existing system located in and serving a nonrural area is necessary to serve as the nucleus of an expanded system to furnish area coverage service in rural areas, the loan may include funds to finance the acquisition. Approval for the use of loan funds in these circumstances shall be made only on a case by case basis by the Administrator.

§ 1735.72 Acquisition agreements.

When borrowers are seeking RUS financing, acquisition agreements between the borrower and the seller must be in form and substance satisfactory to RUS and shall be expressly conditioned on approval of the agreement by RUS and on obtaining an RUS loan. Normally, the acquisition agreement will not be approved by RUS until the loan has been approved.

§ 1735.73 Loan design.

When loan funds are requested for an acquisition, details of the proposed acquisition shall be included in the Loan Design. See 7 CFR part 1737.

§ 1735.74 Submission of data.

(a) RUS will not approve any acquisition, other than of toll facilities (see subpart J of this part), financed in whole or in part with loan funds until the borrower submits the following data to the GFR:

(1) For any nonborrowers involved, their most recent balance sheets, operating statements, detail of plant accounts, reports to the state commission, and audits, if available.

(2) Completed RUS Form 507, ''Report on Telephone Acquisition,'' which provides system data, including the type

of purchase and purchase price, a system description, and data by exchange. See §1735.3 for information on obtaining copies of this form.

(3) A map (such as a road map) showing county lines, the boundaries of the proposed acquisition and the borrower's existing service territory, and the names of other telephone companies serving adjoining areas.

(4) A brief statement of the plans for incorporating the acquired facilities into the borrower's existing system.

(5) The number of subscribers currently receiving service in the area to be acquired and the number of new subscribers that will be served over the next 5 years as a result of the acquisition.

(6) The proposed purchase price.

(7) Two copies of any options, bills of sale, or deeds, and four copies of any acquisition agreements. All of these documents are subject to RUS approval. If the acquisition agreement is approved by RUS, two copies of it shall be returned to the borrower.

(8) An appraisal by the borrower's consulting engineer or other qualified person of the physical plant to be acquired. The appraisal shall include the following:

(i) Inspection of each central office, noting the age and condition of the switch and associated equipment, and the extent and quality of maintenance of the equipment and premises.

(ii) Inspection of the outside plant, noting the general age and condition of cable and wire, poles and related hardware, pedestals, and subscriber drops. Any joint use or ownership shall be explained.

(iii) Inspection of miscellaneous items such as commercial office facilities, vehicles, furniture, tools and work equipment, and materials and supplies in stock, noting age and condition.

(iv) Inspection of all buildings and other structures (such as radio towers), noting age and condition.

(v) Detailed description of all real estate including the present market value that local real estate dealers, bankers, insurance agents, etc., place on the property.

(vi) Any widely accepted method, approved by RUS, may be used to estimate the condition of the facilities in paragraphs (a)(8)(i) through (a)(8)(iv) of this section. The ''percent condition'' method is recommended, but is not required.

(9) Copies of deeds to real estate to be acquired, with an explanation of the proposed use of the land.

(10) Copies of leases to be acquired.

(11) Copies of any existing mortgages with parties other than RUS, indentures, deeds of trust, or other security documents or financing agreements relating to the property to be acquired and any contracts or other rights or obligations to be assumed as part of the acquisition.

(12) A list of all counties in which the proposed system will have facilities.

(13) If the borrower is a cooperative-type organization, a description of its plans for taking subscribers in as members, membership fees, equity payments required because of the acquisition, and extent of membership support.

(14) A certification, signed by the president of the borrower, that the borrower is participating in the State's telecommunications modernization plan (for information concerning the plan, see 7 CFR part 1751, subpart B). This certification is not required if the borrower is seeking a guaranteed loan.

(15) Any other data deemed necessary by the Administrator for an evaluation of the acquisition.

(b) For stock acquisitions, the borrower shall submit the following in addition to the items listed in (a) of this section:

(1) A list of all stockholders of the company to be acquired and the number of shares each owns.

(2) Guarantees and indemnifications to be obtained from the sellers of the stock.

(Approved by the Office of Management and Budget under control number 0572–0084)

[54 FR 14626, Apr. 12, 1989. Redesignated at 55 FR 39395, Sept. 27, 1990; 58 FR 66256, Dec. 20, 1993]

§1735.75 Interim financing.

(a) A borrower may submit a written request for RUS approval of interim financing if it is necessary to close an acquisition before the loan to finance the acquisition is approved. Loan funds

shall not be used to reimburse acquisition costs unless RUS has granted approval of interim financing prior to the closing of the acquisition.

(b) RUS will approve interim financing of acquisitions only in cases where loan funds cannot be made available in time for the closing.

(c) RUS will not approve interim financing unless the following information is acceptable:

(1) A written request for approval of interim financing, including a brief description of the acquisition, an explanation of the urgency of proceeding with the acquisition, and the source of funds to be used.

(2) A completed RUS Form 490, ''Application for Telephone Loan or Loan Guarantee.'' See 7 CFR part 1737.

(3) The portions of the Loan Design that cover the proposed acquisition, including cost estimates and information on any investments in nonrural areas. See 7 CFR 1737.

(4) The information required in § 1735.74 (a)(1) through (a)(8), (a)(14) and (b)(1).

(5) Any other data deemed necessary by the Administrator to approve the interim financing of the acquisition.

(d) Furthermore, RUS will not approve interim financing if, in RUS's judgment, the proposed acquisition will not qualify for RUS financing or the proposed interim financing presents unacceptable loan security risks to RUS.

(e) Because RUS approval of interim financing is not a commitment to make a loan, RUS will not approve interim financing unless the borrower is prepared to assume responsibility for financing all obligations incurred.

(f) If the borrower plans to proceed with the closing after receiving RUS approval of interim financing, it must first receive preliminary approval from RUS. See § 1735.90

(g) See 7 CFR part 1737 for regulations on interim financing for construction.

(h) See 7 CFR part 1744, subpart B for conditions under which RUS will provide shared first lien and/or a lien accommodation for non-RUS lenders.

§ 1735.76 Acquisition of affiliates.

A borrower shall not use RUS loan funds to acquire any stock or any telephone plant of an affiliate.

[54 FR 14626, Apr. 12, 1989. Redesignated at 55 FR 39395, Sept. 27, 1990, as amended at 62 FR 46871, Sept. 5, 1997]

§ 1735.77 Release of loan funds, requisitions, advances.

(a) RUS will not approve the advance of loan funds until the borrower has fulfilled all loan contract provisions to the extent deemed necessary by RUS.

(b) The first advance of loan funds pursuant to the loan contract normally shall provide funds needed for the acquisition. Unless the borrower has received approval of interim financing, it must submit the requisition in time for the advance to be made by the closing date.

(c) After the borrower has closed the acquisition, it shall furnish RUS all documents necessary to demonstrate to RUS's satisfaction that the transaction has been closed.

(d) Advances for improvements or expansion of the acquired facilities will not be approved until RUS has determined that the transaction has been closed and the borrower has obtained satisfactory title to the acquired facilities.

(e) See 7 CFR part 1737 (or RUS Bulletin 320–4) for additional requirements for releases of loan funds and 7 CFR part 1744, subpart C for additional requirements for requisitions and advances.

§§ 1735.78—1735.79 [Reserved]

Subpart H—Acquisitions or Mergers Not Involving Additional Loan Funds

§ 1735.80 Submission of data.

When a borrower is not requesting loan funds for an acquisition or merger, the borrower shall first notify RUS and submit for review by RUS the documents and information listed in (a) through (l) of this section required by RUS.

(a) For any nonborrowers involved, their most recent balance sheets, operating statements, detail of plant accounts, reports to the state commission, and audits, if available.

(b) Completed RUS Form 507, ''Report on Telephone Acquisition.''

(c) A map (such as a road map) showing county lines, the boundaries of the proposed acquisition and the borrower's existing service territory, and the names of other telephone companies serving adjoining areas.

(d) A brief statement of the plans for incorporating the acquired facilities into the borrower's existing system.

(e) The number of subscribers currently receiving service in the areas involved in the acquisition or merger and the number of new subscribers that will be served over the next 5 years as a result of the acquisition or merger.

(f) Copies of deeds of real estate to be acquired, with an explanation of the proposed use of the land.

(g) Copies of security documents of any other lenders involved and any contracts or other rights of obligations to be assumed by the survivor.

(h) A list of all counties in which the proposed system will have facilities.

(i) If Article II, section 4(b) of the standard mortgage has not been made applicable, plans for operating the unified system.

(j) In the case of a merger, the proposed articles of merger that are to be used.

(k) In the case of an acquisition, the proposed purchase price, plus two copies of any options, bills of sale, or deeds, and two copies of any acquisition agreements. All of these documents are subject to RUS approval. If the acquisition agreement is approved by RUS, two copies of it shall be returned to the borrower.

(l) Any other data deemed necessary by the Administrator for an evaluation of the acquisition or merger.

(Approved by the Office of Management and Budget under control number 0572–0084)

[54 FR 14626, Apr. 12, 1989. Redesignated at 55 FR 39395, Sept. 27, 1990]

§§ 1735.81—1735.89 [Reserved]

Subpart I—Requirements for All Acquisitions and Mergers

SOURCE: 54 FR 14626, Apr. 12, 1989, unless otherwise noted. Redesignated at 55 FR 39395, Sept. 27, 1990.

§ 1735.90 Preliminary approvals.

(a) In cases where the borrower's schedule for completion of the proposed action leaves insufficient time for RUS to prepare and process the required documentation, including new mortgages and replacement notes, the borrower may request RUS to give preliminary approval to the acquisition or merger. However, the borrower may not obtain additional loan funds until the documentation is completed to RUS's satisfaction.

(b) Consideration of preliminary approvals generally will not be practicable in cases in which compensating benefits are required.

(c) RUS will not give preliminary approval when the lien of the mortgage on after-acquired property may be affected.

(d) Before RUS will grant preliminary approval, the borrower shall submit:

(1) Merger or acquisition documents required by state law;

(2) Acquisition agreements covering the transaction;

(3) Any required franchises, licenses, and permits;

(4) All required regulatory body approvals;

(5) All required corporate actions;

(6) Leases, contracts, and evidence of titles to be assigned to the purchaser; and

(7) The latest audited financial statements for any nonborrowers involved.

(e) If the information in (d) of this section is acceptable to RUS, the borrower may proceed with the closing.

(Approved by the Office of Management and Budget under control number 0572–0084)

§ 1735.91 Location of facilities.

Telephone facilities to be acquired must be located so that they can be efficiently operated by the borrower and

provide adequate security for the RUS loan.

§ 1735.92 Accounting considerations.

(a) Proper accounting shall be applied to all acquisitions and mergers, as required by the regulatory commission having jurisdiction, or in the absence of such a commission, as required by RUS based on Generally Accepted Accounting Principles or other accounting conventions as deemed necessary by RUS.

(b) If RUS determines that the plant accounts are not properly depreciated, the borrower should adjust its depreciation rates. Depending upon the characteristics of the case, commission jurisdiction and requirements, and similar factors, one of the following actions shall be taken:

(1) In states where commission approval of depreciation rates is required, a covenant shall be included in the loan contract that requires the borrower to:

(i) Have the consulting engineer make an original cost less depreciation inventory and appraisal of retained plant as part of the final inventory, and

(ii) Request commission approval of adjustments to its records on the basis of this inventory.

(2) In states where commission approval is not required, informal discussions between RUS and the borrower may be undertaken to reach satisfactory voluntary adjustments. If this does not resolve the situation to RUS's satisfaction, a covenant similar to that in paragraph (b)(1)(i) of this section shall be included in the loan contract and the borrower shall agree to submit evidence satisfactory to the Administrator that it has adjusted its records on the basis of the inventory.

§ 1735.93 Notes.

Substitute notes may be required in the case of an acquisition or merger, regardless of the source of funds.

§ 1735.94 Final approval and closing procedure.

(a) Legal documents relating to the acquisition or merger, including copies of required franchises, commission orders, permits, licenses, leases, title evidence, corporate proceedings, and contracts to be assigned to the purchaser shall be forwarded to the Area Office prior to closing.

(b) The Administrator will not give final approval to any acquisition or merger until all RUS requirements relating to the transactions are satisfied.

(c) Following the Administrator's final approval of the proposal, the Area Office shall inform the borrower in writing of the necessary legal and other actions required for the advance of loan funds to finance the acquisition, including the submission, in form and substance satisfactory to the Administrator, of (1) all information and documents necessary to demonstrate that the transaction has been completed, and (2) all loan contracts, notes, mortgages, and related documents and materials required by RUS.

(d) Deeds reflecting the change in ownership, executed bills of sale, and opinions of counsel shall be forwarded to the Area Office following closing.

(e) RUS will not advance loan funds to furnish or improve service in the acquired or merged areas until the Administrator has given final approval and the transaction has been closed. RUS may, however, advance funds if it determines that loan security will not be jeopardized.

(f) At the discretion of RUS, a GFR may be present at the closing to assist the borrower and protect the interests of RUS. Under certain circumstances the closing may take place prior to RUS granting final approval for the transaction and the execution of amended loan security documents.

§ 1735.95 Unadvanced loan funds.

(a) The unadvanced loan funds of a borrower that will not be a survivor of an acquisition or merger shall be advanced only to the survivor and only under the following circumstances.

(1) If the funds are to be used for purposes approved in prior loans, the funds shall be advanced after the effective date of the proposed action only when all loan contract prerequisites have been met and documents have been submitted in form and substance satisfactory to the Administrator.

(2) If the funds are to be used for new purposes, then in addition to the requirements in (a)(1) of this section, RUS must also approve the change in purpose.

(b) No loan or other money in the construction fund shall be used to finance facilities outside areas to be served by projects approved by RUS.

§§1735.96—1735.99 [Reserved]

Subpart J—Toll Line Acquisitions

§ 1735.100 Use of loan funds.

An acquisition of toll line facilities financed with loan funds must be necessary and incidental, as determined by the Administrator, to furnishing or improving telephone service in rural areas. The borrower shall submit to RUS the acquisition agreement, the original cost less depreciation of the facilities, any concurrences with the connecting companies involved, and a detailed inventory of the facilities to be purchased. The borrower must submit to RUS evidence, satisfactory to the Administrator, of the borrower's ownership of the toll line facilities before loan funds for improvement of those facilities will be advanced.

[54 FR 14626, Apr. 12, 1989. Redesignated at 55 FR 39395, Sept. 27, 1990]

§ 1735.101 With nonloan funds.

When an acquisition is limited to toll line facilities and loan funds are not involved, RUS approval of the acquisition is not required. The borrower, however, shall submit to RUS for its approval all concurrences with the connecting companies involved and any other proof of ownership of the toll facilities required by RUS.

[54 FR 14626, Apr. 12, 1989. Redesignated at 55 FR 39395, Sept. 27, 1990]

PART 1737—PRE-LOAN POLICIES AND PROCEDURES COMMON TO INSURED AND GUARANTEED TELECOMMUNICATIONS LOANS

Subpart A—General

Sec.
1737.1 General statement.
1737.2 Definitions.
1737.3 Availability of RUS forms.
1737.4—1737.9 [Reserved]

Subpart B—Preapplication Stage

1737.10 Initial contact.
1737.11 Preapplication determinations.
1737.12—1737.19 [Reserved]

Subpart C—The Loan Application

1737.20 [Reserved]
1737.21 The completed loan application.
1737.22 Supplementary information.
1737.23—1737.29 [Reserved]

Subpart D—Preloan Studies—Area Coverage Survey and Loan Design

1737.30 General.
1737.31 Area Coverage Survey (ACS).
1737.32 Loan Design (LD).
1737.33—1737.39 [Reserved]

Subpart E—Interim Financing of Construction of Telephone Facilities

1737.40 General.
1737.41 Procedure for obtaining approval.
1737.42 Procedure for construction.
1737.43—1737.49 [Reserved]

Subpart F—Review of Application Procedures

1737.50 Review of completed loan application.
1737.51 Approval of loan design.
1737.52—1737.59 [Reserved]

Subpart G—Project Cost Estimation Procedures

1737.60 Telephone loan budget.
1737.61 Cost allocation for rural and nonrural areas.
1737.62—1737.69 [Reserved]

Subpart H—Feasibility Determination Procedures

1737.70 Description of feasibility study.
1737.71 Interest rate to be considered for the purpose of assessing feasibility for loans.
1737.72—1737.79 [Reserved]

Subpart I—Characteristics Letter

1737.80 Description of characteristics letter.
1737.81—1737.89 [Reserved]

Subpart J—Final Loan Approval Procedures

1737.90 Loan approval requirements.
1737.91 Approval.
1737.92 Loan documents.
1737.93—1737.99 [Reserved]

Subpart K—Release of Funds Procedure

1737.100 Prerequisites to the release and advance of funds.
1737.101 Amounts spent for preloan activities.
1737.102—1737.109 [Reserved]

AUTHORITY: 7 U.S.C. 901 *et seq.*, 1921 *et seq.*; Pub. L. 103–354, 108 Stat. 3178 (7 U.S.C. 6941 *et. seq.*).

SOURCE: 54 FR 13356, Apr. 3, 1989, unless otherwise noted. Redesignated at 55 FR 39396, Sept. 27, 1990.

EDITORIAL NOTE: Nomenclature changes to part 1737 appear at 55 FR 39397, Sept. 27, 1990.

Subpart A—General

§ 1737.1 General statement.

(a) This part prescribes policies, procedures and responsibilities relating to applications for RUS loans to finance the improvement and extension of telephone service in rural areas. Requirements for both initial and subsequent loans are discussed, with differences pointed out.

(b) This part sets forth the policies, procedures, and requirements of RUS during the period from the receipt of a completed loan application until the advance of funds. This part sets forth the factors RUS considers in determining the characteristics of a loan, such as the amount of the loan, and conditions to the advance of funds. Involved in this determination are:

A loan budget, feasibility study, characteristics letter, loan recommendation, and release of funds. This CFR part supersedes all RUS Bulletins that are in conflict with it.

(c) See 7 CFR part 1735 on general loan policies, 7 CFR part 1737 for details on submitting a loan application, and 7 CFR part 1744 on the advance of funds.

§ 1737.2 Definitions.

As used in this part:

Access line means a transmission path between user terminal equipment and a switching center that is used for local exchange service. For multiparty service, the number of access lines equals the number of lines/paths terminating on the mainframe of the switching center.

Acquisition means the purchase of another telephone system, lines, or facilities whether by acquiring telephone plant in service or majority stock interest of one or more organizations.

Administrator means the Administrator of RUS.

Area Coverage means the provision of adequate telephone service to the widest practical number of rural users during the life of the loan.

Advance of funds means the transferring of funds by RUS to the borrower's construction fund.

Borrower means any organization which has an outstanding loan made or guaranteed by RUS, on which is seeking such financing.

Characteristics letter means the letter informing the borrower of the characteristics of the proposed loan before the loan is recommended.

Feasibility study means the pro forma financial analysis performed by RUS to determine the economic feasibility of a loan.

Forecast period means the time period beginning on the date (base date) of the borrower's balance sheet used in preparing the feasibility study and ending on a date equal to the base date plus the number of years estimated in the feasibility study for the completion of the project. Feasibility projections are usually for 5 years, see § 1737.70(a). For example, the forecast period for a loan based on a December 31, 1990 balance sheet and having a 5-year estimated project completion time is the period from December 31, 1990 to December 31, 1995.

Guaranteed loan means a loan guaranteed by RUS under section 306 of the RE Act bearing interest at a rate agreed to by the borrower and the lender.

Hardship loan means a loan made by RUS under section 305(d)(1) of the RE Act bearing interest at a rate of 5 percent per year.

Initial loan means the first loan made to a borrower.

Interim construction means the purchase of equipment or the conduct of construction under an RUS-approved plan of interim financing.

Interim financing means funding for a project which RUS has acknowledged will be included in a loan, should said

loan be approved, but for which RUS loan funds have not yet been made available.

Loan means any loan made or guaranteed by RUS.

Project means the improvements and telephone facilities financed by a particular RUS loan.

RE Act means the Rural Electrification Act of 1936, as amended (7 U.S.C. 901 et seq.).

RUS cost-of-money loan means a loan made under section 305(d)(2) of the RE Act bearing an interest rate as determined under 7 CFR 1735.31(c). RUS cost-of-money loans are made concurrently with RTB loans.

Release of funds means determination by RUS that a borrower has complied with all of the conditions prerequisite to the advances as set forth in the loan contract to the extent deemed necessary by RUS for approval of the use of loan funds and any required equity or other nonloan funds.

Reserves means loan or nonloan funds that have not been encumbered. Funds are encumbered when they have been set aside for by RUS for a particular loan purpose.

RTB loan means a loan made by the Rural Telephone Bank (RTB) under section 408 of the RE Act bearing an interest rate as determined under 7 CFR 1610.10. RTB loans are made concurrently with RUS cost-of-money loans.

Rural area means any area of the United States, its territories and possessions (including any area within the Federated States of Micronesia, the Republic of the Marshall Islands, and the Republic of Palau) not included within the boundaries of any incorporated or unincorporated city, village or borough having a population exceeding 5,000 inhabitants. The population figure is obtained from the most recent data available, such as from the Bureau of the Census and Rand McNally and Company. For purposes of the ''rural area'' definition, the character of an area is determined as of a time the initial loan for the system is made.

Special project means facilities involving investment in excess of $100,000 for any single subscriber.

Subscriber means the same as access line.

Subsequent Loan means any loan to a borrower which has already received a loan.

Telephone service means any communication service for the transmission or reception of voice, data, sounds, signals, pictures, writing, or signs of all kinds by wire, fiber, radio, light, or other visual or electromagnetic means and includes all telephone lines, facilities and systems to render such service. It does not mean:

(1) Message telegram service;

(2) Community antenna television system services or facilities other than those intended exclusively for educational purposes; or

(3) Radio broadcasting services or facilities within the meaning of section 3(o) of the Communications Act of 1934, as amended.

Times Interest Earned Ratio (TIER) means the ratio of a borrower's net income (after taxes) plus interest expense, all divided by interest expense. For the purpose of this calculation, all amounts will be annual figures and interest expense will include only interest on debt with a maturity greater than one year.

[54 FR 13356, Apr. 3, 1989. Redesignated at 55 FR 39396, Sept. 27, 1990, as amended at 56 FR 26598, June 10, 1991; 58 FR 66256, Dec. 20, 1993]

§1737.3 Availability of RUS forms.

Single copies of RUS forms and publications cited in this part are available from Administrative Services Division, Rural Utilities Service, United States Department of Agriculture, Washington, DC 20250. These RUS forms and publications may be reproduced. The terms ''RUS form'', ''RUS standard form'', and ''RUS specification'' have the same meanings as the terms ''REA form'' ''REA standard form'', and ''REA specification'', respectively, unless otherwise indicated.

[54 FR 13356, Apr. 3, 1989. Redesignated at 55 FR 39396, Sept. 27, 1990, and amended at 59 FR 66441, Dec. 27, 1994]

§§1737.4—1737.9 [Reserved]

Subpart B—Preapplication Stage

§1737.10 Initial contact.

Initial loan applicants seeking assistance should write the Rural Utilities

Service, United States Department of Agriculture, Washington, DC 20250. A field representative will be assigned by RUS to visit the applicant and discuss its financial needs and eligibility. Existing borrowers initiate the contact directly with their assigned field representative. Borrowers consult with RUS field representatives and headquarters staff, as necessary.

§ 1737.11 Preapplication determinations.

Before submitting an application to RUS, the borrower should consider the following:

(a) *Area to be served.* The proposed service area should neither include subscribers already receiving adequate service from another telephone system nor leave out unserved pockets of potential subscribers who have indicated an interest in service and are located between the proposed system and neighboring systems. See 7 CFR 1735.11 on Area Coverage and 7 CFR 1735.12 on Nonduplication. In establishing service area boundaries, borrowers should consider the location of adjoining systems, natural boundaries such as rivers and mountains, and economic and cultural features such as trading and community centers.

(b) *Number of subscribers.* The borrower must estimate the number of subscribers that will request service from the proposed system.

(c) *Acquisitions.* A borrower considering an acquisition should refer to 7 CFR 1735.20 and RUS Bulletins 320–4, 321–2, 325–1, and 326–1.

(d) *Mergers and consolidations.* A borrower considering a merger or consolidation should refer to 7 CFR 1735.19.

(e) *Refinancing.* Restrictions on the use of loan funds for refinancing are contained in 7 CFR 1735.21.

(f) *Service for nonrural subscribers.* In some situations, RUS loan funds may be used to finance facilities to serve nonrural subscribers. See 7 CFR 1735.13.

(g) *Loan amount.* The initial loan request is based on the borrower's best estimate of financing needs. RUS requires detailed studies by the borrower to complete the application and the initial estimate is subject to revision.

(h) *Loans for a portion of a system.* If it is impractical to finance facilities to provide adequate service throughout the borrower's entire telephone service area, RUS will consider a loan application to finance improvements to a portion of a borrower's system.

(i) *Telecommunications modernization plan.* A borrower applying for hardship or concurrent RUS cost-of-money and RTB loans should refer to 7 CFR part 1751, subpart B.

[54 FR 14626, Apr. 12, 1989. Redesignated at 55 FR 39395, Sept. 27, 1990, as amended at 58 FR 66256, Dec. 20, 1993]

§§ 1737.12—1737.19 [Reserved]

Subpart C—The Loan Application

§ 1737.20 [Reserved]

§ 1737.21 The completed loan application.

(a) The completed loan application consists of four parts:

(1) A completed RUS Form 490.

(2) A market survey called the Area Coverage Survey (ACS).

(3) The plan and associated costs for the proposed construction, called the Loan Design (LD).

(4) Various supplementary information specified in 7 CFR 1737.22.

(b) The RUS field representative assists the borrower in assembling this information. Certain information is required from initial loan applicants but usually not from borrowers seeking subsequent loans. Borrowers are to submit all information in paragraph (a) of this section to their RUS field representatives, who will review and then forward the packages to RUS headquarters.

(c) RUS will make a determination of completeness of the application package and will notify the borrower of this determination within 10 working days of receipt of the information at RUS headquarters. If the application package is not complete, RUS will notify the borrower of what information is needed in order to complete the application package. If the information required to complete the application package is not received by RUS within 90 working days from the date the borrower was notified of the information needed, RUS may return the application package to the borrower. Returned

applications are without prejudice and borrowers may resubmit the completed application.

(Approved by the Office of Management and Budget under control number 0572–0079)

[54 FR 13356, Apr. 3, 1989. Redesignated at 55 FR 39396, Sept. 27, 1990, as amended at 56 FR 26598, June 10, 1991]

§ 1737.22 Supplementary information.

RUS requires additional information in support of the loan application form. The information listed in paragraphs (a), (b), and (c) of this section must be submitted as part of the loan application as specified in 7 CFR 1737.21.

(a) The following must be submitted by all initial loan applicants. Borrowers seeking subsequent loans must submit any changes in these items since they were last submitted.

(1) Name of attorney and manager, and certified copies of board resolutions selecting them.

(2) Certified copy of articles of incorporation showing evidence of filing with the Secretary of State and in county records.

(3) Certified copies of bylaws and board minutes showing their adoption.

(4) Certified sample stock certificates.

(5) Amounts of common and preferred stock issued and outstanding.

(6) Names, addresses, business affiliations, and stockholdings of the manager, officers, directors, and other principal stockholders (those owning at least 20 percent of borrower's voting stock).

(7) Certified copies of real estate deeds showing all recording information.

(8) Service agreements, such as for management or system maintenance.

(9) Certified copies of existing leases, except those for vehicles, furniture and office equipment, and computer equipment.

(10) Certified copies of existing franchises.

(11) Information on any franchises required as a result of the proposed loan project.

(12) Federal Communications Commission (FCC) authorizations.

(13) Certified copy of a certificate of convenience and necessity (or its equivalent), or information demonstrating the nonduplication of reasonably adequate facilities, for all areas in the loan project.

(14) For toll, operator office, traffic, and EAS agreements, the names of all parties to the agreement, the type of agreement, and the effective and termination dates of the agreement and annexes, and the exchanges involved.

(15) Copies of rate schedules. (A copy of the tariff must be available for review by the RUS field representative.)

(16) Executed copy of RUS Form 291, ''Certification of Nonsegregated Facilities''.

(17) A sketch or map showing the existing and proposed service areas.

(18) Executed assurance that the borrower will comply with the Uniform Relocation Assistance and Real Property Acquisitions Policies Act of 1970, as amended (see 49 CFR 24.4).

(19) A certification (which is included on RUS Form 490, ''Application for Telephone Loan or Guarantee'') that the borrower has been informed of the collection options listed below that the Federal government may use to collect delinquent debt. RUS and other government agencies are authorized to take any or all of the following actions in the event that a borrower's loan payments become delinquent or the borrower defaults (OMB Circular A–129 defines ''delinquency'' for direct or guaranteed loans as debt more than 31 days past due on a scheduled payment):

(i) Report the borrower's delinquent account to a credit bureau.

(ii) Assess additional interest and penalty charges for the period of time that payment is not made.

(iii) Assess charges to cover additional administrative costs incurred by the Government to service the borrower's account.

(iv) Offset amounts owed to the borrower under other Federal programs.

(v) Refer the borrower's debt to the Internal Revenue Service for offset against any amount owed to the borrower as an income tax refund.

(vi) Refer the borrower's account to a private collection agency to collect the amount due.

(vii) Refer the borrower's account to the Department of Justice for litigation in the courts.

(20) A certification, signed by the president of the borrower, that the borrower is participating in the State's telecommunications modernization plan (for additional information concerning the plan, see 7 CFR part 1751, subpart B). This certification is not required if the borrower is seeking a guaranteed loan.

All of the actions in paragraph (a)(19) of this section can and will be used to recover any debts owed when it is determined to be in the interest of the Government to do so. The notification and the required form of certification in paragraph (a)(19) of this section are included on RUS Form 490, Application for Telephone Loan or Guarantee.

(b) The following must be submitted by all initial loan applicants and borrowers seeking subsequent loans:

(1) Certified financial statements for the last 3 years.

(2) Toll settlement statements and related data.

(3) Present exchange rates and any pending changes.

(4) Borrower's Environmental Report (BER)—See 7 CFR part 1794.

(5) A ''Certification Regarding Lobbying'' for loans, or a ''Statement for Loan Guarantees and Loan Insurance'' for loan guarantees, and when required, an executed Standard Form LLL, ''Disclosure of Lobbying Activities,'' (see section 319, Public Law 101–121 (31 U.S.C. 1352)).

(6) Executed copy of Form AD–1047, ''Certification Regarding Debarment, Suspension, and Other Responsibility Matters—Primary Covered Transactions'' (see appendix A to 7 CFR part 3017).

(7) Borrower's determination of loan maturity, including information noted in §1735.43(a) of this chapter as required.

(8) Approved depreciation rates for items under regulatory authority jurisdiction.

(9) A statement that the borrower is or is not delinquent on any Federal debt, such as income tax obligations or a loan or loan guarantee from another Federal agency. If delinquent, the reasons for the delinquency must be explained and RUS will take such explanation into consideration in deciding whether to approve the loan. RUS Form 490, ''Application for Telephone Loan or Guarantee,'' contains a section for providing the required statement and any appropriate explanation.

(10) Any other supporting data required by the Administrator.

(c) The following must be submitted for all borrowers requesting funds for refinancing:

(1) Copies of all bonds, notes, mortgages, and contracts covering outstanding indebtedness proposed to be refinanced.

(2) For each note or bond, the name of the creditor, original amount of debt and amount as of last year-end, purpose of debt, dates incurred and due, interest rates, and repayment terms.

(3) Justification for refinancing and evidence that the use of loan funds is necessary and incidental to furnishing or improving rural telephone service. See 7 CFR 1735.21.

(d) Borrowers requesting loan funds for acquisitions should refer to RUS bulletins 320–4, 321–2, 325–1, and 326–1 for requirements.

(Approved by the Office of Management and Budget under control number 0572–0079)

[54 FR 13356, Apr. 3, 1989. Redesignated at 55 FR 39396, Sept. 27, 1990, as amended at 56 FR 26599, June 10, 1991, 58 FR 66256, Dec 20, 1993]

§§ 1737.23—1737.29 [Reserved]

Subpart D—Preloan Studies—Area Coverage Survey and Loan Design

§ 1737.30 General.

In support of a loan application, the borrower shall prepare and submit to RUS: (a) A market forecast to determine service requirements (the Area Coverage Survey) and (b) engineering studies to determine the system design that provides service most efficiently (the Loan Design). The RUS field representative confers with the borrower and its engineer to schedule the completion and submission of these studies.

(Approved by the Office of Management and Budget under control number 0572–0079)

§ 1737.31 Area Coverage Survey (ACS).

(a) The Area Coverage Survey (ACS) is a market forecast of service requirements of subscribers in a proposed service area.

(b) The objective of the ACS is to determine the location, number and telephone service requirements of subscribers in a service area. RUS will use the ACS to appraise the proposed plan for area coverage and to determine the largest practical number of rural subscribers which can be served on an economically feasible basis. Preparation of the ACS requires:

(1) A field survey of the service area to locate and identify on maps all business and residential establishments, whether currently served or not. The location and identification of future establishments are also recorded on the maps.

(2) A forecast of the number of telephone subscribers, in the entire service area, by exchange, grade and class of service, projected for the end of the 5-year study period.

(c) The results of the survey and forecast shall be:

(1) Shown on maps (maps for those service areas previously financed by RUS do not have to be included in the ACS provided that the borrower's records contain sufficient information as to subscriber development to enable cost estimates for the proposed facilities to be prepared);

(2) Tabulated on RUS Form 569 ''Area Coverage Survey Report,'' or its equivalent; and

(3) supported by a narrative (see § 1737.32(f)(1)(ii)) containing information on the bases for the service requirement forecasts in each exchange.

(d) Guidelines on preparing an ACS are provided in RUS Telecommunications Engineering and Construction Manual section 205.

(e) The RUS field representative reviews and approves the borrower's ACS. The borrower should make sure this is done before proceeding with the Loan Design in order to prevent unnecessary expense should the ACS not be approved. The borrower's engineer must use the RUS-approved ACS in preparing the Loan Design.

(Approved by the Office of Management and Budget under control number 0572–0079)

§ 1737.32 Loan Design (LD).

(a) A loan application requires supporting data collectively called a ''Loan Design.'' The LD contains a forecast of service requirements and a narrative with supporting exhibits. Most of the items included in the LD are similar for all loan applications. However, as noted below, there are certain additional requirements for initial loans and for any exchange areas not previously financed by RUS, and other additional requirements for subsequent loans for areas previously financed by RUS. The LD must conform to the borrower's state telecommunications modernization plan unless the borrower is seeking a guaranteed loan (for additional information concerning the plan, see 7 CFR part 1751, subpart B).

(b) Because of the importance and complexity of the engineering studies necessary for the LD, it should be prepared by a competent experienced telecommunications engineer. While the LD is subject to RUS approval, the borrower's selection of an engineer to perform preloan work is not. Note: The borrower's selection of an engineer to perform postloan work *is* subject to RUS approval. This should be considered when selecting a preloan engineer, if the same individual or company is to perform both services. See 7 CFR 1753.17.

(c) An LD for initial loans or for any exchange areas not previously financed by RUS requires an Outside Plant Design that provides:

(1) The most economical and practical design for a telephone system that meets immediate service demands; and

(2) The basis for orderly expansion of the system to serve the widest practical number of rural establishments.

(d) The LD for a subsequent loan (which only includes areas previously financed by RUS) does not require a detailed Outside Plant Design. The detailed Outside Plant Design for these subsequent loans may be completed for

RUS review and approval after loan approval, but before staking is started and plans and specifications are prepared. By scheduling preparation of the outside plant design closer to preparation for construction, the need for redesign resulting from changing conditions and its attendant costs are reduced.

(e) Guidelines on preparing an LD are provided in RUS Telecommunications Engineering and Construction Manual section 205.

(f) The LD shall include a narrative, several exhibits, and a certification, as explained below:

(1) *Narrative.* This section discusses the following topics, as appropriate.

(i) *General.* The purposes and amount of the proposed construction and both immediate and long range plans must be covered. The source and amount of any nonloan funds to be used for this construction must be discussed.

(ii) *Subscriber data.* The basis for the subscriber forecast, including any unusual factors expected to influence growth, must be discussed. Reasons for growth projections which vary from historic trends must be explained.

(iii) *Proposed construction.* All proposed construction must be described fully. Reference to the BER must be made here.

(iv) *Service area.* For subsequent loans only, proposed construction which is not within the boundaries of prior loan projects must be discussed. New areas to be served (even if from existing exchanges) must be shown on maps submitted with the proposal.

(v) *Toll and EAS.* Proposed new toll or extended area service (EAS) facilities, including any changes from the existing trunking arrangements, must be described fully. Minutes of meetings and correspondence with connecting companies, and connecting company concurrences, if any, must be included.

(vi) *Radio telephone service.* Proposed radio telephone service must be discussed. Results of studies demonstrating demand and/or need most be included as an exhibit.

(vii) *Special projects.* Facilities involving investment in excess of $100,000 for any single subscriber must be discussed fully. Contractual arrangements with the subscriber, including a termination agreement providing for (A) the full recovery by the borrower of its capital costs of the facilities no later than the maturity date of the note representing the loan, (B) the immediate repayment of all remaining capital costs, if terminated, and (C) repayment to RUS of the outstanding amount of the special note shall be submitted. Usually a separate short-term note is prepared for loans to finance Special Projects.

(viii) *Investment in nonrural areas.* (A) For initial loans, or loans for areas not previously financed by RUS, the borrower must fully discuss proposed improvements or expansions in an exchange serving a community over 5,000 population. The name of the community, the number of existing and projected new subscribers by grades of service within the community, detailed cost estimates of the facilities involved, and information sufficient to establish the necessity for the use of loan funds must be provided.

(B) For subsequent loans, the borrower must fully discuss as specified in paragraph (f)(1)(viii)(A) of this section proposed improvements or expansions in an exchange serving a community over 5,000 population which had a population of more than 5,000 at the time the facilities to serve the community were first financed by RUS. The population determination is based on the corporate limits or boundaries of unincorporated areas in existence at the time the facilities to serve the community were first financed by RUS.

(C) For subsequent loans, the borrower shall state whether the population of a community, which is currently more than 5,000, was considered rural at the time RUS first financed the facilities to serve the community. Detailed cost estimates are not required if the population was considered rural at the time RUS first financed facilities to serve the community, see 7 CFR 1735.13(d).

(ix) *Prior loan project.* For subsequent loans only, the reason for and amount of additional loan funds needed to complete construction in progress which was part of a prior loan project in central office areas not included in the current LD must be discussed fully.

(x) *Route miles.* Route miles of outside plant in central office areas not shown on RUS Form 495 must be provided.

(xi) *Future plans.* Where the loan application is to finance part of a system-wide upgrading plan, plans for those remaining exchanges not included in the current loan proposal must be discussed.

(2) *Exhibits.* (i) An RUS Form 569, ''Area Coverage Survey Report,'' or its equivalent shall be included for the total system and for each exchange in which system improvements or additions are proposed.

(ii) An RUS Form 495, ''Construction Cost Estimates,'' or its equivalent shall be prepared for each exchange in which system improvements or additions are proposed. An explanation of the method used in developing these cost estimates must be included.

(iii) RUS Form 494, ''Loan Design Summary,'' or its equivalent shall be prepared for each loan. This must show all expected 5-year construction costs, loan and nonloan.

(iv) A schematic trunking diagram shall be included showing the number and type, length, ownership and make-up of existing and proposed toll and EAS trunks, plus transmission and traffic data for each trunk group.

(v) Detailed outside plant design maps must be submitted for all central office areas of initial loan applicants and for areas not previously served by existing borrowers or financed by RUS. These design maps must be in sufficient detail to substantiate the construction cost estimates.

(vi) For subsequent loans only, if a change in system boundaries is proposed, a map must be furnished showing present and proposed boundaries, and existing establishments and subscribers in the new areas.

(vii) Any other special exhibits needed to support particular items in the loan proposal must be included.

(3) *Certification.* The following certification shall be signed by a principal of the engineering firm and the borrower:

We, the undersigned, certify that the data in this Loan Design are correct to the best of our knowledge and belief and reasonably reflect the cost to serve the subscribers as proposed on the Forms 569, ''Area Coverage Survey Report,'' which are integral parts hereof, and that this Loan Design adheres to RUS engineering and construction standards and practices.

(g) The RUS field representative shall review and make a recommendation on each LD.

(1) After completion of the LD, the borrower arranges a meeting with its engineer and RUS's field representative to review:

(i) Design and cost estimates.

(ii) Reserves available from prior loans, if any, or internally generated funds which may be applied against the requirements of the current application.

(2) One copy of RUS Form 567, ''Checklist for Review of Loan Design,'' completed and signed by the borrower's engineer must be attached to the LD submitted to the RUS field representative.

(3) The RUS field representative recommends acceptance of the LD as the basis for RUS financing.

(4) Three copies of the final LD with the RUS field representative's recommendation are then sent to the relevant Area Office in RUS. A fourth copy is retained by the RUS field representative.

(5) A transmittal letter from the borrower must accompany the LDs, requesting that the application previously submitted be amended so as to be consistent with the approved LD.

(6) Final approval of the LD is given by the relevant Area Office in RUS. To be approved, the LD must be cost effective, include appropriate technology, and provide area coverage.

(7) Upon receipt of the LD and any other required information, RUS makes a preliminary analysis of the loan proposal. Before final consideration of the loan, RUS reviews the results of its preliminary analysis with the borrower.

(Approved by the Office of Management and Budget under control number 0572–0079)

[54 FR 13356, Apr. 3, 1989; 54 FR 16194, Apr. 21, 1989. Redesignated at 55 FR 39396, Sept. 27, 1990; 58 FR 66256, Dec. 20, 1993]

§§ 1737.33—1737.39 [Reserved]

Subpart E—Interim Financing of Construction of Telephone Facilities

§ 1737.40 General.

(a) Under special circumstances a borrower may request that RUS approve interim financing for interim construction. This subpart describes the circumstances in which RUS will consider approving interim financing of construction, the information to be submitted to RUS to support the borrower's request, RUS's requirements relating to interim construction, and related matters.

(b) For a borrower to preserve the option of obtaining loan funds for reimbursement of interim financing, it must obtain prior RUS approval of its interim financing plan and follow the procedures in 7 CFR 1737.41 and 7 CFR 1737.42.

(c) RUS will approve interim financing only for projects which must be performed immediately.

(d) RUS approval of interim financing is not a commitment that RUS will make loan funds available.

(e) Equal employment opportunity requirements apply to interim construction. See RUS Bulletin 320–15.

§ 1737.41 Procedure for obtaining approval.

(a) The borrower shall submit to the RUS Area Office a written request for approval of interim financing. This request shall include:

(1) A description of the construction proposed under interim financing.

(2) An explanation of the urgency of proceeding with the proposed construction.

(3) An estimate of the cost.

(4) The source of funds to be used for interim financing.

(b) RUS will not approve interim financing until it has reviewed and found acceptable:

(1) All of the information required under § 1737.21; or

(2) The following documents:

(i) The loan application (RUS Form 490) clearly marked ''in support of interim financing request.''

(ii) The Loan Design (LD), or the portion thereof that covers the proposed construction if the completed LD is not available. See 7 CFR 1737.32.

(iii) Evidence that the borrower has satisfied the requirements of 7 CFR part 1794 applying to the proposed interim construction.

(iv) A statement that the borrower is or is not delinquent on any Federal debt, such as income tax obligations or a loan guarantee from another Federal agency. If delinquent, the reasons for the delinquency must be explained and RUS will take such explanation into consideration in deciding whether to approve the interim financing, see 7 CFR 1737.22(b)(9).

(v) A ''Certification Regarding Lobbying'' for loans, or a ''Statement for Loan Guarantees and Loan Insurance'' for loan guarantees, and when required, an executed Standard Form LLL, ''Disclosure of Lobbying Activities,'' (see section 319, Pub. L. 101–121 (31 U.S.C. 1352)).

(vi) Executed copy of Form AD–1047, ''Certification Regarding Debarment, Suspension, and Other Responsibility Matters—Primary Covered Transactions'' (see appendix A to 7 CFR part 3017).

(vii) Any other supporting data required by the Administrator.

(c) RUS will not approve a borrower's request for approval of interim financing if, in RUS's judgment:

(1) The proposed interim financing does not comply with the requirements of this subpart.

(2) The proposed interim construction will not qualify for RUS financing.

(3) The proposed interim financing presents unacceptable loan security risks to RUS, or otherwise is not in the best interests of RUS.

(Approved by the Office of Management and Budget under control number 0572–0079)

[54 FR 13356, Apr. 3, 1989. Redesignated at 55 FR 39396, Sept. 27, 1990, as amended at 56 FR 26599, June 10, 1991; 59 FR 54381, Oct. 31, 1994]

§ 1737.42 Procedure for construction.

(a) If RUS approves the interim financing, interim construction shall be conducted in accordance with 7 CFR Part 1753, 7 CFR 1788, RUS Bulletin 320–15, and RUS Bulletins 381–1, 381–2, 381–

4, 381–7, 381–8, 381–9, 381–10, 381–11, 381–13, 382–1, 382–2, 382–3, 383–1, 383–4, 384–1, 384–2, 384–3, 385–1, 385–2, 385–3, 385–4, 385–5, 385–6, 387–1, 387–2, 387–3, 387–4, and 387–5) except for the following:

(1) All sellers and contractors invited to bid must be informed that funds from sources other than RUS will be used to pay for construction.

(2) Contracts involving the interim construction must contain a provision, in form and substance satisfactory to RUS, stating that RUS is not committed to lend or advance funds to finance the project.

(3) Contracts will not be approved by RUS until the borrower demonstrates to RUS's satisfaction that funds from sources other than RUS will be available when needed to pay invoices submitted in accordance with contract payment terms.

(4) The borrower shall not begin interim construction until all necessary licenses, permits, and other governmental approvals have been obtained.

(b) After RUS loan funds are released, the borrower can obtain reimbursement for interim financing by submitting a Financial Requirement Statement. See 7 CFR Part 1744, subpart C (or RUS Bulletin 327–1).

(1) The first advance of loan funds to a borrower that has received interim financing approval generally will be limited to funds to repay any interim financing indebtedness and such additional amounts as RUS deems necessary. RUS will make no further advances of loan funds until the borrower has submitted evidence, in form and substance satisfactory to the Administrator, that (i) any indebtedness created by the interim financing and any liens associated therewith have been fully discharged of record and (ii) the borrower has satisfied all other conditions on the advance of additional loan funds.

(2) If the source of funds for interim financing is the borrower's internally generated funds, the borrower may request reimbursement of those funds along with advances for other purposes on the first Financial Requirement Statement.

[54 FR 13356, Apr. 3, 1989; 54 FR 16194, Apr. 21, 1989. Redesignated at 55 FR 39396, Sept. 27, 1990]

§§ 1737.43—1737.49 [Reserved]

Subpart F—Review of Application Procedures

§ 1737.50 Review of completed loan application.

(a) The completed loan application consists of:

(1) A completed RUS Form 490, ''Application for Telephone Loan or Loan Guarantee;''

(2) A completed certification Form AD–1047, ''Certification Regarding Debarment, Suspension, and Other Responsibility Matters—Primary Covered Transactions,'' (see appendix A to 7 CFR part 3017);

(3) A market survey called the Area Coverage Survey (ACS);

(4) The plan and associated costs for the proposed construction, called the Loan Design (LD);

(5) Evidence that the borrower is participating in a telecommunications modernization plan in the state where the proposed construction will occur, unless the borrower is seeking a guaranteed loan; and

(6) Various supplementary information.

See 7 CFR part 1737 for additional information.

(b) RUS shall review the completed loan application, particularly noting subscriber data, grades of service, extended area service (EAS), connecting company commitments, commercial facilities, system and exchange boundaries, and proposed acquisitions. RUS shall review the LD to determine that the system design is acceptable to RUS, that the design is technically correct, that the cost estimates are reasonable, and that the design provides for area coverage service. RUS shall also review the population and incorporation status of all communities served or to be served by the borrower to determine if any nonrural areas are served and if municipal franchises are required. Any RUS lending for nonrural areas must be in accordance with 7 CFR part 1735. RUS shall also check the ''List of Parties Excluded from Federal Procurement of Nonprocurement Programs'', compiled, maintained and distributed by General Services Administration, to determine

whether the borrower is debarred, suspended, ineligible, or voluntarily excluded (see 7 CFR 3017.505).

(c) RUS will notify the borrower if RUS recommends major changes in subscriber projections, design, cost estimates, or other significant matters. RUS will not continue loan processing until RUS and the borrower agree on all major changes.

[54 FR 13356, Apr. 3, 1989; 54 FR 16194, Apr. 21, 1989. Redesignated at 55 FR 39396, Sept. 27, 1990; 58 FR 66256, Dec. 20, 1993]

§ 1737.51 Approval of loan design.

RUS shall notify the borrower when the preloan data concerning the system design and costs and subscriber projections have been approved. If found acceptable, RUS will approve the LD with any required changes. A copy of the approved LD, with any significant changes, as determined by RUS, will be returned to the borrower.

§§ 1737.52—1737.59 [Reserved]

Subpart G—Project Cost Estimation Procedures

§ 1737.60 Telephone loan budget.

(a) RUS shall prepare a ''Telephone Loan Budget'' (RUS Form 493) showing all costs for the proposed project and the amount of loan and nonloan funds to be used. The budget shall show, as applicable, amounts for central offices, outside plant and station equipment, right-of-way procurement, land, buildings, removal costs, special projects, engineering, vehicles and work equipment, office equipment, operating funds, refinancing with loan funds, debt retirement with nonloan funds, acquisitions, and contingencies. The amounts budgeted, exclusive of prior loan reserves, generally shall be rounded to the nearest $1,000.

(1) If the loan is to be made by the Rural Telephone Bank (RTB) or concurrently with RTB, the budget shall include the amount required for the purchase of RTB Class B stock. This is 5 percent of the amount to be borrowed from RTB for all purposes other than the purchase of RTB Class B stock. The borrower may elect to use nonloan funds for all or part of this requirement.

(2) The amount of funds included in any loan shall be limited for certain items:

(i) Operating funds for working capital or current operating deficiencies shall be included only in cases of financial hardship as determined by the Administrator.

(ii) Contingencies shall not exceed 3 percent of the total amount of loan funds to be used for construction, engineering, operating equipment and operating funds.

(b) RUS shall prepare the cost estimates based on the data in RUS Form 494, ''Loan Design Summary,'' and RUS Form 495, ''Construction Cost Estimates,'' or their equivalents, and other parts of the LD submitted by the borrower, and on other pertinent information. See subpart D of this part. The amounts included in the proposed budget shall be the estimated costs, less the value of materials and supplies on hand or acquired that can be used in the proposed construction. The cost estimates in the LD may be adjusted by RUS in consultation with the borrower. See § 1737.50(c).

(c) Generally, the new loan shall be reduced by any required equity funds and funds available in reserves no longer needed for prior loan purposes to determine the proposed loan requirement.

(d) When amounts are available in reserves no longer needed for prior loan purposes, RUS may, at its option, deny further advances of these funds if they will be used to finance projects in the proposed loan.

(e) The budget shall also show, if applicable, the reserves for each budget item as of the date of the latest RUS Form 481, ''Financial Requirement Statement,'' submitted by the borrower. To ensure that sufficient funds are included in the budget to finance all proposed construction, RUS includes in the budget any funds deposited by the borrower for approved interim financing.

§ 1737.61 Cost allocation for rural and nonrural areas.

(a) Pursuant to the requirements in 7 CFR part 1735, if loan funds are proposed for facilities to serve subscribers in nonrural areas, RUS shall allocate

costs between rural and nonrural areas. This allocation will be used to determine whether the use of loan funds in nonrural areas is necessary and incidental to furnishing and improving telephone service in rural areas. Cost estimates shall be provided by the borrower in the LD. See subpart D of this part. RUS will use the following method to review the cost breakdowns and to determine their appropriateness:

(1) The costs of facilities associated directly with particular subscribers shall be allocated to those subscribers.

(2) The costs of facilities that serve both rural and nonrural subscribers shall be allocated based on the relative number of rural and nonrural subscribers receiving service from those facilities.

(3) When a borrower's exchange that includes a nonrural community will have an extended area of service (EAS) with other exchanges of the borrower, the breakdown of subscribers and funds in the allocation for rural and nonrural areas included in the proposed loan shall show the number of rural and nonrural subscribers and the costs to serve each group, as determined per paragraphs (a)(1) and (a)(2) of this section, in the subject exchange and in all exchanges connected by EAS.

(b) If RUS determines that costs cannot be adequately allocated using the procedures in paragraphs (a)(1) through (a)(3) of this section, RUS shall, on a case by case basis, allocate costs between the rural and nonrural subscribers using whatever methodology it deems reasonable. All allocations in paragraphs (a) and (b) of this section shall be documented.

§§ 1737.62—1737.69 [Reserved]

Subpart H—Feasibility Determination Procedures

§1737.70 Description of feasibility study

(a) In connection with each loan RUS shall prepare a feasibility study that includes sections on consolidated loan estimates, operating statistics, projected telecommunications, plant, projected retirement computations, and projected revenue and expense estimates (including detailed estimates of depreciation and amortization expense, scheduled debt service payments, toll and access charge revenues, and local service revenues). Normally, projections will be for a 5-year period and used to determine the ability of the borrower to repay its loans in accordance with the terms thereof. RUS will not require borrowers to raise local service rates. Local service revenue projections will be based on the borrower's existing local service rates or regulatory body approved rates not yet in effect but to be implemented within the Forecast period. In the latter case, if a borrower is not required to obtain regulatory body approval for the implementation of such rates, RUS will require a resolution of the board of directors indicating when those rates will be in effect.

(b) RUS makes loans only to rural telephone systems that are financially feasible. RUS shall consider the factors discussed in paragraphs (c) through (j) of this section in determining feasibility.

(c) The revenue and expense estimates for the feasibility study generally will be based on the borrower's operating experience provided that:

(1) Adjustments are made for any nonrecurring revenues and expenses that are not representative of the borrower's past operations and would thus make the borrower's experience data inappropriate for the forecast; and

(2) Adjustments are made for any special or new characteristics or other considerations deemed necessary by the Administrator.

(d) [Reserved]

(e) Depreciation expense will be determined using depreciation rates appropriate to the normal operation of the borrower, based on:

(1) The borrowers regulatory body approved depreciation rates; and

(2) Where such rates as described in paragraph (e)(1) of this section do not exist for items which the borrower is seeking financing, the most recent median depreciation rates published by RUS for all borrowers. RUS will publish such depreciation rates annually in RUS's ''Statistical Report, Rural Telephone Borrowers.''

(f) Projected scheduled debt service payments will generally be based on all

of the borrower's outstanding and proposed loans from RUS and all other lenders as of the end of the feasibility Forecast period (i.e. for a 5-year Forecast period, the amount of debt outstanding in year 5).

(g) The financial and statistical data are derived from RUS Form 479, ''Financial and Statistical Data for Telephone Borrowers,'' or for initial loans, the data may be obtained from the borrower's financial statements and other reports, and from other information supplied with the completed loan applications (see 7 CFR 1737.21 and 1737.22).

(h) When, in RUS's opinion, the borrower's operating experience is not adequate or the borrower's current operations are not representative, the estimates in the feasibility study normally will be developed from state and regional standards based on the experience of RUS borrowers. These standards are included in the Borrower's Statistical Profile (BSP), which is revised annually by RUS. If the borrower's operating experience is not the basis for one or more per-subscriber estimates used in the feasibility study, the estimates generally may not vary from the standard by more than 20 percent to reflect the particular characteristics of the loan applicant. Any variation from the standard shall be documented.

(i) In cases where these per-subscriber standards do not represent a reasonable forecast of a particular borrower's operations (for example, when a variation greater than 20 percent is necessary), estimates based upon a special analysis of the borrower's projected operations shall be used. The special analysis will accompany the feasibility study.

(j) When it is reasonably expected that a subscriber, classified as a special project, may discontinue service, a second feasibility study will be prepared, for comparison purposes, omitting revenues and expenses from this subscriber.

(k) RUS may obtain and review commercially available credit reports on applicants for a loan or loan guarantee to verify income, assets, and credit history, and to determine whether there are any outstanding delinquent Federal or other debts. Such reports will also be reviewed for parties that are or propose to be joint owners of a project with a borrower.

(l) If it is determined that loan feasibility cannot be proven as described in this section, the loan application will be returned to the borrower with an explanation. A borrower whose application has been returned will have 90 working days, from the date the application was returned, to revise and resubmit its application. If a revised application is not received by RUS within the 90-day period described above, the application will be canceled and a new application will need to be submitted if the borrower wishes further consideration.

[54 FR 13356, Apr. 3, 1989. Redesignated at 55 FR 39396, Sept. 27, 1990, as amended at 56 FR 26599, June 10, 1991; 58 FR 66256, Dec. 20, 1993; 62 FR 46872, Sept. 5, 1997]

§ 1737.71 Interest rate to be considered for the purpose of assessing feasibility for loans.

(a) For purposes of determining the creditworthiness of a borrower for concurrent RUS cost-of-money and RTB loans, the Administrator shall assume that the loans, if made, would bear interest at the Treasury rate on the date of determination as described in paragraph (b) of this section. If the Treasury rate exceeds 7 percent, the interest rate used to determine eligibility for the RUS cost-of-money loan will be 7 percent.

(b) The 30-year Treasury rate will be used in all feasibility studies for loans with a final maturity of at least 30 years. A straight-line interpolation between other Treasury rates will be used to determine the rate used in feasibility studies for loans with final maturities of less than 30 years.

(c) The Treasury rate will be obtained each Tuesday, or as soon as possible thereafter, from the Federal Reserve. The rate for the current week, from the column labeled ''This week'' in the Federal Reserve statistical release, will be used from that Wednesday through the following Tuesday.

(d) As used in this section, the ''date of determination'' means the date of the feasibility study used in support of the loan recommendation.

[58 FR 66257, Dec. 20, 1993]

§§1737.72—1737.79 [Reserved]

Subpart I—Characteristics Letter

§1737.80 Description of characteristics letter.

(a) After all of the studies and exhibits for the proposed loan have been prepared, but before the loan is recommended, RUS shall inform the borrower, in writing, of the characteristics of the proposed loan. The purpose of the characteristics letter is to inform the borrower and obtain its concurrence, before further consideration by RUS of the loan approval and the preparation of legal documents relating to the loan, in such matters as the amount of the proposed loan, its purposes, rate of interest, loan security requirements, and other prerequisites to the advance of loan funds. The letter, whether or not concurred in by the borrower, does not commit RUS to approve the loan on these or any other terms.

(b) The Forecast of Revenues and Expenses and a copy of RUS Form 493, ''Telephone Loan Budget,'' shall be enclosed with the characteristics letter. This copy of the budget shall be subject to change by RUS with the borrower's agreement.

[54 FR 13356, Apr. 3, 1989. Redesignated at 55 FR 39396, Sept. 27, 1990, as amended at 56 FR 26600, June 10, 1991]

§§1737.81—1737.89 [Reserved]

Subpart J—Final Loan Approval Procedures

§1737.90 Loan approval requirements.

(a) In addition to requirements set forth in 7 CFR part 1735, 7 CFR part 1737 and other applicable parts of 7 CFR chapter XVII, the following are certain additional requirements that must be met before RUS will approve a loan:

(1) If the borrower had 100 or more employees as of the prior December 31, it must submit the current annual Employer Information Report EEO–1, Standard Form 100, as required by the Department of Labor; see 29 CFR 1602.7 through 1602.14.

(2) The borrower must be in compliance with regulations on nondiscrimination. See 7 CFR part 1790 (or RUS Bulletin 320–19).

(3) For subsequent loans, RUS must determine whether the borrower's accounting records are adequate. If the records are not adequate, as determined by RUS based on Generally Accepted Accounting Principles or other accounting conventions as deemed necessary by RUS, a provision will be included in the loan contract requiring the borrower to improve its records to an adequate level.

(4) The borrower must not have any receivables, loans, guarantees, investments, or other obligations that are contrary to the mortgage provisions or any RUS regulations including, but not limited to, 7 CFR part 1758 (or RUS Bulletins 320–4, 320–22, 321–2, 322–2, 323–1, or 326–1). If the borrower has any of these items, the loan contract shall contain a provision requiring that they be eliminated prior to the release of funds. See 7 CFR part 1744 for conditions under which RUS will provide a shared first lien and/or a lien accommodation for non-RUS lenders.

(5) RUS must make a determination on flood insurance requirements. In accordance with the National Flood Insurance Act of 1968, as amended by the Flood Disaster Protection Act of 1973, as amended (the ''Flood Insurance Act''), RUS shall not approve financial assistance for the acquisition, construction, repair or improvement of any building or any machinery, equipment, fixtures or furnishings contained or to be contained in any such building located in an area which has been identified by the Director of the Federal Emergency Management Agency (the ''Director of FEMA'') pursuant to the Flood Insurance Act as an area having special flood hazards unless:

(i) Flood insurance has been made available, pursuant to the Flood Insurance Act, in the area in which the acquisition, construction, repair or improvement is proposed to occur; and

(ii) The borrower has obtained flood insurance coverage with respect to such building, machinery, equipment, fixtures or furnishings as may be required pursuant to the Flood Insurance Act.

Accordingly, a finding shall be made on whether loan funds will be used to finance buildings, machinery, fixtures or furnishings located in an identified special flood hazard area. If loan funds are to be used in such a special flood hazard area, a provision will be included in the loan contract restricting the release of funds until all the requirements of the Flood Insurance Act have been satisfied.

(6) All environmental requirements must be met (see 7 CFR part 1794).

(b) [Reserved]

[54 FR 13356, Apr. 3, 1989. Redesignated at 55 FR 39396, Sept. 27, 1990, as amended at 56 FR 26600, June 10, 1991]

§ 1737.91 Approval.

(a) A loan is approved when the Administrator, or whoever is delegated authority, signs the administrative findings and the letter to the borrower announcing the loan.

(b) If the loan is not approved, RUS shall notify the borrower, in writing, of the reasons.

§ 1737.92 Loan documents.

Following approval of the loan, RUS shall forward the necessary loan documents to the borrower for execution, delivery, recording, and filing, as directed by RUS. See 7 CFR part 1758 for details (or RUS Bulletins 320–4, 320–22, 321–2, 322–2, 323–1, or 326–1).

§§ 1737.93—1737.99 [Reserved]

Subpart K—Release of Funds Procedure

§ 1737.100 Prerequisites to the release and advance of funds.

(a) Standard prerequisites to the advance of funds, generally applied to all loans, are set forth in Article II of the form of loan contract attached as appendix A to 7 CFR part 1758. Additional prerequisites may be added on a case by case basis to the loan contract.

(b) Before any loan funds can be advanced, RUS must approve a release of funds.

(c) RUS approves the release of funds only after it determines that all prerequisites to the advance of loan funds have been met or funds should be advanced even though certain loan contract prerequisites remain unsatisfied.

(d) Following release approval, loan funds and related nonloan funds may be advanced in accordance with 7 CFR part 1744.

(e) The borrower may be required to discharge indebtedness and/or to close acquisitions before advances are made for construction purposes. In such cases, the borrower shall submit evidence that these actions have been completed. If the evidence is satisfactory to RUS, RUS shall allow the remaining loan funds to be advanced in accordance with 7 CFR part 1744.

(Approved by the Office of Management and Budget under control number 0572–0085)

§ 1737.101 Amounts spent for preloan activities.

If the borrower desires to credit amounts spent for preloan activities against any equity or general funds required by the loan contract, it shall submit an itemized statement of such expenditures to the Area Office. These expenditures will be accounted for on RUS Form 503, ''Release of Telephone Loan Funds,'' if RUS determines that the amounts spent are reasonable based on normal industry practice and that the procedures set forth in 7 CFR part 1737, subpart D, have been complied with. Statements of preloan expenditures will be verified as to accuracy by loan fund audits.

(Approved by the Office of Management and Budget under control number 0572–0085)

§§ 1737.102—1737.109 [Reserved]

PART 1741—PRE-LOAN POLICIES AND PROCEDURES FOR INSURED TELEPHONE LOANS [RESERVED]

PART 1744—POST-LOAN POLICIES AND PROCEDURES COMMON TO GUARANTEED AND INSURED TELEPHONE LOANS

Subpart A—[Reserved]

Subpart B—Lien Accommodations and Subordination Policy

Sec.

1744.20 General.

1744.21 Definitions.
1744.22—1744.29 [Reserved]
1744.30 Act purposes.
1744.31—1744.39 [Reserved]
1744.40 Non-Act purposes.
1744.41—1744.49 [Reserved]
1744.50 Application procedures.
1744.51—1744.59 [Reserved]

Subpart C—Advance and Disbursement of Funds

1744.60 General.
1744.61 [Reserved]
1744.62 Introduction.
1744.63 The telephone loan budget.
1744.64 Budget adjustment.
1744.65 The construction fund.
1744.66 The financial requirement statement (FRS).
1744.67 Temporary excess construction funds.
1744.68 Order and method of advances of telephone loan funds.
1744.69 [Reserved]

Subpart D—[Reserved]

Subpart E—Borrower Investments

1744.200 General statement.
1744.201 Definitions.
1744.202 Borrowers may make qualified investments without prior approval of the Administrator.
1744.203 Establishing amount of rural development investment.
1744.204 Rural development investments that do not meet the ratio requirements.
1744.205 Determinations and application of limitations described in § 1744.202.
1744.206 Effect of subsequent failure to maintain ratios.
1744.207 Investment not to jeopardize loan security.
1744.208 Rural development investments before November 28, 1990.
1744.209 Records.
1744.210 Effect of this subpart on RUS loan contract and mortgage.

AUTHORITY: 7 U.S.C. 901 *et seq.*; 7 U.S.C. 1921 *et seq.*; Pub. L. 103–354, 108 Stat. 3178 (7 U.S.C. 6941 *et seq.*).

EDITORIAL NOTE: Nomenclature changes to part 1744 appear at 55 FR 39397, Sept. 27, 1990.

Subpart A—[Reserved]

Subpart B—Lien Accommodations and Subordination Policy

SOURCE: 51 FR 32430, Sept. 12, 1986, unless otherwise noted. Redesignated at 55 FR 39396, Sept. 27, 1990.

§ 1744.20 General.

Recent changes in the telephone industry, including deregulation and technological developments, have caused RUS borrowers and other organizations providing telephone services to consider undertaking projects to provide new telecommunication services. Although certain telecommunication services may not be eligible for financing under the RE Act, these services may nevertheless advance Act objectives where the borrower obtains financing from private lenders. The borrower's financial strength and the assurance of repayment of outstanding Government debt may be improved as a result of providing new telecommunication services. To facilitate the financing of new telecommunication services, RUS is willing to consider accommodating the Government's lien on telephone borrowers' systems or subordinating the Government's lien on after-acquired property of telephone borrowers. This part sets forth RUS policy with respect to such lien accommodations and subordinations. The policies of this part will also be utilized by the Governor of the Rural Telephone Bank in carrying out the Rural Telephone Bank's loan program.

§ 1744.21 Definitions.

Accommodation means sharing the Government's lien on a pari passu or pro rata basis with a private lender.

Act means the Rural Electrification Act of 1936. as amended (7 U.S.C. 901 *et seq.*)

Administrator means the Administrator of RUS. See 7 CFR part 1735.

Advance means transferring funds from RUS or FFB to the borrower's construction fund.

After-acquired property means property which is to be acquired by the borrower and which would be subject to the lien of the Government's mortgage when acquired.

Borrower means any organization that has an outstanding loan made or guaranteed by RUS, or that is seeking such financing. See 7 CFR part 1735.

Construction Fund means the RUS Construction Fund Account required by section 2.4 of the Loan Contract into which all RUS loan funds are advanced.

Disbursement means the paying of money by the borrower out of the construction fund for approved loan purposes.

FFB means the Federal Financing Bank.

FRS means RUS Form 481 (OMB–No. 0572–0023) Financial Requirement Statement.

Hardship loan means a loan made by RUS under section 305(d)(1) of the RE Act bearing interest at a rate of 5 percent per year.

Interim Construction means the purchase of equipment or the conduct of construction under an RUS-approved plan of interim financing. See 7 CFR part 1737.

Interim Financing means funding for a project which RUS has acknowledged will be included in a loan, should said loan be approved, but for which RUS loan funds have not yet been made available.

Loan (*RUS Loan*) means any loan made or guaranteed by RUS. See 7 CFR part 1735.

Loan Documents means the loan contract, note and mortgage between the borrower and RUS and any associated document pertinent to a loan.

Loan Funds (*RUS Loan Funds*) means funds provided by RUS through direct or guaranteed loans.

Private lender means any lender other than the Rural Utilities Service, the Rural Telephone Bank or the Federal Financing Bank.

RUS cost-of-money loan means a loan made under section 305(d)(2) of the RE Act bearing an interest rate as determined under 7 CFR 1735.31(c). RUS cost-of-money loans are made concurrently with RTB loans.

RTB means the Rural Telephone Bank.

Subordination means granting a lien which a private lender has on specific property priority over the Government's lien on such property.

Telecommunication services means any service for the transmission, emission, or reception of signals, sounds, images, or intelligence of any nature by optical waveguide, wire, radio, or other electromagnetic systems and shall include all facilities used in providing such service as well as the development, manufacture, sale, and distribution of such facilities.

[51 FR 32430, Sept. 12, 1986. Redesignated at 55 FR 39396, Sept. 27, 1990. Further redesignated and amended at 59 FR 43716, Aug. 25, 1994]

§§ 1744.22—1744.29 [Reserved]

§ 1744.30 Act purposes.

(a) Borrowers are encouraged to submit requests for accommodation of the Government's lien on the borrower's system in order to facilitate obtaining financing from private lenders for purposes provided in the RE Act.

(b) The Administrator will consider requests for the subordination of the Government's lien on after-acquired property which will enable borrowers to obtain financing from private lenders for purposes provided in the Act: Provided, however, that property integral to the operation of projects financed with loans made or guaranteed by RUS shall be financed with funds obtained through lien accommodations instead of lien subordinations, unless the Administrator determines that it is in the Government's interest to do otherwise.

§§ 1744.31—1744.39 [Reserved]

§ 1744.40 Non-Act purposes.

(a) The Administrator will consider requests for the accommodation of the Government's lien on the borrower's system or the subordination of the Government's lien on after-acquired property which will enable the borrowers to obtain financing from private lenders for the purpose of providing new telecommunication services which may not be eligible for financing under the Act if the Administrator is satisfied that:

(1) The borrower will have the ability to repay its existing and proposed indebtedness;

(2) The security for outstanding Government loans and guarantees is reasonably adequate and will not be adversely affected by the accommodation or subordination; and

(3) Approval of the request is in the interests of the Government. Generally, it would not be in the Government's interest if the accommodation

or subordination is being requested to enable the borrower to avoid complying with such RUS policies or procedures, as competitive bid procedures or purchasing equipment acceptable to RUS, under 7 CFR part 1753.

(b) In determining that the security for outstanding Government loans and guarantees is reasonably adequate and will not be adversely affected by the accommodation or subordination the Administrator will consider, among other matters, when applicable, the following:

(1) Market forecasts for the project;

(2) Projected revenues, expenses and net income of the borrower's existing system and the project;

(3) Maximum debt service on indebtedness of both the borrower's system and the project;

(4) Projected rate of return on the borrower's investment in the project;

(5) Fair market value of property acquired by the borrower as part of the project;

(6) Impact of the project on the ratio of the borrower's secured debt to assets;

(7) Projected growth in borrower's system and project equity; and

(8) Amount of funds available for plant additions, replacements and other similar costs of the system and the project.

(c) In determining whether the accommodation or subordination is in the interests of the Government, the Administrator may consider, among other matters, whether the project will improve the borrower's financial strength and the assurance of repayment of Government debt.

[51 FR 32430, Sept. 12, 1986. Redesignated at 55 FR 39396, Sept. 27, 1990, and amended at 59 FR 43716, Aug. 25, 1994]

§§1744.41—1744.49 [Reserved]

§1744.50 Application procedures.

(a) Requests for information regarding applications for lien accommodations or subordination under this part should be addressed to the Assistant Administrator—Telephone Rural Utilities Service, Washington, DC 20250–1500.

(b) An application for a lien accommodation or subordination shall include the following supporting information:

(1) A board Resolution from the applicant requesting the lien accommodation or subordination and stating the general purpose for which the funds from the private lender will be used, the proposed amount of the loan, and the proposed terms and conditions of the loan;

(2) An opinion from counsel representing the applicant that the applicant has the authority under its articles of incorporation, bylaws, and under applicable state law to undertake the project;

(3) Engineering and pertinent studies related to the projects or purposes to be financed, when applicable;

(4) Feasibility studies with pro forma financial statements showing the ability to repay the loan and provide an appropriate margin or net income;

(5) Such information regarding the environmental impacts of the project as may be required pursuant to 7 CFR part 1794; and

(6) Any other information or documentation deemed pertinent by the borrower or the Administrator in support of the application.

(c) When the Administrator makes a determination that an application for an accommodation or subordination will not be approved the Administrator shall set forth the reasons therefor in writing and furnish such determination and reasons to the borrower within 30 days of the determination.

§§1744.51—1744.59 [Reserved]

Subpart C—Advance and Disbursement of Funds

SOURCE: 54 FR 12186, Mar. 24, 1989, unless otherwise noted. Redesignated at 55 FR 39396, Sept. 27, 1990.

§1744.60 General.

(a) The standard loan documents (as defined in 7 CFR part 1758) contain provisions regarding advances and disbursements of loan funds by telephone borrowers. This part implements certain of the provisions by setting forth

requirements and procedures to be followed by borrowers in obtaining advances and making disbursements of loan and nonloan funds.

(b) This part supersedes any sections of RUS Bulletins with which it is in conflict.

§ 1744.61 [Reserved]

§ 1744.62 Introduction.

RUS is under no obligation to make or approve advances of loan funds unless the borrower is in compliance with all terms and conditions of the loan documents. The borrower shall use funds in its construction fund only to make disbursements approved by RUS.

§ 1744.63 The telephone loan budget.

When the loan is made, RUS provides the borrower a Telephone Loan Budget, RUS Form 493. This budget divides the loan into budget accounts such as ''Engineering.'' When a contract or other document is approved by RUS, funds are encumbered from the appropriate budget account. See 7 CFR part 1753.

§ 1744.64 Budget adjustment.

(a) If more funds are required than are available in a budget account, the borrower may request RUS's approval of a budget adjustment to use funds from another account. The request shall include an explanation of the change, the budget account to be used, and a description of how the adjustment will affect loan purposes. RUS will not approve a budget adjustment that affects other loan purposes unless the borrower satisfies RUS that the additional funds are available from another source, requests a deficiency loan, or scales back the project.

(b) RUS may make a budget adjustment without a formal request by the borrower when a budget account is insufficient to encumber funds for a contract that otherwise would be approved by RUS. See 7 CFR part 1753.

§ 1744.65 The construction fund.

(a) The construction fund is used by the borrower primarily to hold advances until disbursed.

(b) All advances shall be deposited in the construction fund.

(c) RUS may require that other funds be deposited in the construction fund. These may include equity or general fund contributions to construction, service termination payments, proceeds from the sale of property, amounts recovered from insurance for losses during the construction period, and interest received on loan funds in savings or interest bearing checking accounts, and similar receipts. Deposit slips for any deposit to the construction fund shall show the source and amount of funds deposited and be executed by an authorized representative of the bank.

(d) Funds shall be disbursed only up to the amount approved for advance on the FRS as described in § 1744.66. No funds may be withdrawn from the fund except for loan purposes approved by RUS.

(e) The disbursement of nonloan funds requires the same RUS approvals as loan funds.

(f) Disbursements must be evidenced by canceled checks. The invoices and supporting documentation needed for construction contracts are specified in the contracts and in 7 CFR part 1753. Disbursements to reimburse the borrower's general funds shall be documented by a reimbursement schedule, *to be retained in the borrower's files,* that lists the construction fund check number, date, and an explanation of amounts reimbursed by budget account.

§ 1744.66 The financial requirement statement (FRS).

(a) To request advances, the borrower must submit to RUS an FRS, a description of the advances desired, and other information related to the transactions when required by RUS.

(b) The FRS is used by RUS and the borrower to record and control transactions in the construction fund. Approved contracts and other items are shown on the FRS under ''Approved Purposes.'' Except as noted below, the amount approved for advance is 100 percent of the amount encumbered for that item. Funds are approved for advance as follows:

(1) *Construction*—(i) *Construction contracts and force account proposals.* Ninety percent of the encumbered amount

(95 percent for outside plant), with the final 10 percent (5 percent) approved when RUS approves the closeout documents. When a contract contains supplement ''A'' (See 7 CFR part 1753), 90 percent (95 percent) of the contract is approved less materials supplied by the borrower. For the Supplement ''A'' materials, which are a separate entry on the FRS, 100 percent of the material cost is approved.

(ii) *Work orders.* The portion of the work order summary (See 7 CFR part 1753) determined by RUS to be for approved loan purposes.

(iii) *Work order fund.* Based on a borrower's request as described in 7 CFR part 1753.

(iv) *Real estate.* Upon request by the borrower after submission of evidence of a valid title.

(v) *Right of way procurement.* Based on the borrower's itemized costs.

(vi) *Joint use charges.* Based on copies of invoices from the other utility.

(2) *Engineering*—(i) *Preloan engineering.* Based on a final itemized invoice from the engineer.

(ii) *Postloan engineering contracts.* The amount shown on the engineering estimate, RUS Form 506, less the amount estimated for construction contract closeouts. The balance is approved when the engineering contract is closed.

(iii) *Force account engineering.* Ninety percent of the total amount of the RUS approved force account engineering proposal. The balance is approved when the force account engineering proposal is closed.

(3) *Office equipment, vehicles and work equipment.* Based on copies of invoices for the equipment.

(4) *General*—(i) *Organization and loan expenditures.* Based on an itemized list of requirements prepared by the borrower.

(ii) *Construction overhead.* Based on an itemized list of expenditures. If funds are required for employee salaries, the itemization shall include the employee's position, the period covered, total compensation for the period, and the portion of compensation attributable to the itemized construction.

(iii) *Legal fees.* Based on itemized invoices from the attorney.

(iv) *Bank stock.* Based on the requirements for purchase of class B Rural Telephone Bank stock established in the loan. Funds for class B stock will be advanced in an amount equal to 5 percent of the amount, exclusive of the amount for class B stock, of each loan advance, at the time of such advance.

(5) *Operating expenses*—(i) *Working capital—new system.* Based on the borrower's itemized estimate.

(ii) *Current operating deficiencies.* Based on a current and projected balance sheet submitted by the borrower.

(6) *Debt retirement and refinancing.* Upon release of the loan, based on the amount in the approved budget.

(7) *Acquisitions.* Based on final itemized costs, but cannot exceed the amount in the approved loan budget.

(c) Funds other than loan funds deposited in the construction fund, which shall include proceeds from the sale of property on which RUS has a lien, (lines 10 and 11 on the FRS) are reported as a credit under total disbursements. Disbursements of these funds are subject to the same RUS approvals as loan funds.

(d) The borrower shall request advances as needed to meet its obligations promptly. Generally, RUS does not approve an advance requested more than 60 days before the obligation is payable.

(e) Funds should be disbursed for the item for which they were advanced. If the borrower needs to pay an invoice for which funds have not been advanced, and disbursement of advanced funds for another item has been delayed, the latter funds may be disbursed to pay the invoice up to the amount approved for advance for that item on the FRS. The borrower shall make erasable entries on the next FRS showing the changes under ''Total Advances to Date'' and shall explain the changes in writing before RUS will process the next FRS.

(f) Advances will be rounded down to the nearest thousands of dollars except for final amounts.

(g) The certification on each of the three copies of the FRS sent to RUS shall be signed by a corporate officer of manager authorized by resolution of the board of directors to sign such

statements. At the time of such authorization a certified copy of the resolution and one copy of RUS Form 675, Certificate of Authority, shall be submitted to RUS.

(h) The documentation required for the FRS transactions are the deposit slips, the canceled construction fund checks and the supporting invoices or reimbursement schedules. These shall be kept in the borrower's files for periodic audits by RUS.

[54 FR 12186, Mar. 24, 1989. Redesignated at 55 FR 39396, Sept. 27, 1990, as amended at 56 FR 26600, June 10, 1991]

§ 1744.67 Temporary excess construction funds.

(a) When unanticipated events delay the borrower's disbursement of advanced funds, the funds may be used as follows:

(1) With RUS loan funds for loans approved prior to November 1, 1993, or hardship loan funds, the borrower may invest the funds in 5 percent Treasury Certificates of Indebtedness—RUS Series.

(2) With RUS cost-of-money, FFB or RTB loan funds, the following apply:

(i) The borrower may invest the funds in short term securities issued by the United States Treasury.

(ii) If permitted by state law, the borrower may deposit the funds in savings accounts, including certificates of deposit, of federally insured savings institutions.

(3) Funds advanced by a guaranteed lender other than the FFB may, if so permitted by such lender, be invested under the terms and conditions described above for FFB advances.

(4) Any security or investment made under this authorization shall identify the borrower by its corporate name followed by the words ''Trustee, Rural Utilities Service.''

(5) All temporary investments and all income derived from them shall be considered part of the construction fund and be subject to the same controls as cash in that account.

(6) Securities and other investments shall have maturity dates or liquidating provisions that ensure the availability of funds as required for the completion of projects and the payment of obligations.

(7) Any instrument evidencing a security or other investment herein authorized to be purchased or made, may not be sold, discounted, or pledged as collateral for a loan or as security for the performance of an obligation or for any other purpose.

(8) The Administrator may, at his sole discretion, require a borrower to pledge any security or other evidence of investment authorized hereby by forwarding to him all pertinent instruments and related documentation as he may reasonably require.

(9) Borrowers shall be responsible for the safekeeping of securities and other investments.

(b) All interest and income received from investments of temporary excess funds, as described in this section, shall be deposited in the Construction Fund.

(c) The borrower shall account for investment proceeds on the next FRS submitted to RUS. RUS will make the necessary adjustments on budgetary records.

(d) The Administrator reserves the right to suspend any borrower's authorization to invest temporary excess funds contained herein if the borrower does not comply with the requirements.

(e) For RUS loans approved prior to October 1, 1991, the borrower may return advanced funds to RUS as a refund of an advance. Interest stops accruing on the refunded advance upon receipt by RUS. A refunded advance may be readvanced. A refund of an advance shall be sent to the Rural Utilities Service, United States Department of Agriculture, Collections and Custodial Section, Washington, DC, 20250. The borrower should clearly indicate that this is a refund of an advance, and not a loan payment or prepayment.

[54 FR 12186, Mar. 24, 1989. Redesignated at 55 FR 39395, Sept. 27, 1990, and amended at 58 FR 66257, Dec. 20, 1993]

§ 1744.68 Order and method of advances of telephone loan funds.

(a) Borrowers may specify the sequence of advances of funds under any combination of approved telephone loans from RUS, RTB, or FFB, except that for all loans approved on or after

November 1, 1993, the borrower may use loan funds:

(1) Only for purposes for which that type of loan (i.e. Hardship, RUS cost-of-money, RTB, or FFB) may be made; and

(2) Only in exchanges that qualify for the type of loan from which the funds are drawn.

(b) The first or subsequent advances of loan funds may be conditioned on the satisfaction of certain requirements stated in the borrower's loan contract.

(c) Normally, only one payment is made by the Automatic Clearing House (ACH) for an advance of funds.

(d) Borrowers of RUS and RTB funds may request advances by wire service only for amounts greater than $500,000 or for advances to borrowers outside the Continental United States. FFB advances in any amount over $100,000 can be sent by wire service.

(e) The following information shall be included with the FRS:

(1) Name and address of borrower's bank.

(2) If borrower's bank is not a member of the Federal Reserve System, the name and address of its correspondent bank that is a member of the Federal Reserve System.

(3) American Bankers Association (ABA) nine digit identifier of the receiving banks (routing number and check digit).

(4) Borrower's bank account title and number.

(5) Any other necessary identifying information.

[54 FR 12186, Mar. 24, 1989. Redesignated at 55 FR 39395, Sept. 27, 1990, and amended at 58 FR 66257, Dec. 20, 1993]

§1744.69 [Reserved]

Subpart D—[Reserved]

Subpart E—Borrower Investments

SOURCE: 58 FR 52642, Oct. 12, 1993, unless otherwise noted.

§1744.200 General statement.

(a) RUS telephone borrowers are encouraged to utilize their own funds to participate in the economic development of rural areas, provided that such activity does not impair a borrower's ability to provide modern telecommunications services at reasonable rates or to repay its indebtedness to RUS and other lenders. When considering loans, investments, or guarantees, borrowers are expected to act in accordance with prudent business practices and in conformity with the laws of the jurisdictions in which they serve.

(b) This subpart E applies to both RUS and RTB borrowers. For the purposes of RTB borrowers, as used in this subpart E, if a borrower has received a loan from the RTB, RUS means RTB, and Administrator means Governor unless the text indicates otherwise.

§1744.201 Definitions.

As used in this subpart:

Administrator means the Administrator of the Rural Utilities Service (RUS) and, as provided in §1744.200(b), the Governor of the Rural Telephone Bank (RTB).

Advance means any funds provided of which repayment is expected.

Affiliated company means any organization that directly, or indirectly through one or more intermediaries, controls or is controlled by, or is under common control with, the borrower.

Borrower means any organization which has an outstanding loan made by RUS or RTB, or guaranteed by RUS, or which is seeking such financing.

Extension of credit means to make loans or advances.

Guarantee means to undertake collaterally to answer for the payment of another's debt or the performance of another's duty, liability, or obligation, including, without limitation, the obligations of affiliated companies. Some examples of such guarantees would include:

(1) Guarantees of payment or collection on a note or other debt instrument;

(2) Issuing performance bonds or completion bonds; or

(3) Cosigning leases or other obligations of third parties.

Maximum investment ratio means that the aggregate of all qualified investments by the borrower including the proposed qualified investment shall not

be more than one-third of the net worth of the borrower.

Minimum total assets ratio means the borrower's net worth is at least twenty percent of its total assets including the proposed qualified investment.

Net plant means the sum of the balances of the following accounts of the borrower:

Account Names	Number
(1) Telecommunications plant in service	2001
(2) Property held for future telecommunications use	2002
(3) Telecommunications plant under construction-short term	2003
(4) Telecommunications plant under construction-long term	2004
(5) Telecommunications plant adjustment	2005
(6) Nonoperating plant	2006
(7) Goodwill	2007
(8) Less accumulated depreciation	3100 through 3300s
(9) Less accumulated amortization	3400 through 3600s

NOTE: All references to account numbers are to the Uniform System of Accounts (47 CFR part 32).

Net worth means the sum of the balances of the following accounts of the borrower:

Account Names	Number
(1) Capital stock	4510
(2) Additional paid-in capital	4520
(3) Treasury stock	4530
(4) Other capital	4540
(5) Retained earnings	4550

NOTE: For nonprofit organizations, owners' equity is shown in subaccounts of 4540 and 4550. All references regarding account numbers are to the Uniform System of Accounts (47 CFR part 32).

Qualified investment is defined in § 1744.202(b).

RE Act means the Rural Electrification Act of 1936, as amended (7 U.S.C. 901 *et seq.*).

REA means the Rural Electrification Administration formerly an agency of the United States Department of Agriculture and predecessor agency to RUS with respect to administering certain electric and telephone loan programs.

RTB means the Rural Telephone Bank, an agency and instrumentality of the United States within the United States Department of Agriculture.

Rural development investment is defined in § 1744.202(d).

RUS means the Rural Utilities Service, an agency of the United States Department of Agriculture established pursuant to Section 232 of the Federal Crop Insurance Reform and Department of Agriculture Reorganization Act of 1994 (Pub. L. 103–354, 108 Stat. 3178), successor to REA with respect to administering certain electric and telephone programs. See 7 CFR 1700.1.

RUS mortgage means the instrument creating a lien on or security interest in the borrower's assets in connection with a loan made or guaranteed under the RE Act.

Total assets means the sum of the balances of the following accounts of the borrower:

Account Names	Number
(1) Current assets	1100s through 1300s
(2) Noncurrent assets	1400s through 1500s
(3) Total telecommunications plant	2001 through 2007
(4) Less accumulated depreciation	3100 through 3300s
(5) Less accumulated amortization	3400 through 3600s

NOTE: All references regarding account numbers are to the Uniform System of Accounts (47 CFR part 32).

Uniform System of Accounts means the Federal Communications Commission Uniform System of Accounts for Telecommunications Companies (47 CFR part 32) as supplemented by 7 CFR Part 1770, Accounting Requirements for RUS Telephone Borrowers.

[58 FR 52642, Oct. 12, 1993, as amended at 59 FR 66440, Dec. 27, 1994]

§ 1744.202 Borrowers may make qualified investments without prior approval of the Administrator.

(a) A borrower that equals or exceeds the minimum total assets ratio may make a qualified investment, defined in paragraph (b) of this section without prior written approval of the Administrator.

(b) A qualified investment is a rural development investment, defined in paragraph (d) of this section meeting the following criteria:

(1) Unless the borrower's commitment is a guarantee, extension of credit, or advance, the borrower receives any financial return accruing to such investment, or the borrower's proportionate share of such return;

(2) Unless the borrower's commitment is a guarantee, extension of credit, or advance, the borrower retains title to any asset acquired with such

investment, or the borrower's proportionate share of such title; and

(3) The funds committed are the borrower's own funds. As used in this subpart, the term own funds shall not include proceeds of loans made, guaranteed or lien accommodated by RUS; funds necessary to make timely payments of principal and interest on loans made, guaranteed or lien accommodated by RUS; and funds on deposit in the cash construction fund-trustee account, as defined in the borrower's loan contract with RUS.

(c) A rural development investment will not be considered to be a qualified investment to the extent that the amount of such investments exceeds the borrower's maximum investment ratio.

(d) A rural development investment is an investment, extension of credit, advance, or guarantee by a borrower for a period longer than one year and for one or more of the following purposes:

(1) Improve the economic well-being of rural residents and alleviate the problems of low income, elderly, minority, and otherwise disadvantaged rural residents;

(2) Improve the business and employment opportunities, occupational training and employment services, health care services, educational opportunities, energy utilization and availability, housing, transportation, community services, community facilities, water supplies, sewage and solid waste management systems, credit availability, and accessibility to and delivery of private and public financial resources in the maintenance and creation of jobs in rural areas;

(3) Improve state and local government management capabilities, institutions, and programs related to rural development and expand educational and training opportunities for state and local officials, particularly in small rural communities;

(4) Strengthen the family farm system; or

(5) Maintain and protect the environment and natural resources of rural areas.

(e) As used in paragraph (d) of this section, the term rural development investment shall include investments by a borrower in its own name, in affiliated companies, and in entities not affiliated with the borrower.

§1744.203 Establishing amount of rural development investment.

For purposes of determining whether a rural development investment is within the limits of the borrower's maximum investment ratio or the minimum total assets ratio, the amount of the qualified investment shall be the total amount of funds committed to the rural development project as of the date of determination. The total amount of funds committed to the rural development project includes:

(a) The principal amount of loans and advances made by the borrower;

(b) Guarantees made by the borrower; and

(c) A reasonable estimate of the amount the borrower is committed to provide to the rural development project in future years.

§1744.204 Rural development investments that do not meet the ratio requirements.

(a) Each borrower is authorized to make investments other than qualified investments only in accordance with the provisions of the borrower's mortgage with RUS. Without RUS's approval, the portion of any investment of funds or commitment to invest funds for any rural development investment that will exceed the borrower's maximum investment ratio or cause the borrower to fall below the minimum total assets ratio, must comply with the provisions of the RUS mortgage.

(b) RUS will consider, on a case-by-case basis, requests for approval of rural development investments not constituting qualified investments. RUS may condition such approval, if granted, on such requirements and restrictions as RUS may determine to be in the best interests of the Government, including, without limitation, the borrower's agreement to limit dividends or distributions of capital by an amount specified by RUS. Requests for such approvals must be submitted in writing to the relevant RUS regional office and shall include:

(1) A description of the rural development project and the type of investment to be made, such as a loan, guarantee, stock purchase or equity investment;

(2) A reasonable estimate of the amount the borrower is committed to provide to the rural development project including investments that may be required in the future; and

(3) A pro forma balance sheet and cash flow statement for the period covering the borrower's future commitments to the rural development project.

(c) In determining whether to approve a rural development investment that may cause the borrower to exceed the maximum investment ratio or to fall below the minimum total assets ratio in the future, RUS will consider annual increases to the borrower's net worth and total assets as might be reasonably anticipated from the borrower's normal operations.

§ 1744.205 Determinations and application of limitations described in § 1744.202.

(a) RUS will not include qualified investments, including qualified investments in affiliated companies, in calculating the amount of dividend or capital distributions a borrower may make under its RUS mortgage.

(b) A borrower's investment in its net plant shall not be considered a rural development investment for purposes of calculating the maximum investment ratio or the minimum total assets ratio.

(c) The borrower's net worth and total assets shall be determined using the balances of the respective accounts of the borrower as of December 31 of the last complete calendar year preceding the date on which the borrower's maximum investment ratio and minimum total assets ratio are calculated.

(d) All determinations required to be made under 7 U.S.C. 926 or this subpart will be made in accordance with the Uniform System of Accounts (USoA)(47 CFR part 32). References to specific USoA accounts shall include revised or replacement accounts.

§ 1744.206 Effect of subsequent failure to maintain ratios.

If an expenditure constitutes a qualified investment under the terms of this subpart, it does not cease to be a qualified investment merely because subsequently the borrower fails to maintain the maximum investment ratio or the minimum total assets ratio.

§ 1744.207 Investment not to jeopardize loan security.

A borrower shall not make a qualified investment or a rural development investment which jeopardizes:

(a) The security of loans made or guaranteed by RUS; or

(b) The borrower's ability to repay such loans under the terms and conditions as agreed.

§ 1744.208 Rural development investments before November 28, 1990.

All investments made by a borrower shall be subject to the provisions of this subpart, regardless of when the investment was made or whether it has been approved by RUS. Any restrictions required by RUS as a condition to approving a rural development investment before November 28, 1990, shall continue to be in effect to the extent that such investment exceeds the maximum investment ratio or causes the borrower to fall below the minimum total assets ratio.

§ 1744.209 Records.

(a) The records of borrowers, including records relating to qualified investments, shall be subject to the auditing procedures prescribed in part 1773 of this chapter. RUS reserves the right to review the records of the borrower relating to qualified investments to determine if the borrower is in compliance with this subpart.

(b) Borrowers shall report to RUS on the end-of-year operating report, RUS Form 479, the current status and principal amount of each qualified investment it has made or is committed to make pursuant to § 1744.202.

(Approved by the Office of Management and Budget under control number 0572–0098.)

§1744.210 Effect of this subpart on RUS loan contract and mortgage.

(a) Except as expressly provided in this subpart, the borrower shall comply with all provisions of its loan contract with RUS, its notes issued to RUS, and the RUS mortgage, including all provisions thereof relating to investments not covered by this subpart.

(b) Nothing in this subpart shall affect any rights of supplemental lenders under the RUS mortgage, or other creditors of the borrower, to limit a borrower's investments, loans and guarantees to levels below those permitted in §1744.202.

(c) As used in paragraph (b) of this section, supplemental lender means a creditor of the borrower, other than RUS, whose loan to the borrower is secured by the RUS mortgage.

PART 1748—POST-LOAN POLICIES AND PROCEDURES FOR INSURED TELEPHONE LOANS [RESERVED]

PART 1751—TELECOMMUNICATIONS SYSTEM PLANNING AND DESIGN CRITERIA, AND PROCEDURES

Subpart A—[Reserved]

Sec.
1751.1—1751.99 [Reserved]

Subpart B—State Telecommunications Modernization Plan

1751.100 Definitions.
1751.101 General.
1751.102 Modernization Plan Developer; eligibility.
1751.103 Loan and loan advance requirements.
1751.104 Obtaining RUS approval of a proposed Modernization Plan.
1751.105 Amending a Modernization Plan.
1751.106 Modernization Plan; requirements.

AUTHORITY: 7 U.S.C. 901 *et seq.*, 1921 *et seq.*; Pub. L. 103–354, 108 Stat. 3178 (7 U.S.C. 6941 *et seq.*).

SOURCE: 60 FR 8174, Feb. 13, 1995, unless otherwise noted.

Subpart A—[Reserved]

§§1751.1—1751.99 [Reserved]

Subpart B—State Telecommunications Modernization Plan

§1751.100 Definitions.

As used in this subpart:

Bit rate. The rate of transmission of telecommunications signals or intelligence in binary (two state) form in bits per unit time, e.g., Mb/s (megabits per second), kb/s (kilobits per second), etc.

Borrower. Any organization that has received an RUS loan designation number and which has an outstanding telephone loan made by RUS or the Rural Telephone Bank, or guaranteed by RUS, or which has a completed loan application with RUS.

Emerging technologies. New or not fully developed methods of telecommunications.

Modernization Plan (State Telecommunications Modernization Plan). A State plan, which has been approved by RUS, for improving the telecommunications network of those Telecommunications Providers covered by the plan. A Modernization Plan must conform to the provisions of this subpart.

New facilities. Facilities which are wholly or partially constructed or reconstructed after a short- or medium-term requirements start date, as appropriate. This does not include connections or capacity extensions within the wired capacity of existing plant such as adding line cards to existing equipment.

Plan Developer. The entity creating the Modernization Plan for the State, which may be the State PUC, the State legislature, or a numeric majority of the RUS Borrowers within the State. When this part refers to the PUC as the Plan Developer, this includes the State legislature.

PUC (Public Utilities Commission). The public utilities commission, public service commission or other State body

with such jurisdiction over rates, service areas or other aspects of the services and operation of providers of telecommunications services as vested in the commission or other body authority, to the extent provided by the State, to guide development of telecommunications services in the State. When this part refers to the PUC as the Plan Developer, this includes the State legislature.

RE Act. The Rural Electrification Act of 1936, as amended (7 U.S.C. 901 *et seq.*).

REA. The Rural Electrification Administration, formerly an agency of the United States Department of Agriculture and predecessor agency to RUS with respect to administering certain electric and telephone loan programs.

RELRA. The Rural Electrification Loan Restructuring Act of 1993 (107 Stat. 1356).

RUS. The Rural Utilities Service, an agency of the United States Department of Agriculture established pursuant to Section 232 of the Federal Crop Insurance Reform and Department of Agriculture Reorganization Act of 1994 (Pub. L. 103–354, 108 Stat. 3178 (7 U.S.C. 6941 *et seq.*)), successor to REA with respect to administering certain electric and telephone programs. See 7 CFR 1700.1.

RUS cost-of-money loan. A loan made under section 305(d)(2) of the RE Act bearing interest as determined under 7 CFR 1735.31(c). RUS cost-of-money loans are made concurrently with RTB loans.

RUS hardship loan. A loan made by RUS under section 305(d)(1) of the RE Act bearing interest at a rate of 5 percent per year.

RTB loan. A loan made by the Rural Telephone Bank (RTB) under section 408 of the RE Act bearing interest as determined under 7 CFR 1610.10. RTB loans are made concurrently with RUS cost-of-money loans.

State. Each of the 50 states of the United States, the District of Columbia, and the territories and insular possessions of the United States. This does not include countries in the Compact of Free Association.

Telecommunications. The transmission or reception of voice, data, sounds, signals, pictures, writings, or signs of all kinds, by wire, fiber, radio, light, or other visual or electromagnetic means.

Telecommunications providers. RUS Borrowers and if the Plan Developer is a PUC, such other entities providing telecommunications services as the developer of the Modernization Plan (See § 1751.101) may determine.

Wireline Service. Telecommunications service provided over telephone lines. It is characterized by a wire or wirelike connection carrying electricity or light between the subscriber and the rest of the telecommunications network. Wireline Service implies a physical connection. Although radio may form part of the circuit, it is not the major method of transmission as in radiotelephone.

§ 1751.101 General.

(a) It is the policy of RUS that every State have a Modernization Plan which provides for the improvement of the State's telecommunications network.

(b) A proposed Modernization Plan must be submitted to RUS for approval. RUS will approve the proposed Modernization Plan if it conforms to the provisions of this subpart. Once obtained, RUS's approval of a Modernization Plan cannot be rescinded.

(c) The Modernization Plan shall not interfere with RUS's authority to issue such other telecommunications standards, specifications, requirements, and procurement rules as may be promulgated from time to time by RUS including, without limitation, those set forth in 7 CFR part 1755.

(d) The Modernization Plan must, at a minimum, apply to RUS Borrowers' wireline service areas. If a Modernization Plan is developed by the PUC, RUS encourages, but does not require, that the Modernization Plan's requirements apply to the rural service areas of all providers of telecommunications services in the State. A PUC's decision not to include non-RUS Borrowers will not prejudice RUS approval of that PUC's Modernization Plan. The PUC may also, at its option, extend coverage of the Modernization Plan to all service areas of all providers of telecommunications services in the State. In addition, while the requirements and goals contained in § 1751.106 apply only to wireline services, the PUC, at

its discretion, may extend coverage of Modernization Plans to wireless or other communications services in the State as it deems appropriate. Borrower-developed Modernization Plans apply only to Borrowers.

§1751.102 Modernization Plan Developer; eligibility.

(a) Each PUC is eligible until February 13, 1996 to develop a proposed Modernization Plan and deliver it to RUS. RUS will review and consider for approval all PUC-developed Modernization Plans received by RUS within this one year period. The review and approval, if any, may occur after the one year period ends even though the PUC is no longer eligible to submit a proposed Modernization Plan.

(b) The PUC must notify all Telecommunications Providers in the State and other interested parties of its intent to develop a proposed Modernization Plan. The PUC is encouraged to consider all Telecommunications Providers' and interested parties' views and incorporate these views into the Modernization Plan. In the event that the PUC does not intend to develop a proposed Modernization Plan, RUS requests that the PUC inform RUS of this decision as soon as possible.

(c)(1) If the PUC is no longer eligible to develop a Modernization Plan or has informed RUS that it will not develop a Modernization Plan, as described in paragraphs (a) and (b) of this section, a majority of the Borrowers within the State may develop the Modernization Plan. If a majority of Borrowers develops the Modernization Plan, the following apply:

(i) All Borrowers shall be given reasonable notice of and shall be encouraged to attend and contribute to all meetings and other proceedings relating to the development of the Modernization Plan; and

(ii) Borrowers developing a Modernization Plan are encouraged to solicit the views of other providers of telecommunications services and interested parties in the State.

(2) There is no time limit placed on Borrowers to develop a Modernization Plan. Borrowers should be aware that certain types of loans may be restricted until a Modernization Plan is approved. See §1751.103.

§1751.103 Loan and loan advance requirements.

(a) For information about loan eligibility requirements in relation to the Modernization Plan, see 7 CFR part 1735. In particular, beginning February 13, 1996, RUS will make RUS hardship loans, RUS cost-of-money loans, and RTB loans for facilities and other RE Act purposes in a State only if:

(1) The State has an RUS approved Modernization Plan; and

(2) The Borrower to whom the loan is to be made is participating in the Modernization Plan for the State. A Borrower is considered to be participating if, in RUS's opinion, the purposes of the loan requested by the Borrower are consistent with the Borrower achieving the requirements stated in the Modernization Plan within the timeframe stated in the Modernization Plan unless RUS has determined that achieving the requirements is not technically or economically feasible.

(b) With regard to the three types of loans discussed in paragraph (a), only loans approved after the date the State has an RUS approved Modernization Plan are subject to complying with the Modernization Plan.

(c) For loans subject to complying with the Modernization Plan, advances will not be made if, in RUS's opinion, the advances are not consistent with achieving the requirements of the Modernization Plan.

§1751.104 Obtaining RUS approval of a proposed Modernization Plan.

(a) To obtain RUS approval of a proposed Modernization Plan, the Plan Developer must submit the following to RUS:

(1) A certified copy of the statute or PUC order, if the PUC is the Plan Developer, or a written request for RUS approval of the proposed Modernization Plan signed by an authorized representative of the Plan Developer, if a majority of Borrowers is the Plan Developer; and

(2) Three copies of the proposed Modernization Plan.

(b) Generally, RUS will review the proposed Modernization Plan within (30) days and either:

(1) Approve the Modernization Plan if it conforms to the provisions of this subpart in which case RUS will return a copy of the Modernization Plan with notice of approval to the Plan Developer; or

(2) Not approve the proposed Modernization Plan if it does not conform to the provisions of this subpart. In this event, RUS will return the proposed Modernization Plan to the Plan Developer with specific written comments and suggestions for modifying the proposed Modernization Plan so that it will conform to the provisions of this subpart. If the Plan Developer remains eligible, RUS will invite the Plan Developer to submit a modified proposed Modernization Plan for RUS consideration. This process can continue until the Plan Developer gains approval of a proposed Modernization Plan unless the Plan Developer is a PUC whose eligibility has expired. If a PUC's eligibility has expired, RUS will return the proposed Modernization Plan unapproved. Because RUS does not have authority to extend the term of a PUC's eligibility, RUS recommends that the PUC submit a proposed Modernization Plan at least 90 days in advance of February 13, 1996 to allow time for this process.

§ 1751.105 Amending a Modernization Plan.

(a) RUS understands that changes in standards, technology, regulation, and the economy could indicate that an RUS-approved Modernization Plan should be amended.

(b) The Plan Developer of the Modernization Plan may amend the Modernization Plan if RUS finds the proposed changes continue to conform to the provisions of this subpart.

(c) The procedure for requesting approval of an amended Modernization Plan is identical to the procedure for a proposed Modernization Plan except that there are no time limits on the eligibility of the Plan Developer.

(d) The existing Modernization Plan remains in force until RUS has approved the proposed amended Modernization Plan.

(e) RUS may from time to time revise these regulations to incorporate newer technological and economic standards that RUS believes represent more desirable goals for the future course of telecommunications services. Such revisions will be made in accordance with the Administrative Procedure Act. These revisions shall not invalidate Modernization Plans approved by RUS but shall be used by RUS to determine whether to approve amendments to Modernization Plans presented for RUS approval after March 15, 1995.

§ 1751.106 Modernization Plan; requirements.

(a) The requirements for a Modernization Plan as stated in RELRA are:

(1) The plan must provide for the elimination of party line service.

(2) The plan must provide for the availability of telecommunications services for improved business, educational, and medical services.

(3) The plan must encourage and improve computer networks and information highways for subscribers in rural areas.

(4) The plan must provide for—

(i) Subscribers in rural areas to be able to receive through telephone lines—

(A) Conference calling;

(B) Video images; and

(C) Data at a rate of at least 1,000,000 bits of information per second; and

(ii) The proper routing of information to subscribers.

(5) The plan must provide for uniform deployment schedules to ensure that advanced services are deployed at the same time in rural and nonrural areas.

(6) The plan must provide for such additional requirements for service standards as may be required by the Administrator.

(b) To implement the requirements of the law described in paragraph (a) of this section, RUS has set minimum requirements as described in paragraphs (i) and (j) of this section. They are grouped into short-term and medium-term requirements. RUS has also included long-term goals which are not requirements. The Modernization Plan

must meet all of the statutory requirements of RELRA and shall provide that short- and medium-term requirements be implemented as set forth in this section of the regulation except that the PUC, if it is the Plan Developer, or RUS, if a majority of Borrowers is the Plan Developer, may approve extensions of time if the required investment is not economically feasible or if the best available telecommunications technology lacks the capability to enable the Telecommunications Provider receiving the extension to comply with the Modernization Plan. Extensions shall be granted only on a case-by-case basis and generally shall not exceed a total of five years from the first such extension granted to the Telecommunications Provider.

(c) Each State's Modernization Plan shall be a strategic development proposal for modernizing the telecommunications network of the Telecommunications Providers covered by the Modernization Plan. In addition to implementing the requirements described in paragraphs (a), (i), and (j) of this section, the Modernization Plan shall include a short engineering description of the characteristics of a future telecommunications structure that would enable all Telecommunications Providers to achieve the requirements and goals of the Modernization Plan.

(d) Within the scope of §1751.101(d), if the Plan Developer is the PUC, the Modernization Plan shall name the Telecommunications Providers in the State, in addition to Borrowers, that are covered by the Modernization Plan.

(e) The Modernization Plan must require that the design of the network provided by Telecommunications Providers allow for the expeditious deployment and integration of such emerging technologies as may from time to time become commercially feasible.

(f) The Modernization Plan must provide guidelines to Telecommunications Providers for the development of affordable tariffs for medical links and distance learning services.

(g) With regard to the uniform deployment requirement of the law restated in paragraph (a)(5) of this section, if services cannot be deployed at the same time, only the minimum feasible interval of time shall separate availability of the services in rural and nonrural areas.

(h) The Modernization Plan must make provision for reliable powering of ordinary voice telephone service operating over those portions of the telecommunications network which are not network powered. In the event of electric utility power outages, an alternative source of power must be available to ensure reliable voice service.

(i) *Short-term requirements.* (1) The ''short-term requirements start date'' is the date one year after the date RUS approves the Modernization Plan for the State.

(2) All New Facilities providing Wireline Service after the short-term requirements start date, even if the construction began before such date, shall be constructed so that:

(i) Every subscriber can be provided 1-party service.

(ii) The New Facilities are suitable, as built or with additional equipment, to provide transmission and reception of data at a rate no lower than 1 Mb/sec.

(3) All switching equipment installed by a Telecommunications Provider after the short-term requirements start date shall be capable of:

(i) Providing custom calling features. At a minimum, custom calling features must include call waiting, call forwarding, abbreviated dialing, and three-way calling; and

(ii) Providing E911 service for areas served by the Telecommunication Provider when requested by the government responsible for this service.

(j) *Medium-term requirements.* (1) The ''medium-term requirements start date'' is the date six years after the date RUS approves the Modernization Plan for the State, or such earlier date as the Modernization Plan shall provide.

(2) All New Facilities providing Wireline Service after the medium-term requirements start date, even if the construction began before such date, shall be capable, as built or with additional equipment, of transmitting video to a subscriber. The video must be capable of depicting a reasonable representation of motion. The frame rate, resolution, and other measures of

audio and video quality shall be determined by the Plan Developer.

(3) No later than the medium-term requirements start date, all switching equipment of Telecommunications Providers covered by the Modernization Plan must be capable of providing E911 service when requested by the government responsible for this service.

(4) No later than five years after the medium-term requirements start date, one-party service must be provided upon demand to any subscriber of a Telecommunications Provider covered by the Modernization Plan.

(k) *Long-term goals.* RUS suggests, but does not require, that the provisions of each Modernization Plan be consistent with the accomplishment of the following:

(1) The elimination of party line service.

(2) For subscribers that desire the service, universal availability of:

(i) Digital voice and data service (56–164 kb/sec).

(ii) Service that provides transmission and reception of high bit rate (no less than 1 Mb/sec) data.

(iii) Service that provides reception of video as described in paragraph (j)(2) of this section.

PART 1753—TELECOMMUNICATIONS SYSTEM CONSTRUCTION POLICIES AND PROCEDURES

Subpart A—General

Sec.
1753.1 General.
1753.2 Definitions.
1753.3 Preconstruction review.
1753.4 Major and minor construction.
1753.5 Methods of major construction.
1753.6 Standards, specifications, and general requirements.
1753.7 Plans and specifications (P&S).
1753.8 Contract construction procedures.
1753.9 Subcontracts.
1753.10 Preconstruction conference.
1753.11 Contract amendments.
1753.12—1753.14 [Reserved]

Subpart B—Engineering Services

1753.15 General.
1753.16 Architectural services.
1753.17 Engineering services.
1753.18—1753.20 [Reserved]

Subpart C—[Reserved]

Subpart D—Construction of Buildings

1753.25 General.
1753.26 Plans and specifications (P&S).
1753.27 Bidding procedure.
1753.28 Contract amendments.
1753.29 Force account procedures.
1753.30 Closeout procedures.
1753.31—1753.35 [Reserved]

Subpart E—Purchase and Installation of Central Office Equipment

1753.36 General.
1753.37 Plans and specifications (P&S).
1753.38 Procurement procedures.
1753.39 Closeout documents.
1753.40—1753.45 [Reserved]

Subpart F—Outside Plant Major Construction by Contract

1753.46 General.
1753.47 Plans and specifications (P&S).
1753.48 Procurement procedures.
1753.49 Closeout documents.
1753.50 Construction by Form 773 contract.
1753.51—1753.55 [Reserved]

Subpart G—Outside Plant Major Construction by Force Account

1753.56 General.
1753.57 Procedures.
1753.58 Closeout documents.
1753.59—1753.65 [Reserved]

Subpart H—Purchase and Installation of Special Equipment

1753.66 General.
1753.67 Contracts and specifications.
1753.68 Purchasing special equipment.
1753.69—1753.75 [Reserved]

Subpart I—Minor Construction

1753.76 General.
1753.77 Methods of minor construction.
1753.78 Construction by contract.
1753.79 Construction by force account.
1753.80 Minor construction procedure.
1753.81 Inspection and certification.
1753.82 Minor construction closeout.
1753.83—1753.90 [Reserved]

Subpart J—Construction Certification Program

1753.91 General.
1753.92 Policies and requirements.
1753.93 Responsibilities.
1753.94 Procedures.
1753.95 Advance of loan funds.
1753.96 Certification addendum.
1753.97—1753.99 [Reserved]

APPENDIX A TO PART 1753—DOCUMENTS REQUIRED TO CLOSEOUT CONSTRUCTION OF BUILDINGS
APPENDIX B TO PART 1753—DOCUMENTS REQUIRED TO CLOSEOUT CENTRAL OFFICE EQUIPMENT CONTRACT
APPENDIX C TO PART 1753—DOCUMENTS REQUIRED TO CLOSEOUT TELEPHONE CONSTRUCTION CONTRACT RUS FORM 515
APPENDIX D TO PART 1753—STEP-BY-STEP PROCEDURE FOR CLOSING OUT TELEPHONE CONSTRUCTION CONTRACT—LABOR AND MATERIALS, RUS FORM 515
APPENDIX E TO PART 1753—DOCUMENTS REQUIRED TO CLOSEOUT FORCE ACCOUNT OUTSIDE PLANT CONSTRUCTION
APPENDIX F TO PART 1753—DOCUMENTS REQUIRED TO CLOSEOUT EQUIPMENT CONTRACTS

AUTHORITY: 7 U.S.C. 901 *et seq.*; 7 U.S.C. 1921 *et seq.*; Pub. L. 103–354, 108 Stat. 3178 (7 U.S.C. 6941 *et seq.*).

EDITORIAL NOTE: Nomenclature changes to part 1753 appear at 55 FR 39397, Sept. 27, 1990.

Subpart A—General

SOURCE: 54 FR 39267, Sept. 25, 1989, unless otherwise noted. Redesignated at 55 FR 39396, Sept. 27, 1990.

§1753.1 General.

(a) The standard RUS Telephone Loan Documents contain provisions regarding procurement of materials and equipment and construction of telecommunication facilities by telephone borrowers. This part 1753 implements certain of the provisions by setting forth the requirements and procedures to be followed by borrowers for purchasing materials and equipment and construction of telecommunication facilities by contract or force account.

(b) The typical procedure followed in constructing a project financed by an RUS loan begins with the prospective borrower obtaining the necessary preloan engineering and developing a complete loan application, including an LD (See 7 CFR part 1737). If a loan is approved and all prerequisites to advance of funds are satisfied, the borrower may proceed with the purchase and installation of materials and equipment and the construction of telephone facilities pursuant to this part 1753. Subpart A describes

(1) RUS's general requirements with respect to steps to be taken after the loan is approved and before construction begins (See §1753.3),

(2) RUS requirements with respect to methods of construction (See §§1753.5 and 1753.6),

(3) RUS requirements regarding sealed competitive bidding and negotiated bidding of construction contracts (See §§1753.6 and 1753.9),

(4) RUS standards for materials, equipment, and construction financed with loan funds (See §1753.7), and

(5) RUS requirements for subcontracts and contract amendments covering construction financed with loan funds (See §§1753.10 and 1753.12).

(c) Each borrower is responsible for the construction of its facilities and for the procurement of materials and equipment that are best suited to its needs.

(d) If contracts, P&S, or other methods of procurement are subject to RUS approval pursuant to the provisions of the loan contract, as implemented by this part, RUS will review the documents or proposals submitted and notify the borrower in writing of approval or disapproval. RUS may withhold approval if, in RUS's judgment:

(1) The P&S or contract will not accomplish loan purposes.

(2) Provisions of the P&S or contract will add unnecessary expense to the project.

(3) The proposal, method of procurement, or P&S do not conform to RUS engineering criteria or construction standards, or if they present unacceptable loan security risks to RUS.

(4) The P&S or contract have been modified.

(e) The requirements and procedures covering procurement of architectural and engineering services are described in subpart B of this part.

(f) Single copies of RUS forms cited in this part are available from Administrative Services Division, Rural Utilities Service, United States Department of Agriculture, Washington, DC 20250–1500. These RUS forms may be reproduced.

§1753.2 Definitions.

For the purpose of this part 1753:

Alternate— A solicitation for a bid adjustment for a specified deviation from the Plans and Specifications.

Architect— A person registered as an architect in the state where construction is performed, or a person on the borrower's staff, approved by RUS, authorized to perform architectural services.

Bid guarantee— A bid bond or certified check required of contractors bidding on construction work to ensure that the bidder, if successful, will furnish a satisfactory performance bond ensuring completion of work.

Central office building— The facility housing the central office equipment.

Central office equipment— Switching and signaling equipment that performs call origination and completion functions for subscribers.

Closeout documents— The documents required to certify satisfactory completion of all obligations under a contract or force account proposal.

Construction— Purchase and installation of telecommunications facilities in a borrower's system using loan funds.

Contract— The agreement between the borrower and an independent contractor covering the purchase, construction, or both of telephone facilities to be included in the borrower's telephone system.

Contract construction— Construction and installations performed using an RUS contract form. See 7 CFR 1755.93.

Engineer— A person registered as an engineer in the state where construction is performed, or a person on the borrower's staff, approved by RUS, authorized to perform engineering services.

FAP (force account proposal)—The borrower's detailed plans submitted to RUS for force account construction.

Force account construction—Construction performed by the borrower's employees under an RUS approved FAP, with the borrower furnishing all materials, equipment, tools, and transportation.

FRS—RUS Form 481 (OMB control number 0572–0023), Financial Requirement Statement.

GFR—RUS General Field Representative.

Installation—The act of setting up or placing in position equipment for service or use in the borrower's system.

Interim construction—The purchase of equipment or the conduct of construction under an RUS-approved plan of interim financing. See 7 CFR part 1737.

Interim financing—Funding for a project which RUS has acknowledged may be included in a loan, should said loan be approved, but for which RUS loan funds have not yet been made available.

Labor and materials—All the labor and materials required for construction.

LD (loan design)—Supporting data for a loan application. See 7 CFR part 1737.

Loan—Any loan made or guaranteed by RUS. See 7 CFR part 1735.

Loan funds—Funds provided by RUS through direct or guaranteed loans. See 7 CFR part 1744 subpart C.

Major construction—A telephone plant project estimated to cost more than $100,000, including all labor and materials.

Minor construction—A telephone plant project estimated to cost $100,000 or less, including all labor and materials.

Minor errors or irregularities—A defect or variation in a seller's bid that is a matter of form and not of substance. Errors or irregularities are ''minor'' if they can be corrected or waived without being prejudicial to other bidders and when they do not affect the price, quantity, quality, or timeliness of construction. Unless otherwise noted, the borrower determines whether an error or irregularity is ''minor.''

Modernization plan. A plan, which has been approved by RUS, for improving the public switched network of a state. The modernization plan must conform to the provisions of 7 CFR part 1751, subpart B, and applies to all telecommunications providers in the state.

Negotiation—Any form of purchasing or contracting other than sealed competitive bidding. Any contract awarded without using the sealed competitive bidding procedure is a negotiated contract.

Outside plant—The facilities that conduct electrical or optical signals between the central office and the subscriber's network interface or between central offices.

Performance bond—A surety bond on a form satisfactory to RUS guaranteeing

the contractor's faithful performance of a contract.

P&S (plans and specifications)—An RUS contract form, the appropriate specifications, and such additional information and documents needed to provide a clear, accurate, and complete understanding of the installations to be made or construction to be performed.

Project—The construction or installation described in the P&S.

Responsive bid—A bid that complies with the requirements of the plans and specifications.

Sealed competitive bidding—A method of contracting that employs sealed competitive bids, public opening of bids, and award of the contract to the bidder submitting the lowest responsive bid. See §1753.8.

Single source negotiation—Negotiating with a single source (contractor or seller).

Special equipment—Equipment used primarily for the transmission and enhancement of voice, data, carrier, radio and light signals, and other equipment and facilities, including incidental cable and other transmission equipment.

Subcontract—A secondary contract undertaking some of the obligations of a primary contract. Under all RUS forms of contract, the primary contractor bears full responsibility for the performance of the subcontractor.

Unbalanced bid—A bid which contains pricing for a task or material that is significantly higher or lower than pricing for similar tasks or materials.

Work order construction—Minor construction performed by the borrower's employees, pursuant to its work order procedure, with the borrower furnishing all materials, equipment, tools, and transportation.

[54 FR 39267, Sept. 25, 1989, unless otherwise noted. Redesignated at 55 FR 39396, Sept. 27, 1990, and amended at 58 FR 66259, Dec. 20, 1993; 59 FR 17464, Apr. 13, 1994]

§1753.3 Preconstruction review.

(a) Prior RUS approval must be obtained for any construction that does not conform to RUS standards and specifications or the approved LD, such as construction of extensions to serve subscribers in areas not included in the LD (See 7 CFR part 1737). For loans approved after RUS approval of the modernization plan in the borrower's state, the proposed construction must conform to the modernization plan, as required by 7 CFR part 1751, subpart B. To obtain approval, the borrower shall submit a written proposal containing:

(1) A description of the work, indicating any deviations from the approved LD or RUS standards and specifications.

(2) An engineering study covering the deviations if there are changes in the design.

(3) A cost estimate for labor, engineering, materials, and overheads.

(4) If applicable, a brief analysis from the borrower demonstrating that the proposed changes conform to the modernization plan.

(b) Before any construction, including interim construction, is initiated, the GFR shall meet with the borrower to review the LD to determine if any significant changes have occurred since its approval by RUS. It is important that the design and construction of the proposed facilities be based on the latest information on subscriber needs.

(c) If the borrower and GFR agree that there have been no significant changes, the borrower may proceed.

(d) If the GFR finds that the LD is no longer satisfactory, the borrower shall prepare an amendment to the LD incorporating the necessary revisions (See 7 CFR part 1737). The borrower must obtain RUS approval of the LD amendment before proceeding with engineering activities on any project to be financed with loan funds.

[54 FR 39267, Sept. 25, 1989. Redesignated at 55 FR 39396, Sept. 27, 1990, and amended at 58 FR 66259, Dec. 20, 1993; 59 FR 17464, Apr. 13, 1994]

§1753.4 Major and minor construction.

RUS's general requirements for construction are set forth in this subpart A. Additional requirements and procedures for different types of major construction are presented in subparts D, E, F, G, and H (OMB control number 0572–0062). The requirements and procedures for minor construction are presented in subpart I. Borrowers may, at their option, follow the procedures in

subparts D, E, F, G, and H for any minor construction.

§ 1753.5 Methods of major construction.

(a) All major construction projects financed by loan funds shall be performed pursuant to a contract approved by RUS and awarded through sealed competitive bidding unless

(1) A specific exception is granted in subparts D, E, F, G, or H, or

(2) Written RUS approval is obtained.

(b) *Contract construction.* (1) Whether the contractor is selected through sealed competitive bidding or negotiation, as approved by RUS, award of the contract is subject to RUS approval.

(2) The requirements and procedures for sealed competitive bidding are presented in § 1753.8(a). The requirements and procedures for negotiation are presented in § 1753.8(b).

(c) *Force account construction.* To obtain RUS approval of the force account method for major construction the borrower must demonstrate its ability to perform major construction based on past force account construction which fully met RUS construction standards and was as cost-effective as contract construction in the area. If the borrower has no record of past performance to support its request, but has adequate equipment and experienced personnel to perform the proposed construction, RUS may approve a small trial project. The requirements and procedures for force account construction are presented in subparts D, E, G, and H.

[54 FR 39267, Sept. 25, 1989. Redesignated at 55 FR 39396, Sept. 27, 1990, and amended at 59 FR 43716, Aug. 25, 1994]

§ 1753.6 Standards, specifications, and general requirements.

(a) Materials, equipment, and construction financed with loan funds must meet the standards and specifications established by RUS. 7 CFR part 1755 lists the RUS Bulletins containing the standards and specifications for telephone facilities. Materials and equipment meeting these standards are included on the List of Material Acceptable for Use on Telephone Systems of RUS Borrowers, RUS Bulletin 344–2. This bulletin may be obtained by subscription from the Superintendent of Documents, Government Printing Office, Washington, DC 20402.

(b) The borrower may use RUS loan funds to finance nonstandard construction materials or equipment only if approved by RUS in writing prior to purchase or commencement of construction.

(c) Only new materials and equipment may be financed with loan funds, unless otherwise approved by RUS.

(d) All materials and equipment financed with loan funds are subject to the ''Buy American'' provision (7 U.S.C. 901 *et seq.* as amended in 1938).

[54 FR 39267, Sept. 25, 1989. Redesignated at 55 FR 39396, Sept. 27, 1990, and amended at 59 FR 43716, Aug. 25, 1994]

§ 1753.7 Plans and specifications (P&S).

(a) The P&S consist of an RUS contract form, the appropriate RUS specifications, and such additional information and documents needed to provide a clear, accurate, and complete understanding of what is included in the construction.

(b) 7 CFR 1755.93 provides a list of the RUS forms of telecommunications contracts for use in purchasing telephone materials and equipment and for constructing telephone facilities with loan funds. Also listed is the source where copies may be obtained.

(c) The appropriate standards and specifications listed in 7 CFR part 1755 shall be included in the P&S. When RUS has not prepared standards and specifications, the borrower shall use general engineering requirements and functional specifications prepared by the borrower's engineer and approved by RUS.

(d) The P&S shall be based on the LD approved by RUS. Section 1753.3 presents the requirements and procedures for obtaining RUS approval for construction that does not conform to the LD approved by RUS.

(e) RUS approval of the P&S is required for major construction but not for minor construction, except as noted in subpart D.

(f) RUS will approve only contracts that will provide for at least the following requirements.

(1) *Equal employment opportunity provision.* If this provision is not already in the contract, RUS Contract Form 270, Equal Opportunity Addendum, shall be attached and made a part of the contract.

(2) *Liquidated damages provision.* (i) If not covered by the contract, an appropriate liquidated damages provision, in a form prescribed by RUS, shall be included and made a part of the contract

(ii) The liquidated damages must be based upon the borrower's best estimate of the damages it would incur as a result of the contractor's default.

(3) *Insurance and bond requirements.* (i) The insurance provision shall provide coverage as required by 7 CFR 1788.

(ii) A contractor's bond shall be furnished as required by 7 CFR part 1788.

(iii) The borrower is responsible for ensuring that its contractor complies with the insurance and bond requirements.

(4) Telecommunications software license provision. If the borrower is required to enter into a software license agreement in order to use the equipment, the contract must contain the RUS prepared Software License Agreement as an Addendum.

[54 FR 39267, Sept. 25, 1989. Redesignated at 55 FR 39396, Sept. 27, 1990, and amended at 59 FR 17679, Apr. 14, 1994]

§1753.8 Contract construction procedures.

(a) Sealed, competitive bidding—(1) *Bid opening date:* Upon approval of the P&S by RUS, the borrower shall schedule a bid opening date. In setting the date sufficient time should be allowed for bidders to examine the project site and prepare their bids. The borrower shall notify the GFR of the bid date selected and invite the GFR to attend.

(2) *Invitations to bid:* The borrower is responsible for sending invitations to prospective bidders and taking any other action necessary to procure full, free, and competitive bidding. The borrower should obtain from its engineer a list of prospective bidders and a recommendation indicating which bidders are considered qualified. The minimum number of contractors to be invited to bid on contracts for various types of facilities is set forth in subparts D, E, F, or H.

(3) *Qualifying bidders:* If the notice and instructions to bidders require that bidders show evidence of meeting certain requirements, the borrower shall qualify bidders before issuing P&S to them. Procedures for qualifying bidders are contained in subparts D, E, and F.

(4) *Receipt of bids:* The borrower shall write on the outside envelope of any bid or bid amendment, the date and time the bid was received. Any bid received from an unqualified bidder or after the time specified for opening shall be returned promptly to the bidder unopened.

(5) *Procedure when fewer than three bids are received:* If fewer than three valid bids are received, the borrower shall consult with RUS to determine whether the bids are to be opened or returned unopened. RUS requires that the project be rebid if fewer than three bids are received and RUS determines that one or more other bidders with an express interest in bidding is available and could meet the bid requirements, but was not invited to bid. RUS shall also require rebidding if it is found that qualified bidders were discouraged from bidding by unreasonable bid requirements (such as late notification to bidders) or if the borrower fails to follow the bid procedure.

(6) *Conduct of bid openings:* The borrower shall conduct bid openings open to the public. The borrower should be able to contact its attorney for immediate consultation.

(7) *Review of bids:* The borrower shall review all bids prior to reading any bid results to determine that:

(i) The bid guarantees are adequate.

(ii) All minor errors or irregularities made through inadvertence are corrected or waived. Failing this, the bid shall be rejected as nonresponsive.

(iii) In the event of non-minor errors or irregularities, the bid is rejected and the bid price not disclosed.

(8) *Reading of bids:* Bid prices shall not be read until the borrower has reviewed all bids to determine if there are any minor errors or irregularities that may affect the recommendation as to award. These shall be made public at

the same time the bid price is announced.

(9) *Evaluating bids:* The borrower shall consider the same alternates in all bids in determining the low bid.

(10) *Rejection:* The borrower shall reject:

(i) All bids if quoted prices are not acceptable or if the specifications were ambiguous and resulted in bidders having different interpretations of the requirements.

(ii) Any bid that is not responsive, or is incomplete, or submitted by an unqualified bidder, or unbalanced between labor and materials or other respects.

(11) *Award of contract:* (i) The borrower shall obtain from the engineer the determination of the lowest responsive bid, a tabulation of all bids and the engineer's recommendation for award of the contract.

(ii) If an award is made, the borrower shall award the contract to the lowest responsive bidder, subject to RUS approval. The borrower may award the contract immediately upon determination of the lowest responsive bidder if the following conditions are met:

(A) The project is included in an approved loan and adequate funds were budgeted in the loan and are available.

(B) All applicable RUS procedures were followed, including those in the Notice and Instructions to Bid in the standard forms of contract.

(iii) The borrower shall send to RUS for consideration of approval of the award:

(A) Two copies of the low bid.

(B) The engineer's recommendation and the tabulation of all bids.

(C) Evidence of acceptance of the low bid by the borrower, such as:

(*1*) Certified copy of board resolution or

(*2*) letter or telegram to RUS signed by a properly authorized corporate official.

(12) *Execution of contract:* (i) Upon approval by RUS of the award of contract by the borrower, the borrower shall submit to RUS three original counterparts of the contract executed by the contractor and borrower.

(ii) If RUS approves the contract, it shall return one copy to the borrower and send one copy to the contractor.

(b) *Negotiated construction contracts.* (1) For the construction of certain facilities the borrower may negotiate a contract rather than solicit sealed competitive bids. Refer to the appropriate subparts E, F, or H for specific requirements and procedures.

(2) For negotiated purchases, borrowers shall use RUS contract forms, standards, and specifications.

(3) For all contract forms except RUS Form 773:

(i) After a satisfactory negotiated proposal has been obtained, the borrower shall submit it to RUS for approval, along with the engineer's recommendation, and evidence of acceptance by the borrower.

(ii) If RUS approves the negotiated proposal, the borrower shall submit three copies of the contract, executed by the contractor and borrower, to RUS for approval.

(iii) If RUS approves the contract, RUS shall return one copy of the contract to the borrower and one copy to the contractor.

(4) For RUS Form 773, the borrower is responsible for negotiating a satisfactory proposal, executing contracts, and closing the contract. See subparts F and I of this part for requirements for major and minor construction, respectively, on Form 773.

[54 FR 39267, Sept. 25, 1989. Redesignated at 55 FR 39396, Sept. 27, 1990, and amended at 59 FR 43716, Aug. 25, 1994]

§ 1753.9 Subcontracts.

(a) RUS construction contract Forms 257, 397, 515, and 525 contain provisions for subcontracting. Reference should be made to the individual contracts for the amounts and conditions under which a contractor may subcontract work under the contract.

(b) RUS Form 282, Subcontract, shall be used for subcontracts under construction and installation contracts.

(1) Minor modifications or additions may be made to the subcontract form, as long as they do not change the intent of the primary contract. Any alterations to the subcontract shall be initialed and dated by the persons executing the subcontract.

(2) Subcontracts shall be prepared in quadruplicate and all copies executed by the contractor and subcontractor

and consented to by the borrower and surety, if any.

(3) Four executed copies of the subcontract shall be forwarded to RUS for approval. Upon approval, one copy each will be sent to the borrower, contractor, and subcontractor.

(c) As stated in contract Forms 257, 397, 515, and 525, the contractor shall bear full responsibility for the acts and omissions of the subcontractor and is not relieved of any obligations to the borrower and to the Government under the contract.

(d) As stated in the contract, construction shall not be performed by the subcontractor before approval of the subcontract by RUS.

[54 FR 39267, Sept. 25, 1989. Redesignated at 55 FR 39396, Sept. 27, 1990, and amended at 59 FR 43716, Aug. 25, 1994]

§ 1753.10 Preconstruction conference.

The borrower shall conduct a conference, attended by the borrower, contractor, and resident engineer prior to the beginning of construction to provide an opportunity to discuss and agree on responsibilities, procedures, practices, and methods before the work begins. The borrower shall provide each participant with a copy of the conference results. The GFR shall be invited to attend this conference.

§ 1753.11 Contract amendments.

(a) The borrower must obtain RUS approval before execution of any amendment to a contract if

(1) The amendment alters the terms and conditions of the contract or changes the scope of the project covered by the contract regardless of the amount of the contract before amendment,

(2) The amendment increases the amount to be paid under the contract by 20% or more, or

(3) After amendment, the amount of the contract will be $100,000 or more.

(b) Prior RUS approval to execute other contract amendments is not required. These amendments are to be submitted after execution to RUS for approval.

(c) For each amendment executed, the borrower shall make certain that:

(1) The contractor's bond covers the additional work to be performed. If the amendment by itself (or together with preceding amendments) increases the original contract price by 20% or more, a bond extension will be required to bring the penal sum of the bond to the total amended contract price.

(2) If an amendment covers construction in a county or state not included in the original contract, the borrower and contractor are licensed to do business in that location.

(d) Amendments are to be submitted in triplicate to RUS for approval with a copy of the board resolution or a letter signed by an authorized corporate official.

§§ 1753.12—1753.14 [Reserved]

Subpart B—Engineering Services

SOURCE: 54 FR 3984, Jan. 27, 1989, unless otherwise noted. Redesignated at 55 FR 39397, Sept. 27, 1990.

§ 1753.15 General.

(a)(1) The standard RUS Loan Documents (*See* 7 CFR part 1758) contain provisions regarding engineering and architectural services performed by or for RUS telephone borrowers. This part implements certain of the provisions by setting forth the requirements and procedures to be followed by borrowers in selecting architects and engineers and obtaining architectural and engineering services by contract or by force account.

(2) Preloan architectural and engineering services may be provided by qualified personnel on the borrower's staff or by consultants. Neither the selection of a preloan architect or engineer by a borrower, nor the contractual arrangements with them, requires RUS approval.

(3) Postloan architectural and engineering services shall be obtained by borrowers from registered architects and engineers licensed in the State in which the facilities will be located, except where RUS has approved the borrower to provide these services by the force account method. When the extent of the proposed major or minor construction is such that the postloan engineering involved is within the capabilities of employees on the borrower's staff, the borrower may request RUS

approval to provide such services. This method of providing engineering services is referred to as force account engineering. Refer to § 1753.17(c).

(4)(i) For major construction, services provided by architects and engineers not on the borrower's staff must be provided under Form 165, Architectural Services Contract—Telephone, or Form 217, Postloan Engineering Service Contract—Telephone. These contracts require RUS approval.

(ii) For minor construction, borrowers may use the contracts in § 1753.15(a)(4)(i) for postloan architectural or engineering services or any other form of contract, such as Form 245, Engineering Service Contract, Special Services—Telephone. RUS approval of contracts for postloan architectural or engineering services associated with minor construction, except for buildings covered in § 1753.15(a)(5), is not required.

(5) For buildings to be constructed with RUS funds, postloan architectural or engineering services shall be obtained if (1) the construction cost exceeds $50,000 (prefab buildings using manufacturer's specifications approved by RUS are exempt from this requirement) or (2) soil or seismic conditions require special design considerations.

(b) For the purpose of this subpart B:

(1) *Contract*—The services contract between the borrower and its architect or engineer.

(2) *Force Account Engineering*—Any preloan or postloan engineering services performed by the borrower's staff.

(3) *Postloan engineering services*—The design, procurement, and inspection of construction to accomplish the objectives of a loan as stated in a LD approved by RUS.

(4) *Preloan engineering services*—The planning and design work performed in preparing a LD. This consists of helping the borrower determine the objectives for a loan, including consideration of RUS's requirements relating to the modernization plan, selecting the most effective and efficient methods of meeting loan objectives, and preparing the LD which describes the objectives and presents the method selected to meet them.

(c) Single copies of RUS forms and publications cited in this part are available free from Administrative Services Division, Rural Utilities Service, United States Department of Agriculture, Washington, DC 20250–1500. These forms and publications may be reproduced.

(d)(1) All outside architects and engineers employed by RUS telephone borrowers shall have insurance coverage as required by 7 CFR part 1788.

(2) Borrowers shall ensure that their architects and engineers comply with the insurance requirements of their contracts. See 7 CFR 1788.54.

(e)(1) Borrowers shall make prompt payments to architects and engineers as required by the contract.

(2) RUS shall not make loan funds available for late payment interest charges.

[54 FR 3984, Jan. 27, 1989. Redesignated at 55 FR 39397, Sept. 27, 1990, and amended at 58 FR 66259, Dec. 20, 1993; 59 FR 17464, Apr. 13, 1994]

§ 1753.16 Architectural services.

(a) The borrower shall be responsible for selecting an architect to perform the architectural services required in the design and construction of buildings.

(b)(1) When contracting for architectural services for major construction, the borrower shall use Form 165, except for unattended central office buildings, in which case either Form 165 or Form 217 shall be used. Except for preloan studies (see 7 CFR part 1737), the borrower shall incur no obligation for architectural services until RUS has approved this agreement. A borrower shall not enter into the architectural services contract for major construction before RUS has approved the borrower's LD.

(2) Reasonable modifications or additions to the terms and provisions in Form 165 may be made in order to obtain the specific services needed for a particular undertaking. Changes shall not be made that relieve the architect of any of the responsibilities set forth in the standard form. Borrowers should obtain assistance from their legal counsel to ensure that the contracts are properly prepared and executed.

(3) If the fee schedule has to be modified in order for the borrower to obtain adequate architectural services, the

borrower shall obtain written RUS approval of the revised fee schedule prior to executing contracts.

(4) Three copies of Form 165 executed by the borrower and the architect shall be sent to the GFR to be forwarded to RUS for approval. If RUS approves the contract, one copy will be sent to the architect and one to the borrower.

(5) Loan funds will not be available to pay for the preliminary architectural services if a loan is not made for the construction project, or if the construction project is abandoned.

(6) Subpart D of 7 CFR part 1753 sets forth the requirements and procedures to be followed by borrowers constructing central office, warehouse, and garage buildings with RUS loan funds.

(c)(1) RUS telephone borrowers shall obtain two copies of a completed Form 284, Final Statement of Architect's Fees, when all services and obligations required under the architectural services contract have been completed. All fees shown on the statement shall be supported by detailed information where appropriate. For example: out-of-pocket expense, cost plus, and per diem types of compensation shall be listed separately with labor, transportation, etc., itemized for each service involving these types of compensation.

(2) If Form 284 and supporting data are satisfactory, the borrower shall approve the statement, sign both copies, and send one copy to the GFR.

(3) Upon approval of Form 284 by RUS, the borrower shall promptly make final payment to the architect.

[54 FR 3984, Jan. 27, 1989. Redesignated at 55 FR 39397, Sept. 27, 1990, and amended at 59 FR 43717, Aug. 25, 1994]

§ 1753.17 Engineering services.

(a)(1) All engineering services required by a borrower to support its application for a loan shall be rendered by a qualified engineer selected by the borrower or by qualified employees on the borrower's staff. The selection of the preloan engineer, the form of preloan engineering service contract, and the contract itself, are not subject to RUS approval. Borrowers, however, should discuss their proposed method of obtaining preloan engineering services with the GFR before proceeding with any arrangements.

(2) Form 835, Preloan Engineering Service Contract, Telephone System Design, is a suggested form of preloan engineering service contract. While use of this form of contract is not required, it will be helpful in determining the tasks to be performed. Any form of contract used shall specify that preloan engineering services conform to RUS requirements for preloan studies. See subpart D of 7 CFR part 1737.

(b)(1) *Major construction.* (i) Three copies of Form 217 executed by the borrower and the engineer shall be sent to the GFR to forward to RUS for approval. The engineer's estimate of the engineering fees, on Form 506, shall be included.

(ii) RUS will review the contract terms and conditions. RUS will not approve the contract if, in RUS's judgement:

(A) Unacceptable modifications have been made to the contract form.

(B) The contract will not accomplish loan purposes.

(C) The engineering service fees are unreasonable.

(D) The contract presents unacceptable loan security risk to RUS. (See 7 CFR part 1758).

(2) *Minor construction.* When a borrower contracts for an engineering firm to inspect and certify construction accounted for under the work order procedure or the Contract for Miscellaneous Construction Work and Maintenance Services, Form 773 (See 7 CFR part 1753 subpart I), the borrower shall require that the certification be signed by a licensed engineer.

(c)(1) *Major construction.* When the extent and complexity of the proposed construction is such that the engineering involved is within the capabilities of employees on the borrower's staff, borrowers may request RUS approval to provide such services.

(i) The request shall include:

(A) A description of services to be performed.

(B) The name and qualifications of the employee to be in charge. RUS requires this employee to meet the State experience requirements for registered engineers. In the absence of specific State experience requirements, the employee must have at least eight years

experience in the design and construction of telecommunication facilities, with at least two years of the work experience at a supervisory level. RUS does not require professional registration of this employee, but this does not relieve the borrower from compliance with applicable State registration requirements which may require a licensed individual to perform such services.

(C) The names, qualifications, and responsibilities of other principal employees who will be associated with providing the engineering services. Form 179 may be used to submit the employee qualifications.

(D) A letter signed by an authorized representative of the borrower authorizing the engineering services to be performed by force account and certifying the information supporting the request.

(ii) RUS shall notify the borrower by letter of approval or disapproval to perform force account engineering. The letter shall set forth any conditions associated with an approval or the reasons for disapproval.

(iii) RUS's approval of force account engineering for major construction shall be only for the specific projects named in the notice of approval.

(2) *Minor construction*. (i) When the borrower proposes to perform the inspection and certification of minor construction, the following shall be submitted to the RUS:

(A) A copy of the employee's qualifications and experience record on Form 179, unless previously submitted. RUS requires a minimum of four years of construction and inspection experience. The employee cannot be engaged in the actual construction.

(B) A letter signed by an authorized representative of the borrower authorizing the performance of these services by the employee, subject to RUS approval, and certifying the supporting information.

(ii) RUS shall notify the borrower by letter of approval or disapproval of the borrower's staff employee to perform the inspection and certification of construction. The approval shall be limited to the employee's area of expertise.

(d)(1) Subject to the requirements of this part and other applicable regulations, RUS will make loan funds available for the architectural and engineering services up to the amounts included in the approved loan.

(2) Advance of funds shall be requested on an FRS as set forth in 7 CFR part 1744 subpart C.

(e) The borrower shall obtain status of contract and force account proposal reports from the engineer once each month. The report shall show for each contract or FAP the approved contract or FAP amount, the date of approval, the scheduled date construction was to begin and the actual date construction began, the scheduled completion date, the estimated or actual completion date, the estimated or actual date of submission of closeout documents, and an explanation of delays or other pertinent data relative to progress of the project. One copy of this report shall be submitted to the GFR.

(f)(1) Upon completion of all services required under the engineering service contract Form 217, the borrower shall obtain from the engineer four copies of the Final Statement of Engineering Fee, Form 506.

(2) If the statement is satisfactory, the borrower shall sign all copies and send three to the GFR.

(3) After RUS approval of Form 506, one copy shall be sent to the borrower and one copy sent to the engineer.

(4) The borrower shall promptly make final payment to the engineer.

[54 FR 3984, Jan. 27, 1989. Redesignated at 55 FR 39397, Sept. 27, 1990, and amended at 59 FR 43717, Aug. 25, 1994]

§§ 1753.18—1753.20 [Reserved]

Subpart C—[Reserved]

Subpart D—Construction of Buildings

SOURCE: 54 FR 39267, Sept. 25, 1989, unless otherwise noted. Redesignated at 55 FR 39396, Sept. 27, 1990.

§ 1753.25 General.

(a) This subpart implements and explains the provisions of the Loan Documents setting forth the requirements and the procedures to be followed by

borrowers in constructing central office, warehouse, and garage buildings with loan funds.

(b) Terms used in this subpart are defined in §1753.2.

(c) All plans and specifications for buildings to be constructed with loan funds are subject to the approval of RUS. Refer to §1753.26 for further instructions.

(d) RUS Contract Form 257, Contract to Construct Buildings, shall be used for the construction of all central office, warehouse, and garage buildings with loan funds. Refer to §1753.26 (b) and (c) for further instructions.

(e) The borrower shall use the sealed competitive bid procedure for all building construction, except for:

(1) Minor construction using subpart I procedures.

(2) Major construction, where the borrower has received advanced approval to perform the construction by force account.

Refer to §§1753.27 and 1753.29 for further instructions.

(f) The site location, design, and construction of the facilities must comply with all applicable laws and regulations, including:

(1) Pub. L. 90–480 (42 U.S.C. 4151) (Access to Physically Handicapped), which requires certain buildings financed with Federal funds be designed and constructed to be accessible to the physically handicapped.

(2) Pub. L. 91–596 (29 U.S.C. 651) the Occupational Safety and Health Act of 1970. OSHA issues rules and regulations covering occupational safety and health standards for buildings. These regulations are codified in 29 CFR chapter XVII.

(3) 7 CFR part 1794, which provides for compliance with the National Environmental Policy Act (NEPA) and Council on Environmental Quality (CEQ) regulations (40 CFR parts 1500–1508) implementing the procedural provisions of NEPA, as well as RUS's conformance with other laws, regulations, and Executive Orders regarding environmental protection.

(4) 7 CFR part 1792, subpart C, which requires that the building design comply with applicable seismic design criteria. Prior to the design of buildings, borrowers shall submit to RUS a written acknowledgement from the architect or engineer that the design will comply.

(g) All construction pertaining to the building structure shall be performed under one contract. Separate contracts may be used for planting shrubbery, surfacing of roads and parking areas, and other identifiable parts of the project not pertaining to the building structure. These separate contracts shall also be subject to RUS approval as described in this subpart D.

(h) The borrower is responsible for submitting evidence, satisfactory to RUS, establishing that clear title to the building site has been obtained. RUS will not approve the construction contract until it has given title clearance.

[54 FR 39267, Sept. 25, 1989. Redesignated at 55 FR 39396, Sept. 27, 1990, and amended at 59 FR 43717, Aug. 25, 1994]

§1753.26 Plans and specifications (P&S).

(a) The borrower shall prepare P&S for construction of all buildings. Each set of P&S shall include:

(1) RUS Contract Form 257, Contract to Construct Buildings, completed to the extent explained in §1753.26(b).

(2) Complete and detailed specifications covering materials and workmanship.

(3) A detailed building plan. Where the building is to house electronic apparatus, the detailed plan or specifications shall include the equipment environmental requirements and special equipment required.

(4) A site plan for each building showing the building location and giving the legal description of the site. Sufficient information must be provided for the site so that it can be identified as the same property on which title opinion was submitted to RUS. The legal description shall be typed on the site plan. The borrower shall also furnish topographical information and a description of any proposed site development work and show proposed connections for public utilities.

(b) RUS Contract Form 257 shall be completed as follows:

(1) *List of names or kinds of buildings and locations*—Site plan and specifications must be identified with the appropriate building.

(2) *Alternates*—The borrower shall keep the number of alternates to a minimum. Items for which alternates are to be taken shall be fully described on a separate sheet in the specifications and the details shown on the plans, when necessary, and identified by the alternate number. The Notice and Instructions to Bidders shall explain how bids will be evaluated with respect to alternates.

(3) *Time for construction*—A reasonable time for completion of construction, considering local conditions, shall be determined by the borrower and inserted in the space provided. Too short a construction period may discourage bidders or influence their bids. Completion of the building, where central office equipment is involved, shall be coordinated with delivery of the equipment. The time of completion shall allow adequate drying time before the central office equipment is stored or installed in the building.

(c) The plans and specifications shall show the identification and date of the model code used for seismic safety design considerations, and the seismic factor used. See 7 CFR part 1792, subpart C.

(d) Two sets of the building plans and specifications shall be prepared and submitted to the GFR.

[54 FR 39267, Sept. 25, 1989. Redesignated at 55 FR 39396, Sept. 27, 1990, and amended at 59 FR 43717, Aug. 25, 1994]

§ 1753.27 Bidding procedure.

Upon RUS approval of the P&S, the borrower shall proceed as follows:

(a) Bid documents shall consist of a copy of the approved P&S, including RUS Contract Form 257, completed in accordance with the instructions on the cover of the form and the plot plans showing site development details. For contracts in amounts of $100,000 or less, the borrower must specify in the Notice and Instructions to Bidders whether the contractor will be required to furnish a performance bond or a builder's risk policy.

(b) The borrower shall determine that title to the real estate has been approved by RUS before the invitations to bid are released.

(c) The borrower shall set the time for opening of bids, allowing ample time for bidders to prepare bids.

(d) The borrower shall solicit bids as set forth in § 1753.8(a)(2). Invitations shall be sent to at least six prospective bidders.

(e) The borrower shall conduct bid opening and award of contract in accordance with the procedure set forth in § 1753.8(a).

§ 1753.28 Contract amendments.

(a) The general requirements for contract amendments are set forth in § 1753.11.

(b) The borrower shall prepare construction contract amendments on RUS Contract Form 238, Construction or Equipment Contract Amendments. See 7 CFR 1755.93 to obtain copies of Form 238.

§ 1753.29 Force account procedures.

(a) The borrower must obtain RUS approval of the force account method of construction of buildings in advance in order to obtain RUS financing.

(b) The borrower shall prepare the P&S in accordance with § 1753.26.

(c) Prior to any construction activity or the purchase of materials or equipment, the borrower shall submit the FAP in duplicate to RUS, accompanied by a resolution indicating approval of the board of directors of the borrower or a letter signed by an authorized corporate official. The proposal shall include:

(1) A Copy of the P&S.

(2) An itemized list of all items of materials required for construction.

(3) A construction schedule showing the estimated construction period for each major construction item.

(4) An estimate of the material and labor and other costs for any construction item not provided for in the approved loan.

(d) Force Account construction to be financed with loan funds shall not be started until RUS approval has been received by the borrower.

[54 FR 39267, Sept. 25, 1989. Redesignated at 55 FR 39396, Sept. 27, 1990, and amended at 59 FR 43717, Aug. 25, 1994]

§1753.30 Closeout procedures.

(a) This section outlines the procedure to be followed to close out RUS Contract Form 257 (Contract to Construct Buildings) and construction or rehabilitation performed by the force account method.

(b) *RUS Form 257 contract.* (1) Whenever changes were made in the plans and specifications which did not require an amendment under conditions set forth in §1753.11 a final contract amendment showing the changes shall be prepared and submitted to RUS with the closeout documents.

(2) Immediately after completion of contract construction, including cleanup, the borrower shall:

(i) Arrange with its architect or engineer, contractor, and the GFR for final inspection of the project.

(ii) Furnish the contractor a summary of corrections or additions required to complete the project in accordance with the plans and specifications and the contract, and any contract amendments required to cover the corrections or additions.

(iii) Arrange, upon completion of the corrections by the contractor, to have its engineer prepare or obtain the documents listed in appendix A which are required for closeout of contract construction.

(iv) Make distribution of the completed documents as indicated in appendix A.

(c) Upon completion of force account construction, the borrower shall:

(1) Arrange with its architect or engineer and the GFR for final inspection of the project.

(2) Complete, with the assistance of its architect or engineer, the documents listed in appendix A of this part that are required for the closeout of force account construction.

(3) Make distribution of the completed documents as indicated in appendix A.

(d) Final payment shall not be made until RUS has approved the closeout documents.

[54 FR 39267, Sept. 25, 1989. Redesignated at 55 FR 39396, Sept. 27, 1990, and amended at 59 FR 43717, Aug. 25, 1994]

§§1753.31—1753.35 [Reserved]

Subpart E—Purchase and Installation of Central Office Equipment

SOURCE: 54 FR 39267, Sept. 25, 1989, unless otherwise noted. Redesignated at 55 FR 39397, Sept. 27, 1990.

§1753.36 General.

(a) This subpart implements and explains the provisions of the Loan Documents setting forth the requirements and the procedures to be followed by borrowers in purchasing and installing central office equipment financed with loan funds.

(b) Terms used in this subpart are defined in §1753.2 and RUS Contract Forms 525 and 545.

(c) Borrowers shall use RUS Contract Form 525, Central Office Equipment Contract (Including Installation), when the firm supplying the equipment will install it and RUS Contract Form 545, Central Office Equipment Contract (Not Including Installation) when the supplier of the equipment will not be installing it. In either case the appropriate specifications shall be included in the contract.

(d) Alternates, if any, specified in the P&S shall be kept to a minimum.

(e) The borrower shall take sealed competitive bids for all central office equipment to be purchased under RUS Contract Form 525 or 545 using the procedure set forth in §1753.38(a), unless RUS approval to negotiate is obtained.

(f) The borrower may request permission to negotiate with a single supplier for additional central offices to standardize equipment on a system basis. RUS approval to negotiate must be obtained before release of the plans and specifications to the supplier. Except for remote switching terminals associated with an existing central office, RUS will not approve negotiation with a non-domestic manufacturer for the purpose of standardization because such a purchase does not meet the RE Act ''Buy American'' provisions.

(g) Materials and equipment must meet the standards and general specifications approved by RUS. Materials

and equipment included in RUS Bulletin 344–2 ''List of Materials Acceptable for Use on Telephone Systems of RUS Borrowers'' have been accepted as meeting these requirements. If the equipment is not included in the ''List of Materials'' but has been approved for field trial installation, the borrower must in each instance obtain field trial approval from RUS prior to entering into any agreement with a supplier.

(h) Only new equipment shall be purchased unless otherwise approved by RUS.

(i) All purchases of materials and equipment are subject to the ''Buy American'' requirements.

(j) If the sealed competitive bid procedure is followed, negotiation after bid opening will not be permitted.

§ 1753.37 Plans and specifications (P&S).

(a) *General.* (1) Prior to the preparation of P&S, the borrower shall review with the GFR the current and future requirements for central office equipment.

(2) The P&S shall specify the delivery and completion time required for each exchange.

(3) The P&S shall provide for a complement of spare parts to be provided to the borrower. The quantity and type of spare parts shall be determined in accordance with the provisions in RUS Form 522 ''General Specification for Digital, Stored Program Controlled Central Office Equipment.''

(4) P&S for equipment to be provided under a Form 545 contract shall require the supplier to provide specific installation information and a detailed bonding and grounding plan to be utilized by the engineer. borrower, and others responsible for the installation of the equipment.

(b) *Preparation of P&S.* (1) The P&S shall include RUS Contract Form 525 or 545, Notice and Instructions to Bidders, specifications for the required equipment for each exchange, provision for spare parts, and all other pertinent data needed by the bidder to complete its proposal.

(2) Guidelines for the preparation of the detailed equipment specifications are contained in the Telecommunications Engineering and Construction Manual (TE&CM), which is available from RUS.

(c) *Submission of P&S.* (1) Two sets of the P&S shall be submitted to the GFR for RUS review.

(2) RUS will review the P&S and notify the borrower of approval or disapproval.

(3) After approval of the P&S, one copy will be returned to the borrower.

§ 1753.38 Procurement procedures.

(a) *Sealed competitive bidding.* Sealed competitive bidding of central office equipment shall be in two steps: presentation and evaluation of suppliers' technical proposals, and compliance with the sealed competitive bidding procedure set forth in § 1753.8(a). The procedure is as follows:

(1) *Solicitation of bids.* (i) After RUS approval of the specifications and equipment requirements, the borrower shall send ''Notice and Instructions to Bidders'' to suppliers selected by the borrower with central office equipment included in the current ''List of Materials Acceptable for Use on Telephone Systems of RUS Borrowers.'' This ''Notice'' may also be sent to suppliers of non-domestic equipment currently accepted by RUS as meeting RUS technical standards. With RUS written approval, the ''Notice'' may also be sent to suppliers of central office equipment accepted for field trial.

(ii) The ''Notice'' must set forth the method of evaluating bids and must require the submission of equipment lists and traffic calculations with the bids.

(iii) RUS Contract Forms 525 or 545 shall be used, except that the ''Notice'' shall state that prior to the bid opening a technical session will be conducted with each supplier to resolve any questions related to the technical proposal submitted by the supplier. The suppliers' technical proposals should be requested for presentation 30 days in advance of the bid opening to enable sufficient time to make the technical evaluation.

(iv) The borrower shall solicit bids as set forth in § 1753.8(a)(2). The ''Notice'' shall be sent to at least three prospective bidders. A copy of the ''Notice'' and a list of such bidders shall be sent to RUS.

(v) At the request of an invited supplier, the borrower shall provide two copies of the approved P&S.

(2) *Technical Sessions.* (i) The borrower shall schedule individual technical sessions by the suppliers, notify each supplier of its scheduled date and time, and request the following be available at the technical session:

(A) Lists of equipment, material and software.

(B) Proposed floor plan.

(C) Power and heat dissipation calculations.

(D) List of exceptions to plans and specifications.

(E) Protection and grounding requirements.

(F) Description of how office administration, maintenance and traffic collection are handled with step-by-step examples and printouts.

(G) Explanation of processor and/or memory expansion required to meet ultimate size. This shall include discussions of software, processor memory, and hardware additions needed for line additions and the introduction of various future services; the relative costs of installing the necessary hardware and software initially as compared with the anticipated cost if installed at the time when the future services are to be offered.

(H) Description of how special equipment such as loop tests, volunteer fire alarm circuit, line load control, etc., will function.

(I) Description of method for translating initial office administration information into machine language, and proposal as to whether it will be done by the borrower or by the supplier.

(J) A software license agreement (if required by the manufacturer) in the form indicated in § 1753.38(c).

(K) Any other items pertinent to the technical proposal, such as information regarding changes that have been made in hardware and software of the equipment that is of like manufacture to that presently in operation in the borrower's system. This shall include requirements for additional spare parts or training which have developed as a result of significant change in system device technology.

(ii) The borrower shall review in detail all exceptions to the P&S. No exceptions will be accepted unless all bidders are notified, in writing, of the change in the specifications and permitted to incorporate the change in their proposal.

(iii) If the technical proposal is not responsive, the borrower shall notify the supplier, in writing, that its proposal will not be given further consideration and why.

(iv) Changes in the P&S resulting from the technical sessions shall be subject to RUS's review and approval.

(v) After evaluation of the technical proposals and RUS approval of changes to the P&S, sealed bids shall be solicited from only those bidders whose technical proposals meet the P&S requirements. When fewer than three bidders are qualified to bid, RUS approval must be obtained to proceed. Generally, RUS will grant this approval only if all suppliers currently listed in the ''List of Materials Acceptable for Use on Telephone Systems of RUS Borrowers'' were invited to submit technical proposals.

(vi) The borrower shall invite the GFR to attend the technical sessions.

(3) *Bidding and award of contract:* (i) All bids must be completed, dated, and signed prior to submission.

(ii) The bid opening and award of contract shall be conducted in accordance with the procedure set forth in § 1753.8(a).

(iii) The spare parts bid shall always be priced separately and added to the base bid when determining the low bidder.

(b) *Single source negotiated procurement.* If RUS has approved the borrower's request to procure central office equipment through single source negotiation in accordance with requirements contained in § 1753.36(f), the borrower shall proceed in accordance with this subsection.

(1) After RUS approval of the P&S and equipment requirements, the borrower shall send two complete copies of the approved P&S to the supplier and request that a proposal be submitted.

(2) The borrower shall schedule a time and date for a technical session by the supplier and request that the items listed in § 1753.38(a)(2)(i) be available at the technical session. In addition to these items, the supplier shall

be requested to provide a description of the exact differences in hardware and software between the borrower's existing equipment and the proposed equipment so that the borrower can determine spare parts interchangeability, need for retraining, and the compatibility of administration of the old and new equipment.

(3) Changes in the P&S resulting from the technical session shall be subject to RUS's review and approval.

(4) The submitted proposal shall be based on the agreed-upon results of the technical evaluation and must be complete, dated, and signed.

(5) The borrower shall obtain an award recommendation from its engineer based upon the engineer's detailed review of the proposal.

(6) The following shall be sent to RUS for review and approval:

(i) A copy of the engineer's recommendation to the borrower, and

(ii) Evidence of acceptance of the proposal by the borrower, such as

(A) A certified copy of the board resolution, or

(B) A letter to RUS signed by an authorized corporate official.

(7) RUS approval of the proposal will be conditioned upon the borrower obtaining prices that are consistent with current competitive prices. Upon RUS approval of the proposal, three copies of the contract shall be prepared with all specifications and proposal documents, and performance bonds, to be executed by the supplier and borrower.

(8) The three complete, executed contracts shall be sent to the RUS Area Engineering Branch Chief for approval.

(9) If RUS approves the contract, one copy will be returned to the borrower and one copy will be sent to the supplier.

(10) Installation of the central office equipment and materials provided under RUS Contract Form 545 may be made in accordance with subpart I, if applicable, or by an approved Force Account Proposal (FAP).

(c) *Software license agreement (Addendum 2).* The Addendum in this paragraph to RUS Form 525, Central Office Equipment Contract (Including Installation), and RUS Form 545, Central Office Equipment Contract (Not Including Installation), must be used with any central office equipment contract that requires a software license agreement and for which RUS financial assistance is to be provided.

Addendum 2—Software License Agreement

(1) *Definitions.* For the purpose of this Software License Agreement—

Contract means the RUS Form 525 Central Office Equipment Contract (Including Installation) or RUS Form 545 Central Office Equipment Contract (Not Including Installation),

dated_____, between

_____

(the Licensee) and _____

(the Licensor).

Days means calendar days.

Licensed Software means the computer programs, furnished for the operation of the System(s) provided under the Contract, whether contained on a tape, disc, semiconductor device, or other memory device or system memory consisting of logic instructions and instruction sequences in machine-readable object code, which manipulate data in the central processor, control and perform input/output operations, perform error diagnostic and recovery routines, control call processing, and perform peripheral control, administrative and maintenance functions; as well as Licensor's standard customer documentation, excluding source code, used to describe, maintain and use the programs provided under the Contract.

Licensee and *Licensor,* respectively, mean the parties signing the software license agreement as the licensee and licensor.

Right-to-Use Fee is defined in section (2).

Specifications means the RUS Form 522, General Specification for Digital, Stored Program Controlled Central Office Equipment, which is part of the Contract.

System means the stored program controlled central office and associated remote switching terminal or terminals which use the Licensed Software covered by this License.

(2) *Software License Provisions.* The Licensor may charge a fee, herein referred to as a Right-to-Use Fee, for use of the Licensed Software. The Right-to-Use Fee shall be included in the Total Base Bid as defined in the Contract. In consideration of the Right-to-Use Fee, the Licensor hereby grants the Licensee the right to use all Licensed Software, solely in connection with the System provided under this Contract, so that the System performs in accordance with the Contract and the Specifications.

(i) The Licensee's right to use the Licensed Software is non-exclusive and limited to use or operation in the United States of America, including its Territories, the Federated

States of Micronesia, the Marshall Islands, Palau and the Commonwealth of Puerto Rico, with the System for which the Licensed Software is provided by the Licensor. The Licensee may reuse the equipment and its accompanying Licensed Software at another location within the Licensee's System without obtaining additional approvals from Licensor, provided, however, that the Licensee notify the Licensor, within ten (10) days, of the change in location of the equipment and Licensed Software.

(ii) The Licensee and any successor to the Licensee's title in the System may, without further consent of the Licensor, transfer the Licensed Software and all of the Licensee's rights and interests under this Software License to any transferee who acquires legal title to the System, provided that such transferee first agrees in writing to the Licensor to abide by all of the terms and conditions of this License including, without limitation, the territorial limitation stated in section (2)(i) and the restrictions on decompiling or reverse assembly stated in section (2)(iii). Licensee shall give Licensor written notice thirty (30) days prior to any transfer. The Licensor shall not place any additional conditions on the transferee's use of the System or the Licensed Software. If the provisions of this section (2)(ii) are satisfied, thereafter the Licensee shall bear no responsibility for transferee's failure to abide by the terms and conditions of this License.

(iii) The Licensee shall take reasonable steps to protect the confidentiality of the Licensed Software and shall not decompile or reverse assemble all or any part of the Licensed Software to generate source code. The Licensee shall not make the Licensed Software available to any person except on a need to know basis. The obligations of the Licensee hereunder shall not extend to any information or data relating to the Licensed Software which is now available to the general public or becomes available by reason of the acts of the Licensor or third parties.

(iv) The Licensee may reproduce or copy the Licensed Software and related materials solely for the purpose of archival backup, in-house training and operating, maintaining, and administering the System provided under this Contract. In such reproduction, the Licensee shall include, upon all such copies of the Licensed Software, all proprietary notices, including the copyright notice within the Licensed Software program and related documentation in the form in which it is received from the Licensor.

(v) The Licensee acknowledges that the Licensed Software program is the property of the Licensor, and shall not do, or cause to be done, anything to activate any of the subsisting nonactivated computer instruction steps therein unless authorized in writing by the Licensor. The Licensor shall have the exclusive right to activate, or authorize the activation of, the subsisting nonactivated program instruction steps in the Licensed Software. In this event Licensee shall pay any additional Right-To-Use Fee(s) agreed to by Licensee and Licensor.

(vi) In the event the Licensor develops significant improvements to the Licensed Software, the Licensor may market the improvements as a separate offering requiring payment of an additional Right-to-Use Fee.

(vii) The Licensee shall not modify or otherwise change the Licensed Software other than at the direction of the Licensor. This provision shall not apply to:

(A) Changes to the Licensed Software which are necessary to preserve or restore service. Licensee shall use all reasonable efforts to contact Licensor before making any such changes. If the Licensor is unable to make the necessary changes promptly to the Licensed Software to preserve or restore service, then the Licensee may make only such changes to the Licensed Software as are necessary to preserve or restore service. In such event, Licensee shall promptly notify Licensor of the changes made by Licensee.

(B) Changes made by the Licensee to its own database; and

(C) Changes made by the Licensee in connection with the exercise of its rights under section (2)(xi).

(viii) Within thirty (30) days after written notice that a program or a release thereof has been discontinued and is no longer required for the operation of the System and the Licensor has furnished the Licensee with a new program that is fully satisfactory to the Licensee, the Licensee agrees to return the original and all copies of the discontinued program and specified related documents. If such return is impossible or impractical, the Licensee shall destroy said program and documents and provide the Licensor with a written notice of such destruction.

(ix) The Licensor warrants to the Licensee that any Software licensed under this Software License shall function for a period of five (5) years from the warranty start date defined in the Contract in accordance with the Specifications and any written or printed technical material provided by the Licensor to explain the operation of the Licensed Software and aid in its use. The Licensor shall correct all deficiencies within thirty (30) days from the date of receipt by the Licensor of written notice of such deficiencies from the Licensee. An extension of this thirty (30) day period may be allowed only if agreed upon by the Licensee and RUS. It shall be the Licensor's obligation to insert and thoroughly test, at no charge to the Licensee, any software amendment or alteration provided to satisfy the obligations of this section (2)(ix). If a deficiency is detected or a correction made within the final ninety (90) days of the warranty, the warranty shall

be extended to a date ninety (90) days after the deficiency has been corrected.

(x) The Licensor shall hold harmless and indemnify the Licensee from any and all claims, suits, and proceedings for the infringement of any patent, copyright, trademark, or violation of trade secrets covering any Licensed Software used with the System, except for items of the Licensee's design or selection. If the Licensee's use of the Licensed Software is enjoined, the Licensor shall promptly, at its own expense, place the Licensee in a position where it is able to use the System in accordance with the Specifications, whether by:

(A) Modifying the Licensed Software or portion thereof so that it no longer infringes but remains functionally equivalent,

(B) Replacing the Licensed Software with noninfringing equivalent software,

(C) Obtaining for the Licensee a license or other right to use, or

(D) Such other actions as may be required. This shall be in addition to any other rights or claims which the Licensee may have. The Licensor shall, at its own expense, (and the Licensee agrees to permit the Licensor to do so) defend any suits which may be instituted by any party against the Licensee for alleged infringement of patents, copyright, trademark, or violation of trade secrets relative to the Licensor's performance hereunder. Either party shall notify the other promptly of any such claims, and the Licensee shall give to the Licensor full authority and opportunity to settle such claims, and shall reasonably cooperate with the Licensor in obtaining information relative to such claims.

(xi) In the event the Licensor becomes unwilling or unable to furnish support required by the Contract for the Licensed Software, the Licensor shall, upon written request of the Licensee, provide with the greatest possible dispatch all Licensed Software back-up documentation including proprietary information other than agreed excluded documentation. In this event, (1) the Licensee shall be permitted full use of all Licensed Software and documentation as long as the System is operational and (2) the Licensee may modify, or have modified, the Licensed Software for feature enhancement or proper equipment operation and becomes the owner of such modifications for all purposes, including patenting, copywriting, sale, or license thereof. Agreed excluded documentation is Licensed Software back-up documentation described in the first sentence of this section (2)(xi) which (A) is proprietary information of a third party, (B) was specifically described at the pre-bid technical session and individually identified in an attachment to the Bid, and (C) RUS and the Licensee agree, before bids are opened, may be excluded from the requirements of this section (2)(xi). In the event the Licensor furnishes agreed excluded documentation and the Licensee exercises its rights under this section (2)(xi), the Licensor shall use its best efforts to provide such agreed excluded information to the Licensee, or obtain continuing support agreements from the parties retaining legal rights to the excluded documentation. Licensor agrees that certain Licensed Software cannot be excluded from the requirements of this section (2)(xi) including, but not limited to, software, the absence or improper operation of which would significantly impair the operation of the System, would significantly impair the ability of the Licensee to generate revenue, or would pose a risk to RUS loan security.

(xii) A breach of this License by the Licensor is a breach of the Contract. Therefore, the remedies specified in the Contract shall apply.

(xiii) The Licensee shall have thirty (30) days after receipt of written notice from the Licensor to correct any breach of this License. Damages payable by the Licensee for its breach of this License shall not exceed the total Contract price. The Licensor shall not terminate this License unless:

(A) The Licensor has given RUS sixty (60) days notice before termination; and

(B) RUS agrees with the Licensor that termination is the only method available to prevent significant harm to the Licensor from additional Licensee defaults.

(xiv) The obligations of Licensee and Licensor and any successors in title under this Agreement shall survive the termination of this Agreement and continue after any termination of rights granted hereunder.

(xv) Licensee and Licensor agree that it will not, without the prior written permission of the other party, use in advertising, publicity, packaging, labeling, or otherwise, any trade name, trademark, trade device, service mark, symbol, or any other identification or any abbreviation, contraction, or simulation thereof owned by the other party or any of its affiliates or used by the other party or any of its affiliates to identify any of their products or services, unless otherwise agreed by the parties.

(xvi) This Software License Agreement shall prevail notwithstanding any conflicting terms or legends which may appear on or in the Licensed Software.

(xvii) If any Section or part thereof, in this Agreement shall be held to be invalid or unenforceable in any jurisdiction in which this Agreement is being performed, then the meaning of such section or part shall be construed so as to render it enforceable, to the extent feasible; and if no feasible interpretation would save such section or part, it shall be severed from this Agreement and the remainder shall remain in full force and effect. However, in the event such section or part is considered an essential element of this Agreement, the parties shall promptly negotiate a replacement therefor.

(xviii) This Software License and any amendments thereto, or revisions thereof, are subject to RUS approval.

LICENSOR

Company

Name _____

By _____

Title _____

Date _____

Licensee

Company

Name _____

By _____

Title _____

Date _____

[End of clause]

(d) *Contract amendments.* (1) The general requirements for contract amendments are set forth in §1753.11.

(2) Equipment contract amendments shall be prepared on RUS Contract Form 238, Construction or Equipment Contract Amendments.

(e) *Additions.* When additions to existing central office equipment are required:

(1) A proposal shall be requested from the supplier.

(2) The borrower shall prepare a plan containing an outline of the proposed use of the equipment, the proposal from the supplier and an estimate of the installation cost, and submit it to the GFR.

(3) After RUS approval of the supplier's proposal and the borrower's plan, the purchase may be made using RUS Contract Form 545 or, when applicable, the procedures contained in subpart I.

(4) If the purchase is to be made by contract, three executed copies of the contract with attachments are to be submitted to the RUS.

(5) Installation of the central office equipment and materials procured by RUS Contract Form 545 may be made in accordance with subpart I, if applicable, or by an approved FAP.

(f) *Preinstallation conference.* RUS recommends, but does not require, that the borrower hold a preinstallation conference, attended by the borrower, its engineer, equipment installers, and if possible the GFR, prior to the beginning of the installation of the central office equipment.

[54 FR 39267, Sept. 25, 1989. Redesignated at 55 FR 39397, Sept. 27, 1990, and amended at 59 FR 17679, Apr. 14, 1994]

§1753.39 Closeout documents.

Closeout of RUS Contract Form 525, Central Office Equipment Contract (Including Installation), and RUS Contract Form 545, Central Office Equipment Contract (Not Including Installation), shall be conducted as follows:

(a) *Contract amendments.* The borrower shall prepare and arrange for the execution and submission to RUS of any required contract amendments so that any changes in either contract will have been approved prior to the time the closeout documents are prepared. RUS Contract Form 238, Construction or Equipment Contract Amendment, shall be used for this purpose.

(b) *Taxes.* Under the terms of RUS Contract Forms 525 and 545, the bid prices do not include any amounts which are or may be payable by the bidder or the borrower on account of taxes imposed upon the sale, purchase or use of equipment, material and software covered by the contracts. If any such tax is paid by the bidder, the contract requires that the amount is to be stated separately on all invoices and paid by the borrower.

(c) *Acceptance tests.* The borrower will perform acceptance tests as part of the partial closeout and final closeout of RUS Contract Form 525. Tests that will demonstrate compliance with the requirements of 7 CFR 1755.522 are contained in RUS Bulletin 1753E–201. Other tests demonstrating compliance will be acceptable. RUS Bulletin 1753E–201 is available from RUS, Program Support and Regulatory Analysis, STOP 1522, 1400 Independence Ave. SW., Washington, DC 20250–1522.

(d) *Grounding system audit.* A grounding system audit shall be performed and found acceptable for equipment provided under Form 525 and 545 Contracts, prior to placing a central office or remote switching terminal into full service operation. The audits are to be

conducted in accordance with guidelines contained in the applicable sections of RUS Form 522 ''General Specification for Digital, Stored Program Controlled Central Office Equipment.'' The audits shall be performed by the contractor and borrower for Form 525 equipment and by the borrower for Form 545 equipment.

(e) *Partial Closeout Procedure.* Under conditions set forth in RUS Contract Form 525, a contractor may, when approved by the borrower, receive payment in full for central offices and their respective associated remote switching terminals upon completion of the installation without awaiting completion of the project where the contractor is to receive such payment, the procedure contained in the applicable sections of RUS Contract Form 525 shall be followed. In addition to complying with the appropriate partial closeout procedure contained in RUS Contract Form 525, the borrower shall:

(1) Assemble and distribute the closeout documents specified in appendix B.

(2) Submit one copy of Form 754 to RUS with the FRS, requesting the remaining funds due the contractor on the central offices and associated remote switching terminals involved.

(3) On receipt of the advance of loan funds, make prompt payment to the contractor.

(f) *Final Contract Closeout Procedure.* The documents required for the final closeout of the central office equipment contracts, RUS Contract Forms 525 and 545, are listed in appendix B, which also indicates the number of copies and their distribution. The procedure to be followed is outlined below:

(1) The borrower shall:

(i) Immediately following completion of the last central office equipment installation, arrange with the contractor's installer, connecting company (where necessary), and the GFR for performance of the acceptance tests of offices not previously tested. The date for testing should be established so that the installer will not be required to return to the site for the sole purpose of assisting in these tests. Acceptance tests shall be performed within 30 days of completion of the installation, unless otherwise requested in writing by the contractor and approved in writing by the borrower.

(ii) When the acceptance tests have been satisfactorily completed and the contractor has corrected all the discrepancies:

(A) Prepare and assemble the documents listed in appendix B, Documents Required to Close Out Central Office Equipment Contracts.

(B) Notify the GFR that the project is ready for final RUS inspection.

(iii) Make the documents listed in appendix B available for GFR review on the date of final inspection.

(iv) Distribute the documents as indicated in appendix B, including submission to the GFR of all documents required by RUS.

(2) The documents required and the procedure to be used for equipment purchased and/or installations made using the method of minor construction are set forth in subpart I.

(g) Final payment shall be made according to the payment terms of the contract.

[54 FR 39267, Sept. 25, 1989. Redesignated at 55 FR 39397, Sept. 27, 1990, and amended at 59 FR 31126, June 17, 1994; 59 FR 43717, Aug. 25, 1994; 62 FR 32477, June 16, 1997]

§§ 1753.40—1753.45 [Reserved]

Subpart F—Outside Plant Major Construction by Contract

SOURCE: 54 FR 39267, Sept. 25, 1989, unless otherwise noted. Redesignated at 55 FR 39397, Sept. 27, 1990.

§ 1753.46 General.

(a) This subpart implements and explains the provisions of the loan documents setting forth the requirements and procedures to be followed by borrowers when outside plant major construction by contract is financed by loan funds. Terms used in this subpart are defined in § 1753.2 and RUS Contract Form 515.

(b) The contract method for major construction is described in § 1753.5(b).

(c) The two contract forms which may be used for major outside plant construction are Form 515 and Form 773. Limitations on the applicability of these forms shall be as follows:

(1) Form 515 shall be used for major outside plant construction projects which will be competitively bid. The contract contains plans and specifications and has no dollar limitation. See §§1753.47, 1753.48 and 1753.49.

(2) A Form 515 contract which is for less than $200,000, may, at the borrower's option, be negotiated. See §1753.48(b).

(3) Form 773 shall be used for major outside plant projects which may not be competitively bid, and which cannot be designed and staked at the time of contract execution. Projects of this nature include routine line extensions and placement of subscriber drops. The Form 773 contract is limited to a maximum of $200,000. In any twelve month period, RUS will not finance more than $400,000, or ten per cent (10%) of the borrower's previous year's outside plant total construction, whichever is greater, in Form 773 contracts for a borrower. This limitation includes all major and minor outside plant construction performed under Form 773 contracts, and is determined by the date the Form 773 contract is executed. See 7 CFR §1753.50.

[54 FR 39267, Sept. 25, 1989. Redesignated at 55 FR 39397, Sept. 27, 1990, and amended at 59 FR 43717, Aug. 25, 1994]

§1753.47 Plans and specifications (P&S).

(a) *General.* (1) Prior to the preparation of P&S for the construction project:

(i) A review shall be made of the outside plant requirements, and the Loan Design (LD) shall be revised to reflect any needed changes (See §1753.3).

(ii) Deviations from the approved LD (7 CFR part 1737) must be approved by RUS (See §1753.3).

(2) The standard RUS specifications required for construction of outside plant facilities are:

(i) RUS Form 515a (Bulletin 345–150)—Specifications and Drawings for Construction of Direct Buried Plant.

(ii) RUS Form 515c (Bulletin 345–151)—Specifications and Drawings for Conduit and Manhole Construction.

(iii) RUS Form 515d (Bulletin 345–152)—Specifications and Drawings for Underground Cable Installation.

(iv) RUS Form 515f (Bulletin 345–153)—Specifications and Drawings for Construction of Pole Lines and Aerial Cables.

(v) RUS Form 515g (Bulletin 345–154)—Specifications and Drawings for Service Entrance and Station Protector Installation.

(b) *Preparation of plans and specifications.* Each set of plans and specifications shall include:

(1) RUS Contract Form 515, ''Telephone System Construction Contract (Labor and Materials).''

(2) The specifications described in paragraph (a)(2) of this section as specified by the borrower in the RUS Contract Form 515.

(3) Description of special assembly units and guide drawings, if any.

(4) Key, detail, and cable layout maps.

(5) RUS Contract Form 787, ''Supplement A to Construction Contract, RUS Contract Form 515,'' when the borrower proposes to provide any materials to the contractor. The borrower shall not order materials for a contractor without RUS approval. In such cases the borrower must attach Form 787 and a ''List of Owner's Materials on Hand'' and/or a ''List of Materials Ordered by Owner but Not Delivered'' to contract Form 515 (See §1753.48(f) of this part). Any materials furnished under Supplement A shall be listed in RUS Bulletin 344–2 unless special RUS approval has been received by the borrower to use unlisted materials.

(c) *Submission of plans and specifications to RUS.* (1) Two sets of the plans and specifications and one copy of the ''Check List for Review of Plans and Specifications,'' RUS Form 553, OMB control number 0572–0062, signed by the borrower's engineer, shall be furnished to the GFR.

(2) If RUS approves the P&S, RUS will return one set to the borrower.

[54 FR 39267, Sept. 25, 1989. Redesignated at 55 FR 39397, Sept. 27, 1990, 55 FR 53488, Dec. 31, 1990]

§1753.48 Procurement procedures.

(a) *Sealed competitive bidding*—(1) *Qualifying bidders.* (i) The borrower is responsible for selecting qualified contractors to bid on the project. See

§ 1753.8(a)(3). Questions relating to bidders' qualifications shall be resolved prior to the pre-bid conference.

(ii) RUS Form 274 or its equivalent, supplemented by RUS Form 276, shall be used for the submission of bidders' qualifications for all types of construction and for the required information on the bidder and subcontractors.

(2) *Invitations to bid*— The borrower shall solicit bids as set forth in § 1753.8(a)(2). Invitations shall be sent to at least 6 prospective bidders.

(3) *Pre-bid conference.* (i) Representatives of the borrower and its engineer shall be present at the pre-bid conference at the time and place designated in the Notice to Bidders. The borrower shall invite the GFR to attend the pre-bid conference.

(ii) The purpose of the pre-bid conference is to acquaint the bidders with the scope and special considerations of the project and to clarify any concerns the bidders may have.

(iii) No proposals shall be considered from bidders that do not attend the pre-bid conference unless the bidder has been notified by the engineer that such bidder's attendance has been waived. Attendance can be waived if, in the judgment of the engineer, the bidder would gain no additional understanding of the construction project by attending the pre-bid conference.

(iv) The borrower shall obtain from the engineer the minutes of the pre-bid conference and shall distribute them to all potential bidders.

(v) When fewer than three bidders have been qualified to submit bids, RUS written approval must be obtained to proceed with requesting bids.

(4) *Bid openings.* (i) Bid openings and award of contract shall be conducted in accordance with § 1753.8(a).

(ii) Two copies of the assembly unit sections of the apparent lowest responsive bid accepted by the borrower shall be sent to RUS.

(b) *Negotiated bidding.* (1) Competitive bids are not required for outside plant construction that is estimated to cost less than $200,000 labor and materials. The borrower shall obtain RUS approval of the plans and specifications before it selects the contractor for negotiated bidding.

(2) The procedures to be followed are contained in § 1753.8(b) and paragraphs (3) and (4) of this section.

(3) *Negotiation conference.* (i) The borrower shall schedule a conference to be attended by representatives of the engineer, the borrower and the contractor selected for negotiations. The borrower shall invite the GFR to attend this conference.

(ii) The purpose of the negotiation conference is to acquaint the contractor with the scope and special considerations of the project and to answer any questions.

(iii) The borrower shall obtain from the engineer notes covering the negotiation conference and shall distribute them to all attendees.

(4) Two copies of the assembly unit sections of the negotiated contractor's proposal shall be sent to the GFR for approval.

(c) *Contract amendments.* The borrower shall prepare contract amendments in accordance with § 1753.11 on RUS Contract Form 526, Construction Contract Amendment.

(d) *Subcontracts.* The RUS requirements for subcontracts and the procedures to be followed are set forth in § 1753.9.

(e) *Preconstruction conference.* The borrower shall conduct a conference, attended by the borrower, contractor, subcontractors, resident engineer, and the GFR, prior to the beginning of cable placement, to resolve any questions pertaining to the construction. Results of the conference shall be provided to each conference participant (See § 1753.10).

(f) *Owner-furnished materials.* When the borrower furnishes materials under RUS Contract Form 787, Supplement A to Construction Contract, these steps shall be followed:

(1) Materials on hand to be furnished by the borrower shall be released to the contractor at the start of construction. Materials on order but not received shall be provided to the contractor as they become available. The borrower shall obtain from the contractor a written receipt for all such materials delivered.

(2) Materials on hand, until released to the contractor, shall be covered by fire and either wind-storm or extended

coverage insurance, exclusive of materials stored in the open and not within 100 feet of any building. Poles, wherever stored, shall be covered by fire insurance. All insured values must be at least 80 percent of the cash value of the property insured.

(3) Subject to adjustment at the time of final settlement, the borrower shall obtain from the contractor monthly invoices that show credit to the borrower, at the prices quoted in Form 787, Supplement A, for all materials furnished by the borrower and installed by the contractor during the preceding month.

(4) Any materials furnished by the borrower remaining as surplus at the completion of construction shall be returned to the borrower. For such materials, the borrower shall furnish a written receipt to the contractor and credit the contractor at the prices quoted in Supplement A.

(g) *Changes or corrections in construction.* (1) When changes or corrections in construction are necessary, and the cost of such changes or corrections is properly chargeable to the borrower, the borrower shall have its engineer prepare and sign four copies of a Construction Change Order, RUS Form 216, obtain borrower's approval and forward the four copies to the contractor. Receipt of the executed Construction Change Order by the contractor will constitute authorization to proceed with the changes or corrections.

(2) When the changes or corrections have been made, the borrower shall have the contractor complete the form, itemizing the costs in accordance with the terms of the contract, and return three copies to the borrower's engineer. A copy of each change order shall be attached to each copy of the construction inventory required to close out the contract.

§1753.49 Closeout documents.

(a) *General.* The borrower shall be responsible for preparing the closeout documents with, if necessary, the assistance of the GFR.

(b) *Documents required.* Appendix C lists the documents required to closeout the Form 515 construction contract.

(c) *Closeout procedure:* (1) After construction has been completed in accordance with the plans and specifications, and acceptance tests have been made, the borrower shall arrange the time for a final inspection to be made by the borrower's engineer, the contractor, the GFR and a representative of the borrower.

(2) After inspection, the borrower shall prepare and distribute the final inventory documents as indicated on appendices C and D. The documents listed for RUS shall be submitted to the GFR. The approved final inventory is considered the final contract amendment. An extension to the contractor's bond is required when the total inventory price exceeds the maximum contract by more than 20 percent.

(3) Final payment shall be made according to the payment provisions of Article III of Form 515.

[54 FR 39267, Sept. 25, 1989. Redesignated at 55 FR 39397, Sept. 27, 1990, and amended at 59 FR 43717, Aug. 25, 1994]

§1753.50 Construction by Form 773 contract.

(a) The borrower shall prepare the contract form and provide such details of construction as may be available. Compensation may be based upon unit prices, hourly rates, or another mutually agreeable basis.

(b) Neither the selection of the contractor nor the contract requires RUS approval.

(c) Borrowers are urged to obtain quotations from several contractors before entering into a contract to be assured of obtaining the lowest cost.

(d) The borrower must ensure that the contractor selected meets all Federal and State requirements, and that the contractor maintains the insurance coverage required by the contract for the duration of the work. See 7 CFR part 1788.

(e) The borrower shall finance major construction under the Form 773 contract with general funds and obtain reimbursement with loan funds when construction is completed and an executed Form 771 has been submitted to RUS.

(f) If the contract exceeds $100,000, a contractor's bond shall be required. See 7 CFR part 1788.

(g) When the construction is completed to the borrower's satisfaction, the borrower shall obtain from the contractor a final invoice and an executed copy of RUS Form 743, Certificate of Contractor and Indemnity Agreement.

(h) The closeout document for the Form 773 contract is RUS Form 771. See § 1753.81 for the requirements for completing Form 771.

(i) An original and two copies of Form 771 shall be sent to the GFR. The GFR may inspect the construction, and will initial and return the original and one copy to the borrower.

(j) The original Form 771 shall be submitted with an FRS to RUS only in conjunction with a request for an advance of loan funds for the work.

[59 FR 43717, Aug. 25, 1994]

§§ 1753.51—1753.55 [Reserved]

Subpart G—Outside Plant Major Construction by Force Account

SOURCE: 55 FR 3572, Feb. 2, 1990, unless otherwise noted. Redesignated at 55 FR 39397, Sept. 27, 1990.

§ 1753.56 General.

(a) This subpart implements and explains the provisions of the loan documents setting forth the requirements and the procedures to be followed by borrowers for outside plant major construction by the force account method with RUS loan funds. Terms used in this subpart are defined in § 1753.2 and RUS Contract Form 515.

(b) A borrower shall not use the force account method for construction financed with loan funds unless prior RUS approval has been obtained.

(c) Generally, RUS will not approve the force account method for major outside plant construction for the initial loan to a borrower.

(d) The Force Account Proposals (FAPs) are subject to review and approval by RUS.

(e) The FAP is approved by RUS on the basis of estimated labor and material costs. The FAP is closed based on the borrower's actual cost of performing the construction. RUS will provide loan funds only up to the amount determined by the completed assembly units priced at the unit prices in the approved FAP.

(Approved by the Office of Management and Budget under control number 0572–0062)

§ 1753.57 Procedures.

(a) *The request.* (1) The borrower shall submit to RUS a certified copy of the board resolution or a letter signed by an authorized corporate official requesting approval to use the force account method of construction. The request shall state the advantages of the force account method of construction and provide the following information:

(i) The scope of the construction to be undertaken, stating briefly the facilities and equipment to be installed and other pertinent data.

(ii) The name and qualifications of the construction supervisor who will be directly in charge of construction, the names and qualifications of the construction foremen, and the availability of qualified construction personnel. The construction supervisor must have at least 5 years outside plant construction experience with at least 2 years at the supervisory level on RUS financed projects. Construction foremen must have at least 3 years of outside plant construction experience.

(iii) The availability of equipment for construction, exclusive of equipment needed for normal operation and maintenance.

(2) [Reserved]

(b) *Force Account Proposal (FAP).* Upon receiving RUS approval to use the force account method, the borrower, prior to any construction activity or the purchase of materials or equipment, shall submit to RUS two copies of its FAP. The FAP shall consist of:

(1) The RUS Contract Form 515 and appropriate supporting attachments that normally would be provided as plans and specifications for contract construction. See § 1753.47.

(2) The cost estimate, using Form 515 as a convenient means of showing the following:

(i) The quantity and cost estimates of the various assembly units required. ''Labor and other'' cost will not include the cost of engineering, legal,

and other professional services, interest during construction, preliminary survey and investigation charges, and right-of-way easement procurement costs.

(ii) A list identifying materials or construction for which loan funds will not be requested.

(3) The estimated completion time.

(c) *Storage of materials.* All materials ordered for the construction shall be stored separate from normal maintenance materials.

(d) *Construction*—(1) *Preconstruction conference.* The borrower shall arrange a conference, attended by the manager, construction supervisor, construction foremen, resident engineer and the GFR prior to the beginning of construction to clarify any questions pertaining to the construction. Notes of the conference shall be provided to each conference participant.

(2) *Construction schedule and progress reports.* The borrower shall obtain from the engineer a construction schedule and submit one copy to the GFR. The schedule shall include the starting date and a statement indicating that materials are either delivered or deliveries are assured to permit construction to proceed in accordance with the construction schedule. The borrower shall obtain from the engineer progress reports and submit one copy of each to the GFR. RUS Form 521 may be used for the construction schedule and the progress report.

(3) *Borrower's management responsibilities.* (i) Obtain all right-of-way easements, permits, etc., prior to construction.

(ii) Maintain records on all expenditures for materials, labor, transportation, and other costs of construction, in order that all costs may be fully accounted for upon completion of construction.

(iii) Ensure that all the required inspections and tests are made.

(4) *Engineer's responsibilities.* (i) Inspect and inventory construction as completed.

(ii) Require timely corrections and cleanup.

(iii) Perform acceptance tests as construction is completed.

(iv) Provide ''as built'' staking sheets of completed construction when the final inspections are made.

(v) Maintain accurate and current inventories of completed construction.

(5) *Construction supervisor's responsibilities.* (i) Correct construction errors as construction progresses.

(ii) Maintain an accurate inventory of completed construction.

(iii) Perform cleanup as construction is completed.

(iv) Perform all the inspections and acceptance tests a contractor would be required to make under the construction contract.

(v) Promptly perform cleanup required after final inspection.

§ 1753.58 Closeout documents.

(a) *General.* (1) This section outlines the procedure to be followed in the preparation of closeout documents for the FAP.

(2) The period between the completion of construction and submission of the closeout documents to RUS should not exceed 60 days.

(b) *Documents.* The documents required to close the FAP are listed in appendix E. The following is a brief description of the closeout documents:

(1) Final Inventory and Certificate of Engineer, RUS Forms 817, 817a, and 817b are prepared by the engineer.

(i) Assembly units inventoried on Form 817a shall be grouped according to the applicable plant account classification as specified in 7 CFR part 1770, Revision and Codification of RUS's Accounting System Requirements for Telephone Borrowers of the Rural Utilities Service.

(ii) On Form 817, the engineer provides a comparison between the final inventory total price (based on assembly prices in the approved FAP) and the actual cost of construction (from the borrower's accounting records).

(iii) The actual costs from the borrower's accounting records are not to include costs for (a) engineering, legal and other professional services, (b) interest during construction and (c) preliminary survey charges.

(2) Certificate, ''Buy American,'' RUS Form 213.

(3) Key Map, prepared by the engineer, is a permanent record of the general location of the lines and facilities of the borrower's system.

(4) Detail Maps, prepared by the engineer, show the details of the outside plant of the telephone system, the location of subscribers and other pertinent operating details.

(5) Staking Sheets, prepared by the engineer, show by assembly units the outside plant constructed, and serve as the permanent outside plant record.

(6) Tabulation of Staking Sheets, prepared by the engineer, is a summary of the assembly units shown on the staking sheets for preparing the final inventory.

(7) Treated Forest Products Inspection Reports, prepared by an RUS approved inspection company, certify that wood products furnished for construction meet all requirements of the RUS specifications.

(c) *Closeout procedures.* (1) The borrower shall notify the GFR when the project is ready for final inspection.

(2) The GFR shall make the final inspection accompanied by the engineer and the borrower.

(3) The borrower shall correct all deficiencies found during the final inspection.

(4) The borrower may request the assistance of an RUS field accountant to review the borrower's record of construction expenditures and assist the borrower with any accounting problems in connection with construction expenditures.

(5) After inspection, the final inventory documents shall be assembled and distributed as indicated on appendix E. The documents listed for RUS are to be submitted to the GFR.

(6) Upon approval of the closeout documents, RUS will notify the borrower of approval and of any adjustments to be made in funds advanced in connection with the construction.

(d) The above are not intended to be a complete description of the requirements of the documents relating to RUS's closeout procedure. Refer to the documents for additional requirements.

§§ 1753.59—1753.65 [Reserved]

Subpart H—Purchase and Installation of Special Equipment

SOURCE: 54 FR 39267, Sept. 25, 1989, unless otherwise noted. Redesignated at 55 FR 39397, Sept. 27, 1990.

§ 1753.66 General.

(a) This subpart implements and explains the provisions of the Loan Documents setting forth the requirements and the procedures to be followed by borrowers in purchasing and installing special equipment financed with loan funds.

(b) Terms used in this subpart are defined in § 1753.2 and RUS Contract Forms 397 and 398.

(c) Special equipment purchased with loan funds must be included in the List of Materials Acceptable for Use on Telephone Systems of RUS Borrowers (See Bulletin 344–2) and meet RUS's standards and specifications (See 7 CFR part 1755) unless otherwise approved by RUS.

(d) Borrowers must obtain RUS review and approval of the LD for their telephone systems. Applications of special equipment not included in an approved LD must conform to the modernization plan as required by 7 CFR part 1751, subpart B, and must be submitted to RUS for review and approval.

(e) RUS Form 397 and applicable specifications shall be used for the purchase of special equipment for major construction on a furnish and install basis.

(f) RUS Form 398 and applicable specifications shall be used for the purchase of equipment for major construction on a furnish only basis. The procedures provided in subpart I, if applicable, or a FAP approved by RUS may be used for the installation of special equipment purchased with a Form 398 contract.

(g) For special equipment purchases for minor construction, the borrower may at its option use the Methods of Minor Construction procedures contained in subpart I or the purchase procedures contained in this subpart H.

(h) Some types of special equipment contain software. See subpart E for RUS software licensing requirements.

[54 FR 39267, Sept. 25, 1989. Redesignated at 55 FR 39397, Sept. 27, 1990, and amended at 58 FR 66259, Dec. 20, 1993; 59 FR 17464, Apr. 13, 1994]

§ 1753.67 Contracts and specifications.

(a) Special Equipment Contract, RUS Form 397 shall be used to purchase equipment on a furnish and install basis.

(b) Special Equipment Contract, RUS Form 398 shall be used to purchase equipment on a furnish only basis.

(c) The equipment specifications must accompany the selected contract form.

(1) Each specification consists of performance specifications, installation requirements (if applicable) and application engineering requirements.

(2) RUS specifications for the Special Equipment Contract are listed in 7 CFR part 1755.

§ 1753.68 Purchasing special equipment.

(a) *General.* (1) Equipment purchases are categorized as initial equipment purchase, equipment additions to existing systems and new system additions.

(i) An initial equipment purchase is a first time purchase by a borrower of a complete system of special equipment.

(ii) Equipment additions to existing systems are additions of components to complete operating systems to increase system capacity that require components made by the manufacturer of the existing system.

(iii) New system additions are purchases of complete systems of special equipment when the purpose can be accomplished either with equipment of the same type and manufacture as other complete operating systems in the borrower's system, or with complete systems of special equipment from other manufacturers.

(iv) Where equipment is obtained under a Form 398 Contract, the borrower shall require the supplier to provide a detailed proposed bonding and grounding plan and detailed installation information. The installation information is to enable acceptance testing by the borrower upon completion of the installation.

(2) For initial equipment purchases that qualify as major construction, the borrower shall obtain proposals from at least three suppliers of equipment of different manufacturers.

(3) For equipment additions to increase the capacity of existing systems, the borrower may negotiate for equipment of a specific type and manufacture. RUS approval to negotiate in this instance is not required if these additions were specifically described in the LD approved by RUS

(4) For new system additions, the borrower may request RUS approval to negotiate for additional equipment for the purpose of standardization on a system basis, provided RUS approved the procurement method used for the initial equipment purchase. RUS approval to negotiate must be obtained before release of the P&S to the seller.

(5) RUS will not approve negotiation with a seller of non-domestic equipment for the purpose of standardization, because such a purchase does not meet the ''Buy American'' provision.

(6) RUS recommends, but does not require, that borrowers include installation by the seller for initial installations of special equipment that qualify as major construction.

(7) Special equipment may be installed by the borrower if it has qualified personnel and test equipment available to install the equipment and make the required acceptance tests, and written approval is given by RUS.

(8) Installations, whether by the borrower or the seller, must meet the installation requirements of Form 397 specifications. A copy of the acceptance tests results must be attached to the closeout documents or work order summary.

(9) Detailed considerations and guidelines for the preparation of the specifications for the various applications of special equipment can be found in RUS Telecommunications Engineering and Construction Manuals.

(10) The borrower must obtain authorization from the Federal Communications Commission (FCC) to construct and operate radio transmitting

equipment. Evidence of FCC authorization is required for RUS contract approval. Where required, the borrower must obtain approval of state regulatory bodies regarding tariffs and related matters.

(b) *Procurement procedures*—(1) *General.* The following are the procurement procedure steps required for the purchase of special equipment by borrowers.

(2) *Initial equipment purchase.* (i) The borrower prepares the P&S and sends two copies to the GFR for approval.

(ii) RUS approves the P&S in writing (or notifies the borrower of any reason for withholding approval).

(iii) The borrower obtains proposals from three or more sellers.

(iv) The borrower selects the proposal to be accepted and sends notification of this selection supported by a summary of all proposals and an engineer's recommendation to RUS for approval.

(v) RUS approves the proposal selection in writing (or notifies the borrower of any reason for withholding approval).

(vi) The borrower sends three executed contracts including specifications to RUS for approval.

(vii) After RUS approval of the contract, one copy will be returned to the borrower and one copy will be sent to the seller.

(3) *Equipment additions to existing systems.* Purchase procedures for equipment additions to existing systems are the same as for initial system purchase except that the borrower may negotiate for equipment of a specific type and manufacture instead of obtaining proposals from three or more sellers.

(4) *New system additions.* (i) The borrower prepares the P&S and sends two copies to the GFR for approval. The borrower may request RUS approval to negotiate for the purpose of standardization on a system basis.

(ii) RUS notifies the borrower in writing of RUS's decision as to whether to approve the P&S and whether to allow the borrower to negotiate for specific equipment.

(iii) The remainder of the purchase procedure for new system additions is the same as for initial equipment purchase.

(c) *Contract amendments.* (1) The general requirements for contract amendments are set forth in § 1753.11.

(2) The borrower shall prepare any required amendments to special equipment contracts, arrange for the execution by all parties, and submit these amendments to RUS, so that any changes in the contract will have been submitted by the time closeout documents are submitted. RUS Form 238, Construction or Equipment Contract Amendment shall be used for this purpose.

(d) *Closeout procedures*—(1) *Acceptance tests for Form 397.* (i) Immediately upon completion of the installation and alignment of the equipment, the borrower shall arrange with the contractor's installer and the GFR for acceptance tests.

(ii) The borrower shall obtain from the contractor, in writing, the results of all inspections and tests made by the contractor as required in the specifications. The borrower will analyze the test results and determine whether the performance of the equipment meets the contract specifications.

(2) *Acceptance tests for Form 398.* (i) Upon completion of the installation and alignment of the equipment (under this contract the installation alignment will be by other than the seller) the borrower shall perform all the inspections and tests outlined in the specifications.

(3) *Closeout documents.* (i) When the acceptance tests have been completed and all deficiencies have been corrected, the borrower shall:

(A) Assemble the documents listed in appendix F that are required for the closeout of the special equipment contract.

(B) Notify the GFR that the installation is ready for final acceptance.

(C) Make available for the GFR the documents listed in appendix F.

(ii) The GFR reviews the final documents and distributes all the documents as indicated in appendix F.

(iii) Final payment shall be made according to the payment terms of the contract.

[54 FR 39267, Sept. 25, 1989. Redesignated at 55 FR 39397, Sept. 27, 1990, and amended at 59 FR 43718, Aug. 25, 1994]

§§1753.69—1753.75 [Reserved]

Subpart I—Minor Construction

SOURCE: 55 FR 3573, Feb. 2, 1990, unless otherwise noted. Redesignated at 55 FR 39397, Sept. 27, 1990.

§1753.76 General.

(a) This subpart implements and explains the provisions of the Loan Documents (as defined in 7 part CFR 1758) setting forth the requirements and procedures to be followed by borrowers for minor construction of telecommunications facilities using RUS loan funds. Terms used in this subpart are defined in §1753.2.

(b) [Reserved]

(Approved by the Office of Management and Budget under control number 0572–0062)

§1753.77 Methods of minor construction.

Minor construction may be performed by contract using RUS Contract Form 773. ''Miscellaneous Construction Work and Maintenance Services'', or by work order construction.

§1753.78 Construction by contract.

(a) RUS Form 773 shall be used for minor construction by contract. Compensation may be based upon unit prices, hourly rates, or another basis agreed to in advance by the borrower and the contractor. A single work project may require more than one contractor.

(b) The borrower shall prepare the contract form and attach any diagrams, sketches and tabulations necessary to specify clearly the work to be performed and who shall provide which materials. Neither the selection of the contractor nor the contract requires RUS approval.

(c) Borrowers are urged to obtain quotations from several contractors before entering into a contract to be assured of obtaining the lowest cost. The borrower must ensure that the contractor selected meets all Federal and State licensing and bonding requirements, and that the contractor maintains the insurance coverage required by the contract for the duration of the work. (See 7 part CFR 1788)

(d) Upon completion and final inspection of the construction the borrower shall obtain from the Contractor a final invoice and an executed copy of RUS Form 743, Certificate of Contractor and Indemnity Agreement.

(e) RUS Contract Form 773 may also be used to contract for the maintenance and repair of telephone equipment and facilities. Generally, RUS will not finance maintenance and repair contracts.

[55 FR 3573, Feb. 2, 1990. Redesignated at 55 FR 39397, Sept. 27, 1990, and amended at 59 FR 43718, Aug. 25, 1994]

§1753.79 Construction by force account.

The borrower shall require that:

(a) Minor construction by the force account method be supervised by a competent foreman. The work shall be performed in accordance with all regulatory and safety codes.

(b) Daily time and material reports, referenced by the work project number, shall be kept to record labor and materials used as construction is performed.

(c) The construction foreman shall maintain a tabulation of all construction units installed.

§1753.80 Minor construction procedure.

(a) If the borrower performs minor construction financed with loan funds, the borrower's regular work order procedure shall be used to administer construction activities that may be performed entirely by a contractor under Form 773 contract, by work order, or jointly by work order and one or more contractors under Form 773 contracts.

(b) RUS financing under Form 773 contracts is limited in any twelve month period to the following amounts for the following discrete categories of minor construction. A borrower could, for example, receive financing of Form 773 contracts in a twelve month period in amounts up to $400,000 of central office equipment and $200,000 of special equipment and $200,000 of buildings. The date of the Form 773 contract is the date the Form 773 contract is executed.

(1) For outside plant construction, the limit is $400,000 or ten per cent

(10%) of the borrower's previous calendar year's outside plant total construction, whichever is greater.

(2) For central office eqiupment, the limit is $400,000.

(3) For special equipment, the limit is $200,000.

(4) For buildings, the limit is $200,000.

(c) A single minor construction project may be a discrete element of a somewhat larger overall project, such as the provision and installation of a standby power generator or heating/air conditioning equipment in connection with a building modification or expansion project or the splicing on a major cable placement project. It cannot be a portion, by dividing into smaller segments, of a discrete major construction project, such as the placement of a continuous cable facility.

(d) RUS approval must be obtained in advance for minor construction unless all of the following conditions are met:

(1) RUS has approved the engineering design.

(2) All standard RUS procedures are followed, including use of new materials listed in the List of Materials for Use on Telephone Systems of RUS Borrowers (Bul. 344–2) and the application of RUS construction practices. (See § 1753.6)

(3) The Standard Form 773 contract is used without modification.

(e) The borrower shall determine the scope of each proposed construction project and decide how it will be constructed. A work project number shall be assigned to which all charges for that project are referenced.

(f) The borrower shall maintain accounting and plant records sufficient to document the cost and location of all construction and to support loan fund advances and disbursements.

(g) Normally the borrower will finance minor construction with general funds and obtain reimbursement with loan funds when construction is completed and executed Form 771 has been submitted to RUS. If a borrower satisfies RUS of its inability to finance the construction temporarily with general funds, RUS may establish, on a case by case basis, a work order fund for specific construction projects. The work order fund will be closed upon receipt of an FRS and the executed Forms 771 for the specific projects for which the work order fund was established.

(h) RUS will advance funds to finance minor construction work projects only if all necessary documents, including an FRS and supporting data covering the project, are received within one year of the date construction of the project is completed.

[55 FR 3573, Feb. 2, 1990. Redesignated at 55 FR 39397, Sept. 27, 1990, and amended at 59 FR 43718, Aug. 25, 1994]

§ 1753.81 Inspection and certification.

(a) Upon completion and prior to closeout, minor construction must be inspected and certified to be in compliance with RUS construction standards, to be reasonable in cost, and to meet applicable codes. The certification is made by an experienced telephone engineer who is either licensed in the state where the inspection will be performed, or is a borrower's staff engineer, who meets the requirements of the ''employee in charge'' of force account engineering as described in subpart B of this part. The GFR will periodically audit the inspection of minor construction to ensure integrity of the procedure. RUS borrowers with less than 2000 subscribers may use the above procedure or have construction inspection performed by the GFR.

(b) Engineering services for minor construction may be contracted using RUS Form 245, Engineering Service Contract—Special Services. Costs for these services may be included in the costs for construction on the Form 771. (See subpart B of this part.

(c) Upon completion of construction, the borrower shall obtain the engineer's certification on RUS Form 771. An official of the borrower, designated by the board of directors, shall also execute the borrower's certification on Form 771.

[54 FR 39267, Sept. 25, 1989. Redesignated at 55 FR 39397, Sept. 27, 1990, and amended at 55 FR 53488, Dec. 31, 1990]

§ 1753.82 Minor construction closeout.

(a) For minor construction inspected by the borrower's engineer, an original and two copies of Form 771 shall be sent to the GFR. The GFR will initial and return the original and one copy.

(b) When funds are requested for minor construction, the original Form 771 signed or initialed by the GFR, shall be submitted with the FRS. Forms 771 should be submitted only with the FRS which they support. RUS does not encumber funds pursuant to Forms 771 unless an advance is made to the borrower. (See 7 CFR part 1744 subpart C).

§§ 1753.83—1753.90 [Reserved]

Subpart J—Construction Certification Program

SOURCE: 55 FR 3574, Feb. 2, 1990, unless otherwise noted. Redesignated at 55 FR 39397, Sept. 27, 1990.

§ 1753.91 General.

(a) This subpart implements and explains the provisions of the loan documents setting forth the requirements and procedures to be followed by borrowers accepting nomination for the construction certification program. Terms used in this subpart are defined in § 1753.2.

(b) [Reserved]

(Approved by the Office of Management and Budget under control number 0572–0062)

§ 1753.92 Policies and requirements.

(a) It is RUS policy that, as borrowers gain in experience and maturity, the advice and assistance rendered by RUS shall progressively diminish. Prior to approval of a loan, RUS may nominate certain borrowers to fulfill the responsibilities for administration and construction of projects financed with RUS loans. Borrowers who accept this nomination will be known as ''certification borrowers,'' and the program in which they participate will be known as the ''certification program.''

(b) Generally, initial loan borrowers are not eligible for the certification program.

(c) Generally, the factors which RUS will consider in selecting borrowers for the certification program will include:

(1) The experience of the staff of the borrower.

(2) The RUS assessment of the borrower's ability to handle the certification program requirements considering the size and complexity of the proposed construction in the LD.

(3) The history of the borrower in following RUS's policies and procedures.

(4) Other factors deemed relevant by RUS.

(d) Except as specifically stated in this subpart, certification borrowers must comply with all requirements applicable to other borrowers.

(e) RUS reserves the right at any time to require submission of construction documents or to remove the borrower from the certification program.

§ 1753.93 Responsibilities.

(a) *Responsibilities transferred to certification borrowers.* (1) Approval of engineering and architectural service contracts.

(2) Approval of P&S.

(3) Approval of price quotations and bids, except where the low price bid is not accepted.

(4) Approval of award of construction contracts and amendments.

(5) Approval of FAP's if RUS has approved the force account method of construction for the construction project.

(6) Inspection and certification of construction.

(7) Approval of closeout documents.

(8) Other responsibilities as may be specifically granted in writing by RUS.

(b) *Responsibilities retained by RUS.* (1) Approval to deviate from RUS requirements, except as provided in (a) above.

(2) Approval of use of loan funds for projects other than those included in the loan construction budget. See 7 CFR part 1744 subpart C.

(3) Approval of use of loan funds in excess of amounts included in the loan budget.

(4) Approval of force account methods of engineering and construction.

(5) Approval to make significant deviations from the work plan approved by RUS.

(6) Approval of interim construction.

(7) Approval to use materials not listed in the List of Materials Acceptable for Use on Telephone Systems of RUS Borrowers.

(8) Approval of field trials.

(9) Approval to modify or alter standard forms and contracts.

(10) Approval to open bids when fewer than the required number have been received.

(11) Approval of outside plant layouts.

(12) ''Buy American'' determinations.

(13) Other responsibilities not specifically transferred by this subpart or in writing by RUS.

§ 1753.94 Procedures.

(a) Certification borrowers shall appoint three certification officials. These appointments shall be subject to RUS approval.

(1) The ''Certifying Officer'' shall be an officer or employee of the borrower who is authorized to execute binding agreements. This officer shall sign all contracts, amendments, closeout documents and the certification on RUS Form 158, Certification of Contract or Force Account Proposal Approval, and RUS Form 159, Summary of Completed Construction.

(2) The ''Construction Certifier'' shall be an experienced telephone engineer who is either licensed in the state where the inspection will be performed, or is a borrower's staff engineer who meets the requirements of the ''employee in charge'' of force account engineering as described in subpart B of this part. RUS may determine that it will accept the certification only for matters within the staff engineer's area of specialization. In such cases the position of ''Construction Certifier'' shall be filled by more than one engineer. This official is responsible for certifying that the construction complies with all technical and code requirements.

(3) The ''Certification Coordinator'' shall administer the certification program and serve as the official point of contact for RUS. The certifying officer or construction certifier may also serve as the certification coordinator.

(b) Certification borrowers, shall submit and obtain RUS approval of a work plan before construction and related engineering begin.

(1) The work plan shall provide a description of the proposed construction and methods of purchasing in such detail as to enable RUS to monitor the construction program to ensure to its satisfaction that loan purposes are accomplished in an organized construction program.

(2) The work plan shall include the following:

(i) The names and qualifications of the proposed certification officials defined in § 1753.94(a).

(ii) A listing of the proposed work projects to accomplish the loan purposes showing the estimated cost, method of performing the construction, and the proposed commencement and completion dates for each work project. The proposed work projects shall be summarized on RUS Form 157, Construction Work Plan and Cost Distribution, or a form providing essentially the same information.

(iii) The proposed source of funds for meeting cost overruns if the total estimated cost of work projects exceeds the loan budget.

(iv) A statement signed by the borrower's certification officials and the GFR that the work plan is accurate and complete.

(c) Under the certification program, the borrower shall follow all standard RUS postloan engineering and construction procedures except that the approvals shown in § 1753.93(a) will be made by certification officials rather than RUS. The approvals noted in § 1753.93(a)(1), (4) and (5) will be reported immediately to RUS using RUS Form 158. Approval of closeouts, § 1753.93(a) (6) and (7), will be reported immediately on RUS Form 159.

(d) As the construction program progresses, the certification borrower shall request, by letter, RUS approval of any significant changes in work plan schedules and budgets and in certification officials.

§ 1753.95 Advance of loan funds.

Advance of loan funds needed to meet the certification borrower's current financial obligations are to be requested on RUS Form 481 for construction and engineering items supported by appropriate RUS Forms 158 and 159. For items other than construction or engineering, other supporting data shall be submitted. (See 7 CFR part 1744 subpart C.)

§ 1753.96 Certification addendum.

The certification borrower shall modify standard RUS forms of contract for use under the certification program by inserting an executed copy of the following certification addendum in each copy of the contract.

CERTIFICATION ADDENDUM

Permission has been obtained by the Owner to proceed with this contract under 7 CFR part 1753 subpart J, pursuant to which the references in the RUS construction document requiring approvals and other actions of the RUS Administrator will not apply unless RUS gives specific notice in writing to the affected parties that designated approval(s) or action(s) will be required. Certifications by the Contractor of amounts due and certifications of completions of work under the contract are to be construed to be rendered for the purpose of inducing the Rural Utilities Service or Rural Telephone Bank to advance funds to the Owner to make, or reimburse the Owner for, payments under this contract.

Date _____

Owner

By _____

Certifying Officer

Date _____

Contractor

By _____

Title

§§ 1753.97—1753.99 [Reserved]

APPENDIX A TO PART 1753—DOCUMENTS REQUIRED TO CLOSEOUT CONSTRUCTION OF BUILDINGS

Form furnished by RUS	Description	Use with		Prepared by			Number of copies	Distribution			
		Contract	Force account	Contractor	Architect/engineer	Borrower		Borrower	RUS	Architect	Contractor
238	Construction or Equipment Contract Amendment (Submit to RUS for approval, as required).	x			x		3		3		
181	Certificate of Completion (Contract Construction) (1).	x			x		3	1	1		1
181a	Certificate of Completion (Force Account Construction).		x		x		2	1	1		
231	Certificate or Contractor	x		x			2	1	1		
224	Waiver and Release of Lien (2 copies from each supplier).	x		x			2	1	1		
213	Certifcate (Buy American)	x		x			1	1			
284	Statement of Architect's Fee	x	x		x		3	1	1	1	
	Inventory-List Materials and Services Furnished by Borrower Upon Which Architectural Services Were Furnished. Show Cost (See Form 284).	x	x				3	1	1	1	
	Inventory-List Materials and Services Furnished by Borrower Upon Which Architectural Services Were Not Performed Show Cost.	x	x			x	3	1	1	1	
(2)	"As Built" Plans and Specifications	x	x		x		1	1			
	Guarantees, Warranties, Bonds, Operating or Maintenance Instructions, et cetera.	x		x			1	1			
	Architect/Engineer Seismic Safety Certification.	x	x		x		3	1	1		1

(1) Cost of Materials and Services Furnished by Borrower not to be Included in Total Cost on Form 181.
(2) When only Minor Changes Were Made During Construction, Two Copies of a Statement to that Effect from the Architect Will be Accepted in Lieu of the "As-Built" Plans and Specifications.

[59 FR 43718, Aug. 25, 1994]

APPENDIX B TO PART 1753—DOCUMENTS REQUIRED TO CLOSEOUT CENTRAL OFFICE EQUIPMENT CONTRACT

Form furnished by RUS	Description	Use with		Prepared by		Total No. of copies	Distribution		
		RUS form 525	RUS form 545	Contractor	Engineer		Borrower	Contractor	RUS
238	Construction or Equipment Contract Amendment (Submit to RUS for approval, if required, before following documents).	X	X		X	3			3
754	Certficate of Completion and Certificate of Contractor and Indemnity Agreement (If submitted, Form 744 is not required).	X		X	X	4	2	1	1
517	Results of Acceptance Tests (Prepare and distribute copies immediately upon completion of the acceptance tests of each central office).	X			X	2	1	1	
752a	Certificate of Completion-Not Including Installation		X		X	3	1	1	1
224	Waiver and Release of Lien (Two copies from each supplier).	X		X		2	1		1
231	Certificate of Contractor	X		X		2	1		1
213	Certificate (Buy American)	X	X	X		2	1		1
	Switching Diagram, as installed	X	X	X		2	2		
	Set of Drawings (Each set to include all the drawings required under the Specification RUS Form 522).	X	X	X		2	2		

[59 FR 43718, Aug. 25, 1994]

APPENDIX C TO PART 1753—DOCUMENTS REQUIRED TO CLOSEOUT TELEPHONE CONSTRUCTION CONTRACT RUS FORM 515

RUS Form No.	Description	Number of copies	Form available from RUS	Prepared by		Distribution		
				Engineer	Contractor	Borrower	Contractor	RUS
724	Final Inventory	3	x	x		1	1	1
724a	Final Inventory	3	x	x		1	1	1
	Contractor's Board Extension (When required).	3			x	1	1	1
281	Tabulation of Materials Furnished by Borrower.	3			x	1	1	1
213	Certificate (''Buy American'').	1	x		x	1		
	Listing of Construction Change Orders.	1						1
224	Waiver and Release of Lien (Two copies from each supplier).	2	x		x	1		1
231	Certificate of Contractor.	2	x		x	1		1
527	Final Statement of Construction.	3	x	x		1	1	1
	Reports on Results of Acceptance Tests.	2		x		1	1	
	Set of Final Staking Sheets.	1		x		1		
	Tabulation of Staking Sheets.	1		x		1		
	Correction Summary (legible copy).	1		x		1		
	Treated Forest Products Inspection Reports or Certificates of Compliance (Prepared by inspection company or supplier).	1				1		
	Final Key Map (when applicable).	1		x		1		1
	Final Central Office Area and Town Detail Maps.	1		x		1		1

[59 FR 43718, Aug. 25, 1994]

APPENDIX D TO PART 1753—STEP-BY-STEP PROCEDURE FOR CLOSING OUT TELEPHONE CONSTRUCTION CONTRACT—LABOR AND MATERIALS, RUS FORM 515

Sequence		By	Procedure
Step No.	When		
1	Prior to completion of construction.	Borrower's Engineer	Receives instructions from the GFR concerning the closeout procedure.
2	Upon completion of construction.	Borrower's Engineer	Prepares the following: 1 set of Key Maps, when applicable, which show work done under the construction contract marked with red pencil. 1 set of Detail Maps, which show work done under the construction contract marked with red pencil. 1 copy of Tabulation of Staking Sheets. 1 copy of tentative Final Inventory, RUS Forms 724, 724a.
3	After construction has been completed and acceptance tests made.	Borrower's Engineer	Forwards letter to the borrower with copies to the GFR stating that the project is ready for final inspection.
4	Upon receipt of letter from borrower's engineer.	GFR	Promptly arranges with borrower, borrower's engineer, and contractor for final inspection of construction. It is contemplated that final inspections will be made on sections of line as construction is completed, leaving a minimum amount to be inspected at this time.
5	When requested by the GFR.	RUS Field Accountant	Audits RUS Form 281, if borrower supplied part of the materials.
6	Inspection date scheduled	Borrower's Engineer	Shall have the following documents available for the GFR: 1 set of ''as constructed'' Key Maps (when applicable). 1 set of ''as constructed'' Detail Maps. 1 copy of the List of Construction Change Orders. 1 set of Final Staking Sheets. 1 copy of Tabulation Staking Sheets. 1 copy of Treated Forest Products Inspection Reports or Certificates of Compliance. 1 copy of tentative Final Inventory RUS Form 724, 724a. 1 copy of tentative Tabulation, RUS Form 231, if borrower furnished part of material. 1 copy of Report on Results of Acceptance Tests.
7	During inspection	Borrower's Engineer	Issues instructions to contractor covering corrections in construction found during inspection by GFR in the company of the borrower's engineer and the contractor or his/her representative.
8	During inspection	Contractor	Corrects defects in construction on basis of instructions from the borrower's engineer. The corrections should proceed closely behind the inspection in order that the borrower's engineer can check the corrections before leaving the system.
9	During inspection	Borrower's Engineer	With GFR inspects and approves corrected construction.
10	During inspection	Borrower's Engineer	Marks inspected areas on the Key Map, if available, otherwise on the Detail Maps.
11	Upon completion of inspection.	Borrower's Engineer	Prepares or obtains all the closeout documents listed in Appendix C. Makes distribution of the copies of the documents as indicated in Appendix C. Forwards the documents for RUS to the GFR.
12	After reviewing final documents.	RUS GFR	Reviews documents and distributes copies as indicated in Appendix C.
13	After signing final inventory	Borrower	Prepares and submits Financial Requirement Statement, RUS Form 481, requesting amount necessary to make final payment due under contract.
14	On receipt of final advance	Borrower	Promptly forwards check for final payment to contractor.
15	During next loan fund audit review after final payment to contractor.	RUS Field accountant	Makes an examination of borrowers construction records for (1) compliance with the construction contract and Subpart F and (2) RUS Form 281, Tabulation of Materials Furnished by Borrowers, if any, for appropriate costs.

[59 FR 43718, Aug. 25, 1994]

APPENDIX E TO PART 1753—DOCUMENTS REQUIRED TO CLOSEOUT FORCE ACCOUNT OUTSIDE PLANT CONSTRUCTION

Item No.	RUS form No.	Description on title of document	No. of copies required and distribution of documents		
			Total No.	Owner	RUS
a.	817, 817a, 817b	Final inventory force account construciton and certificate of engineer	2	1	1
b	213	Certificate, "Buy American" (as applicable-one from each supplier)	1	1	0
c		Detail maps	1	1	0
d		Key map if applicable	1	1	0
e		Staking sheets	1	1	0
f		Tabulation of staking sheets	1	1	0
g		Treated forest products inspection reports, if applicable	1	1	0

[59 FR 43721, Aug. 25, 1994]

APPENDIX F TO PART 1753—DOCUMENTS REQUIRED TO CLOSEOUT EQUIPMENT CONTRACTS

Form furnished by RUS	Description	No. of copies		Prepared by				Distribution		
		Form 397	Form 398	Form 397		Form 398		Borrower	Contractor	RUS
				Contractor	Engineer	Contractor	Engineer			
238	Construction or Equipment Contract Amendment (If required, submit to RUS for approval before other closeout documents).	3	3	.....	x	.....	x	.....	.....	3
396	Certificate of Completion-Special Equipment Contract (Including Installation).	3	.....	.....	x	.....	x	1	1	1
396a	Certificate of Completion-Special Equipment Contract (Not Including Installation).	.....	3	.....	x	.....	x	1	1	1
744	Certificate of Contractor and Indemnity Agreement	2	.....	x	.....	.....	.....	1	.....	1
213	Certificate (Buy American)	2	2	x	.....	x	.....	1	.....	1
	Report in writing, including all measurements and other information required under Part II of the applicable specifications.	2	2	x	.....	.....	x	1	.....	1
	Set of maintenance recommendations for all equipment furnished under the contract.	1	1	x	.....	x	.....	1	.....	.....

[59 FR 43718, Aug. 25, 1994]

PART 1755—TELECOMMUNICATIONS STANDARDS AND SPECIFICATIONS FOR MATERIALS, EQUIPMENT AND CONSTRUCTION

Sec.
1755.1—1755.2 [Reserved]
1755.3 Field trials.
1755.4—1755.92 [Reserved]
1755.93 List of standard forms of telecommunications contracts.
1755.94—1755.96 [Reserved]
1755.97 Incorporation by reference of telephone standards and specifications.
1755.98 List of telephone standards and specifications included in other 7 CFR parts.
1755.99—1755.199 [Reserved]
1755.200 RUS standard for splicing copper and fiber optic cables.
1755.201—1755.216 [Reserved]
1755.217 Postloan engineering services contract, RUS Form 217.
1755.218—1755.369 [Reserved]
1755.370 RUS specification for seven wire galvanized steel strand.
1755.371—1755.389 [Reserved]
1755.390 RUS specifications for filled telephone cables.
1755.391—1755.396 [Reserved]
1755.397 RUS performance specification for line concentrators.
1755.398—1755.399 [Reserved]
1755.400 RUS standard for acceptance tests and measurements of telecommunications plant.
1755.401 Scope.
1755.402 Ground resistance measurements.
1755.403 Copper cable telecommunications plant measurements.
1755.404 Fiber optic cable telecommunications plant measurements.
1755.405 Voiceband data transmission measurements.
1755.406 Shield or armor ground resistance measurements.
1755.407 Data formats.
1755.408—1755.521 [Reserved]
1755.522 RUS general specification for digital, stored program controlled central office equipment.
1755.523—1755.524 [Reserved]
1755.525 Form 525, central office equipment contract (including installation).
1755.526—1755.699 [Reserved]
1755.700 RUS specification for aerial service wires.
1755.701 Scope.
1755.702 Copper coated steel reinforced (CCSR) aerial service wire.
1755.703 Nonmetallic reinforced (NMR) aerial service wire.
1755.704 Requirements applicable to both CCSR and NMR aerial service wires.
1755.705—1755.859 [Reserved]
1755.860 RUS specification for filled buried wires.
1755.861—1755.869 [Reserved]
1755.870 RUS specification for terminating cables.
1755.871—1755.889 [Reserved]
1755.890 RUS specification for filled telephone cables with expanded insulation.
1755.900 RUS specification for filled fiber optic cables.
1755.910 RUS specification for outside plant housings and serving area interface systems.

AUTHORITY: 7 U.S.C. 901 *et seq.*, 1921 *et seq.*, 6941 *et seq.*

EDITORIAL NOTE: Nomenclature changes to part 1755 appear at 55 FR 39397, Sept. 27, 1990.

§§ 1755.1—1755.2 [Reserved]

§ 1755.3 Field trials.

(a) Except as covered in Bulletin 345–3, no loan funds shall be advanced for any product if any item to be included in the project is not included in the ''List of Materials Acceptable for Use on Telephone Systems of RUS Borrowers,'' RUS Bulletin 344–2. When new items of materials or equipment are considered for acceptance by RUS or when a previously accepted item has been subjected to such major modifications that its suitability cannot be determined based on laboratory data and/or field experience, a field trial shall be required if RUS so determines. This field trial consists of limited field installations of the materials or equipment in closely monitored situations designed to determine, to RUS's satisfaction, their operational effectiveness under actual field conditions. Field trials are to be used only as a means for determining, to RUS's satisfaction, the operational effectiveness of a new or revised product under actual field conditions. Both the manufacturer and borrower are responsible for assuring that the field trial is carried out and that the required information on the product's performance is received by RUS in a timely manner. The use of materials or equipment derived from new inventions or concepts untried within the telephone industry is defined as ''an experiment'' and shall be handled as a special case using procedures considered appropriate by RUS to meet the individual experiment.

(b) To qualify for a field trial, the new and improved materials and equipment must appear to RUS to offer one or more of the following benefits:

(1) Improved performance.

(2) Decreased cost.

(3) Broader application.

(c) The item of material or equipment subject to field trial may be only part of the total amount of materials or equipment included in a bid or it may be the key component of the facility or system provided; therefore, RUS shall have authority to require that a satisfactory plan be provided to maintain or restore service in the event that the materials and equipment fail to meet established performance requirements. RUS shall limit the quantity of new materials and equipment installed on any field trial and shall also limit the number of field trials for a given product to what RUS considers reasonable to provide the necessary information.

(d) A borrower may participate in a field trial only if, in RUS's opinion, the borrower possesses:

(1) Adequate financial resources so that no delay in the project will result from lack of funds.

(2) The financial stability to overcome difficulties which may result from an unsuccessful field trial. The borrower must be able to restore and maintain service until the manufacturer meets its financial obligations with respect to the field trial.

(3) Qualified personnel to enable it to discharge its responsibilities.

(4) A record satisfactory to RUS for maintaining equipment and plant facilities and for providing RUS with information when requested.

(5) Willingness to participate in the field trial and awareness of the effort and responsibility this entails.

(e) The test site for the field trial shall be, in RUS's opinion, readily accessible and provide the conditions, such as temperature extremes, high probability of lightning damage, etc., for which the product is being evaluated. The material or equipment involved shall be covered by an RUS specification or a suitable standard acceptable to RUS. The supplier is required to submit test data to show conformance with the applicable specification or standard. Further testing shall be performed if required by RUS personnel.

(f) A field trial shall normally continue for a minimum of six months, or for a longer period of time determined by RUS to be required to obtain conclusive data that the item either fulfills all requirements or is unacceptable. Either the borrower or supplier may terminate a field trial at any time, in accordance with their contractual agreement. Such termination, if prior to the time required by RUS, shall constitute withdrawal of the product from consideration by RUS. RUS has authority to terminate field trials based on its determination that the equipment is not performing satisfactorily and that this lack of performance may, in RUS's opinion, cause service degradation or hazards to life or property.

(g) Field trials shall be conducted in accordance with the instructions set forth in this regulation and the agreement relating to the specific application. Both the supplier and the borrower shall agree, and obtain RUS approval before the start of the trial, on the following:

(1) The specific purpose of the field trial;

(2) Ownership of items during trial;

(3) Starting date and duration;

(4) Responsibility for costs and removal of items in the event of noncompliance with the specification or purpose intended and arrangements for service continuity or restoration;

(5) Responsibility for testing, test equipment and normal operation and maintenance during the trial period;

(6) Availability of test equipment on site during the trial period; and

(7) Responsibility for spare parts and components consumed during the trial period.

(h) Both the supplier and the borrower shall keep RUS informed of the status of a field trial. These reports shall not be limited to details of problems of failures encountered during installation and subsequent operation but shall include information on progress of the field trial. If these reports are not received in accordance with the requirements of the RUS

Form 399b, RUS shall have the authority to deny or suspend loan funds related to these products until the delinquent reports are received.

(i) Before a borrower purchases materials or equipment that require a field trial, prior approval must be obtained from RUS and RUS Form 399b, RUS Telecommunications Equipment Field Trial (available from the Director, Administrative Services Division, Rural Utilities Service, Room 0175, South Building, U.S. Department of Agriculture, Washington, DC 20250) will be completed by RUS and must be signed by both the borrower and supplier as an indication that they understand their responsibilities in the field trial. Assurance must also be obtained from RUS that the ''particular item'' that is the subject of the field test is eligible for a field trial. To obtain this assurance, any proposal for use of an item on a field trial basis shall be forwarded to the Chief, Area Engineering Branch, for review and approval.

(j) Procedures for establishing field trials for the various categories of equipment after RUS has approved the 399b:

(1) *Electronic transmission equipment.* The procedure set forth in Bulletin 385–2 ''Purchasing and Installing Special Electronic Equipment'' shall be followed except that the Special Equipment Contract (Including Installation), RUS Form 397, shall be used in all purchases of electronic equipment for field trials. In addition, the borrower and supplier shall execute three copies of a ''Supplemental Agreement to Equipment Contract for Field Trial,'' RUS Form 399, or a ''Supplemental Agreement to Equipment Contract for Field Trial (Secondary—Delivery, Installation, Operation)'', RUS Form 399a, as well as three copies of the RUS Form 399b, ''RUS Telecommunications Equipment Field Trial'', and forward them, together with three copies of the executed contract and specifications, to the Chief, Area Engineering Branch. A limited number of copies of RUS Forms 399, 399a, and 399b are available from RUS upon request from the Director, Administrative Services Division, Rural Utilities Service, Room 0175, South Building, U.S. Department of Agriculture, Washington, DC 20250. Additional copies may be reproduced by the user as needed. This category includes:

(i) Voice frequency repeaters;

(ii) Trunk carriers;

(iii) Subscriber carrier;

(iv) Point-to-point radio (Microwave);

(v) Coaxial cable system electronics;

(vi) Fiber optic cable system electronics;

(vii) Multiplex equipment;

(viii) Mobile and fixed radiotelephone; and

(ix) Other items of electronic equipment associated with transmission.

(2) *Central office equipment.* The procedure set forth in Bulletin 384–1 ''Purchasing and Installing Central Office Equipment'' shall be followed except that ''The Central Office Equipment Contract (Including Installation)'', RUS Form 525, shall be used to purchase switching equipment for field trials. In addition, the borrower and supplier shall execute three copies of a ''Supplemental Agreement to Equipment Contract for Field Trial,'' RUS Form 399, or a ''Supplemental Agreement to Equipment Contract for Field Trial (Secondary—Delivery, Installation, Operation)'', RUS Form 399a, as the case may be, as well as three copies of the RUS Form 399b, ''RUS Telecommunications Equipment Field Trial'', and forward them, together with three copies of the executed contract and specification to the Chief, Area Engineering Branch. This category includes:

(i) Central office dial equipment;

(ii) Direct distance dialing equipment;

(iii) Automatic number identification equipment;

(iv) Line concentrators;

(v) Remote switching equipment; and

(vi) All other items of equipment associated with switching equipment, such as loop extenders.

(3) Protection equipment and materials, outside plant equipment and materials, and all other equipment and materials, which includes all items not covered in paragraph (j) (1) or (2) of this section, shall be handled as described in Bulletin 344–1 ''Methods of Purchasing Materials and Equipment

for Use on Systems of Telephone Borrowers'' except that the borrower's purchase order form is to be used for purchasing materials and equipment in these categories. In addition, the borrower and supplier shall execute three copies of the ''Supplemental Agreement to Equipment Contract for Field Trial,'' RUS Form 399, or a ''Supplemental Agreement to Equipment Contract for Field Trial (Secondary—Delivery, Installation, Operation)'', RUS Form 399a, as the case may be, as well as three copies of the RUS Form 399b, ''RUS Telecommunications Field Trial'', and forward them, together with three copies of the purchase order to the Chief, Area Engineering Branch.

(k) For all items except Electronic Central Office Equipment, suppliers and manufacturers must furnish warranties or guarantees satisfactory to RUS against the failure of the material and equipment used in the field trial. Terms of this warranty must not be less than the provisions of the standard warranty included in the ''Telephone System Construction Contract'', RUS Form 515, or the warranty provided for similar materials and equipment included in the ''List of Materials Acceptable for Use on Telephone Systems of RUS Borrowers'', RUS Bulletin 344–2. In lieu of a warranty, materials and equipment are sometimes furnished to RUS borrowers on a reduced or no cost basis. Terms of such arrangements are subject to RUS approval and should be fully covered in field trial proposals forwarded by borrowers to the Chief, Area Engineering Branch for review and approval. For the purchase of electronic central office equipment, suppliers and manufacturers are to provide warranties as provided in the applicable RUS contract form: RUS Form 397 for electronic equipment and RUS Form 525 for central office equipment. Forms 399 and 399a, which apply to field trials of these devices, specify that the term of the warranty does not begin until the satisfactory conclusion of the field trial.

[49 FR 28394, July 12, 1984. Redesignated at 55 FR 39397, Sept. 27, 1990]

§§ 1755.4—1755.92 [Reserved]

§ 1755.93 List of standard forms of telecommunications contracts.

Following is a list of the current standard forms of contracts that RUS prepared for use by telephone borrowers when procuring engineering and architectural services, purchasing telephone materials and equipment, and constructing telephone facilities with RUS loan funds. Copies of the contract forms are available from the sources indicated in the listing. A notice of any change in these contract forms will be published in the FEDERAL REGISTER. The terms ''RUS form'', ''RUS standard form'', ''RUS specification'', and ''RUS bulletin'' have the same meanings as the terms ''REA form'', ''REA standard form'', ''REA specification'', and ''REA bulletin'', respectively, unless otherwise indicated.

RUS Form No.	Issue date	Title	Purpose	Source of copies
165	9–69	Architectural Services Contract—Telephone.	Used to engage the services of an architect.	RUS.[1]
168b	3–62	Contractor's Bond	Used in RUS Form 515 when the contract exceeds $100,000.	Copy in the Form 515 Contract.
168c	4–79	Contractor's Bond	Used when the contractor's surety has accepted a Small Business Administration guarantee and the contract is for $1 million or less.	RUS.[1]
217	7–81	Postloan Engineering Service Contract, Telephone System and Construction.	Used to engage the services of a consulting engineer to perform the postloan engineering services.	RUS.[1]
238	4–72	Construction or Equipment Contract Amendment.	Amending the Building Contract RUS Form 257; Special Equipment Contracts, RUS Forms 397 and 398; Telephone Equipment Contract (Installation Only), RUS Form 400; Central Office Equipment Contracts, RUS Forms 525 and 545.	RUS.[1]

RUS Form No.	Issue date	Title	Purpose	Source of copies
242	11–58	Assignment of Engineering Service Contract.	Used to transfer the responsibilities of completing the performance of the engineering service contract to another company.	RUS.[1]
245	11–75	Engineering Service Contract, Special Services—Telephone.	Used to engage a consulting engineer to perform special services.	RUS.[1]
257	3–73	Contract to Construct Buildings	Building construction	Supt. of Doc., GPO, Wash., DC 20402.[2]
257a	10–69	Contractor's Bond	Used in RUS Form 257	Copy in the Form 257 Contract.
270	7–70	Equal Opportunity Addendum	Addendum to Construction and Equipment Contracts not having current equal opportunity provisions.	RUS.[1]
282	11–53	Subcontract	Subcontracting a portion of construction under a construction contract requires approval of the borrower, surety and RUS prior to subcontracting.	RUS.[1]
307	4–60	Bid Bond	Bid proposals on RUS Forms 257, 515, and 525 require either a bid bond or a certified check in an amount equal to ten percent of the maximum bid price.	Copies in each of the contracts.
397	12–67	Special Equipment Contract (Including Installation).	Purchase and installation of voice frequency repeaters, trunk carrier, subscriber carrier, microwave, mobile radio, line concentrators, and other items of electronic equipment associated with transmission.	RUS.[1]
397f	2–63	Contractor's Bond (Special Telephone Equipment).	Used in RUS Form 397 when the contract exceeds $100,000.	Copy in the Form 397 Contract.
No form number.	7–78	Addendum No. 1 to RUS Form 397, Special Equipment Contract (Including Installation).	Incorporates the liquidated damages provision into the 397 contract.	RUS.[1]
398	11–62	Special Equipment Contract (Not Incl. Installation).	Purchase and deliver voice frequency repeaters, trunk carrier, subscriber carrier, microwave, mobile radio, line concentrators, and other items of electronic equipment associated with transmission.	RUS.[1]
399	8–82	Supplemental Agreement to Equipment Contract for Field Trial.	Used in any contract that contains material or equipment that requires a field trial and has primary status.	RUS.[1]
399a	8–82	Supplemental Agreement to Equipment Contract for Field Trial (Secondary—Delivery, Installation, Operation).	Used in any contract that contains material or equipment that requires a field trial and is the secondary field trial category.	RUS.[1]
400	10–65	Telephone Equipment Contract (Installation Only).	Used where the contract will cover only the installation of equipment.	RUS.[1]
400a	10–65	Contractor's Bond (Telephone Equipment Contract—Installation Only).	Used in RUS Form 400 when the contract exceeds $100,000.	Copy in the Form 400 Contract.
515	1–90	Telephone System Construction Contract (Labor and Materials).	Telephone outside plant construction, including direct buried plant, conduit and manholes, underground cable, pole lines, aerial cable, service entrances and station protector.	Supt. of Doc., GPO, Wash DC 20402.[2]
525	7–94	Central Office Equipment Contract (Including Installation).	Purchase and Installation of central office switching equipment.	RUS.[1]
525a	10–62	Contractor's Bond (Central Office Equipment).	Used in RUS Form 525 when the contracts exceed $100,000.	Copy in the Form 525 Contract.
No form number.	8–79	Addendum No. 1 to RUS Form 525, Central Office Equipment Contract (Including Installation).	Incorporates the liquidated damages provision into the 525 contract.	RUS.[1]
526	8–66	Construction Contract Amendment	Amending the Telephone System Construction Contract (Labor and Material), RUS Form 515.	RUS.[1]
545	9–66	Central Office Equipment Contract (Not Including Installation).	Purchase and deliver central office equipment.	RUS.[1]
756	3–63	Telephone Line Extension Construction Contract (Labor and Materials).	Construction of system improvements and line extensions where scope of the project is not known.	RUS.[1]
773	12–90	Miscellaneous Construction Work and Maintenance Service Contract..	Minor construction by contract and maintenance and repair of telephone system facilities..	RUS.[1]

RUS Form No.	Issue date	Title	Purpose	Source of copies
787	8–63	Supplement A to Construction Contract RUS Form 515.	Used in RUS Form 515 when borrower furnishes any material for construction of the project.	RUS.[1]
No form number.	5–94	Addendum No. 2 to RUS Forms 525 and 545 Central Office Equipment Contracts.	Incorporates the Software License Agreement into RUS Forms 525 and 545.	RUS.[1]

[1] A limited number of copies of the publication will be furnished by RUS upon request. As this document is produced by the Federal Government and is, therefore, in the public domain, additional copies may be duplicated locally by any user as desired. Requests for copies should be sent the Director, Administrative Services Division, U.S. Department of Agriculture, Rural Utilities Service, Washington, DC 20250. The telephone number of the RUS Publication Office is (202) 720–8674.

[2] This contract form is for sale by the Superintendent of Documents, Government Printing Office, Washington, DC 20402. RUS Form 33, Order Blank for RUS Contract Forms from the Government Printing Office should be used to order the publication. Follow the procedure under ([1]) to obtain copies of Form 33 from RUS.

[53 FR 15546, May 2, 1988; as amended at 55 FR 2510, Jan. 25, 1990. Redesignated at 55 FR 39397, Sept. 27, 1990, as amended at 56 FR 1484, Jan. 15, 1991; 59 FR 17681, Apr. 14, 1994; 59 FR 31126, June 17, 1994; 59 FR 66440, Dec. 27, 1994]

§§ 1755.94—1755.96 [Reserved]

§ 1755.97 Incorporation by reference of telephone standards and specifications.

The following telephone Bulletins have been approved for incorporation by reference by the Director of the Office of the Federal Register on December 30, 1983. Bulletin 345–150 (Form 515a) containing the specifications and drawings for construction of buried cables and wires may be purchased from the Superintendent of Documents, U.S. Government Printing Office, Washington, DC 20402. The remaining Bulletins containing construction standards and specifications for materials and equipment may be obtained from the Rural Utilities Service, Administrative Services Division, Room 0175–S, Washington, DC 20250. The bulletins are available for inspection at the Office of the Federal Register, 800 North Capitol Street, NW., suite 700, Washington, DC. These materials are incorporated as they exist on the date of the approval and a notice of any change in these materials will be published in the FEDERAL REGISTER. The terms ''RUS form'', ''RUS standard form'', ''RUS specification'', and ''RUS bulletin'' have the same meanings as the terms ''REA form'', ''REA standard form'', ''REA specification'', and ''REA bulletin'', respectively, unless otherwise indicated.

RUS Bulletin No.	Specification No.	Date last issued	Title of standard or specification
345–22	PE–26	Jan. 1989	RUS specification for voice frequency loading coils.
345–39	.....	Aug. 19, 1985	RUS specification for telephone station protectors.
345–50	PE–60	Sept. 1979	RUS specification for trunk carrier systems.
345–52	PC–5A	Jan. 1980	RUS standard for service entrance and station protector installations.
345–54	PE–52	Dec. 1971	RUS specification for telephone cable splicing connectors.
345–55	PE–61	Dec. 1973	RUS specification for central office loop extenders and loop extender voice frequency repeater combinations.
345–65	PE–65	Mar. 22, 1985	Specification for shield bonding connectors.
345–66	PE–64	Sept. 1979	RUS specification for subscriber carrier systems.
345–69	PE–29	Jan. 1978	RUS specification for two-wire voice frequency repeater equipment.
345–72	PE–74	Oct. 1985	RUS specification for filled splice closures.
345–78	PE–78	Feb. 1980	RUS specification for carbon arrester assemblies for use in protectors.
345–150	Form 515a	July 1989	RUS specifications and drawings for construction of direct buried plant.
345–151	Form 515c	July 1989	RUS specifications and drawings for conduit and manhole construction.
345–152	Form 515d	July 1989	RUS specifications and drawings for underground cable installation.
345–153	Form 515f	July 1989	RUS specifications and drawings for construction of pole line and aerial cables.
345–154	Form 515g	July 1989	RUS specifications and drawings for service entrance and station protection installation.

RUS Bulletin No.	Specification No.	Date last issued	Title of standard or specification
345–180	Form 397a	Jan. 1963	RUS specifications for voice frequency repeaters and voice frequency repeatered trunks.
345–183	Form 397d	June 1970	RUS design specifications for point-to-point microwave radio systems.
345–184	Form 397e	May 1971	RUS design specifications for mobile and fixed dial radio telephone equipment.
1728F–700		9-2-93	RUS Specification for Wood Poles, Stubs and Anchor Logs

[48 FR 57470, Dec. 30, 1983]

EDITORIAL NOTE: For FEDERAL REGISTER citations affecting § 1755.97, see the List of CFR Sections Affected in the Finding Aids section of this volume.

§ 1755.98 List of telephone standards and specifications included in other 7 CFR parts.

The following standards and specifications are included throughout 7 CFR chapter XVII. These standards and specifications are not incorporated by reference elsewhere in the chapter. The terms ''RUS form'', ''RUS standard form'', ''RUS specification'', and ''RUS bulletin'' have the same meanings as the terms ''REA form'', ''REA standard form'', ''REA specification'', and ''REA bulletin'', respectively, unless otherwise indicated.

Section	Issue date	Title
1728.202	9–2–93	RUS Specification for Quality Control and Inspection of Timber Products.
1755.200	1–26–95	RUS Standard for Splicing Copper and Fiber Optic Cables.
1755.370	1–19–90	RUS Specification for Seven Wire Galvanized Steel Strand.
1755.390	6–21–93	RUS Specification for Filled Telephone Cables.
1755.397	3–6–90	RUS Design Specification for Digital Lightwave Transmission Systems, RUS Form 397h.
1755.400 through 1755.407.	6–2–97	RUS Standard for Acceptance Tests and Measurements of Telecommunications Plant.
1755.522	6–28–93	RUS General Specification for Digital, Stored Program Controlled Central Office Equipment.
1755.525	7–18–94	RUS Form 525, Central Office Equipment Contract (Including Installation).
1755.700 through 1755.704.	6–24–96	RUS Specification for Aerial Service Wires.
1755.860	12–20–93	RUS Specification for Filled Buried Wires.
1755.870	7–14–94	RUS Specification for Terminating Cables.
1755.890	6–21–93	RUS Specification for Filled Telephone Cables with Expanded Insulation.
1755.900	8–4–94	RUS Specification for Filled Fiber Optic Cables.
1755.910	11–21–94	RUS Specification for Outside Plant Housings and Serving Area Interface Systems.

[58 FR 41410, Aug. 3, 1993, as amended at 59 FR 53044, Oct. 21, 1994; 59 FR 66440, Dec. 27, 1994; 60 FR 1712, Jan. 5, 1995; 60 FR 5097, Jan. 26, 1995; 61 FR 26074, May 24, 1996; 62 FR 23959, May 2, 1997]

§§ 1755.99—1755.199 [Reserved]

§ 1755.200 RUS standard for splicing copper and fiber optic cables.

(a) *Scope.* (1) This section describes approved methods for splicing plastic insulated copper and fiber optic cables. Typical applications of these methods include aerial, buried, and underground splices.

(2) American National Standard Institute/National Fire Protection Association (ANSI/NFPA) 70, 1993 National Electrical Code (NEC) referenced in this section is incorporated by reference by RUS. This incorporation by reference was approved by the Director of the Federal Register in accordance with 5 U.S.C. 552(a) and 1 CFR part 51. A copy of the ANSI/NFPA 1993 NEC standard is available for inspection during normal business hours at RUS, room 2845, U.S. Department of Agriculture, Washington, DC 20250–1500 or at the Office of the Federal Register,

800 North Capitol Street, NW., suite 700, Washington, DC. Copies are available from NFPA, Batterymarch Park, Quincy, Massachusetts 02269, telephone number 1 (800) 344–3555.

(3) American National Standard Institute/Institute of Electrical and Electronics Engineers, Inc. (ANSI/IEEE), 1993 National Electrical Safety Code (NESC) referenced in this section is incorporated by reference by RUS. This incorporation by reference was approved by the Director of the Federal Register in accordance with 5 U.S.C. 552(a) and 1 CFR part 51. A copy of the ANSI/IEEE 1993 NESC standard is available for inspection during normal business hours at RUS, room 2845, U.S. Department of Agriculture, Washington, DC 20250–1500 or at the Office of the Federal Register, 800 North Capitol Street, NW., suite 700, Washington, DC. Copies are available from IEEE Service Center, 455 Hoes Lane, Piscataway, New Jersey 08854, telephone number 1 (800) 678–4333.

(b) *General.* (1) Only Rural Utilities Service (RUS) accepted filled cable and splicing materials shall be used on outside plant projects financed by RUS.

(2) The installation instructions provided by the manufacturer of splicing materials shall be followed except where those instructions conflict with the procedures specified in this section.

(3) Precautions shall be taken to prevent the ingress of moisture and other contaminants during all phases of the splicing installation. When an uncompleted splice must be left unattended, it shall be sealed to prevent the ingress of moisture and other contaminants.

(4) Minor sheath damage during construction may be repaired if the repair is completed immediately and approved by the borrower's resident project representative. Minor damage is typically repaired by:

(i) Scuffing the cable sheath associated with the damaged area;

(ii) Applying several layers of DR tape over the scuffed and damaged area;

(iii) Applying several layers of plastic tape over the DR tape; and

(iv) If damage is severe enough to rupture the cable shield, a splice closure shall be installed.

(5) All splice cases installed on RUS toll trunk and feeder cables shall be filled, whether aerial, buried, or underground.

(c) *Splicing considerations for copper cables*—(1) *Preconstruction testing.* It is desirable that each reel of cable be tested for grounds, opens, shorts, crosses, and shield continuity before the cable is installed. However, manufacturer supplied test results are acceptable. All cable pairs shall be free from electrical defects.

(2) *Handling precautions.* The cable manufacturer's instructions concerning pulling tension and bending radius shall be observed. Unless the cable manufacturer's recommendation is more stringent, the minimum bending radius shall be 10 times the cable diameter for copper cables and 20 times the cable diameter for fiber optic cables.

(3) *Cable sheath removal.* (i) The length of cable sheath to be removed shall be governed by the type of splicing hardware used. Follow the splice case manufacturer's recommendations. For pedestals or large pair count splice housings, consider removing enough cable sheath to allow the conductors to extend to the top of the pedestal and then to hang downward to approximately 15 centimeters (cm) (6 inches (in.)) above the baseplate.

(ii) Caution shall be exercised to avoid damaging the conductor insulation when cutting through the cable shield and removing the shield. Sharp edges and burrs shall be removed from the cut end of the shield.

(4) *Shield bonding and grounding.* For personnel safety, the shields of the cables to be spliced shall be bonded together and grounded before splicing activities are started. (See paragraphs (g)(2), and (g)(5)(i) through (g)(5)(iii) of this section for final bonding and grounding provisions.)

(5) *Binder group identification.* (i) Color coded plastic tie wraps shall be placed loosely around each binder group of cables before splicing operations are attempted. The tie wraps shall be installed as near the cable sheath as practicable and shall conform to the same color designations as

the binder ribbons. Twisted wire pigtails shall not be used to identify binder groups due to potential transmission degradation.

(ii) The standard insulation color code used to identify individual cable pairs within 25-pair binder groups shall be as shown in Table 1:

TABLE 1.—CABLE PAIR IDENTIFICATION WITHIN BINDER GROUPS

Pair No.	Color	
	Tip	Ring
1	White	Blue.
2	White	Orange.
3	White	Green.
4	White	Brown.
5	White	Slate.
6	Red	Blue.
7	Red	Orange.
8	Red	Green.
9	Red	Brown.
10	Red	Slate.
11	Black	Blue.
12	Black	Orange.
13	Black	Green.
14	Black	Brown.
15	Black	Slate.
16	Yellow	Blue.
17	Yellow	Orange.
18	Yellow	Green.
19	Yellow	Brown.
20	Yellow	Slate.
21	Violet	Blue.
22	Violet	Orange.
23	Violet	Green.
24	Violet	Brown.
25	Violet	Slate.

(iii) The standard binder ribbon color code used to designate 25-pair binder groups within 600-pair super units shall be as shown in Table 2:

TABLE 2.—CABLE BINDER GROUP IDENTIFICATION

Group No.	Color of bindings	Group pair count
1	White-Blue	1–25
2	White-Orange	26–50
3	White-Green	51–75
4	White-Brown	76–100
5	White-Slate	101–125
6	Red-Blue	126–150
7	Red-Orange	151–175
8	Red-Green	176–200
9	Red-Brown	201–225
10	Red-Slate	226–250
11	Black-Blue	251–275
12	Black-Orange	276–300
13	Black-Green	301–325
14	Black-Brown	326–350
15	Black-Slate	351–375
16	Yellow-Blue	376–400
17	Yellow-Orange	401–425
18	Yellow-Green	426–450
19	Yellow-Brown	451–475

TABLE 2.—CABLE BINDER GROUP IDENTIFICATION—Continued

Group No.	Color of bindings	Group pair count
20	Yellow-Slate	476–500
21	Violet-Blue	501–525
22	Violet-Orange	526–550
23	Violet-Green	551–575
24	Violet-Brown	576–600

(iv) Super-unit binder groups shall be identified in accordance with Table 3:

TABLE 3.—SUPER-UNIT BINDER COLORS

Pair numbers	Binder color
1–600	White.
601–1200	Red.
1201–1800	Black.
1801–2400	Yellow.
2401–3000	Violet.
3001–3600	Blue.
3601–4200	Orange.
4201–4800	Green.
4801–5400	Brown.
5401–6000	Slate.

(v) Service pairs in screened cables shall be identified in accordance with Table 4:

TABLE 4.—SCREENED CABLE SERVICE PAIR IDENTIFICATION

Service pair No.	Color	
	Tip	Ring
1	White	Red.
2	White	Black.
3	White	Yellow.
4	White	Violet.
	Red	Black.
6	Red	Yellow.
7	Red	Violet.
8	Black	Yellow.
9	Black	Violet.

(6) *Cleaning conductors.* It is not necessary to remove the filling compound from cable conductors before splicing. However, it is permissible to wipe individual conductors with clean paper towels or clean cloth rags. No cleaning chemicals, etc., shall be used. Caution shall be exercised to maintain individual cable pair and binder group identity. Binder group identity shall be maintained by using color coded plastic tie wraps. Individual pair identification shall be maintained by carefully twisting together the two conductors of each pair.

(7) *Expanded plastic insulated conductor (PIC) precautions.* Solid PIC and expanded (foam or foam skin) PIC are

spliced in the same manner, using the same tools and materials and, in general, should be treated the same. However, the insulation on expanded PIC is much more fragile than solid PIC. Twisting or forming expanded PIC into extremely compact splice bundles and applying excessive amounts of tension when tightening tie wraps causes shiners and, thus shall be avoided.

(8) *Splice connectors.* (i) Only RUS accepted filled splice connectors shall be used on outside plant projects financed by RUS.

(ii) Specialized connectors are available for splicing operations such as butt splices, in line splices, bridge taps, clearing and capping, and multiple pair splicing operations. The splice connector manufacturer's recommendations shall be followed concerning connector selection and use.

(iii) Caution shall be exercised to maintain conductor and pair association both during and after splicing operations.

(iv) Splicing operations that involve pairs containing working services shall utilize splice connectors that permit splicing without the interruption of service.

(9) *Piecing out conductors.* Conductors may be pieced-out to provide additional slack or to repair damaged conductors. However, the conductors shall be pieced-out with conductors having the same gauge and type and color of insulation. The conductors used for piecing-out shall be from cables having RUS acceptance.

(10) *Splice organization.* Spliced pair bundles shall be arranged in firm layups with minimum conductor tension in accordance with the manufacturer's instructions.

(11) *Binder tape.* Perforated nonhygroscopic and nonwicking binder tape should be applied to splices housed in filled splice cases. The binder tape allows the flow of filling compound while holding the splice bundles near the center of the splice case to allow adequate coverage of filling compound.

(12) *Cable tags.* Cables shall be identified by a tag indicating the cable manufacturer's name, cable size, date of placement, and generic route information. Information susceptible to changes caused by future cable throws and rearrangements should not be included. Tags on load coil stubs shall include the serial number of the coil case, the manufacturer's name, and the inductance value.

(13) *Screened cable.* Screened PIC cable is spliced in the same manner as nonscreened PIC cable. However, special considerations are necessary due to differences in the cable design. The transmit and receive bundles of the cable shall be separated and one of the bundles shall be wrapped with shielding material in accordance with the cable manufacturer's recommendations. When acceptable to the cable manufacturer, it is permissible to use either the scrap screening tape removed from the cable during the sheath opening process provided the screening tape is edge coated or new pressure sensitive aluminum foil tape over polyethylene tape.

(14) *Service wire connections.* (i) Buried service wires may be spliced directly to cable conductors inside pedestals using the same techniques required for branch cables. Buried service wires may also be terminated on terminal blocks inside pedestals in areas where high service order activity or fixed count cable administration policies require terminal blocks. However, only RUS accepted terminal blocks equipped with grease or gel filled terminations to provide moisture and corrosion resistance shall be used.

(ii) Only filled terminal blocks having RUS acceptance shall be used on aerial service wire connections.

(15) *Copper cable testing.* Copper cable testing shall be performed in accordance with RUS Bulletin 345–63, ''RUS Standard for Acceptance Tests and Measurements of Telephone Plant,'' PC–4, (Incorporated by reference at § 1755.97).

(16) *Cable acceptance.* Installed cable shall be tested and pass the inventory and acceptance testing specified in the Telephone System Construction Contract (Labor and Materials), RUS Form 515. The tests and inspections shall be witnessed by the borrower's resident project representative. All conductors shall be free from grounds, shorts, crosses, splits, and opens.

(d) *Splice arrangements for copper cables*—(1) *Service distribution closures.* (i)

Ready access closures permit cable splicing activities and the installation of filled terminal blocks for service wire connections in the same closure. Ready access designs shall allow service technicians direct access to the cable core as well as the terminal block.

(ii) Fixed count terminals shall restrict service technician access to the cable core. Predetermined cable pairs shall be spliced to the terminal leads or stub cable in advance of service assignments.

(2) *Aerial splices.* Aerial splice cases accommodate straight splices, branch splices, load coils, and service distribution terminals. Aerial splicing arrangements having more than 4 cables spliced in the same splice case are not recommended. Stub cabling to a second splice case to avoid a congested splice is acceptable.

(3) *Buried splices.* (i) Direct buried splice cases accommodate straight splices, branch splices, and load coils. Direct buried splices shall be filled and shall be used only when above ground splicing in pedestals is not practicable.

(ii) A treated plank or equivalent shall be placed 15 cm (6 in.) above the buried splice case to prevent damage to the splice case from future digging. Where a firm base for burying a splice cannot be obtained, a treated plank or equivalent shall be placed beneath the splice case.

(iii) Each buried splice shall be identified for future locating. One method of marking the splice point is the use of a warning sign. Another method is the burying of an electronic locating device.

(4) *BD-type pedestals.* (i) BD-type pedestals are housings primarily intended to house, organize, and protect cable terminations incorporating splice connectors, ground lugs, and load coils. Activities typically performed in pedestals are cable splicing, shield bonding and grounding, loading, and connection of subscriber service drops.

(ii) The recommended splice capacities for BD-type pedestals are shown in Table 5. However, larger size pedestals are permissible if service requirements dictate their usefulness. Table 5 is as follows:

TABLE 5.—SPLICE CAPACITIES FOR BD-TYPE PEDESTALS

Pedestal type	Maximum straight splice pair capacity using single pair connectors or multiple pair splice modules	Maximum load splice pair capacity using single pair connectors or multiple pair splice modules (see note 1)
BD3, BD3A	100 Pair	50 Pair.
BD4, BD4A	200 Pair	100 Pair.
BD5, BD5A	600 Pair	300 Pair.
BD7	1200 Pair	600 Pair.
BD14, BD14A	100 Pair	50 Pair.
BD15, BD15A	400 Pair	200 Pair.
BD16, BD16A	600 Pair	300 Pair.

Note 1: This table refers to load coil cases that are to be direct buried with stub cables extending into the pedestal for splicing. Requirements involving individual coil arrangements inside the pedestal should be engineered on a case-by-case basis.

(iii) Special distribution pedestals having a divider plate for mounting filled terminal blocks are available. Distribution pedestals are also equipped with service wire channels for installation of buried service wires without disturbing the cabling and gravel inside the base of the pedestal. Distribution pedestals are recommended in locations where the connection of service wires is required.

(5) *Large pair count splice housings.* Large pair count splice housings are recommended for areas not suitable for man- holes. The recommended capacities are shown in Table 6:

TABLE 6.—SPLICE CAPACITIES FOR LARGE COUNT HOUSINGS

Housing type	Maximum straight splice pair capacity using single pair connectors or multiple pair splice modules	Maximum load splice pair capacity using single pair connectors or multiple pair splice modules (see note 1)
BD 6000	6,000 Pair	3,000 Pair.
BD 8000	8,000 Pair	4,000 Pair.
BD 10000	10,000 Pair	5,000 Pair.

(6) *Pedestal restricted access inserts.* Restricted access inserts may be used to protect splices susceptible to unnecessary handling where subsequent work activities are required or expected to occur after splices have been completed. Restricted access inserts also provide moisture protection in areas susceptible to temporary flooding. A typical restricted access insert is shown in Figure 1:

FIGURE 1

PEDESTAL RESTRICTED ACCESS INSERT

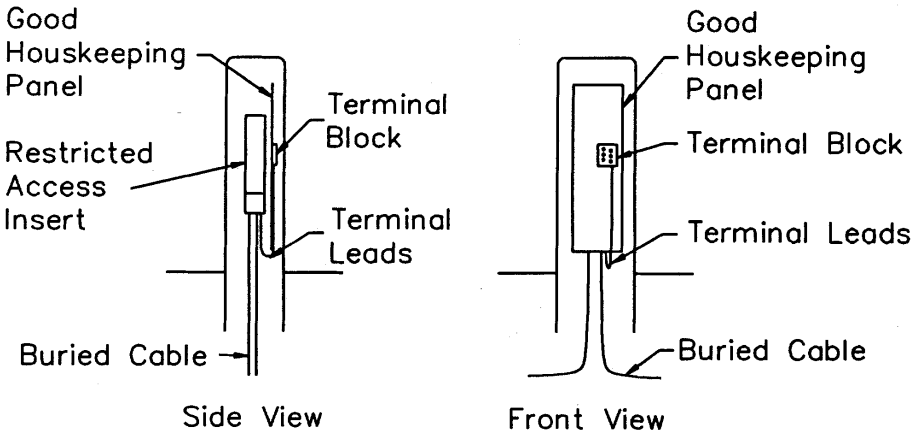

(7) *Serving Area Interface (SAI) Systems.* SAI systems provide the cross-connect point between feeder and distribution cables. Connection of feeder to distribution pairs is accomplished by placing jumpers between connecting blocks. Only RUS accepted connecting blocks having grease or gel filled terminations to provide moisture and corrosion resistance shall be used.

(8) *Buried cable splicing arrangements.* Typical buried cable splicing arrangements are illustrated in Figures 2 through 5:

FIGURE 2
SERVICE WIRE CONNECTION TO BURIED CABLE

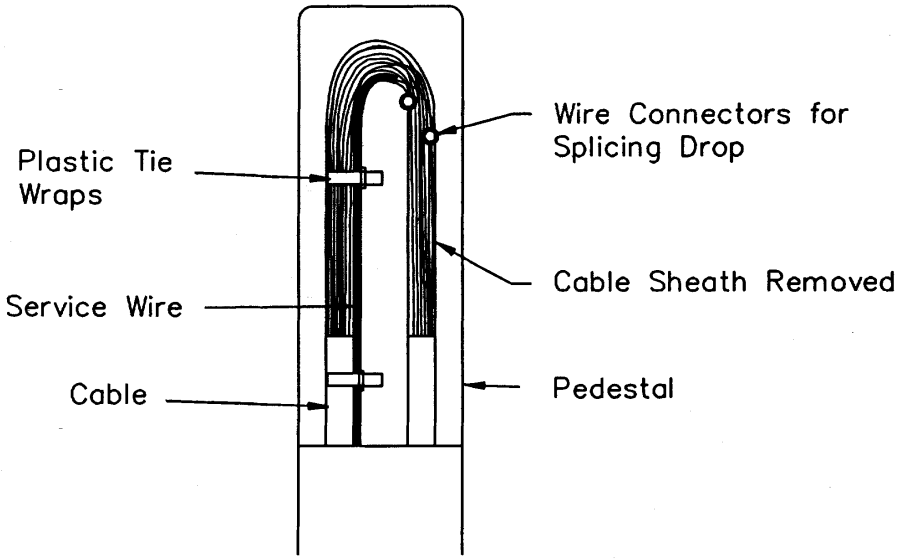

Note: See Figures 13 through 16 for cable tags, tie wraps, and bonding and grounding details.

FIGURE 3

TYPICAL SPLICE USING SINGLE PAIR CONNECTORS

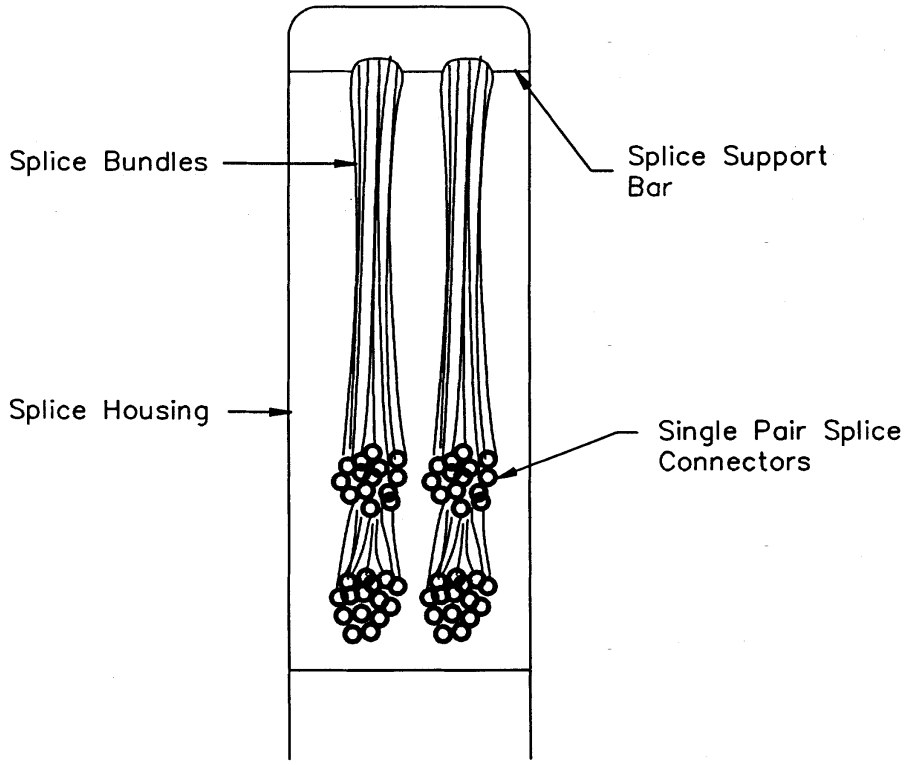

Note: Cable tags, bonding and grounding details, and plastic tie wraps have been omitted for clarity. See Figures 13 through 16 for cable tags, tie wraps, and bonding and grounding details.

FIGURE 4

LARGE SPLICE USING MULTIPLE PAIR CONNECTORS

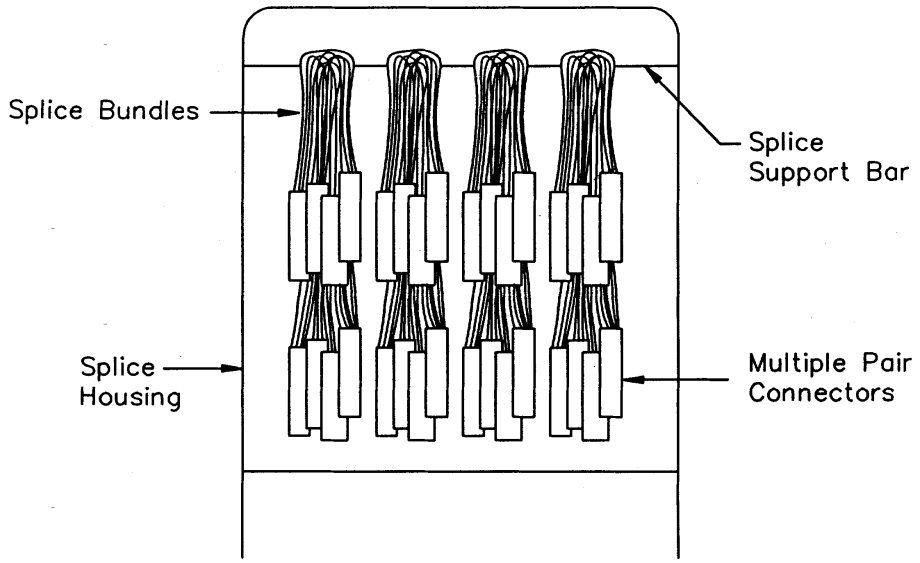

Note: Cable tags, bonding and grounding details, and plastic tie wraps have been omitted for clarity. See Figures 13 through 16 for cable tags, tie wraps, and bonding and grounding details.

FIGURE 5

LARGE SPLICE USING MULTIPLE PAIR CONNECTORS MOUNTED ON ORGANIZER RACKS

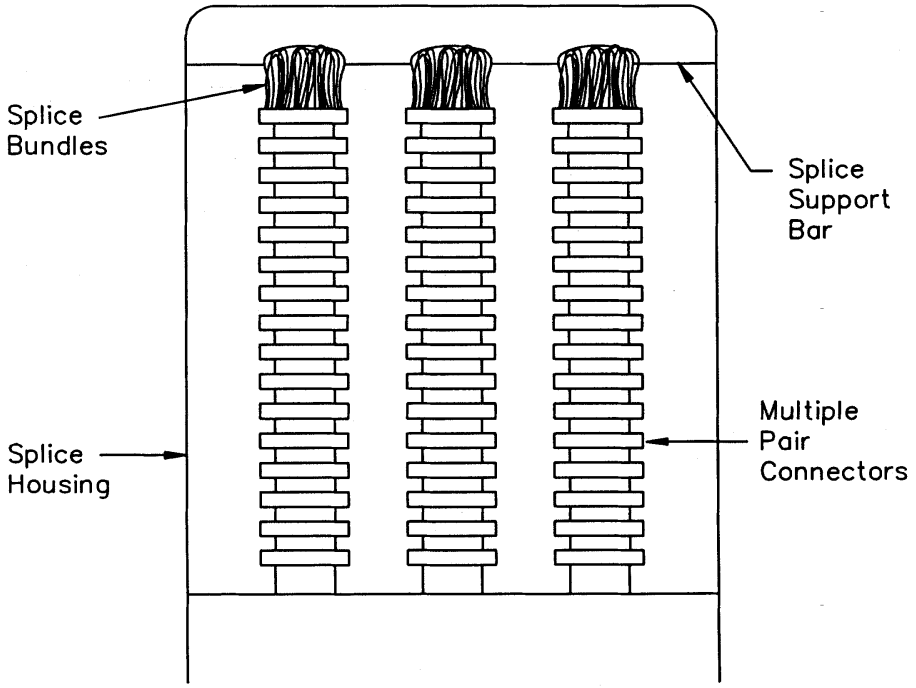

Note: Cable tags, bonding and grounding details, and plastic tie wraps have been omitted for clarity. See Figures 13 through 16 for cable tags, tie wraps, and bonding and and grounding details.

(9) *Underground splices (manholes).* Underground splice cases accommodate straight splices, branch splices, and load coils. Underground splices shall be filled.

(10) *Central office tip cable splices.* (i) Filled cable or filled splices are not recommended for use inside central offices, except in cable vault locations. Outside plant cable sheath and cable filling compound are susceptible to fire and will support combustion. Fire, smoke, and gases generated by these materials during burning are detrimental to telephone switching equipment.

(ii) Tip cables should be spliced in a cable vault. However, as a last resort, tip cables may be spliced inside a central office if flame retardant splice cases or a noncombustible central office splice housing is used to contain the splice.

(iii) Splices inside the central office shall be made as close as practical to the point where the outside plant cables enter the building. Except in cable

vault locations, outside plant cables within the central office shall be wrapped with fireproof tape or enclosed in noncombustible conduit.

(e) *Splicing considerations for fiber optic cables*—(1) *Connection characteristics.* Splicing efficiency between optical fibers is a function of light loss across the fiber junctions measured in decibels (dB). A loss of 0.2 dB in a splice corresponds to a light transmission efficiency of approximately 95.5 percent.

(2) *Fiber core alignment.* Fiber splicing techniques shall be conducted in such a manner that the cores of the fibers will be aligned as perfectly as possible to allow maximum light transmission from one fiber to the next. Without proper alignment, light will leave the fiber core and travel through the fiber cladding. Light outside the fiber core is not a usable light signal. Core misalignment is illustrated in Figure 6:

FIGURE 6
CORE MISALIGNMENT

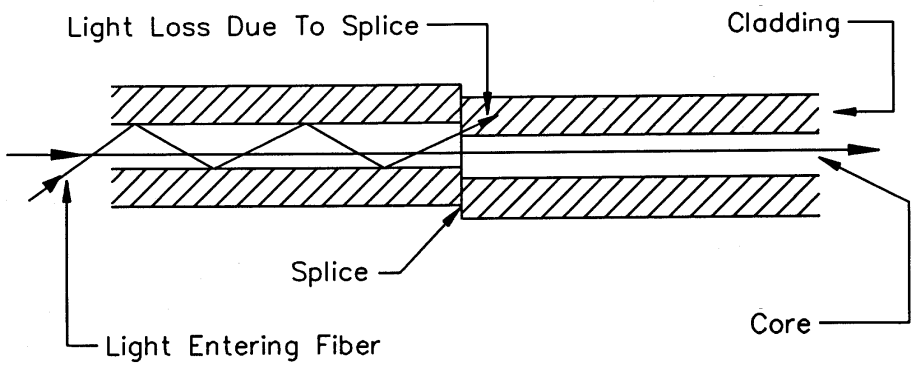

(3) *Splice loss.* (i) Splice loss can also be caused by fiber defects such as nonidentical core diameters, cores not in center of the fiber, and noncircular cores. Such defects are depicted in Figure 7:

FIGURE 7

SPLICE LOSS CAUSED BY FIBER MANUFACTURE

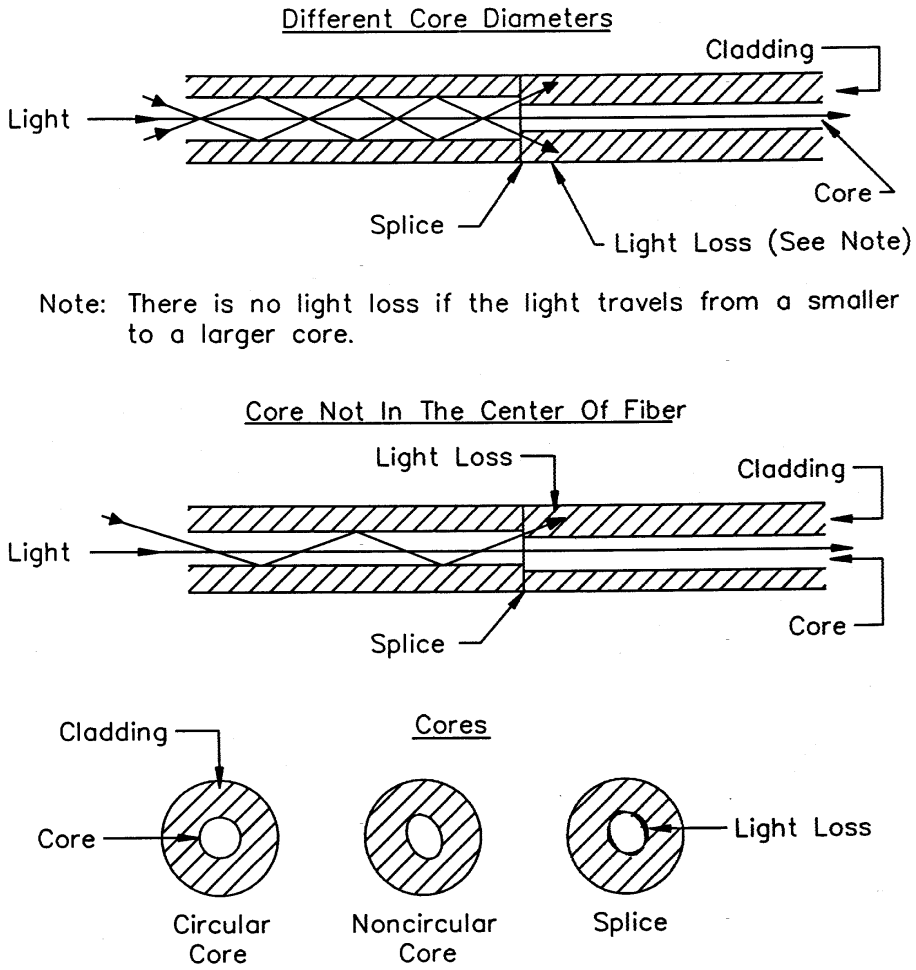

(ii) Undesirable splice losses are caused by poor splicing techniques including splicing irregularities such as improper cleaves and dirty splices. Typical cleave problems are illustrated in Figure 8:

FIGURE 8

IMPROPER CLEAVES VERSUS PROPER CLEAVE

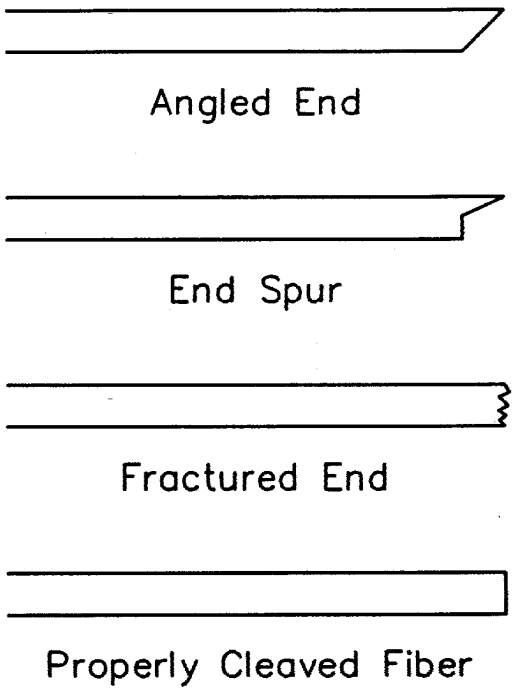

(4) *Handling precautions.* The following precautions shall be observed:

(i) Avoid damaging the cable during handling operations prior to splicing. Minor damage may change the transmission characteristics of the fibers to the extent that the cable section will have to be replaced;

(ii) The cable manufacturer's recommendations concerning pulling tension shall be observed. The maximum pulling tension for most fiber optic cable is 2669 newtons (600 pound-force);

(iii) The cable manufacturer's recommendations concerning bending radius shall be observed. Unless the cable manufacturer's recommendation is more stringent, the minimum bending radius for fiber optic cable shall be 20 times the cable diameter;

(iv) The cable manufacturer's recommendations concerning buffer tube bending radius shall be observed. Unless the cable manufacturer's recommendation is more stringent, the minimum bending radius for buffer tubes is usually between 38 millimeters (mm) (1.5 in.) and 76 mm (3.0 in.). The bending limitations on buffer tubes are intended to prevent kinking. Buffer tube kinking may cause excessive optical loss or fiber breakage; and

(v) Handle unprotected glass fibers carefully to avoid introducing flaws such as scratched or broken fibers.

(5) *Personnel safety.* The following safety precautions shall be observed:

(i) Safety glasses shall be worn when handling glass fibers;

(ii) Never view open-ended fibers with the naked eye or a magnifying device. Improper viewing of a fiber end that is transmitting light may cause irreparable eye damage; and

(iii) Dispose of bare scrap fibers by using the sticky side of a piece of tape to pick up and discard loose fiber ends. Fiber scraps easily penetrate the skin and are difficult to remove.

(6) *Equipment requirements.* (i) Fiber optic splices shall be made in areas where temperature, humidity, and cleanliness can be controlled. Both fusion and mechanical splicing techniques may require a splicing vehicle equipped with a work station that will allow environmental control.

(ii) Both fusion and mechanical splicing techniques are permitted on RUS financed projects. When using the mechanical splicing technique, only RUS accepted mechanical fiber optic splice connectors can be used.

(iii) Fusion splicing machines shall be kept in proper working condition. Regular maintenance in accordance with the machine manufacturer's recommendations shall be observed.

(iv) Mechanical splicing tools shall be in conformance with the tool manufacturer's recommendations.

(v) An optical time domain reflectometer (OTDR) shall be used for testing splices. The OTDR shall be stationed at the central office or launch point for testing individual splices as they are made and for end-to-end signature tests for the fiber optic link.

(vi) An optical power meter shall be used for end-to-end cable acceptance tests.

(vii) A prerequisite for the successful completion of a fiber optic splicing endeavor is the presence of a talk circuit between the splicing technician in the splicing vehicle and the operator of the OTDR in the central office. The splicing technician and the OTDR operator shall have access to communications with each other in order to inform each other as to:

(A) Which splices meet the loss objectives;

(B) The sequence in which buffer tubes and fibers are to be selected for subsequent splicing operations; and

(C) The timing required for the performance of OTDR testing to prevent making an OTDR test at the same time a splice is being fused.

(7) *Cable preparation.* (i) Engineering work prints shall prescribe the cable slack needed at splice points to reach the work station inside the splicing vehicle. Consideration should be given to the slack required for future maintenance activity as well as initial construction activities. The required slack may be different for each splice point, depending on the site logistics. However, the required slack is seldom less than 15 meters (50 feet). The amount of slack actually used shall be recorded for each splice point to assist future maintenance and restoration efforts.

(ii) The splice case manufacturer's recommendations concerning the amount of cable sheath to be removed shall be followed to facilitate splicing operations. The length of the sheath opening shall be identified with a wrap of plastic tape.

(iii) If the cable contains a rip cord, the cable jacket shall be ring cut approximately 15 cm (6 in.) from the end and the 15 cm (6 in.) of cable jacket shall be removed to expose the rip cord. The rip cord shall be used to slit the jacket to the tape mark.

(iv) If the cable does not contain a rip cord, the cable jacket shall be slit using a sheath splitter. No cuts shall be made into the cable core nor shall the buffer tubes be damaged.

(v) If the cable contains an armor sheath, the outer jacket shall be opened along the slit and the jacket shall be removed exposing the armor sheath. The armor shall be separated at the seam and pulled from the cable exposing the inner jacket. The armor shall be removed making allowances for a shield bond connector. The inner sheath shall be slit using a sheath splitter or rip cord. The cable core shall not be damaged nor shall there be any damage to the buffer tubes. The jacket shall be peeled back and cut at the end of the slit. The exposed buffer tubes shall not be cut, kinked, or bent.

(vi) After the cable sheath has been removed, the binder tape shall be removed from the cable. The cable shall not be crushed or deformed.

(vii) The buffer tubes shall be unstranded one at a time. The buffer tubes shall not be kinked.

(viii) If the cable is equipped with a strength member, the strength member shall be cut to the length recommended by the splice case manufacturer.

(ix) Each buffer tube shall be inspected for kinks, cuts, and flat spots. If damage is detected, an additional length of cable jacket shall be removed and all of the buffer tubes shall be cut off at the point of damage.

(x) The cable preparation sequence shall be repeated for the other cable end.

(8) *Shield bonding and grounding.* For personnel safety, the shields and metallic strength members of the cables to be spliced shall be bonded together and grounded before splicing activities are started. (See paragraphs (g)(4), and (g)(5)(i) through (g)(5)(iii) of this section for final bonding and grounding provisions).

(9) *Fiber optic color code.* The standard fiber optic color code for buffer tubes and individual fibers shall be as shown in Table 7:

TABLE 7.—FIBER AND BUFFER TUBE IDENTIFICATION

Buffer tube and fiber No.	Color
1	Blue.
2	Orange.
3	Green.
4	Brown.
5	Slate.
6	White.
7	Red.
8	Black.
9	Yellow.
10	Violet.
11	Rose.
12	Aqua.
13	Blue/Black Tracer.
14	Orange/Black Tracer.
15	Green/Black Tracer.
16	Brown/Black Tracer.
17	Slate/Black Tracer.
18	White/Black Tracer.
19	Red/Black Tracer.
20	Black/Yellow Tracer.
21	Yellow/Black Tracer.
22	Violet/Black Tracer.
23	Rose/Black Tracer.
24	Aqua/Black Tracer.

(10) *Buffer tube removal.* (i) The splice case manufacturer's recommendation shall be followed concerning the total length of buffer tube to be removed. Identify the length to be removed with plastic tape.

(ii) Experiment with a scrap buffer tube to determine the cutting tool adjustment required to ring cut a buffer tube without damaging the fibers.

(iii) Buffer tubes shall be removed by carefully ring cutting and removing approximately 15 to 46 cm (6 to 18 in.) of buffer tube at a time. The process shall be repeated until the required length of buffer tube has been removed, including the tape identification marker.

(11) *Coated fiber cleaning.* (i) Each coated fiber shall be cleaned. The cable manufacturer's recommendations shall be followed concerning the solvent required to clean the coated fibers. Reagent grade isopropyl alcohol is a commonly used cleaning solvent.

(ii) A tissue or cotton ball shall be soaked in the recommended cleaning solvent and the coated fibers shall be carefully wiped one at a time using a clean tissue or cotton ball for each coated fiber. Caution shall be exercised to avoid removing the coloring agent from the fiber coating.

(12) *Fiber coating removal.* (i) Fiber coatings shall be removed. In accordance with the splicing method used, the splice case manufacturer's recommendation shall be followed concerning the length of fiber coating to be removed.

(ii) The recommended length of fiber coating shall be removed only on the two fibers to be spliced. Fiber coating removal shall be performed on a one-fiber-at-a-time basis as each splice is prepared.

(13) *Bare fiber cleaning.* After the fiber coating has been removed, the bare fibers shall be cleaned prior to splicing. Each fiber shall be wiped with a clean tissue or cotton ball soaked with the cleaning solvent recommended by the cable manufacturer. The bare fiber shall be wiped one time to minimize fiber damage. Aggressive wiping of bare fiber shall be avoided as it lowers the fiber tensile strength.

(14) *Fiber cleaving.* Cleaving tools shall be clean and have sharp cutting edges to minimize fiber scratches and improper cleave angles. Cleaving tools that are recommended by the manufacturer of the splicing system shall be used.

(15) *Cleaved fiber handling.* The cleaved and cleaned fiber shall not be allowed to touch other objects and

shall be inserted into the splicing device.

(16) *Completion of the splice.* (i) In accordance with the method of splicing selected by the borrower, the splice shall be completed by either fusing the splice or by applying the mechanical connector.

(ii) Each spliced fiber shall be routed through the organizer tray one at a time as splices are completed. The fibers shall be organized one at a time to prevent tangled spliced fibers. The splice case manufacturer's recommendation shall be followed concerning the splice tray selection.

(17) *Fiber optic testing.* Fiber optic testing shall be performed in accordance with RUS Bulletin 345–63, ''RUS Standard for Acceptance Tests and Measurements of Telephone Plant,'' PC–4, (Incorporated by reference at § 1755.97).

(18) *Cable acceptance.* Installed cable shall be tested and pass the inventory and acceptance testing specified in the Telephone System Construction Contract (Labor and Materials), RUS Form 515. The tests and inspections shall be witnessed by the borrower's resident project representative.

(f) *Splice arrangements for fiber optic cables*—(1) *Aerial splices.* Cable slack at aerial splices shall be stored either on the messenger strand, on the pole, or inside a pedestal at the base of the pole. A typical arrangement for the storage of slack cable at aerial splices is shown in Figure 9:

FIGURE 9
AERIAL SPLICE STORED INSIDE PEDESTAL

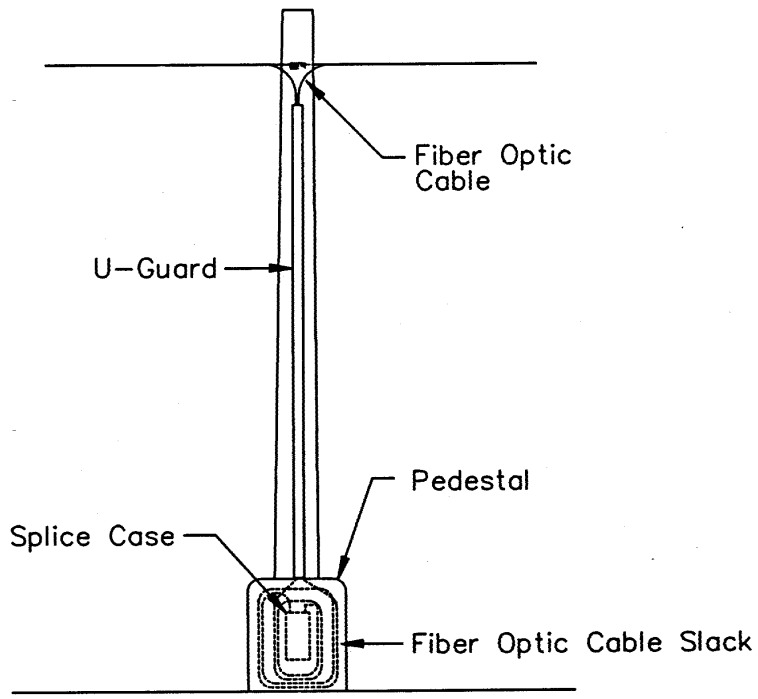

Note: See Figure 11 for details concerning storage of splice case inside pedestal.

(2) *Buried splices.* Buried splices shall be installed in handholes to accommodate the splice case and the required splicing slack. An alternative to the handhole is a pedestal specifically designed for fiber optic splice cases. Typical arrangements for buried cable splices are shown in Figures 10 and 11:

FIGURE 10

BURIED SPLICE STORED INSIDE HANDHOLE

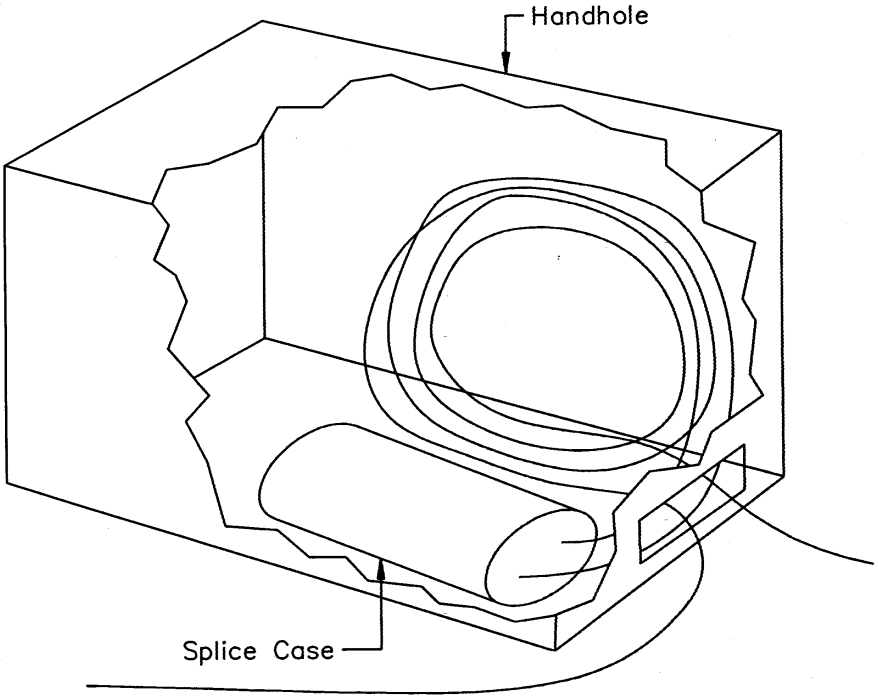

Note: Ground wires omitted for clarity. See Figure 19 for bonding and grounding details.

FIGURE 11
BURIED SPLICE STORED INSIDE PEDESTAL HOUSING

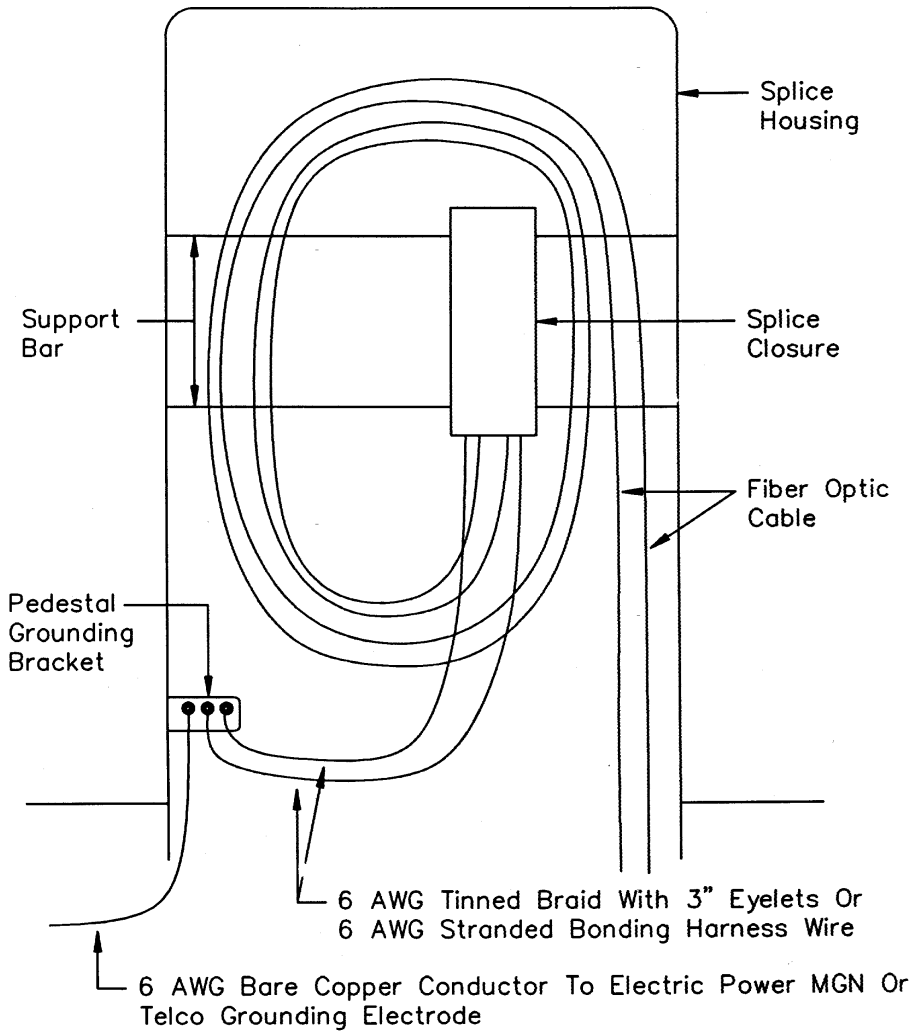

(3) *Underground manhole splices.* Underground splices shall be stored in manholes on cable hooks and racks fastened to the manhole wall. The cable slack shall be stored on cable hooks and racks as shown in Figure 12:

FIGURE 12
MANHOLE SPLICE STORAGE

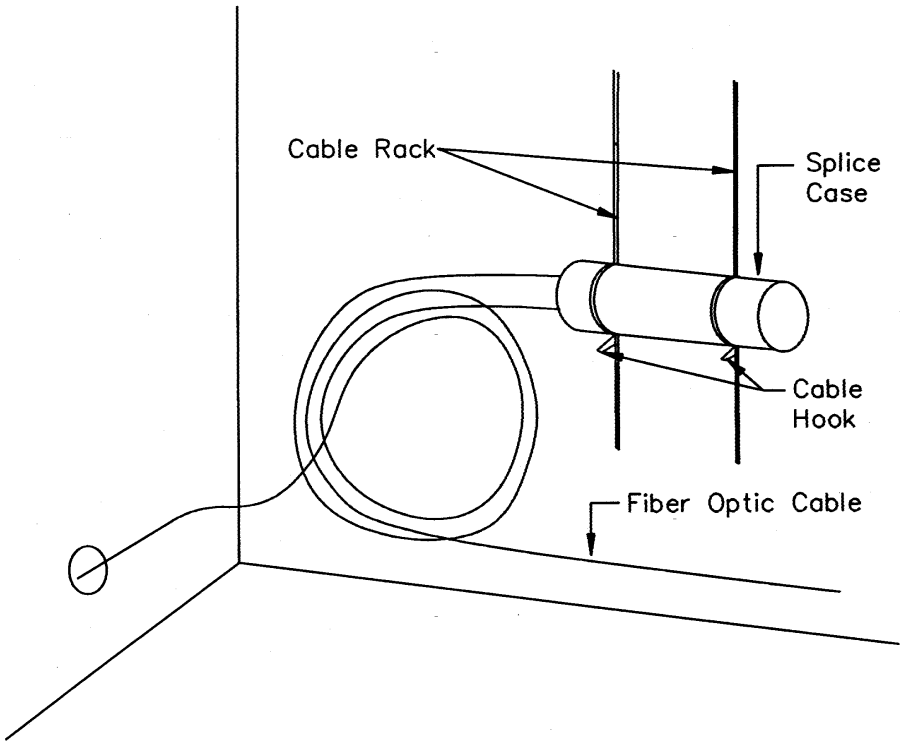

(4) *Central office cable entrance.* (i) Filled cable or filled splices are not recommended for use inside central offices except in cable vault locations. Outside plant cable sheath and cable filling compound are susceptible to fire and will support combustion. Fire, smoke, and gases generated by these materials during burning are detrimental to telephone switching equipment.

(ii) As a first choice, the outside plant fiber optic cable shall be spliced to an all-dielectric fire retardant cable in a cable vault with the all-dielectric cable extending into the central office and terminating inside a fiber patch panel.

(iii) As a second choice, the outside plant cable may be spliced inside the central office if a flame retardant fiber optic splice case or a noncombustible central office splice housing equipped with organizer trays is used to contain the splice.

(iv) In cases referenced in paragraphs (f)(4)(ii) and (f)(4)(iii) of this section, as a minimum the fire retardant all-dielectric cable used to provide the connection between the cable entrance splice and the fiber patch panel shall be listed as Communication Riser Cable (Type CMR) in accordance with Sections 800–50 and 800–51(b) of the 1993 National Electrical Code.

(v) Splices inside the central office shall be made as close as practicable to the point where the outside plant cables enter the building. Except in cable

vault locations, outside plant cables within the central office shall be wrapped with fireproof tape or enclosed in noncombustible conduit.

(g) *Bonding and grounding fiber optic cable, copper cable, and copper service wire*—(1) *Bonding.* Bonding is electrically connecting two or more metallic items of telephone hardware to maintain a common electrical potential. Bonding may involve connections to another utility.

(2) *Copper cable shield bond connections.* (i) Cable shields shall be bonded at each splice location. Only RUS accepted cable shield bond connectors shall be used to provide bonding and grounding connections to metallic cable shields. The shield bond connector manufacturer's instructions shall be followed concerning installation and use.

(ii)(A) Shield bonding conductors shall be either stranded or braided tinned copper wire equivalent to a minimum No. 6 American Wire Gauge (AWG) and shall be RUS accepted. The conductor connections shall be tinned or of a compatible bimetallic design to avoid corrosion problems associated with dissimilar metals. The number of shield bond connectors required per pair size and gauge shall be as shown in Table 8:

TABLE 8.—SHIELD BOND CONNECTORS PER PAIR SIZE AND GAUGE

19 AWG	Pair size and gauge			No. of shield bond connectors
	22 AWG	24 AWG	26 AWG	
0–25	0–100	0–150	0–200	1
50–100	150–300	200–400	300–600	2
150–200	400–600	600–900	900–1500	3
300–600	900–1200	1200–2100	1800–3600	4

(B) It is permissible to strap across the shield bond connectors of several cables with a single length of braided wire. However, both ends of the braid shall be terminated on the pedestal ground bracket to provide a bonding loop. Shield bond connection methods for individual cables are shown in Figures 13 through 15, and the bonding of several cables inside a pedestal using the bonding loop is shown in Figure 16:

FIGURE 13
BONDING AND GROUNDING CABLES INSIDE PEDESTALS

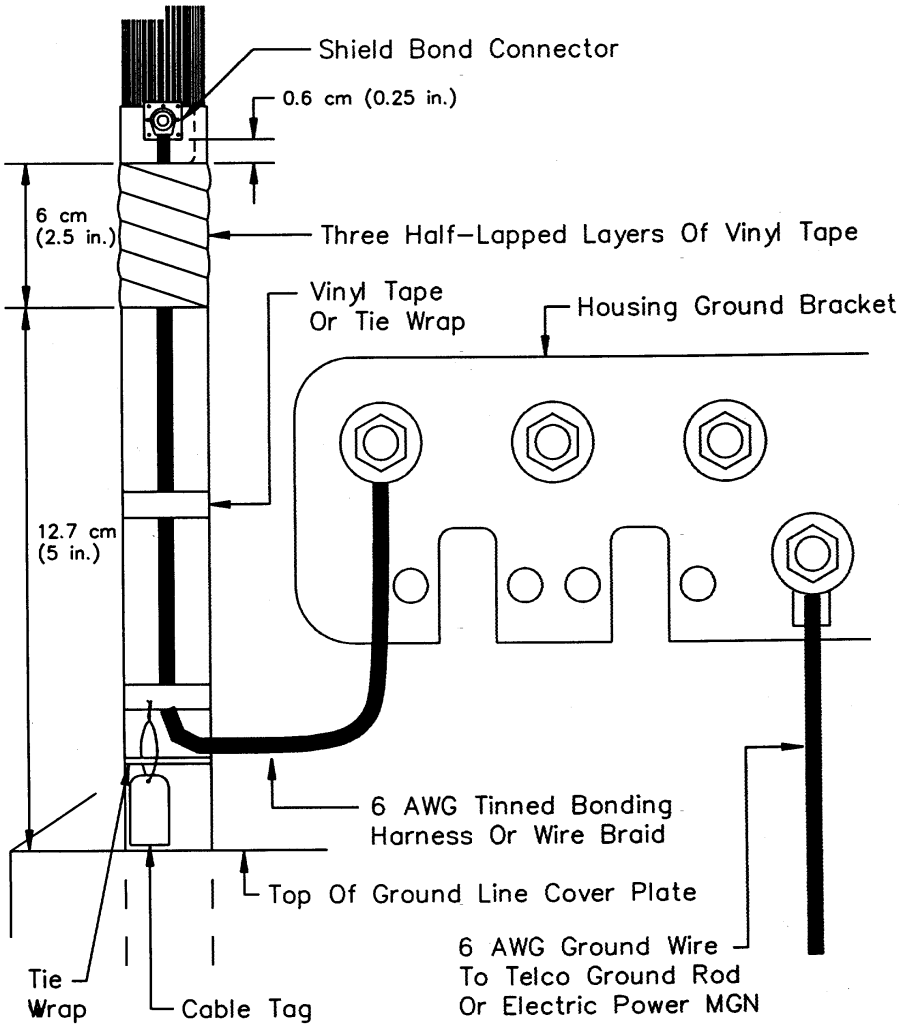

FIGURE 14

BONDING AND GROUNDING OF LARGE CABLES INSIDE PEDESTALS USING MULTIPLE SHIELD BOND CONNECTORS AND HARNESS WIRES

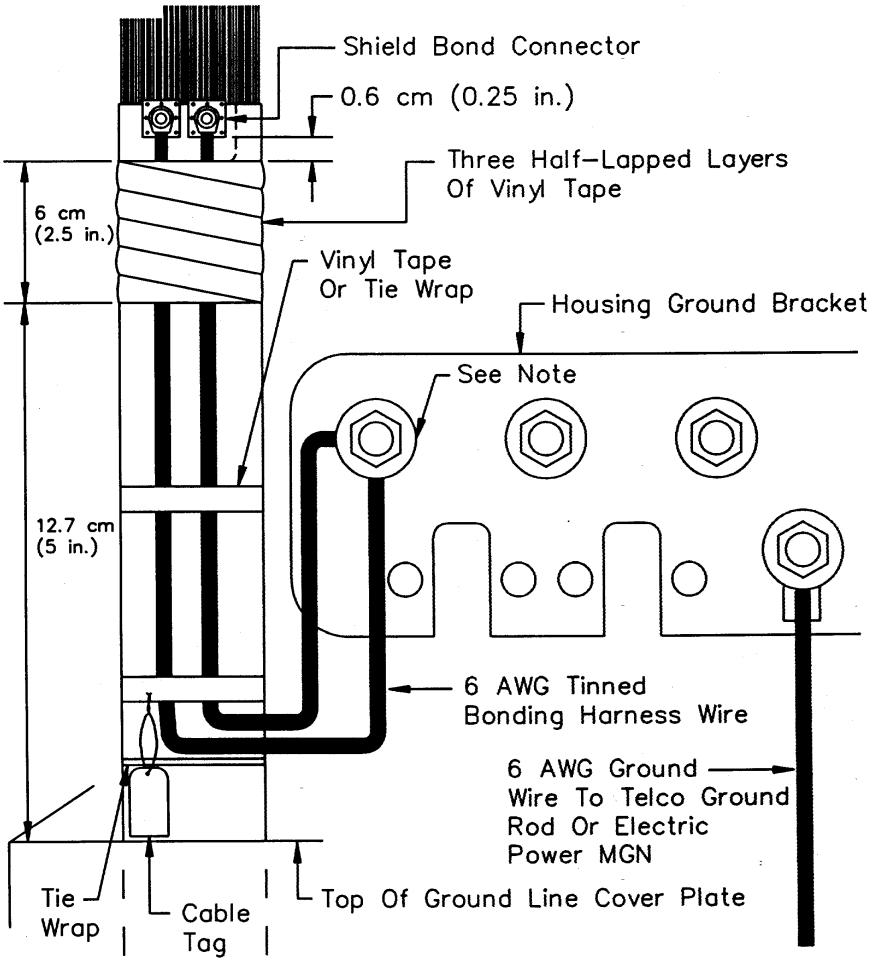

Note: The maximum number of harness wires that can be installed on each stud of the ground bracket shall be in accordance with the manufacturer's instructions.

FIGURE 15
ALTERNATIVE METHOD OF BONDING AND GROUNDING LARGE CABLES IN PEDESTALS USING MULTIPLE SHIELD BOND CONNECTORS AND 6 AWG WIRE BRAID

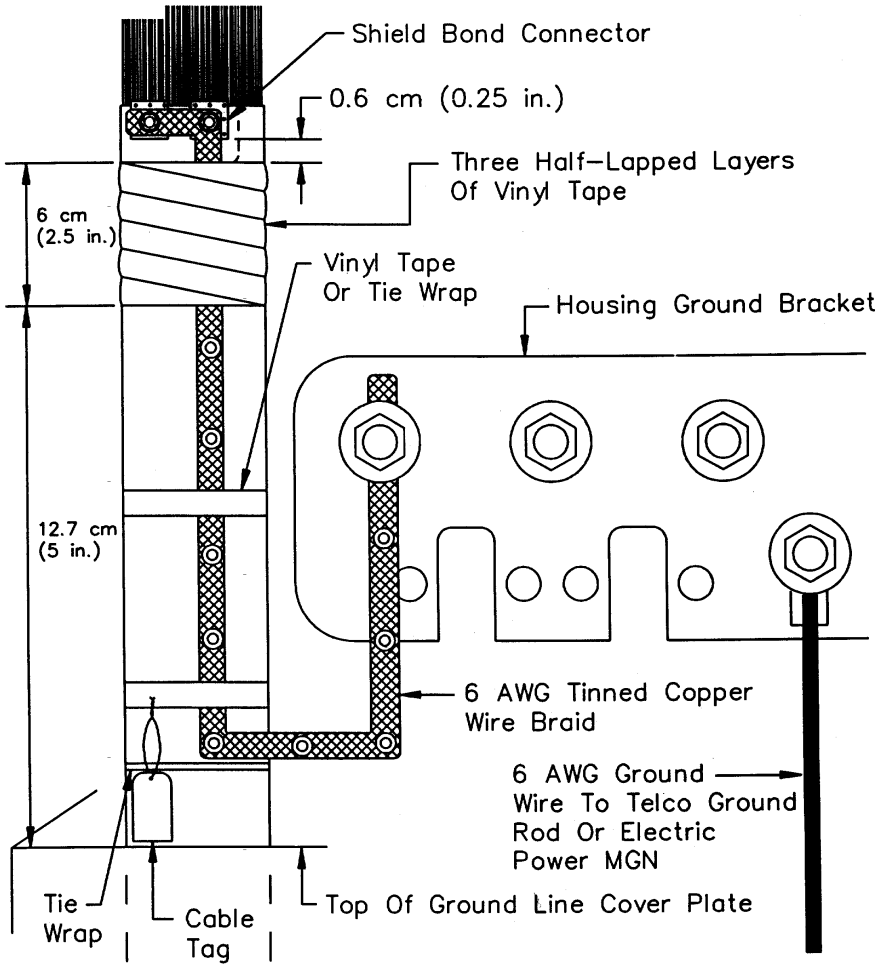

FIGURE 16
ALTERNATIVE METHOD OF BONDING AND GROUNDING SEVERAL CABLES IN PEDESTALS USING SHIELD BOND CONNECTORS AND 6 AWG WIRE BRAID LOOP

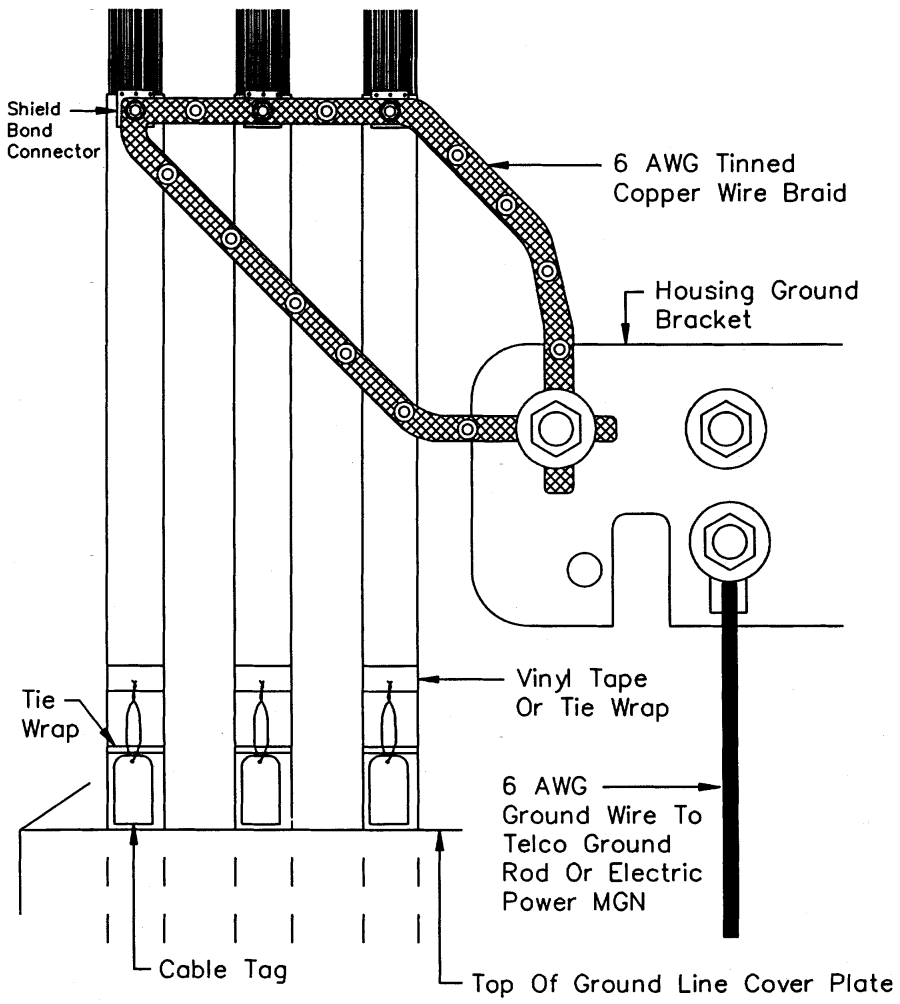

(3) *Buried service wire shield bond connections.* Buried service wire shields shall be connected to the pedestal bonding and grounding system. Typical buried service wire installations are shown in Figures 17 and 18. In addition to the methods referenced in Figures 17 and 18, the shields of buried service wires may also be connected to the pedestal bonding and grounding system using buried service wire bonding harnesses listed on Page 3.3.1, Item ''gs-b,'' of RUS Bulletin 1755I–100. RUS Bulletin 1755I–100 may be purchased from the

Superintendent of Documents, U.S. Government Printing Office, Washington, DC 20402. When those harnesses are used they shall be installed in accordance with the manufacturer's instructions. Figures 17 and 18 are as follows:

FIGURE 17
GROUNDING SERVICE WIRE SHIELDS USING SERVICE WIRE CLAMP

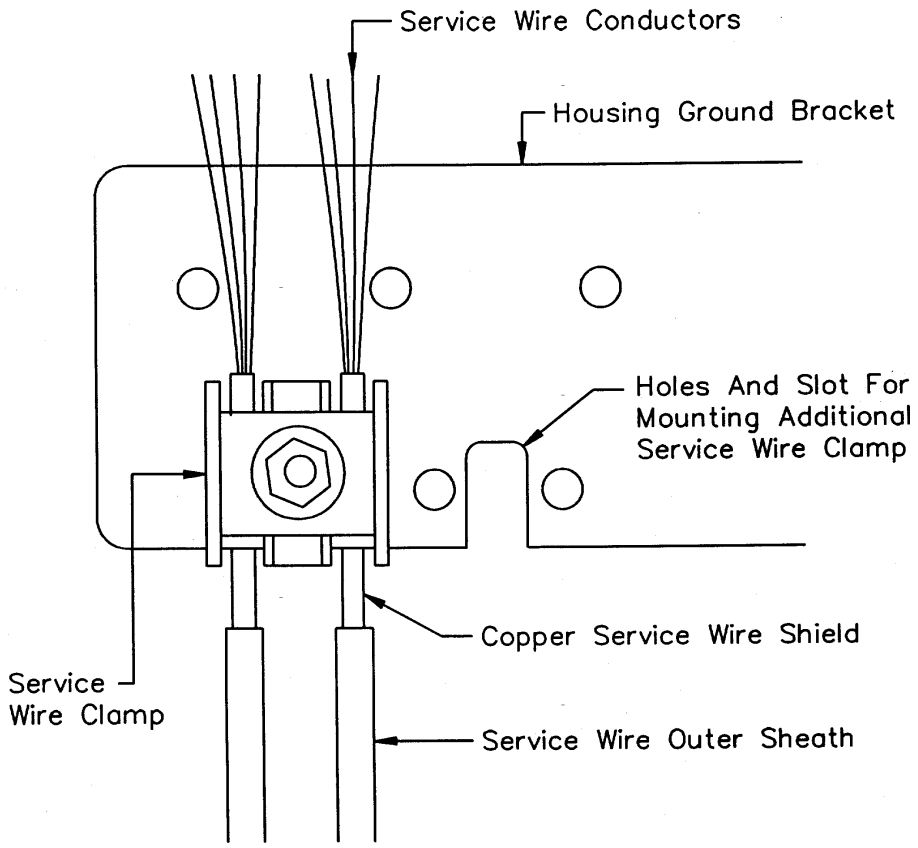

Note: Provide a loop in service drops to allow for movement of the drops without damage to the grounding connection.

FIGURE 18

ALTERNATIVE METHOD OF GROUNDING BURIED SERVICE WIRES INSIDE PEDESTALS

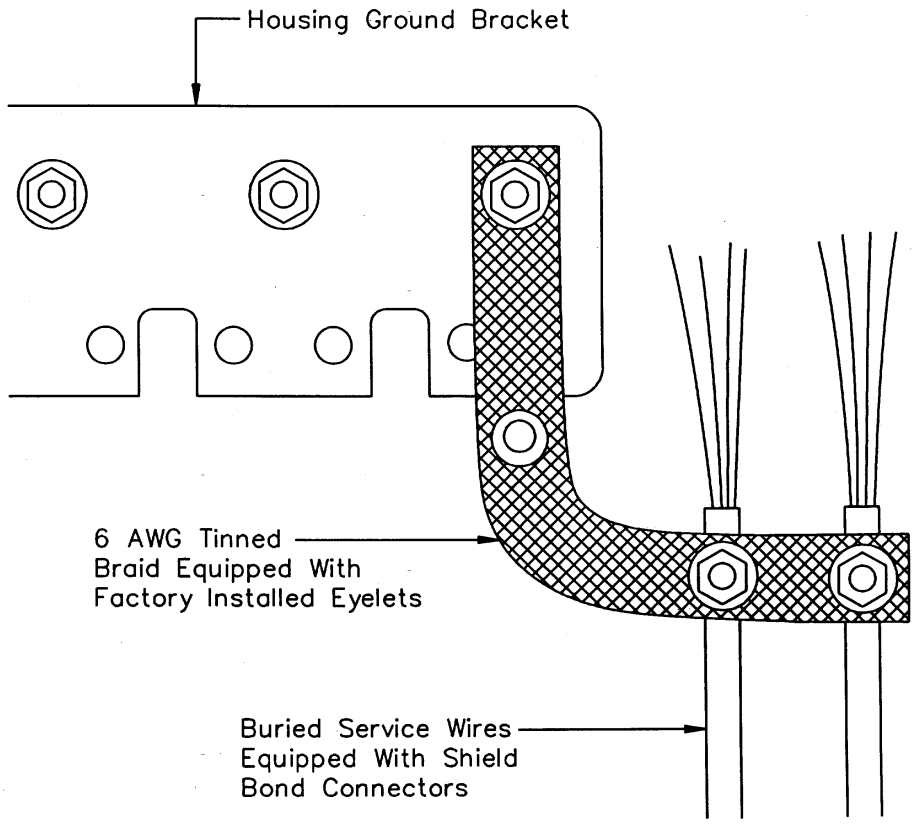

(4) *Fiber optic cable bond connections.* (i) The cable shield and metallic strength members shall be bonded at each splice location. Only RUS accepted fiber optic cable shield bond connectors shall be used to provide bonding connections to the metallic cable shields. The shield bond connector manufacturer's instructions shall be followed concerning installation and use.

(ii) Shield bonding conductors shall be either stranded or braided tinned copper wire equivalent to a minimum No. 6 American Wire Gauge (AWG) and shall be RUS accepted. The conductor connections shall be tinned or of a compatible bimetallic design to avoid corrosion problems associated with dissimilar metals.

(5) *Grounding.* (i) Grounding is electrically connecting metallic telephone hardware to a National Electrical Safety Code (NESC) acceptable grounding electrode. Acceptable grounding electrodes are defined in the Rule 99A of the NESC.

(ii) The conductor used for grounding metallic telephone hardware shall be a minimum No. 6 AWG solid, bare, copper conductor.

(iii) For copper and fiber optic cable plant, all cable shields, all metallic strength members, and all metallic hardware shall be:

(A) Grounded at each splice location to a driven grounding electrode (ground rod) of:

(*1*) At least 1.5 meters (5 feet) in length where the local frost level is normally less than 0.30 meters (1 foot) deep; or

(*2*) At least 2.44 meters (8 feet) in length where the local frost level is normally 0.30 meters (1 foot) or deeper; and

(B) Bonded to a multi-grounded power system neutral when the splice is within 1.8 meters (6 feet) of access to the grounding system of the multi-grounded neutral system. Bonding to the multi-grounded neutral of a parallel power line may help to minimize telephone interference on long exposures with copper cable plant. Consideration, thus, should be given to completing such bonds, at least four (4) times each mile, when splices are greater than 1.8 meters (6 feet) but less than 4.6 meters (15 feet) from access to the multi-grounded neutral.

(6) *Bonding and grounding splice cases.* (i) Splice cases are equipped with bonding and grounding devices to ensure that cable shields and metallic strength members maintain electrical continuity during and after cable splicing operations. The splice case manufacturer's recommendations shall be followed concerning the bonding and grounding procedures. Conductors used for bonding shall be either stranded or braided tinned copper wire equivalent to 6 AWG. Conductors used for grounding shall be a solid, bare, copper wire equivalent to minimum No. 6 AWG.

(ii) Buried splice cases installed in either handholes or pedestals shall be grounded such that the cable shield grounds are attached to a common ground connection that will allow the lifting of a ground on the cable shield in either direction to permit efficient cable locating procedures. As a first choice, buried grounding conductor(s) shall be bare. However, if two or more grounding conductors are buried in the s they shall be insulated to avoid shorts when a locating tone is applied.

(iii) A typical bonding and grounding method for fiber optic splices is shown in Figure 19:

FIGURE 19

BONDING AND GROUNDING BURIED FIBER OPTIC SPLICES

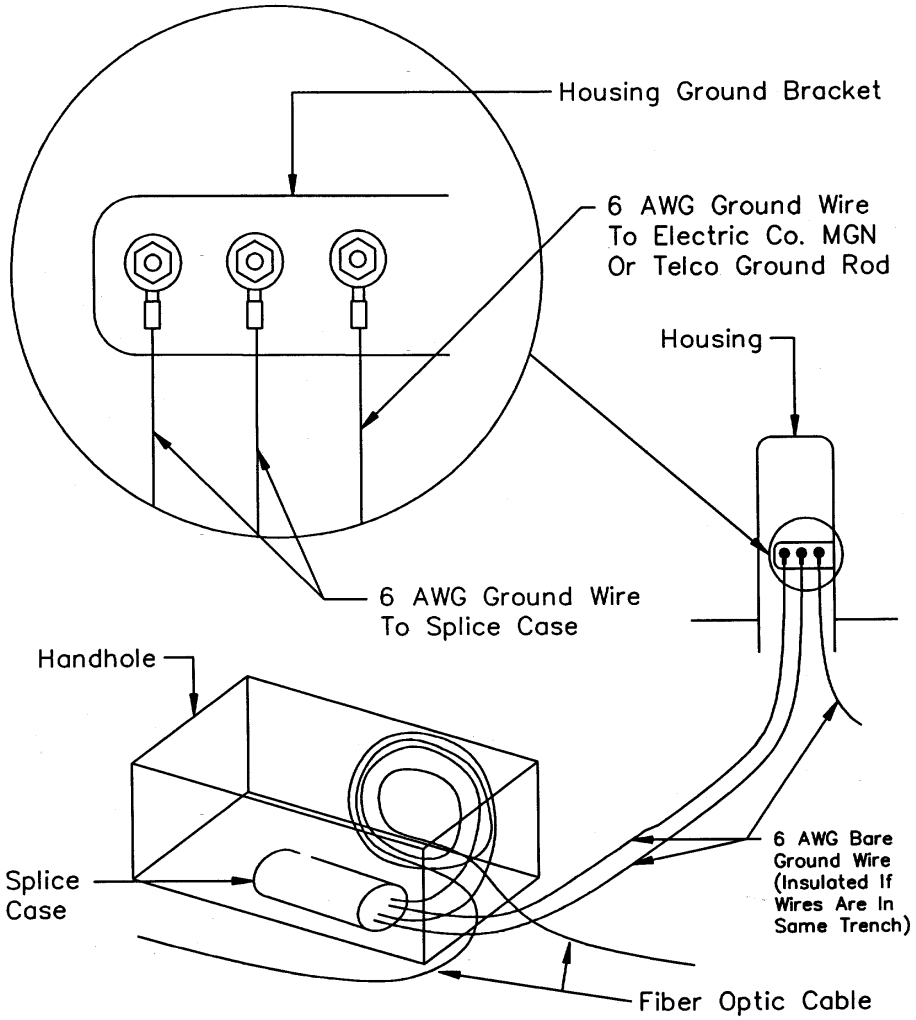

(7) *Bonding and grounding central office cable entrances.* The RUS Telecommunications Engineering and Construction Manual (TE&CM) Section 810 provides bonding and grounding guidance for central office cable entrances. Splicing operations shall not be attempted before all metallic cable shield and strength members are bonded and grounded.

[60 FR 5097, Jan. 26, 1995; 60 FR 9079, Feb. 16, 1995]

§§1755.201—1755.216 [Reserved]

§1755.217 Postloan engineering services contract, RUS Form 217.

Engineering services provided for major construction are to be covered by the Postloan Engineering Services Contract, RUS Form 217. The requirements and procedures for the use of this contract are contained in 7 CFR 1753.17.

POSTLOAN ENGINEERING SERVICES CONTRACT—TELECOMMUNICATIONS SYSTEMS

AGREEMENT made _____, _____, between _____ (hereinafter called the ''Owner'') and _____ (hereinafter called the ''Engineer'').

In consideration of the mutual undertakings herein contained, the parties hereto agree as follows:

Section 1. Definitions. For purposes of this Agreement the following definitions shall be used:

Administrator. The Administrator of RUS or personnel delegated authority to act for the Administrator.

Borrower's Environmental Report. An environmental study as described in 7 CFR 1794. For the purposes of this contract, this is the level of environmental review as described in 7 CFR 1794 required for the Project by RUS. In most cases of telecommunications construction, this will be a Borrower's Environmental Report.

Contractor. A provider of goods or services for the Project, other than the Engineer.

Construction Administration. The coordination of construction activities.

Construction Drawings. The drawings developed through the Staking used to guide the construction of outside plant facilities.

Cut Sheets. The complete and sequential plans for Cutover.

Cutover. The orderly integration of new facilities with existing facilities.

Description of Project. The work and facilities listed by principal subdivisions in Table 1.

Inspect. To monitor and examine the work of the Contractor, compare the work to the contract, and note the details and quantities of construction on records and progress reports.

Inspector. A competent representative of the Engineer who inspects construction and reports compliance or noncompliance to the Resident.

Loan Design. Supplemental information which supports a loan application, as described in 7 CFR 1737.32.

Marker. A physical indicator at the construction site to guide the Contractor in construction of facilities.

Project. The telecommunications construction and procurements financed by a particular RUS loan.

Resident. The competent representative of the Engineer who is delegated full time ''on site'' Construction Administration responsibilities of the Engineer.

Staking. The determination of the approximate location of the facilities to be placed and creation of schematic drawings which show the facilities located with respect to the physical terrain.

Work Sector. A localized portion of the Project.

Section 2. General

2.01 Financing of the Project. All or part of the financing of the Project, including costs of materials, construction, installation, and engineering, shall be by a loan administrated by RUS.

If the Project is financed in part by the Rural Telephone Bank, an agency of the United States of America, the references in this Agreement to ''The United States of America'' and the ''Government'' shall mean the ''Rural Telephone Bank'' as well, and the references to the ''Administrator'' shall mean the ''Governor'' of the Rural Telephone Bank as well. If the Project is financed wholly by the Rural Telephone Bank, the references to ''The United States of America'' and the ''Government'' shall mean the ''Rural Telephone Bank'' and the references to the ''Administrator'' shall mean the ''Governor'' of the Rural Telephone Bank.

2.02. Compliance with Regulations. The objective of this Agreement is for the Owner to obtain engineering assistance in completing a Project, while complying with RUS postloan construction regulations. The Engineer shall, therefore, perform all engineering services requested by the Owner hereunder, and render engineering advice and assistance, so as to enable the Owner to comply with 7 CFR Part 1753 and other applicable RUS regulations.

2.03 General Obligation. The Engineer shall, consistent with sound professional practices, diligently and competently render the engineering services required in this Agreement. These engineering services shall be reasonably necessary or advisable for the expeditious, economical, and sound design and construction of the Project listed in Table 1 by means of the services described in this agreement and its attachments. The Engineer shall also render other preparatory work as is necessary to place such portion of the Project in service, except where such duties are excluded from the terms of this Agreement. The enumeration of specific duties and obligations to be performed by the Engineer and included herewith, shall not be construed to limit the foregoing general undertaking of the Engineer, with reference to such portion of the Project.

2.04 Description of Project. The Project shall consist of the subdivisions of the work and facilities listed by exchanges in Table 1 attached hereto.

Section 3. Miscellaneous

3.01 Insurance. The Engineer shall take out and maintain throughout the contract period the minimum insurance as required in Subpart C of 7 CFR part 1788 in effect at the date of this Agreement.

3.02 Project Schedule. The Engineer shall prepare in collaboration with the Owner, a work and progress report schedule to facilitate coordination of activities for Cutover of the Owner's Project. The Engineer shall report construction progress to the Owner monthly during all times when one or more contracts are open.

3.03 Plans and Specifications. Complete and detailed plans and specifications, drawings, maps and other engineering documents as required for the construction of the Project (all of the foregoing being herein sometimes collectively called the ''plans and specifications''), shall be prepared by the Engineer, pursuant to the various attachments to this Agreement, and made a part hereof.

3.04 Scope of Services. The Engineer shall not be obligated to perform any services for the Project or any part thereof except to the extent that the Project as defined in Table 1, (or the parts thereof and the services related thereto) are delineated in (1) the attachments to this Agreement and (2) the plans and specifications approved by the Owner and the Administrator, as they may be amended from time to time, prepared pursuant to this Agreement.

3.05 Standards. All maps, drawings, plans, specifications, estimates, studies and other engineering documents required to be prepared or submitted by the Engineer under this Agreement shall conform to the applicable standard specifications and other forms prescribed by the Administrator and in effect at the date of this Agreement.

3.06 Termination by Owner. The Owner may at any time terminate this Agreement by giving notice to the Engineer, in writing, to that effect not less than thirty (30) days prior to the effective date of termination specified in this notice. Such notice shall be deemed given if delivered or mailed to the last known address of the Engineer. From and after the effective date specified in such notice this Agreement shall be terminated.

When termination is initiated by the owner, compensation for services hereunder shall be computed as far as possible in accordance with the provisions of the applicable attachment to this Agreement. To the extent that the provisions of any such attachment cannot be applied because construction is incomplete at the effective date of such termination, then the Engineer shall be paid for engineering services in respect to such incomplete construction, a sum which shall bear the same ratio to the compensation which would have been payable under the provisions of any such attachment to this Agreement, if such construction had been completed. If requested by the Owner, the Engineer shall submit to the Owner in duplicate a certified statement of the Engineer's actual expenses in respect of such incomplete construction. All compensation invoiced by the Engineer and payable under this paragraph shall be due and payable thirty (30) days after the approval by the Owner and the Administrator of the amount due. In any case, compensation shall be due 30 days after the date Project documentation is delivered to the Owner under paragraph 3.08 of this Agreement.

3.07 Termination by the Engineer. The Engineer shall have the right, by giving to the Owner not less than thirty (30) days notice in writing, to terminate this Agreement if the Engineer shall have been prevented by conditions beyond the control and without the fault of the Engineer: (i) from commencing performance of this Agreement for a period of twelve (12) months from the date of this Agreement; or (ii) from proceeding with the completion of full performance of any remaining services, required of the Engineer pursuant to this Agreement, for a period of six (6) months from the date of last performance by the Engineer of other services required pursuant to this Agreement. From and after the effective date specified in such notice this Agreement shall be terminated, except that the Engineer shall be entitled to receive compensation for services performed hereunder, computed and payable in the same manner as set forth in paragraph 3.06.

3.08 Project Documents. Upon final payment by the Owner to the Engineer in accordance with the Statement of Engineering Fees, RUS Form 506, the following documents in final form become the property of the Owner and may be used by the Owner for Project operation and future development:

1. ''Final record'' system maps, in master form (electronic or original hard copy)
2. Cable schematics
3. Construction sheets
4. Cable assignment sheets
5. All contract documents including attached plans and specifications and final inventories.

All other documents and engineering records, including preliminary forms of the above documents, remain the property of the Engineer.

Upon termination of this Agreement the Engineer shall deliver to the Owner at a mutually agreeable place within 5 working days after the date of termination all Project documents (electronic or original hard copy) including records, map tracings, plans and specifications, test data, and field notes.

If requested by the Owner upon completion of the Project, the Engineer shall deliver to the Owner those documents which are the Owner's property, at a mutually agreed upon place and time.

3.09 Employee's Qualifications. The obligations and duties to be performed by the Engineer under this Agreement shall be performed by persons qualified to perform such duties efficiently. The Engineer, if the Owner shall so direct, shall promptly replace any Resident or other person employed by the Engineer in connection with the Project.

For information of the Owner and the Administrator, the Engineer shall file with the Owner statements signed by the Engineer of the qualifications, including resumes of specific experience, and the duties to be assigned to each Resident, Inspector and such other personnel assigned to the Project as may be requested by the Owner and Administrator.

The term Resident and Inspector, as used in this Agreement, shall mean a person properly trained and experienced to perform the services required under the terms of this Agreement, and does not mean that the person performing those duties must be a licensed or a registered professional engineer.

3.10 License. The Engineer shall comply with all applicable statutes pertaining to engineering and warrants that _____ (Fill in name of individual) who shall be in responsible charge of the Project possesses license number _____ issued by the State of _____ on the _____ day of _____.

3.11 Payments of Engineer's Employees. For each invoice the Engineer, if requested by the Owner, shall furnish to the Owner as a prior condition to payment, a certificate to the effect that all salaries or wages earned by the employees of the Engineer in connection with the Project have been fully paid by the Engineer up to and including a date not more than thirty (30) days prior to the date of such invoice. Before final payment under this Agreement the Engineer shall furnish to the Owner a certificate that all of the employees of the Engineer have been paid for services rendered by them in connection with the Project, and that all other obligations which might become a lien upon the Project have been paid.

3.12 Engineer's Records. The Owner and the Administrator shall have the right to Inspect and audit all payrolls, records, and accounts of the Engineer relevant to the work performed for the purposes of this Agreement and the Engineer agrees to provide all reasonable facilities necessary for such inspection and audit.

3.13 Compensation. For the purpose of this Agreement, compensation for each type of work covered by the attachments and thereby made a part of this Agreement shall be as outlined in said attachments except where compensation is listed as being a ''time and expense'' basis, in which case the rates in Table 2 attached hereto (or as subsequently modified by approved amendments to this Agreement) shall apply.

3.14 Taxes. Any taxes or levies (excluding Federal, State, and local income taxes) which may be assessed against the Engineer for services performed or payments for services performed by the Engineer per this Agreement shall be in addition to the compensation set forth in the attachments to this Agreement. Such taxes or levies when paid by the Engineer shall be stated separately on all invoices and paid by the Owner.

3.15 Interest. Interest at the rate of _____ percent (_____%) per annum shall be paid by the Owner to the Engineer on any unpaid balance due the Engineer, commencing thirty (30) days after the receipt of the Engineer's invoice, provided that the delay in payment beyond such time shall not have been caused by any conditions within the control of the Engineer. Such interest shall be paid ten (10) days after the amount of interest has been determined by the Engineer and the Owner. The start date of interest accrual is irrespective of the date of the Owner's approval of the invoice, but the interest computation shall be based on the invoice approved by the Owner.

3.16 Non-Assignment. The obligations of the Engineer under this Agreement shall not be assigned without the approval in writing of the Owner and the Administrator.

3.17 Attachments. The following listed attachments, when checked in appropriate boxes, are attached to and made a part of this contract, by this reference:

____ RUS Form 217a—Project Design, Assistance and Coordination;

____ RUS Form 217b—Central Office Equipment Engineering Services;

____ RUS Form 217c—Transmission Facilities Engineering Services;

____ RUS Form 217d—Building Engineering Services;

____ RUS Form 217e—Outside Plant Staking Services;

____ RUS Form 217f—Outside Plant Contract Document Phase Engineering Services; and

____ RUS Form 217g—Outside Plant Construction Phase Engineering Services.

3.18 Service Addition. When a service listed in paragraph 3.17 above is added to this contract after execution, an amendment to the Contract is required.

3.19 Engineering Fee. The Engineer shall provide an initial estimate, monthly updates and a final statement of engineering fees using RUS Form 506, Statement of Engineering Fees, or a facsimile thereof. Where a fixed amount or percentage is used in the attachments checked in section 3.17 above, the same fixed amount or percentage shall be used in the statement of engineering fees.

3.20 Contract Amendment. When the total engineering fee exceeds the initial contract estimate by 20% or more, an amendment to the contract shall be required as set forth in 7 CFR Part 1753.

3.21 Compensation for Corrections. No compensation shall be due or payable to the Engineer, pursuant to this Agreement, for any engineering services performed by the Engineer in connection with effecting of corrections to the design or construction of the Project, when such corrections are required as a direct result of failure by the Engineer to properly fulfill one or more of the Engineer's obligations as set forth in this Agreement.

3.22 Force Majeure. The Engineer shall not be held responsible for Project delays which are a result of Owner delays, Contractor delays or acts of God. The Engineer shall not be entitled to additional compensation unless the delays are the result of the Owner's negligence.

3.23 Contract Beneficiaries. Nothing under this Agreement shall be construed to give any rights or benefits in this Agreement to anyone other than the Owner, the Engineer and the Administrator, and all duties and responsibilities undertaken pursuant to this Agreement shall be for the sole and exclusive benefit of the Owner, Engineer and Administrator and not for the benefit of any other party. This paragraph does not relieve the Engineer of any obligation or responsibilities conferred upon licensed engineers under State law.

3.24 Addenda. Any addenda required for this contract should be placed before Table 1.

3.25 Contract Completion and Closeout. Upon completion of all services covered by this Contract, the Engineer shall execute the Statement of Engineering Fees, RUS Form 506, and submit copies to the Owner as prescribed under 7 CFR 1753 Subpart B.

In witness whereof, the parties hereto have caused this Agreement to be duly executed.

Owner
By _____
President
ATTEST: _____
Secretary

Engineer
By _____
President, Partner (Strike out inapplicable Designation—If partnership, all partners shall sign)
ATTEST: _____
Secretary

Table 1.—Description of Project

[Attach supplemental sheets, as required]

___EXCHANGE

Table 1.—Description of Project—Continued

[Attach supplemental sheets, as required]

MILEAGE OF OUTSIDE PLANT___
EQUIPMENT BUILDING[1]___
CENTRAL OFFICE EQUIPMENT[1]___
ASSOCIATED FACILITIES[2]___
OTHER[3]___
EXCLUDED SERVICES[2]___

[1] Insert ''new'' or ''additional'' or ''none'' as appropriate.
[2] Insert ''none'' or list as appropriate.
[3] Describe.

TABLE 2.—SCHEDULE OF TIME, EXPENSE AND EQUIPMENT USAGE RATES, DATED _____

1. Time Rates. Includes all costs associated with the employees except for those itemized in Paragraph 2, below.

Job Classification and Employee Name, if Known _____

Hourly Billing Rate _____ (Attached supplemental sheet, as required)

2. Expense Rates. These shall include subsistence expense, if any, paid to (or on behalf of) employees; plus reasonable employee transportation costs; plus the cost of printing (including mailing and transportation expenses), telephone, facsimile, and other materials and equipment related to the Project.

3. Test Equipment and Computer Usage Rates. Description of Equipment _____ Hourly Billing Rate _____ (Attached supplemental sheet, as required)

4. Review of Rates. To the extent that the completion date of the Agreement, to which this Table 2 applies, shall extend 12 months beyond the date when this Agreement is originally executed; and on each subsequent anniversary of such Agreement this schedule of rates shall be verified or modified in writing by the Parties, to new rates mutually agreeable to the Parties to such Agreement, until Completion or Termination of such Agreement as provided therein.

5. Information for Owner. With each invoice for payment, the Engineer shall furnish the Owner information of the type outlined in a jointly approved format similar to that shown in Exhibit A.

6. Compensation Payment. Unless otherwise specified in this Agreement, compensation payable pursuant to Table 2 shall be due and payable ten (10) days after approval of the Owner of the service performed and the invoice of the Engineer, including the detail breakdown of the cost by the portion of the Project and section of the contract for which the service was performed. The Engineer shall be notified, within ten (10) days of receipt of invoices, of any discrepancies which require correction or addition as precedent for payment of such invoices by the Owner.

EXHIBIT A

Suggested Information and Format for Time & Expense Billing

Certificate of Time, Expense & Equipment Usage Charges

Project Designation:
Postloan Engineering Contract, RUS Form 217:
Name: _____
Dated: _____
Classification: _____
Invoice period ending: _____
Date _____
Service Performed[1] _____
  Hourly Rate ___
  Number of Hours ___
  Extended Costs ___
Miles Driven ___
  Cost Per Mile ___
  Extended Costs ___
Other Transportation ___
  Air Travel ___
  Other (Explain) ___
  Extended Costs ___
Lodging _____
Subsistence _____
Computer _____
  Rate ___
  Hours ___
  Extended Costs ___
Date: ___
EQUIPMENT RENTAL:
COE Test Equipment _____
  Hourly Rate ___
  Number of Hours ___
  Extended Costs ___
O. P. Test Equipment _____
  Hourly Rate ___
  Number of Hours ___
  Extended Costs ___
Transmission Testing _____
  Hourly Rate ___
  Number of Hours ___
  Extended Costs ___
OTHER EXPENSES:
Telephone Charges _____
Facsimile Charges _____
Printing _____
  Construction Sheets ___
  Maps ___
SUBMITTED (by Engineer): _____
Title _____
Date _____
APPROVED (by Owner): _____
Title _____
Date _____

[1] Service performed to be included by description of activity and by reference to paragraph number in RUS Form 217 Attachment. Example: Pre-Bid Conference: 217c 3 refers to conducting Pre-Bid Conference.

Public reporting burden for this collection of information is estimated to average 30 minutes per response, including the time for reviewing instructions, searching existing data sources, gathering and maintaining the data needed, and completing and reviewing the collection of information. Send comments regarding this burden estimate or any other aspect of this collection of information, including suggestions for reducing this burden, to Department of Agriculture, Clearance Officer, OIRM (OMB #0572-0059), AG Box 7630, Washington, DC 20250; Washington, DC 20503. OMB DOCKET NO. 0572-0056, Expires 09/30/97.

No further benefits may be paid out under this program unless this report is completed and filed as required by existing law and regulations (7 U.S.C. et seq.)

U.S. Department of Agriculture
Rural Utilities Service

STATEMENT OF ENGINEERING FEES
TELECOMMUNICATIONS

INSTRUCTIONS - See 7 CFR Part 1753.17(f)

PROJECT DESIGNATION

CONTRACT NO. | **DATE**

CONTRACT SECTION	ESTIMATED	INVOICED AND APPROVED	FINAL
Form 217a - Project Design, Assistance and Coordination			
A. Section 1. Project Design			
B. Section 2. Assistance to Owner			
C. Section 3. Coordination			
D. Section 4. Plant Records			
Form 217a Subtotal			
Form 217b - Central Office Equipment Engineering Services			
A. Section 1. Review of Requirements			
B. Section 2C. Rebidding			
C. Additions, Modifications, Relocations, or Removals			
D. Sections 2F, 2H and 2I and Section 3			
E. For each new Central Office Equipment contract or Force Account Proposal an amount equal to:			
_____ percent (____%) of first $100,000			
Plus _____ percent (____%) of next $300,000			
Plus _____ percent (____%) of the balance			
F. For each Installation Only contract: _____ percent (____%)			
Form 217b Subtotal			
Form 217c - Transmission Facilities Engineering Services			
A. Section 1. Review of Requirements			
B. Additions, Modifications, Relocations, or Removals			
C. Section 3A. Rebidding			
D. Sections 3E, 3F and 3G			
E. Section 4. Tests			
F. For each new Transmission Facilities contract or Force Account Proposal an amount equal to:			
_____ percent (____%) of first $50,000			
Plus _____ percent (____%) of next $150,000			
Plus _____ percent (____%) of the balance			
G. For each Installation Only contract: _____ percent (____%)			
Form 217c Subtotal			
Form 217d - Building Engineering Services			
A. Section 1. Review of Requirements			
B. Section 3B. Rebidding			
C. Additions, Modifications, Relocations, or Removals			
D. Sections 3F and 3G			
E. For each new Building contract or Force Account Proposal an amount equal to:			
_____ percent (____%) of first $50,000			
Plus _____ percent (____%) of the balance			
Form 217d Subtotal			
Form 217e - Outside Plant Staking Services			
A. Section 1. Review of Requirements			
B. Section 2C. Changes			
C. Section 2I. Joint Use or Joint Occupancy			
D. Replacement of Markers			
E. For Staking:			
1. _____ miles at $ _____ per mile of existing buried plant to be modified			
2. Plus ____ miles at $ _____ per mile of new buried plant			
3. Plus ____ miles at $ _____ per mile of underground cable installed in ducts			
4. Plus ____ miles at $ _____ per mile of new aerial plant			
5. Plus ____ miles at $ _____ per mile of existing aerial plant to be modified			
6. Plus ____ miles at $ _____ per mile of new joint use lines			
7. Plus ____ miles at $ _____ per mile of existing lines to be removed where no construction or modification work is to be performed			
8. Plus ____ service entrances at $_____ per service entrance for each new or modified service entrance			
9. Plus ____ subscribers at $_____ per subscriber shown on construction sheets			
F. Section 2J. Time and Expense Staking			
Form 217e Subtotal			

RUS Form 506 (Rev 12-96)

"You are not required to respond to this collection of information unless this form displays the currently valid OMB control number."

CONTRACT SECTION	ESTIMATED	INVOICED AND APPROVED	FINAL
Form 217f - Outside Plant Contract Document Phase Engineering Services			
A. Sum of $ _____ or _____ Sections at $ _____ per section			
Plus _____ Amendments at $ _____ per amendment			
Plus _____ miles at $ _____ per mile of Project Line			
B. The Sum of $ _____ for each approved Force Account Proposal			
C. Section 2. Map Tracings and Other Data			
D. Section 3. Schematics, Assignments, and Cut Sheets			
E. Section 4B6. Underground Conduit			
F. Section 4C3. Pre-Bid Conference and Rebidding			
G. Section 4D3. Changes to Force Account Proposals			
Form 217f Subtotal			
Form 217g - Outside Plant Construction Phase Engineering Services			
A. Section 1. Construction Phase			
1. Section 1B. Residents and Inspectors			
2. Section 1C. Pre-Construction Conference			
3. Section 1F. Joint Use or Joint Occupancy			
4. Section 1G. Tests			
5. Section 1H. Connecting Companies			
6. Section 1I. Reporting			
7. Section 1J. Final Inspection			
B. Section 2. Final Documents: the sum of $ _____ or _____ Sections at $ _____ per section			
Plus _____ miles at $ _____ per mile of line included			
Plus _____ service entrances at $ _____ for each service entrance installed, replaced or modified			
C. Section 3. Plant Records			
D. Section 4. Inventory and Appraisal			
Form 217g Subtotal			
Form 217 Contract SUBTOTAL			
TAXES			
GRAND TOTAL			

CERTIFICATE OF ENGINEER
(Complete for Final Statement Only)

I, _____, certify that (1) I am the _____ of
(Title)
_____, the Engineer in a contract entered into between the Engineer and the Owner,
(Name of Engineer)
_____, for engineering services in a rural telecommunications Project, which Project
(Name of Owner)
bears the Rural Utilities Service Project designation _____; and that (2) this is a true and correct statement of the fees due under the terms of the engineering service contract; and that (3) all persons employed by the Engineer in connection with the engineering on the Project have been paid in full.

_____
(Signature)

THIS STATEMENT AND CERTIFICATE IS HEREBY APPROVED

_____
(Owner)

_____ *By:* _____
(Date)

RECOMMENDED BY:

_____ _____
(Date) *(RUS General Field Representative)*

APPROVED BY:

_____ _____
(Date) *(Chief, _____ Area, Engineering Branch)*

RUS Form 506 (Rev 12-96)

ATTACHMENT—RUS FORM 217A

Project Design, Assistance and Coordination

Section 1. Project Design.

A. Design. The Project shall be constructed in accordance with the current Loan Design, Project Schedule (if developed), and Borrower's Environmental Report. Such Loan Design shall be based on the latest applicable criteria as specified by the Owner and the Administrator.

When necessary for the preparation of plans and specifications, the Engineer shall, upon request of the Owner and with the approval of the Administrator: (1) Revise as

necessary the Loan Design and Borrower's Environmental Report; (2) prepare or revise as necessary the outside plant design; (3) make measurements and analyses of existing traffic; (4) make tests of existing cable, including the determination of field locations for treatment of existing facilities associated with installation of carrier equipment; and (5) submit the resulting Loan Design and Borrower's Environmental Report to the Owner in a format suitable for approval by the Administrator.

B. Change in Design. If, after the approval of the Loan Design and Borrower's Environmental Report, or plans and specifications by the Owner and the Administrator, it shall be determined by the Owner that any change is required, the Engineer shall prepare such revisions in the Loan Design, Borrower's Environmental Report, and plans and specifications, or any part thereof, as is necessitated by the changes in requirements for service, design criteria, or other reasons arising during the performance of services for the Project.

Section 2. Assistance To Owner. The Engineer, to the extent requested by the Owner, shall assist in the Owner's obtaining agreements and authorizations required for the Project, including without limitation the furnishing of engineering information and drawings and participating in the Owner's obtaining:

A. Toll, EAS, operator assistance, special services and other connecting company commitments;

B. Joint use or joint occupancy agreements with other utilities;

C. Permits for crossing public roads, railroads, navigable streams or bodies of water;

D. Right-of-way authorizations, easements, and other permits necessary for encroachment on public or private lands;

E. Authorizations from regulatory bodies and franchises from public bodies; and

F. Environmental studies and clearances.

Section 3. Coordination. The Engineer, to the extent requested by the Owner, shall coordinate the work of others engaged in the Project, including work performed or supervised by the Owner, architect, and other engineers, to facilitate expeditious and economical completion of the Project. Services pursuant to this section shall be in addition to, and shall not include, services required by other provisions of this Agreement.

Section 4. Plant Records. The Owner shall furnish to the Engineer current and accurate plant records. If such records are not available the Owner may direct the Engineer to update existing records to current status. This may include conversion of existing records to a new medium.

Section 5. Compensation. The Owner shall pay the Engineer for services performed pursuant to this RUS Form 217a the ''time and expense'' compensation as defined in Table 2 of this Agreement.

Section 6. Section Reference. Unless otherwise specified or indicated, any reference to ''section'' shall mean within this attachment (RUS Form 217a—Project Design, Assistance and Coordination).

ATTACHMENT—FORM 217B

Central Office Equipment Engineering Services

Section 1. Review of Requirements. Prior to the preparation of plans and specifications, the Engineer shall review with the Owner the current and future requirements of the Project, in respect to central office equipment additions, replacements, modifications or complete new offices. The Engineer, to the extent requested by the Owner, shall prepare such studies as the Owner may require to support the selection by the Owner of the final design plan.

Section 2. Plans and Specifications and Contracts.

A. Preparation of Plans and Specifications. Plans and specifications shall be prepared by the Engineer in accordance with standard RUS specifications and requirements for central office equipment, and shall be submitted to the Owner in a format suitable for approval by the Administrator.

B. Bidders Qualifications. The Engineer shall review with the Owner all Bidder qualifications and shall prepare and furnish to the qualified bidders the plans and specifications upon the conditions provided in the applicable standard RUS contract forms and in accordance with 7 CFR Part 1753.

C. Bid or Proposal. The Engineer shall be available to each prospective bidder for consultation with respect to the details of the plans and specifications and all other matters pertaining to the preparation of the proposals for the supply of equipment or services therefore. All changes to or clarifications of the plans and specifications provided to one prospective bidder shall be provided by the Engineer in writing to all other prospective bidders and to the Owner.

The Engineer shall attend and supervise all technical prebid review meetings and openings of quotes for the furnishing of equipment or services therefor. Where additions to existing equipment are proposed, a quote may be solicited from the original supplier or separate materials and installation contracts may be requested from several suppliers. The Engineer shall carefully check all quotes received and shall render to the Owner assistance in connection with the Owner's consideration of the quotes received so that contracts may be prudently and properly awarded.

The Engineer shall submit in writing to the Owner recommendations of first and second choice of bidders stating the reasons

therefor, or, if the analysis of quotes indicates that no quote is satisfactory because of prices or other conditions, the Engineer shall recommend to the Owner that all quotes be rejected, giving reasons therefor. Unless otherwise directed by the Owner, the Engineer shall proceed in respect to rebidding in the manner provided for herein for the initial bidding.

D. Award of Contract. The Engineer shall prepare and furnish to the Owner three (3) copies of a detailed tabulation of all the bids or quotes and a tabulation showing the bidders' names and totals. The Owner shall submit to the Administrator the bidding information required for approval of the award of the contract by the Administrator. Upon receipt of notice from the Owner of the Administrator's approval of the award of the contract, the Engineer shall prepare contracts in accordance with 7 CFR Part 1753.

E. Contract Amendments. If, after the equipment contract and the installation contract have been approved by the Owner and the Administrator, it shall be determined by the Owner that any change or changes in the plans and specifications are advisable, the Engineer shall prepare and submit a contract amendment in accordance with 7 CFR Part 1753.

F. Customer Information and Engineering Meeting. If necessary, the Engineer shall arrange, at a mutually agreeable time, a Customer Information and Engineering Meeting with the Owner, Contractor and Engineer to review the Contractor's proposal, equipment lists, software, data requirements, translation requirements, etc. prior to beginning of manufacture.

G. Compliance. The Engineer shall review all equipment lists, manufacturer's drawings, and other data submitted by the Contractor, to determine apparent compliance of such lists, drawings and other data with the approved contract. This shall not relieve the Contractor of its obligation to meet the performance specifications of the contract.

H. Pre-Installation Meeting. The Engineer shall arrange at a mutually agreeable time, a pre-installation meeting between the Contractor, Owner and Engineer, after the Contractor's installer has arrived at the contract site, to clarify areas of responsibility, check scheduling and to determine the Contractor's proposed compliance with the plans and specifications.

I. Progress Reports. A competent representative of the Engineer shall make periodic visits to the equipment installation site to Inspect the progress and quality of the executed work and to determine, in general, if the work is proceeding in accordance with the contract. The Engineer shall report at least monthly to the Owner in writing stating the results of Inspections. When the Engineer observes any failure of the executed work or work in progress to comply with the requirements of the contract, this shall be reported to the Owner immediately. These reports shall include suitable recommendations. If the engineer observes an unsafe practice, his only responsibility shall be to consult immediately with the Contractor and if his concerns are not satisfied, to notify the Owner immediately.

Section 3. Tests. The Engineer shall conduct, or cause to be conducted by the installer, such tests of all such equipment as required by the Owner and the Administrator to determine that the equipment meets the performance requirements of the plans and specifications. The Engineer shall make recommendations for the correction of performance or operational difficulties. All cases of performance or operational difficulties due to faulty installation or defective equipment shall be reported to the Contractor, for correction. When the corrections have been made, the Engineer shall retest the equipment. The Engineer shall furnish test equipment, when required, for all required tests or measurements performed by the Engineer.

The Owner and a representative of the Administrator will normally conduct a final inspection of completed construction. When requested by the Owner, a qualified representative of the Engineer shall be present.

Section 4. Final Documents. The Engineer shall prepare or cause to be prepared, and shall submit to the Owner for approval, in a format suitable for approval by the Administrator, complete and detailed final documents as specified in 7 CFR 1753 and a statement showing the total amounts due the Contractor, pursuant to the terms of the contract, including any amendments thereto. The final documents shall be submitted for the Owner's approval within forty (40) calendar days after the completion of construction based on the date on the certificate of completion covered by each central office equipment contract and each installation contract.

Section 5. Compensation.

A. Time and Expense. The Owner shall pay the Engineer ''time and expense'' compensation as outlined in the current Table 2 of this Agreement for: (1) All services performed pursuant to section 1; (2) ''rebidding'' pursuant to paragraph C of section 2; (3) all services in connection with additions to, replacement of components in, modifications of, or removal of, existing central office equipment; (4) all services pursuant to paragraphs F, H, and I of section 2; and (5) all services pursuant to section 3.

B. Percent of Cost. The Owner shall pay the Engineer for all other services performed pursuant to this RUS Form 217b, including final documents, for each central office equipment contract an amount equal to:

_____ percent (_____ %) of the first one hundred thousand dollars ($100,000); plus _____ percent (_____ %) of the next three hundred thousand dollars ($300,000); plus _____ percent (_____ %) of the balance of the installed cost of such equipment for each complete new central office equipment contract, and for each installation contract an amount equal to _____ % of such installation contract. Ninety percent (90%) of such sums shall be due and payable ten (10) days after approval by the Administrator of each contract (or force account proposal) and the balance of the compensation shall be due and payable ten (10) days after approval by the Owner and the Administrator of a certificate of completion of installation for each such equipment.

''Installed cost'' shall mean the total cost of labor and materials of the central office equipment as shown on the final inventory documents prepared by the Engineer and approved by the Owner and the Administrator. For a materials only contract, ''installed cost'' shall mean the amount for materials shown on the final inventory documents.

Section 6. Section Reference. Unless otherwise specified or indicated, any reference to ''section'' shall mean within this attachment (RUS Form 217b—Central Office Equipment Engineering Services).

ATTACHMENT—RUS FORM 217C

Transmission Facilities Engineering Services

Section 1. Review of Requirements. Prior to the preparation of plans and specifications for transmission facilities the Engineer shall review with the Owner the up-to-date requirements of the Project, as related to transmission facilities.

Section 2. Plans and Specifications. The Engineer shall prepare, and submit to the Owner in a format suitable for approval by the Administrator, the plans and specifications for the purchase and installation of such transmission facilities in sufficient time to allow normal scheduled delivery and installation of such to coordinate with the schedule of completion of the Project.

Section 3. Contracts.

A. Bid or Proposal. The Engineer shall be available to each prospective bidder for consultation with respect to the details of the plans and specifications and all other matters pertaining to the preparation of the proposals for the supply of equipment or services therefor. All changes to or clarifications of the plans and specifications provided to one prospective bidder shall be provided by the engineer in writing to all other prospective bidders and to the Owner.

The Engineer shall attend and supervise all technical prebid review meetings and openings of quotes for the furnishing of equipment or services therefor. Where additions to existing equipment are proposed, a quote may be solicited from the original supplier or separate materials and installation contracts may be requested from several suppliers. The Engineer shall carefully check all quotes received and shall render to the Owner assistance in connection with the Owner's consideration of the quotes received so that contracts may be prudently and properly awarded.

The Engineer shall submit in writing to the Owner recommendations of first and second choice of bidders stating the reasons therefor, or, if the analysis of quotes indicates that no quote is satisfactory because of prices or other conditions, the Engineer shall recommend to the Owner that all quotes be rejected, giving the reasons therefor. Unless otherwise directed by the Owner, the Engineer shall proceed in respect to rebidding in the manner provided for herein for the initial bidding.

B. Award of Contract. Upon receipt of notice from the Owner of the Administrator's approval of the award of any contract, or bid proposal, the Engineer shall prepare and submit contracts in accordance with 7 CFR Part 1753.

C. Contract Amendments. If, after any such contract has been approved by the Owner and the Administrator, it shall be determined by the Owner that any change or changes in the plans and specifications are advisable, the Engineer shall prepare and submit a contract amendment in accordance with 7 CFR Part 1753.

D. Compliance. The Engineer shall review all equipment lists and manufacturer's drawings, and other data submitted by the Contractor, to determine apparent compliance of such lists, drawings and other data with the approved contract. This shall not relieve the Contractor of its obligation to meet the performance specifications of the contract.

E. Pre-Installation Meeting. The Engineer shall arrange, when requested by the Owner, at a mutually agreeable time, a pre-installation meeting between the Contractor, Owner and Engineer to clarify areas of responsibility, check delivery and completion scheduling and to assure that the Contractor comply with the plans and specifications.

F. Customer Information and Engineering Meeting. The Engineer shall arrange, if necessary, at a mutually agreeable time a customer information and engineering meeting with Owner, Contractor and Engineer to review the Contractor's proposal, equipment lists, software, data requirements, translation requirements, etc. prior to beginning of manufacture.

G. Progress Reports. A competent representative of the Engineer shall make periodic visits to the equipment installation site to Inspect the progress and quality of the executed work and to determine, in general, if the work is proceeding in accordance with

the contract. The Engineer shall report at least monthly to the Owner in writing stating the results of Inspections. When the Engineer observes any failure of the executed work or work in progress to comply with the requirements of the contract, this shall be reported to the Owner immediately. These reports shall include suitable recommendations. If the engineer observes an unsafe practice, his only responsibility shall be to consult immediately with the Contractor and if his concerns are not satisfied, to notify the Owner immediately.

Section 4. Tests. The Engineer shall conduct, or cause to be conducted, such tests as required by the Owner and the Administrator to determine that the equipment meets the performance requirements of the plans and specifications. The Engineer shall make recommendations for the correction of performance or operational difficulties. All cases of performance or operational difficulties due to faulty installation or defective equipment shall be reported to the Contractor for correction. When the corrections have been made, the Engineer shall retest the equipment. The Engineer shall furnish test equipment, when required, for all required tests or measurements performed by the Engineer.

The Owner and a representative of the Administrator will normally conduct a final inspection of completed construction. When requested by the Owner, a qualified representative of the Engineer shall be present.

Section 5. Final Documents. The Engineer shall prepare or cause to be prepared, and shall submit to the Owner for approval, in a format suitable for approval by the Administrator, complete and detailed final documents as specified in 7 CFR Part 1753 and a statement showing the total amounts due the Contractor, pursuant to the terms of the contract, including any amendments thereto. The final documents shall be submitted for the Owner's approval within forty (40) calendar days after the completion of construction based on the date on the certificate of completion covered by each transmission facilities contract and each installation contract.

Section 6. Compensation.

A. Time and Expense. The Owner shall pay the Engineer ''time and expense'' compensation as defined in the current Table 2 of this Agreement for: (1) All services performed pursuant to section 1; (2) all services in connection with additions to, replacement or removal of components in, modifications of, relocation of existing systems of transmission facilities; (3) ''rebidding'' pursuant to paragraph A of section 3; (4) all services pursuant to paragraphs E, F, and G of section 3; and (5) all services pursuant to section 4.

B. Percent of Cost. The Owner shall pay the Engineer for all other services pursuant to this RUS Form 217c, including final documents, for each contract or force account proposal for new transmission facilities, an amount equal to: _____ percent (_____ %) of the first fifty thousand dollars ($50,000.00); plus _____ percent (_____ %) of the next one hundred fifty thousand dollars ($150,000.00); plus _____ percent (_____ %) of the balance of the installed cost of each such document and for each installation contract an amount equal to _____ % of such document. Ninety percent (90%) of such sums shall be due and payable ten (10) days after approval by the Owner of the document for the purchase or installation of such equipment. The balance of the compensation shall be due and payable ten (10) days after approval by the Owner and the Administrator of a certificate of completion of installation for such equipment.

''Installed cost'' shall mean the total cost of labor and materials of the transmission facilities as shown on the final documents prepared by the Engineer and approved by the Owner and the Administrator. For a material's only contract, ''installed cost'' shall mean the amount for materials shown on the final inventory documents.

Section 7. Section Reference. Unless otherwise specified or indicated, any reference to ''section'' shall mean within this attachment (RUS Form 217c—Transmission Facilities Engineering Services).

ATTACHMENT—RUS FORM 217D

Building Engineering Services

Section 1. Review of Requirements. Prior to the preparation of plans and specifications, the Engineer shall review with the Owner the current and future requirements for buildings to be constructed as a part of the Project.

Section 2. Plans and Specifications. The plans and specifications for the construction of buildings shall be prepared in sufficient time to allow normal completion of construction of the buildings at least thirty (30) days prior to delivery of central office equipment as specified in the central office equipment contract. The plans and specifications shall, unless otherwise directed by the Owner, be prepared in accordance with standard RUS specifications and construction drawings relating thereto. Additionally, the plans and specifications shall include such details as the characteristics of the building site(s) may require, including, without limitation, a plot plan and description of site development work, if any. The plans and specifications shall be submitted to the Owner in a format suitable for approval by the Administrator.

Section 3. Contracts

A. Bidder's Qualifications. After approval of the plans and specifications by the Owner

and Administrator, notices shall be sent to prospective bidders in accordance with 7 CFR Part 1753. The names of those so notified shall be forwarded to the Owner at the time such notices are sent. The Engineer shall review with the Owner and the Owner shall approve the qualifications of all prospective bidders. The Engineer shall prepare and furnish to qualified contractors requesting them, the plans and specifications upon the conditions provided in the applicable standard RUS contract forms.

B. Proposals. The Engineer shall be available to each prospective bidder for consultation with respect to the details of the plans and specifications and all other matters pertaining to the preparation of the proposals for the construction of the building(s) or the supply of materials and equipment or services therefor. All changes to or clarifications of the plans and specifications provided to one prospective bidder shall be provided in writing to all other prospective bidders and to the Owner.

The Owner shall return unopened the bids received from bidders not specifically qualified to bid the plans and specifications.

The Engineer shall attend and supervise all openings of bids for the construction of the building(s) or for the furnishing of materials and equipment or services therefor. In the event that less than three (3) bids are received from qualified bidders, the bids shall remain unopened and the Engineer shall notify the Administrator thereof immediately. Unless otherwise directed by the Owner, the Engineer shall proceed, in respect of the rebidding, in the manner provided for herein for the initial bidding. The Engineer shall carefully check all bids received and shall render to the Owner all such assistance as shall be required in connection with consideration of the bids received so that contracts may be prudently and properly awarded.

The Engineer shall submit in writing to the Owner recommendations of first, second and third choice of bidders, stating the reasons therefor, or if the analysis of bids indicates that no bid is satisfactory because of prices or other conditions, the engineer shall recommend to the Owner that all bids be rejected, giving the reasons therefor.

C. Award of Contract. The Engineer shall prepare and furnish to the Owner three (3) copies of a detailed tabulation of all the bids and a tabulation showing the bidders' names and totals of all bids. The Owner shall submit to the Administrator the bidding information required for approval of the award of the contract by the Administrator. Upon receipt of notice from the Owner of the Administrator's approval of the award of the contract, the Engineer shall prepare contracts in accordance with 7 CFR Part 1753.

D. Contract Amendments. If, after the contract has been approved by the Administrator it shall be determined by the Owner that any change or changes in the plans and specifications are advisable, the Engineer shall prepare and submit a contract amendment in accordance with 7 CFR Part 1753.

E. Compliance. The Engineer shall review all shop and manufacturer's drawings, construction detail variations, and other data submitted by the Contractor, to determine apparent compliance of such lists, drawings and other data with the approved contract. This shall not relieve the Contractor of its obligation to comply with the plans and specifications.

F. Progress Reports. A competent representative of the Engineer shall make periodic visits to the construction site to Inspect the progress and quality of the executed work and to determine, in general, if the work is proceeding in accordance with the contract. The Engineer shall report at least monthly to the Owner in writing stating the results of Inspections. When the Engineer observes any failure of the executed work or work in progress to comply with the requirements of the contract, this shall be reported to the Owner immediately. These reports shall include suitable recommendations. If the engineer observes an unsafe practice, his only responsibility shall be to consult immediately with the Contractor and if his concerns are not satisfied, to notify the Owner immediately.

G. Final Inspection. The Owner and a representative of the Administrator will normally conduct a final inspection of completed construction. When requested by the Owner, a qualified representative of the Engineer shall be present.

Section 4. Final Documents. The Engineer shall prepare, and shall submit to the Owner in a format suitable for approval by the Administrator, complete and detailed final documents as specified in 7 CFR 1753 and a statement showing the total amounts due the Contractor pursuant to the terms of the construction contract, including any approved amendments thereto. The final documents shall be submitted for the Owner's approval within sixty (60) calendar days after the completion of construction based on the date shown on the certificate of completion covered by each contract.

Section 5. Compensation

A. Time and Expense. The Owner shall pay the Engineer ''time and expense'' compensation as defined in the current Table 2 of this Agreement for: (1) all services performed pursuant to section 1; (2) services performed for rebidding pursuant to paragraph B of section 3; (3) all services in connection with additions to or modifications of existing buildings; and (4) inspection of construction pursuant to paragraphs F and G of section 3.

B. Percent of Cost. The Owner shall pay the Engineer for all other services performed pursuant to this RUS Form 217d, including

final documents, for each new building contract included in the Project an amount equal to: _____ percent (_____%) of the first fifty thousand dollars ($50,000.00); plus _____ percent (_____%) of the balance of the cost of construction thereof, of which sums ninety percent (90%) shall be due and payable ten (10) days after approval by the Administrator of a contract (or force account proposal) for the construction of the buildings; and the balance of the compensation shall be due and payable ten (10) days after approval by the Owner and the Administrator of a certificate of completion of construction for all such buildings included in the Project (or in a completed section of the Project).

''Cost of construction'' shall mean the total cost of labor and materials (including Owner-furnished materials and labor) used in the construction of such buildings as shown on the final documents prepared by the Engineer and approved by the Owner and Administrator.

Section 6. Section Reference. Unless otherwise specified or indicated, any reference to ''section'' shall mean within this attachment (RUS Form 217d—Building Plans and Specifications and Contracts).

ATTACHMENT—RUS FORM 217E

Outside Plant Staking Services

Section 1. Review of Requirements. Prior to the commencement of Staking, the Engineer shall review with the Owner the current requirements of the Project with respect to outside plant and service entrance Staking. At this review, decisions shall be reached concerning public and private rights-of-way, nominal width of construction corridors, and design status.

Section 2. Staking Requirements

A. General

1. Staking for aerial plant shall include locating the proposed line and marking all new pole and other locations as necessary to construct the facilities.

2. Staking for buried plant shall include locating the proposed facilities indicating all pertinent construction information including details of the construction corridor.

3. Staking for underground plant shall include locating conduit systems, construction corridors, marking manhole sites and detailing all other pertinent information.

4. Staking for service entrances shall include locating protectors on the structure, the routing of aerial or buried entrances and the placement of markers, if required, to indicate construction information.

B. Commencement. The Engineer, with the approval of the Owner, shall determine when Staking of the Project shall begin. The Engineer shall not commence Staking in any area of the Project until the Owner has:

1. Either (a) stated in writing that right-of-way authorizations and easements reasonably required therefor have been procured, or (b) directed the Engineer in writing to perform right-of-way procurement under section 2, paragraph D, of RUS Form 217a—Project Design, Assistance, and Coordination;

2. Identified to the Engineer, by map locations, which line segments shall be staked on public right-of-way and which line segments shall be staked on privately owned right-of-way; and

3. Provided information to the Engineer pertaining to limitations on width of construction corridors for each such line segment.

The Owner shall review with the Engineer, and shall inform the Engineer, which specific lines are to be staked. The Owner shall furnish to the Engineer a current list of all existing and potential subscribers by map location and grade of service for whom service is to be furnished. When requested by the Engineer, the Owner shall also furnish the telephone numbers of the existing subscribers. In determining when to proceed with Staking, farming operations and other relevant conditions shall be taken into consideration so as to minimize the need for restaking. The Owner, when requested by the Engineer, shall furnish a qualified person to accompany each Staking crew for the purpose of negotiating with landowners or tenants with respect to such right-of-way authorizations and easements, widths of construction corridors, and locations of proposed facilities.

C. Changes

1. If, during the progress of Staking by the Engineer, the Owner shall change the routing or location of a particular line segment, the Owner shall as early as practicable, notify the Engineer in writing of such changes. Upon such notice the Engineer shall duly note such change and instruct the Staking crews accordingly. The same procedure shall be followed for changes made in type or quantity of facilities during the Staking phase of the Project.

2. If during the process of Staking, the Engineer determines that the routing of facilities along the right-of-way designated by the Owner would result in high costs of placement due to obstacles, inadequate construction corridors, or other circumstances, the Engineer shall notify the Owner and recommend alternative routing. If alternative routing is approved by the Owner and right-of-way can be obtained, the Engineer shall arrange to stake the facilities along the alternate route.

D. Time of Staking

1. The Engineer shall proceed diligently with Staking and continue therewith in such

a manner that, prior to the release of plans and specifications to bidders, the Staking of all outside plant facilities except service entrances shall be complete in order that the plans and specifications shall be complete and accurate.

2. If service entrances are included in the construction contract, Staking of the service entrances shall be completed prior to beginning of construction in a Work Sector. If such Staking is being performed by the Owner, the Engineer shall keep the Owner advised of the status of construction and the Owner shall do the Staking in a timely manner.

3. The Engineer shall perform all restaking made necessary by changes discussed under paragraph C of section 2, above, as necessary to minimize delays in construction.

E. Manner of Staking. The Staking shall be done in a thorough and workmanlike manner such that construction can be completed in accordance with the latest revision of the National Electrical Safety Code, National Electric Code, local and State laws, rules, regulations and orders of regulatory bodies having jurisdiction; and the Loan Design, Borrower's Environmental Report, and specifications approved by the Owner and the Administrator. The Engineer shall in no case stake lines other than those shown in the approved Loan Design except for minor re-routing and minor changes dictated by field conditions, unless such change shall have been previously approved by the Owner and the Administrator. The Engineer shall replace all markers lost or removed prior to or during construction of the Project. All costs, including costs of markers, equipment, and other materials used in connection with the Staking, shall be borne by the Engineer. All markers and existing poles shall be properly identified with corresponding listing on the construction sheets. Where it is probable that the Contractor or the Owner will have difficulty in locating markers, the Engineer shall provide some other suitable means to identify the location. When Staking service entrances, the Engineer shall give due consideration to the location of the station protector (or network interface device if it incorporates a station protector) in relation to the availability of adequate grounding and the length of the service drop and station wiring.

F. Construction Sheets. The Engineer shall prepare or maintain construction sheets in such standard form as the Owner shall require (and as hereinafter described) to: Serve as the means by which directions are given for the construction of the Project; serve as the permanent plant record by the Owner's facilities as built; and identify adequately the geographical location of the facilities, including non-standard construction corridors and cable placement locations. The Engineer shall enter thereon all pertinent and useful design, specifications and data governing the construction of the Project, including, without limitations:

1. Detailed instructions on the point of attachment of the Owner's facilities on existing pole lines employed in joint use with others;

2. Non-standard depths for installing buried and underground facilities;

3. The presence, but not location of, buried facilities of other utilities when known;

4. The presence of rock when known;

5. Vegetation clearing requirements; and

6. Surface type and surface features of terrain if appropriate.

Copies of construction sheets shall be made available for sale to all prospective bidders in advance of the pre-bid conference. For contract construction five counterparts of the construction sheets shall be supplied by the Engineer to the Contractor for construction use and two copies shall be supplied to the Owner. For force account construction three copies of the construction sheets shall be supplied to the Owner. When revisions in Staking are necessary, the Engineer shall issue copies of the revised construction sheets.

G. Resident. A Resident, with full authority to act for the Engineer per this attachment, shall be maintained by the Engineer at the site of the Project at all times when Staking or other services required under this attachment are being performed at the site of this Project. The Resident may also be engaged in Staking as well as in supervising the Staking activities of other Staking crews of the Engineer. The Engineer shall establish and maintain, in the proximity of the Project, a field office with telephone service at all times when Staking or other services required under this RUS Form 217e are in progress.

H. Reporting. The Engineer shall prepare, execute, and submit to the Owner _____ (insert frequency of reporting—minimal monthly) all estimates, certificates, reports and other documents required to be executed by the Engineer pursuant to the loan contract.

I. Joint Use or Joint Occupancy. In connection with Staking of joint use or joint occupancy facilities the Engineer shall:

1. Prepare and submit to the Owner for approval, detailed information on pole changes, additional poles, and other changes or additions required in existing facilities of other parties to joint use or joint occupancy agreements to accommodate the Owner's facilities; and

2. Coordinate engineering activities under direction of the Owner with other parties to joint use or joint occupancy agreements.

J. The Engineer with the approval of the Owner shall have the option of performing staking on the project under the circumstances described below on a time and

expense basis consistent with Table 2 of this Agreement.

1. Less than 10 miles of buried or aerial plant,

2. Emergency restoral of service, or

3. Natural disasters.

Section 3. Compensation. The Owner shall pay the Engineer for services performed pursuant to this RUS Form 217e as follows:

A. Staking Fee. For all services in connection with the Staking of the Project lines provided for in the approved Project design, including lines which, pursuant to the direction of the Owner, with the approval of the Administrator, shall not be constructed, and for all other services outlined in this RUS Form 217e (except as provided in paragraph C of section 3):

1. The sum of _____ dollars ($_____) per mile of existing buried plant Project lines to be modified; plus

2. The sum of _____ dollars ($_____) per mile of new buried plant Project lines; plus

3. The sum of _____ dollars ($_____) per mile of underground cable to be installed in ducts; plus

4. The sum of _____ dollars ($_____) per mile of new aerial Project lines; plus

5. The sum of _____ dollars ($_____) per mile of existing aerial Project lines to be modified; plus

6. The sum of _____ dollars ($_____) per mile of new joint use or joint occupancy Project lines; plus

7. The sum of _____ dollars ($_____) per mile of existing Project lines to be removed where no construction or modification work is to be performed; plus

8. The sum of _____ dollars ($_____) for each new service entrance staked and for which a construction sheet is prepared and each existing service drop to be modified as part of the Project; plus

9. The sum of _____ dollars ($_____) for each subscriber shown on the construction sheets.

For purposes of this section ''modified'' means rearrangements, additions, change of pair assignments, etc., which require preparation of construction sheets to implement.

The length of the Project lines shall be determined by taking the sum of all distances between terminal points for underground cable and buried cable or conductor, and new service entrances added as part of the Project and all distances between pole markers or from center to center of poles carrying aerial conductor or cable, including joint use or joint occupancy poles, plus the vertical distances parallel to vertical cable runs for aerial cable installations.

B. Time and Expenses. The Owner shall pay the Engineer ''time and expense'' compensation as defined in the current Table 2 of this Agreement for all services performed in this RUS Form 217e in connection with: section 1; paragraph C of section 2; paragraph I of section 2; paragraph J of section 2; and for the replacement of markers made necessary by causes beyond the control of the Engineer.

C. Payments. Compensation under paragraph A of this section 3 shall be due and payable ten (10) days after delivery to the Owner, on a monthly basis, a copy of the construction sheets representing the Staking completed during that month and a recapitulation of the mileage of the various types of line covered by such construction sheets and by previous construction sheets for which compensation has been requested.

The Staking shall be subject to review and inspection by the Owner and the Administrator. The Engineer, when notified to do so by the Owner or the Administrator, shall correct such Staking as the review and inspection may indicate to be necessary. Such review and payments shall not constitute unqualified approval of the Staking. Where restaking is required for reasons within the control of the Engineer, no additional compensation shall be payable.

The compensation payable for lines actually constructed, shall be adjusted to the number of units actually constructed or actually completed as part of the construction of the Project, as reflected in the final documents. Compensation payable for lines which have been staked, but which shall not be constructed, shall be determined from the construction sheets as covered by line abandonment order.

D. Plant Retained in Place. Compensation under this section, for Staking existing Project lines on which modification work is to be performed, shall include compensation for the designation of assembly units of existing plant to be retained in place, and shown on the construction sheets.

Section 4. Section Reference. Unless otherwise specified or indicated, any reference to ''section'' shall mean within this attachment (RUS Form 217e—Outside Plant Staking Services).

ATTACHMENT—RUS FORM 217F

Outside Plant Contract Document Phase Engineering Services

Section 1. Review of Requirements. The Engineer shall use the Loan Design and other information furnished by the Owner under this Agreement as the basis for the preparation of the plans and specifications. Prior to the beginning of the preparation of the plans and specifications, the Engineer shall review with the Owner all data furnished to determine the most recent requirements for facilities to be included in the plans and specifications.

Section 2. Map Tracings and Other Data. Prior to and during the preparation of the plans and specifications by the Engineer, the Owner, if it has not previously done so by

other provisions of this Agreement, shall furnish any of the following items needed by the Engineer:

A. Up-to-date tracings of the detail and town maps of the area of the proposed system on which the Loan Design was based and which show the existing system, and a tracing of the key map when a key map is required by the Owner;

B. Up-to-date cable schematics (cable plant layout), and construction sheets showing the existing system construction;

C. Up-to-date line and station data on existing subscribers;

D. The Loan Design and Borrower's Environmental Report on which the loan was based;

E. Current information as to the location and extent of electric and other lines available for joint use, together with conformed copies of all existing joint use or joint occupancy agreements covering such lines;

F. Current listing of existing, signed, and potential subscribers by map location and grade of service to be considered in the preparation of the plans and specifications. The list of existing subscribers shall be properly referenced to the line and station data;

G. Detailed lists of materials on hand, or on order, which are to be furnished by the Owner in the construction of the Project, together with the quantity and value of each item of such materials; and

H. A written statement setting forth the scope of plans and specifications and the sequence in which the construction shall be performed and whether service entrances are to be included in the plans and specifications.

The map tracings, schematics, and construction sheets are to be of suitable material capable of allowing corrections to be made of the information shown thereon and capable of being reproduced.

Section 3. Schematics, Assignments, and Cut Sheets

A. Cable Schematics. The Engineer shall prepare cable schematics in such form as the Owner shall require to: (a) serve as a means by which directions are given for connecting feeder cable and distribution cable pairs, cross-connection terminals, connecting load coils, and such other directions as may be necessary for properly splicing the feeder cables, distribution cables and other facilities being installed; (b) serve as the permanent circuit assignment record of the Owner's cable and wire facilities; and (c) adequately identify the physical location of all equipment, devices and connections other than services, associated with the pairs of such feeder cable and distribution cable facilities.

B. Circuit and Number Assignments. If requested by the Owner, the Engineer shall prepare telephone number assignments and shall identify the circuit to which the service is to be connected for station installations, including without limitation such information with respect to central office equipment connections as may be required.

C. Cut Sheets. Where modification of existing lines is to be performed, the Engineer shall furnish in such form as the Owner shall require complete and detailed information, collectively known as ''Cut Sheets'' for: (a) Making such changes in circuit connections in the existing outside plant as may be required, including without limitation all associated devices such as load coils, terminals, and temporary connections; (b) making such changes in telephone number assignments and service connections as may be required, including without limitations, the corresponding connection changes required at the central office end; and (c) designating the sequence to be followed in making such changes.

Section 4. Outside Plant Plans and Specifications and Contracts

A. Plans and Specifications. The Engineer shall, to the extent not previously prepared under other provisions of this Agreement, prepare and review with the Owner complete and detailed plans and specifications, drawings, maps and other documents required for the construction of the outside plant facilities to be included as a part of the Project. During the preparation of the plans and specifications, the Engineer shall make such changes in the plans and specifications as may be reasonably required by the Owner as a condition of approval by the Owner and Administrator.

B. Content of Plans and Specifications. The plans and specifications for outside plant shall be prepared in sufficient time to allow normal completion of construction of the outside plant to coincide with the established service dates and shall include the following:

1. One copy of the key map of the system, when a tracing is furnished by the Owner.

2. One copy (or more if necessary for clarity) of the central office area detail maps (sometimes referred to as exchange detail maps) and town maps of the system, on which there shall be indicated the following:

a. Location of lines to be constructed, indicating joint use or joint occupancy lines;

b. Location of switching centers and pair-gain devices;

c. Location of existing lines included as part of the proposed system and modification of such lines;

d. Location of existing lines to be retired;

e. Locations other than service entrances, where right-of-way has not been obtained;

f. Work Sectors indicating sequence of construction;

3. Complete drawings of each type of non-standard RUS unit covering the construction and the materials to be used.

4. An estimate of quantities of the various units of construction.

5. A complete cable plant layout and cable schematics, when applicable, for each central office area as prepared pursuant to paragraph A of section 3.

6. If the Project contains requirements for installation of underground conduit, manholes and associated appurtenances, the Engineer, during the preparation of the plans and specifications, shall secure field data necessary for the proper design of such facilities (including plan and profile data, if required, and detail construction drawings, including cable to be installed), and shall proceed with the preparation of detailed plans and specifications for the construction of such facilities. Such drawings and specifications, when completed, shall be added to, and made a part of, the construction plans and specifications.

7. An itemized list of materials on hand or on order to be furnished by the Owner, showing the locations of delivery points and delivery schedules of such materials, the quantity, unit price and extended price.

8. The form of the contract to be entered into between a Contractor and the Owner for the construction of the outside plant, including forms of notice and instructions to bidders, Contractor's proposal, materials and construction specifications, Contractor's bond, description of assembly units and construction drawings.

NOTE: Plans and specifications for outside plant facilities to be constructed under a force account proposal do not require Items 7 and 8, above.

C. Contracts

1. Upon receipt of notice by the Engineer from the Owner of the Administrator's approval of the plans and specifications, the Engineer shall, unless otherwise instructed by the Owner, with the approval of the Administrator, proceed to take all usual and customary actions, including compliance with the procedures set forth herein and in 7 CFR Part 1753, to facilitate full, free, and competitive bidding for the award of contracts.

2. Notices to Bidders shall be sent in accordance with Subpart F of 7 CFR Part 1753. The Engineer shall then review with the Owner and the Owner shall approve the qualifications of bidders who replied to the notice, as a condition of release of bid documents to any such bidder. The Engineer shall prepare and furnish to such qualified bidders the appropriate bid documents including construction sheets, and the plans and specifications upon the conditions provided in the applicable standard RUS contract forms. The construction sheets shall be furnished upon payment of reasonable charges. The Engineer shall also prepare and furnish, upon payment of reasonable charges, to material suppliers requesting them, copies of the Contractor's proposal sheets for outside plant together with any special drawings or material specifications pertaining thereto and a list of materials to be furnished by the Owner.

3. The Engineer shall conduct a Pre-Bid Conference in accordance with Subpart F of 7 CFR Part 1753 and shall be available to each prospective bidder for consultation with respect to the details of the plans and specifications and all other matters pertaining to the preparation of the proposals for the construction, or the supply of materials and equipment or services therefor. All changes to or clarifications of the plans and specifications provided to one prospective bidder shall be provided in writing to all other prospective bidders and to the Owner.

4. The Engineer shall attend and supervise all openings of bids for the construction, or for the furnishing of materials and equipment or services therefor. The Owner shall return unopened bids received from Bidders not previously qualified under paragraph C2 of this section. In the event that bids are received from less than three (3) qualified bidders, the bids shall remain unopened and the Owner shall notify the Administrator thereof immediately. If directed by the Owner, the Engineer shall proceed in respect of the rebidding, in the manner provided for herein for the initial bidding. The Engineer shall check the assembly unit prices and summarize of all bids received. The Engineer shall render to the Owner assistance in connection with the Owner's consideration of the bids received so that contracts may be prudently and properly awarded. The Engineer shall submit to the Owner a written recommendation for award of the contract or rejection of all bids stating the reasons therefor.

5. The Engineer shall prepare and furnish to the Owner three (3) copies of the detailed proposal sheets or a detailed tabulation of the low bid, and a tabulation showing the names and totals of all bids. The Owner shall submit to the Administrator the bidding information for approval by the Administrator of the award of the contract. Upon receipt of notice from the Owner of the Administrator's approval of the award of the contract, the Engineer shall prepare three (3) counterparts of the construction contract to be executed by the Owner and the successful bidder and the Owner shall forward such executed counterparts to the Administrator for approval.

6. If, after the construction contract has been approved by the Owner and the Administrator, it shall be determined by the Owner that any changes in the plans and specifications are advisable, the Engineer shall prepare and submit a contract amendment in accordance with 7 CFR Part 1753.

D. Force Account

1. If all or a portion of the Project, shall be constructed by force account, the Engineer shall prepare a force account proposal in accordance with Subpart G of 7 CFR Part 1753.

a. When requested by the Owner, the Engineer shall prepare an itemized list of the total quantities of all items of materials required for the construction showing in addition the quantity of each item of materials the Owner has on hand based on the list furnished by the Owner pursuant to paragraph G of section 2.

b. The force account proposal shall include an estimate, prepared in collaboration with the Owner, of the unit construction costs in substantially the same form as the Contractor's proposal in the standard contract form, and a summary of the total estimated cost of construction, setting forth the following:

(1) The total Cost of labor and other;

(2) The total Cost of materials; and

(3) The number of calendar days required for the construction.

2. After receipt of notice by the Engineer from the Owner of approval by the Administrator of the force account proposal, the Engineer, in collaboration with the Owner, shall fix a date for the commencement of construction. In the determination of this date, consideration shall be given to the status of material deliveries, Staking, easements, and the availability of competent construction personnel and adequate equipment to facilitate continuous construction in an efficient and expeditious manner. Such date as agreed upon shall be submitted to the Administrator by the Owner and the date thus established shall be the ''Commencement Date'' for the construction. The Engineer shall be available to the Owner for consultation with respect to the details of the plans and specifications and all other matters pertaining to the construction of the Project.

3. If, after the force account proposal has been approved by the Owner and the Administrator, it shall be determined by the Owner that any change or changes in the force account proposal are advisable, the Engineer shall prepare and submit to the Owner all necessary details in connection with the change or changes, and upon approval thereof by the Owner, the proposed change or changes shall be submitted by the Owner to the Administrator. To the extent that the Administrator approves such proposed change or changes they shall be included as part of the force account proposal, and the Engineer shall immediately proceed in respect of any additional Staking, construction, and material contracts or amendments required thereby in like manner as though such Staking, construction, and material contracts or amendments were originally included as part of the force account proposal.

Section 5. Compensation

A. The Owner shall pay the Engineer for services performed pursuant to this RUS Form 217f (except as provided in paragraph B of this section) as follows:

1. The sum of _____ dollars ($_____) or when the outside plant is divided into sections for construction purposes requiring separate plans and specifications for each section; a sum of _____ dollars ($_____) for each such section for which complete plans and specifications are prepared; plus,

2. The sum of _____ dollars ($_____) for each approved amendment to the contract; plus

3. The sum of _____ dollars ($_____) per mile for each mile of Project line facilities (1) included in the plans and specifications, and (2) added or deleted by approved amendments to the plans and specifications; plus

4. The sum of _____ dollars ($_____) for each approved force account proposal.

The compensation payable under paragraph A of this section shall be due and payable ten (10) days after the approval of the plans and specifications or approved amendments by the Owner and the Administrator.

B. The Owner shall pay the Engineer ''time and expense'' compensation as defined in the current Table 2 of this Agreement for services: (1) As requested by the Owner, in connection with corrections to, or the furnishing of, items required to be furnished by the Owner per section 2; (2) required under section 3; (3) in connection with underground conduits, paragraph B6 of section 4; (4) for changes in force account plans and specifications, paragraph D3 of section 4; and (5) in connection with the conducting of the Pre-Bid Conference, paragraph C3 of section 4, and for rebidding, paragraph C4 of section 4.

Section 6. Section Reference. Unless otherwise specified or indicated, any reference to ''section'' shall mean within this attachment (RUS Form 217f—Outside Plant Plans and Specifications and Contracts).

ATTACHMENT—RUS FORM 217G

Outside Plant Construction Phase Engineering Services

Section 1. Construction Phase

A. General. As engineering representative of the Owner, and in accordance with sound and accepted engineering practices, the Engineer: (1) Shall provide Construction Administration and Inspection services; (2) shall assist the Owner in obtaining the expeditious and economical construction of the Project in accordance with the approved plans and specifications, the terms of the construction contract or force account proposal, and 7 CFR Part 1753; and (3) shall have and exercise sole responsibility for the issuance of supplemental directives to the

Contractor regarding the Contractor's performance in accordance with the terms of the construction contract as approved by the Owner and the Administrator. The Engineer's undertaking hereunder shall not relieve the Contractor of the Contractor's obligation to perform the work in conformity with the plans and specifications and in a workmanlike manner and shall not impose upon the Engineer any obligation to see that the work is performed in a safe manner. The Engineer shall not be responsible for the failure of the Contractor to perform the work in accordance with the contract or to perform the work in a safe workmanlike manner. In fulfilling the above responsibility, the Engineer shall as necessary:

1. Interpret the plans and specifications and convey such interpretation to the Contractor;

2. Inspect the progress of and quality of construction, in sufficient detail to provide reasonable assurance to the Owner of the adequacy of such progress and quality of construction, pursuant to the requirements of the plans and specifications and contract;

3. Confirm the acceptability of materials and equipment proposed by the Contractor to be utilized in the construction prior to the use of such materials or equipment on the Project and promptly reject materials and equipment not in compliance with the plans and specifications; and

4. Inspect the manner of incorporation of the materials and equipment into the Project, and the workmanship with which such materials and equipment are incorporated and reject materials, equipment and workmanship which the Engineer determines will not be in compliance with the plans and specifications. Such Inspection shall be deemed to be adequate if a reasonable percentage of all routine construction units (other than units requiring detailed inspection) are observed at the time of installation and found free of error.

The above enumeration of specific requirements shall not limit the general undertakings of the Engineer to perform services set forth in the first sentence of paragraph A of this section. The obligations of the Engineer hereunder are for the benefit of only the Owner and the Administrator, and shall not relieve the Contractor of any of its own responsibilities under its contract with the Owner.

B. Residents and Inspectors

1. A Resident with full authority to act for the Engineer shall be maintained by the Engineer at the site of the Project at all times during the entire period of scheduled construction (including times when the Resident is available and through no fault of the Engineer scheduled construction is not performed, and including times when corrective work is being performed) unless specifically directed otherwise by the Owner with the approval of the Administrator. A Resident shall be necessary for each outside plant construction contract.

2. If, at any time during construction, a Resident, or Inspector, is not required at the Project site, or such personnel are not available because of other responsibilities on the Project, the Engineer shall assign a Resident and/or Inspector on an intermittent basis, to effect necessary observations of construction during any critical phase of such construction.

3. If the Engineer determines that particular components of the work or particular circumstances during construction require the presence of a specialized representative of the Engineer, such as an architect, structural engineer, design engineer or other specialist for the purpose of interpreting contract requirements, or performing special inspections or tests to facilitate compliance by the Contractor with the plans and specifications and terms of the construction contract, the Engineer with prior approval of the Owner shall assign such personnel to the Project site.

4. The Engineer shall maintain at the site of the Project and under the direct supervision of the Resident a sufficient number of qualified Inspectors, to fully discharge the responsibility of the Engineer pursuant to paragraph A of this section (including times when such assigned Inspectors are available and through no fault of the Engineer scheduled construction is not performed). The number of Inspectors so required will vary with the size of the Project, the number of construction crews, and the speed of construction.

5. The number of Residents and Inspectors required by the Engineer for a routine construction schedule for this Project to effect completion within the allowed number of scheduled ''working days'' is as follows:

a. _____ (_____) Resident(s);

b. _____ (_____) Inspectors(s);

6. In the event conditions should arise, through no fault of and beyond control of the Engineer, which would require the placement by the Engineer of additional Inspectors (or Residents) on the Project, to accommodate special needs of the Owner (or Contractor, with approval of the Owner), then, with the approval of the Owner prior to their assignment to the Project, the Engineer shall assign such additional qualified personnel to the Project for the limited time of such requirements.

C. Pre-Construction Conference. A competent representative from the office of the Engineer, and the Resident (or Residents) to be assigned to the Project, shall conduct the outside plant pre-construction conference. The detailed notes taken by the Engineer on

items discussed shall be furnished to all parties. Such notes shall be used by the Resident, as applicable, in interpreting the plans and specifications pursuant to paragraph A1 of this section.

D. Project Office. The Engineer shall establish and maintain a field office, with telephone service, in the proximity of the Project when construction is in progress and shall notify the Owner of the address and telephone number of such field office. Any notices, instructions or communications delivered to such field office shall be deemed to have been delivered to the Engineer.

E. Defective Construction. If the construction is by contract, the Engineer shall notify the Contractor in writing of all observed or otherwise determined defects in workmanship or materials in accordance with the terms of the construction contract. If the construction is by force account, the Engineer shall advise the Owner relative to the correction of such defects.

F. Joint Use or Joint Occupancy. In connection with all joint use or joint occupancy construction, the Engineer shall:

1. Coordinate construction activities for the Owner with the designated representative of other parties to joint use or joint occupancy agreements;

2. Review for the Owner all changes proposed by other parties to joint use or joint occupancy agreements for changes in and additions to their existing pole lines under such agreements and submit to the Owner recommendations thereon.

G. Tests. The Engineer shall conduct, or cause to be conducted, such tests of circuits and equipment as required by the Owner and the Administrator to determine compliance with the performance requirements of the plans and specifications. The Engineer shall make recommendations in writing for the correction of defective materials, workmanship, or equipment. All cases of transmission or operational difficulties due to faulty construction or defective materials or equipment in the Project shall be reported in writing to the Contractor for correction if the construction is by contract or to the Owner if construction is by force account. When the corrections have been made, the circuits and equipment shall again be tested. The Engineer shall furnish test equipment as required for performing all required tests or measurements.

The outside plant tests to be made on this Project are noted in the table below:

Description of Test or Measurements	Test or Measurements		Will perform or participate in performing tests	
	Subscriber Loop Plant	Trunk Plant	Owner	Engineer
C.O. Ground Measurement				X
Copper Shield or Shield/Armor Continuity	X	X		X
Conductor Continuity	X	X		X
Shield or Armor Ground Resistance	X	X		X
Conductor Insulation Resistance	X	X		X
DC Loop Resistance				
DC Loop Resistance Unbalance				
VF Insertion Loss				
Loop Measurements (Loop Checking)				
Two-Person Structural Return Loss				
One-Person Open Circuit Measurements				
Cable Insertion Loss at Carrier Frequency				
Fiber Armor Continuity	X	X		X
Fiber Optic Splice Loss—Field	X	X		X
Fiber Optic Splice Loss—C. O.	X	X		X
End-to End Attenuation	X	X		X
End-to End Fiber Signature	X	X		

As appropriate, complete the table using these symbols:

X—These are standard tests and measurements required on facilities as desired by the owner or required by the Administrator.

*—These tests will not be required if the distribution pairs are not cross-connected to feeder pairs at the time of acceptance testing.

N/A—Not Applicable.

H. Connecting Companies. The Engineer shall coordinate all engineering and construction activities with connecting companies and shall notify the Owner when the Project, or a section thereof, shall be ready to be placed in service. After giving such notice, the Engineer shall, when directed to do so by the Owner, cause the Project, or such section thereof as may be ready, to be placed in service.

I. Reporting. The Engineers shall prepare, execute and submit to the Owner _____ (insert frequency of reporting—minimal monthly) all estimates, certificates, reports, and other documents required to be executed by the Engineer pursuant to a construction contract, a force account proposal, or the 7 CFR

Part 1753. The Engineer shall review and, if satisfactory, recommend for approval each periodic estimate submitted by contractors prior to approval and payment by the Owner. Such recommendations shall include a statement by the Engineer based on the Engineer's Inspection of executed work and the progress of the work and subject to evaluation and testing of the work as a completed Project, that all construction for which payment is requested has been completed and cleaned up in accordance with the terms of the construction contract and that all defective construction of which the Contractor shall have received fifteen (15) or more days written notice, has been corrected.

The Engineer shall maintain a cumulative inventory of all units of construction incorporated in the Project, showing unit prices and extended totals, for all such units of construction. When it appears that the previously approved contract total is likely to be exceeded, the Engineer shall immediately notify the Owner in a format suitable for notifying the Administrator. When requested by the Owner or when the ''Overrun'' results in 20% above the contract total, the Engineer shall prepare a contract amendment in accordance with 7 CFR Part 1753 for execution by the Parties to the construction contract, to cover the additions or changes in construction units that are resulting in such ''Overrun''.

J. Final Inspection. The Owner and a representative of the Administrator will normally conduct a final inspection of completed construction. When requested by the Owner, a qualified representative of the Engineer shall be present.

Section 2. Final Documents

A. Contract Construction. If the Project or any portion thereof shall be constructed pursuant to a construction contract, the Engineer shall prepare and submit to the Owner complete and detailed final documents as specified in 7 CFR 1753 and a statement of all amounts payable by the Owner under the construction contract. The final documents shall be in a format suitable for approval by the Owner and subsequent submission to the Administrator for approval. These final documents shall be submitted to the Owner within forty-five (45) calendar days after the completion of construction based on the date shown on the certificate of completion covered by each contract.

B. Force Account Construction. If the Project or any portion thereof shall be constructed by force account:

1. Within thirty (30) calendar days after completion of construction of the Project, the Owner shall furnish to the Engineer the following data:

a. The cost of all materials used in construction of the Project;

b. Cost of right-of-way clearing (direct labor costs);

c. All direct labor costs chargeable to construction exclusive of the right-of-way clearing; and

d. A list of all items of overhead cost applicable to the construction of the Project, but excluding the cost of engineering, legal, accounting and other professional services, interest during construction and preliminary survey charges.

2. Within forty-five (45) calendar days after the completion of construction of the Project, the engineer shall prepare and submit to the Owner for approval complete and detailed final documents in such form as the Administrator may prescribe, including without limitation, a final inventory of construction and a final inventory of retirements. The final documents shall contain the labor and material unit costs based on data supplied by the Owner.

C. Number of Copies. Copies of final documents shall be furnished in accordance with 7 CFR Part 1753.

Section 3. Plant Records

A. Prior to Cutover. If the Owner shall have notified the Engineer not later than ten (10) days prior to of the start of construction in a central office area that the Owner elects to assign to the Engineer the preparation of any of the following plant records, the Engineer shall prepare and deliver these records to the Owner, not later than fifteen (15) calendar days prior to the start of Cutover of each central office area included as a part of the Project. These records cover the Cutover work on facilities completed as of the date of delivery of such records for each such area. The following records shall be in such form as the Owner, with the approval of the Administrator, may prescribe:

1. Cable schematics, corrected to show ''as constructed'' conditions of that portion of the Project as of such date;

2. Cable records data, for completed line segments as of such date;

3. Line and station data for completed line segments as of such date; and

4. Terminal assignment records.

B. After Cutover. The Engineer shall deliver to the Owner, within thirty (30) calendar days after Cutover of facilities in any completed exchange area or completed section of the Project, the record drawings of the following plant records covering such Project area (excluding any of such records that the Owner has previously elected to prepare with its own forces):

1. Cable schematics, corrected to show ''as constructed'' conditions of such Project area;

2. Cable record data, for all construction completed in such Project area;

3. Line and station records for all lines completed in such Project area as a part of the Project;

4. Final maps, showing record drawings facilities completed in such Project area; and

5. Final complete and detailed construction sheets, showing facilities completed in such Project area, including the designation of assembly units of existing plant retained in place along existing plant lines segments on which modification work was performed as a part of the Project.

Section 4. Inventory and Appraisal. When requested by the Owner, the Engineer shall prepare within thirty (30) calendar days after completion of construction of the Project and submit to the Owner an inventory and appraisal of all existing telephone plant retained as part of the Owner's system. The inventory and appraisal shall be in such form and provide such data as the Owner, with the approval of the Administrator, may prescribe.

Section 5. Compensation

A. For Services Under sections 1, 3 and 4. The Owner shall pay the Engineer ''time and expense'' compensation, as defined and detailed in current Table 2 of this Agreement for all services performed under sections 1, 3 and 4. Compensation under this section shall not exceed _____ dollars ($_____) unless said amount has been increased by a contract amendment approved by the Owner and the Administrator. Appropriate documentation justifying the increase shall accompany the contract amendment.

Compensation under paragraph A of this section shall be due and payable as follows:

1. Ninety-five Percent (95%) thereof shall be due and payable ten (10) days after delivery each month of the invoice of the Engineer;

2. The balance of such compensation shall be due and payable ten (10) days after delivery of a statement by the Engineer to the Owner certifying that all final documents prepared by the Engineer, for execution by the Contractor, have been mailed or delivered to the Contractor for execution.

B. For Services Under section 2. The Owner shall pay the Engineer for all services performed under section 2 as follows:

1. The sum of _____ dollars ($_____) for each service entrance to be installed, replaced or modified during the construction of the Project; plus

2. The sum of _____ dollars ($_____); or when the Project is divided into sections for which separate outside plant plans and specifications are prepared, the sum of _____ dollars ($_____) for each section requiring final documents; plus the sum of _____ dollars ($_____) for each mile of Project line facilities included in the final documents. Ninety-five (95%) percent of the compensation under this paragraph shall be due and payable ten (10) days after approval by the Owner and the Administrator of the respective final documents and the balance of the compensation under this paragraph shall be due and payable ten (10) days after completion of the Project as defined in the Table 1.

C. Bi-weekly Statement. For compensation covered by paragraph A this section, the Engineer shall submit to the Owner a biweekly statement showing the names of the Residents and Inspectors, and the actual time spent on the Project by each Resident and each Inspector during the preceding period. The statement should be prepared and submitted to the Owner in a format similar to that shown in RUS Form 217, Exhibit A.

Section 6. Section Reference. Unless otherwise specified or indicated, any reference to ''section'' shall mean within this attachment RUS Form 217g—Outside Plant Construction-Project Direction, Inspection, Testing and Contract Closeout.

[End of clause]

[62 FR 7138, Feb. 18, 1997]

§§ 1755.218—1755.369 [Reserved]

§ 1755.370 RUS specification for seven wire galvanized steel strand.

(a) RUS incorporates by reference ASTM A475–78, Standard Specification for Zinc-Coated Steel Wire Strand, issued May 1978. All seven wire galvanized steel strand purchased after April 1, 1990, for use on telecommunications systems financed by RUS loan funds must conform to this standard. This incorporation by reference was approved by the Director of the Federal Register in accordance with 5 U.S.C. 552(a) and 1 CFR part 51 on January 19, 1990). Copies of ASTM A475–78 are available for inspection during normal business hours at the Office of the Federal Register, 800 North Capitol Street, NW., suite 700, Washington, DC, and at the Rural Utilities Service, Administrative Services Division, room 0175–S, U.S. Department of Agriculture, Washington, DC 20250, telephone 202–382–9551. Copies are available from the American Society for Testing and Materials, 1916 Race Street, Philadelphia, PA 19103, telephone 215–299–5400.

(b) In addition to the requirements of ASTM 475–78, all coils and reels having Class B or C coatings shall be marked with a 3-inch wide and 6-inch long deep-colored stripe, green or orange, respectively, to identify the class of galvanized coating of the strand. This

marking shall be applied to the exposed convolutions of the strand in the eye of the coils and located near the midpoint on the outside layer of strand on the reels. The marking shall not cover any welded joint markings.

[55 FR 1792, Jan. 19, 1990; 55 FR 3685, Feb. 2, 1990. Redesignated at 55 FR 39397, Sept. 27, 1990]

§§1755.371—1755.389 [Reserved]

§1755.390 RUS specification for filled telephone cables.

(a) *Scope.* (1) This section covers the requirements for filled telephone cables intended for direct burial installation either by trenching or by direct plowing, for underground application by placement in a duct, or for aerial installations by attachment to a support strand.

(i) The conductors are solid copper, individually insulated with an extruded solid insulating compound.

(ii) The insulated conductors are twisted into pairs which are then stranded or oscillated to form a cylindrical core.

(iii) For high frequency applications, the cable core may be separated into compartments with screening shields.

(iv) A moisture resistant filling compound is applied to the stranded conductors completely covering the insulated conductors and filling the interstices between pairs and units.

(v) The cable structure is completed by the application of suitable core wrapping material, a flooding compound, a shield or a shield/armor, and an overall plastic jacket.

(2) The number of pairs and gauge size of conductors which are used within the RUS program are provided in the following table:

AWG	19	22	24	26
Pairs	6	6	6	
	12	12	12	
	18	18	18	
	25	25	25	25
		50	50	50
		75	75	75
		100	100	100
		150	150	150
		200	200	200
		300	300	300
		400	400	400
			600	600
				900

NOTE: Cables larger in pair sizes than those shown in this table must meet all requirements of this section.

(3) Screened cable, when specified, must meet all requirements of this section. The pair sizes of screened cables used within the RUS program are referenced in paragraph (e)(2)(i) of this section.

(4) All cables sold to RUS borrowers for projects involving RUS loan funds under this section must be accepted by RUS Technical Standards Committee ''A'' (Telephone). For cables manufactured to the specification of this section, all design changes to an accepted design must be submitted for acceptance. RUS will be the sole authority on what constitutes a design change.

(5) Materials, manufacturing techniques, or cable designs not specifically addressed by this section may be allowed if accepted by RUS. Justification for acceptance of modified materials, manufacturing techniques, or cable designs must be provided to substantiate product utility and long-term stability and endurance.

(6) The American National Standard Institute/Insulated Cable Engineers Association, Inc. (ANSI/ICEA) S-84–608–1988 Standard For Telecommunications Cable, Filled, Polyolefin Insulated, Copper Conductor Technical Requirements referenced throughout this section is incorporated by reference by RUS. This incorporation by reference was approved by the Director of the Federal Register in accordance with 5 U.S.C. 552(a) and 1 CFR part 51. Copies of ANSI/ICEA S-84–608–1988 are available for inspection during normal business hours at RUS, room 2845, U.S. Department of Agriculture, Washington, DC 20250 or at the Office of the Federal Register, 800 North Capitol Street, NW., suite 700, Washington, DC. Copies

are available from ICEA, P. O. Box 440, South Yarmouth, MA 02664, telephone number (508) 394–4424.

(7) American Society for Testing and Materials specifications (ASTM) A 505-87, Standard Specification for Steel, Sheet and Strip, Alloy, Hot-Rolled and Cold-Rolled, General Requirements For; ASTM B 193-87, Standard Test Method for Resistivity of Electrical Conductor Materials; ASTM B 224-80, Standard Classification of Coppers; ASTM B 694-86, Standard Specification for Copper, Copper Alloy, and Copper-Clad Stainless Steel Sheet and Strip for Electrical Cable Shielding; ASTM D 4565-90a, Standard Test Methods for Physical and Environmental Performance Properties of Insulations and Jackets for Telecommunications Wire and Cable; and ASTM D 4566-90, Standard Test Methods for Electrical Performance Properties of Insulations and Jackets for Telecommunications Wire and Cable referenced in this section are incorporated by reference by RUS. These incorporations by references were approved by the Director of the Federal Register in accordance with 5 U.S.C. 552(a) and 1 CFR part 51. Copies of the ASTM standards are available for inspection during normal business hours at RUS, room 2845, U.S. Department of Agriculture, Washington, DC 20250 or at the Office of the Federal Register, 800 North Capitol Street, NW., suite 700, Washington, DC. Copies are available from ASTM, 1916 Race Street, Philadelphia, PA 19103–1187, telephone number (215) 299–5585.

(b) *Conductors and conductor insulation.* (1) The gauge sizes of the copper conductors covered by this specification must be 19, 22, 24, and 26 American Wire Gauge (AWG).

(2) Each conductor must comply with the requirements specified in ANSI/ICEA S-84–608–1988, paragraph 2.1.

(3) Factory joints made in conductors during the manufacturing process must comply with the requirements specified in ANSI/ICEA S-84–608–1988, paragraph 2.2.

(4) The raw materials used for conductor insulation must comply with the requirements specified in ANSI/ICEA S-84–608–1988, paragraphs 3.1 through 3.1.3.

(5) The finished conductor insulation must comply with the requirements specified in ANSI/ICEA S-84–608–1988, paragraphs 3.2.1 and 3.3.

(6) Insulated conductors must not have an overall diameter greater than 2 millimeters (mm) (0.081 inch (in.)).

(7) A permissible overall performance level of faults in conductor insulation must average not greater than one fault per 12,000 conductor meters (40,000 conductor feet) for each gauge of conductor.

(i) All insulated conductors must be continuously tested for insulation faults during the twinning operation with a method of testing acceptable to RUS. The length count and number of faults must be recorded. The information must be retained for a period of 6 months and be available for review by RUS when requested.

(ii) The voltages for determining compliance with the requirements of this section are as follows:

AWG	Direct Current Voltages (kilovolts)
19	8.0
22	6.0
24	5.0
26	4.0

(8) Repairs to the conductor insulation during manufacture are permissible. The method of repair must be accepted by RUS prior to its use. The repaired insulation must be capable of meeting the relevant electrical requirements of this section.

(9) All repaired sections of insulation must be retested in the same manner as originally tested for compliance with paragraph (b)(7) of this section.

(10) The colored insulating material removed from or tested on the conductor, from a finished cable, must meet the performance requirements specified in ANSI/ICEA S-84–608–1988, paragraphs 3.4.1, 3.4.2, 3.4.4, 3.4.5, and 3.4.6.

(c) *Identification of pairs and twisting of pairs.* (1) The insulation must be colored to identify:

(i) The tip and ring conductor of each pair; and

(ii) Each pair in the completed cable.

(2) The colors to be used in the pairs in the 25 pair group, together with the pair numbers must be in accordance

with the table specified in ANSI/ICEA S-84–608–1988, paragraph 3.5.

(3) Positive identification of the tip and ring conductors of each pair by marking each conductor of a pair with the color of its mate is permissible. The method of marking must be accepted by RUS prior to its use.

(4) Other methods of providing positive identification of the tip and ring conductors of each pair may be employed if accepted by RUS prior to its use.

(5) The insulated conductors must be twisted into pairs.

(6) In order to provide sufficiently high crosstalk isolation, the pair twists must be designed to enable the cable to meet the capacitance unbalance and crosstalk loss requirements of paragraphs (k)(5), (k)(6), and (k)(8) of this section.

(7) The average length of pair twists in any pair in the finished cable, when measured on any 3 meter (10 foot) length, must not exceed the requirement specified in ANSI/ICEA S-84–608–1988, paragraph 3.5.

(d) *Forming of the cable core.* (1) Twisted pairs must be assembled in such a way as to form a substantially cylindrical group.

(2) When desired for lay-up reasons, the basic group may be divided into two or more subgroups called units.

(3) Each group, or unit in a particular group, must be enclosed in bindings of the colors indicated for its particular pair count. The pair count, indicated by the colors of insulation, must be consecutive as indicated in paragraph (d)(6) of this section through units in a group.

(4) The filling compound must be applied to the cable core in such a way as to provide as near a completely filled core as is commercially practical.

(5) Threads and tapes used as binders must comply with the requirements specified in ANSI/ICEA S-84–608–1988, paragraphs 4.2 and 4.2.1.

(6) The colors of the bindings and their significance with respect to pair count must be as follows:

Group No.	Color of Bindings	Group Pair Count
1	White-Blue	1–25
2	White-Orange	26–50
3	White-Green	51–75
4	White-Brown	76–100
5	White-Slate	101–125
6	Red-Blue	126–150
7	Red-Orange	151–175
8	Red-Green	176–200
9	Red-Brown	201–225
10	Red-Slate	226–250
11	Black-Blue	251–275
12	Black-Orange	276–300
13	Black-Green	301–325
14	Black-Brown	326–350
15	Black-Slate	351–375
16	Yellow-Blue	376–400
17	Yellow-Orange	401–425
18	Yellow-Green	426–450
19	Yellow-Brown	451–475
20	Yellow-Slate	476–500
21	Violet-Blue	501–525
22	Violet-Orange	526–550
23	Violet-Green	551–575
24	Violet-Brown	576–600

(7) The use of the white unit binder in cables of 100 pairs or less is optional.

(8) When desired for manufacturing reasons, two or more 25 pair groups may be bound together with nonhygroscopic and nonwicking threads or tapes into a super-unit. Threads or tapes must meet the requirements specified in paragraph (d)(5) of this section. The group binders and the super-unit binders must be color coded such that the combination of the two binders must positively identify each 25 pair group from every other 25 pair group in the cable. Super-unit binders must be of the color shown in the following table:

Super-Unit Binder Colors

Pair Numbers	Binder Color
1–600	White
601–1200	Red
1201–1800	Black
1801–2400	Yellow
2401–3000	Violet

(9) Color binders must not be missing for more than 90 meters (300 feet) from any 25 pair group or from any subgroup used as part of a super-unit. At any cable cross-section, no adjacent 25 pair groups and no more than one subgroup of any super-unit may have missing binders. In no case must the total number of missing binders exceed three. Missing super-unit binders must not be permitted for any distance.

(10) Any reel of cable which contains missing binders must be labeled indicating the colors and location of the binders involved. The labeling must be applied to the reel and also to the cable.

(e) *Screened cable.* (1) Screened cable must be constructed such that a metallic, internal screen(s) must be provided to separate and provide sufficient isolation between the compartments to meet the requirements of this section.

(2) At the option of the user or manufacturer, identified service pairs providing for voice order and fault location may be placed in screened cables.

(i) The number of service pairs provided must be one per twenty-five operating pairs plus two for a cable size up to and including 400 pairs, subject to a minimum of four service pairs. The pair counts for screened cables are as follows:

Screened Cable Pair Counts

Carrier Pair Count	Service Pairs	Total Pair Count
24	4	28
50	4	54
100	6	106
150	8	158
200	10	210
300	14	314
400	18	418

(ii) The service pairs must be equally divided among the compartments. The color sequence must be repeated in each compartment.

(iii) The electrical and physical characteristics of each service pair must meet all the requirements set forth in this section.

(iv) The colors used for the service pairs must be in accordance with the requirements of paragraph (b)(5) of this section. The color code used for the service pairs together with the service pair number are shown in the following table:

Color Code For Service Pairs

Service Pair No.	Color	
	Tip	Ring
1	White	Red
2	”	Black
3	”	Yellow
4	”	Violet
5	Red	Black
6	”	Yellow
7	”	Violet
8	Black	Yellow
9	”	Violet

(3) The screen tape must comply with the requirements specified in ANSI/ICEA S-84–608–1988, paragraphs 5.1 through 5.4.

(4) The screen tape must be tested for dielectric strength by completely removing the protective coating from one end to be used for grounding purposes.

(i) Using an electrode, over a 30 centimeter (1 foot) length, apply a direct current voltage at the rate of rise of 500 volts/second until failure.

(ii) No breakdown should occur below 8 kilovolts.

(f) *Filling compound.* (1) After or during the stranding operation and prior to application of the core wrap, filling compound must be applied to the cable core. The compound must be as nearly colorless as is commercially feasible and consistent with the end product requirements and pair identification.

(2) The filling compound must comply with the requirements specified in ANSI/ICEA S-84–608–1988, paragraphs 4.4 through 4.4.4.

(3) The individual cable manufacturer must satisfy RUS that the filling compound selected for use is suitable for its intended application. The filling compound must be applied to the cable in such a manner that the cable components will not be degraded.

(g) *Core wrap.* (1) The core wrap must comply with the requirements specified in ANSI/ICEA-S-84–608–1988, paragraph 4.3.

(2) If required for manufacturing reasons, white or colored binders of nonhygroscopic and nonwicking material

may be applied over the core and/or wrap. When used, binders must meet the requirements specified in paragraph (d)(5) of this section.

(3) Sufficient filling compound must be applied to the core wrap so that voids or air spaces existing between the core and the inner side of the core wrap are minimized.

(h) *Flooding compound.* (1) Sufficient flooding compound must be applied on all sheath interfaces so that voids and air spaces in these areas are minimized. When the optional armored design is used, the flooding compound must be applied between the core wrap and shield, between the shield and armor, and between the armor and the jacket so that voids and air spaces in these areas are minimized. The use of floodant over the outer metallic substrate is not required if uniform bonding, per paragraph (i)(7) of this section, is achieved between the plastic-clad metal and the jacket.

(2) The flooding compound must comply with the requirements specified in ANSI/ICEA S-84–608–1988, paragraph 4.5 and the jacket slip test requirements of appendix A, paragraph (III)(5) of this section.

(3) The individual cable manufacturer must satisfy RUS that the flooding compound selected for use is acceptable for the application.

(i) *Shield and optional armor.* (1) A single corrugated shield must be applied longitudinally over the core wrap.

(2) For unarmored cable the shield overlap must comply with the requirements specified in ANSI/ICEA S-84–608–1988, paragraph 6.3.2. Core diameter is defined as the diameter under the core wrap and binding.

(3) For cables containing the coated aluminum shield/coated steel armor (CACSP) sheath design, the coated aluminum shield must be applied in accordance with the requirements specified in ANSI/ICEA S-84–608–1988, paragraph 6.3.2, Dual Tape Shielding System.

(4) General requirements for application of the shielding material are as follows:

(i) Successive lengths of shielding tapes may be joined during the manufacturing process by means of cold weld, electric weld, soldering with a nonacid flux, or other acceptable means.

(ii) Shield splices must comply with the requirements specified in ANSI/ICEA S-84–608–1988, paragraph 6.3.3.

(iii) The corrugations and the application process of the coated aluminum and copper bearing shields must comply with the requirements specified in ANSI/ICEA S-84–608–1988, paragraph 6.3.1.

(iv) The shielding material must be applied in such a manner as to enable the cable to pass the cold bend test specified in paragraph (l)(3) of this section.

(5) The following is a list of acceptable materials for use as cable shielding. Other types of shielding materials may also be used provided they are accepted by RUS prior to their use.

Standard Cable	Gopher Resistant Cable
8-mil Coated Aluminum[1] 5-mil Copper	10-mil Copper 6-mil Copper-Clad Stainless Steel 5 mil Copper-Clad Stainless Steel 5 mil Copper-Clad Alloy Steel 7-mil Alloy 194 6-mil Alloy 194 8-mil Coated Aluminum[1] and 6-mil Coated Steel[1]

[1]Dimensions of uncoated metal

(i) The 8-mil aluminum tape must be plastic coated on both sides and must comply with the requirements of ANSI/ICEA S-84–608–1988, paragraph 6.2.2.

(ii) The 5-mil copper tape must comply with the requirements specified in ANSI/ICEA S-84–608–1988, paragraph 6.2.3.

(iii) The 10-mil copper tape must comply with the requirements specified in ANSI/ICEA S-84–608–1988, paragraph 6.2.4.

(iv) The 6-mil copper clad stainless steel tape must comply with the requirements specified in ANSI/ICEA S-84–608–1988, paragraph 6.2.5.

(v) The 5-mil copper clad stainless steel tape must be in the fully annealed condition and must conform to the requirements of American Society for Testing and Materials (ASTM) B 694–86, with a cladding ratio of 16/68/16.

(A) The electrical conductivity of the clad tape must be a minimum of 28 percent of the International Annealed

Copper Standard (IACS) when measured per ASTM B 193–87.

(B) The tape must be nominally 0.13 millimeter (0.005 inch) thick with a minimum thickness of 0.11 millimeter (0.0045 inch).

(vi) The 5-mil copper clad alloy steel tape must be in the fully annealed condition and the copper component must conform to the requirements of ASTM B 224–80 and the alloy steel component must conform to the requirements of ASTM A 505–87, with a cladding ratio of 16/68/16.

(A) The electrical conductivity of the copper clad alloy steel tape must comply with the requirement specified in paragraph (i)(5)(v)(A) of this section.

(B) The thickness of the copper clad alloy steel tape must comply with the requirements specified in paragraph (i)(5)(v)(B) of this section.

(vii) The 6-mil and 7-mil 194 copper alloy tapes must comply with the requirements specified in ANSI/ICEA S-84–608–1988, paragraph 6.2.6.

(6) The corrugation extensibility of the coated aluminum shield must comply with the requirements specified in ANSI/ICEA S-84–608–1988, paragraph 6.4.

(7) When the jacket is bonded to the plastic coated aluminum shield, the bond between the jacket and shield must comply with the requirements specified in ANSI/ICEA S-84–608–1988, paragraph 7.2.6.

(8) A single plastic-coated steel corrugated armor must be applied longitudinally directly over the coated aluminum shield listed in paragraph (i)(5) of this section with an overlap complying with the requirements specified in ANSI/ICEA S-84–608–1988, paragraph 6.3.2, Outer Steel Tape.

(9) Successive lengths of steel armoring tapes may be joined during the manufacturing process by means of cold weld, electric weld, soldering with a nonacid flux, or other acceptable means. Armor splices must comply with the breaking strength and resistance requirements specified in ANSI/ICEA S-84–608–1988, paragraph 6.3.3.

(10) The corrugations and the application process of the coated steel armor must comply with the requirements specified in ANSI/ICEA S-84–608–1988, paragraph 6.3.1.

(i) The corrugations of the armor tape must coincide with the corrugations of the coated aluminum shield.

(ii) Overlapped portions of the armor tape must be in register (corrugations must coincide at overlap) and in contact at the outer edge.

(11) The armoring material must be so applied to enable the cable to pass the cold bend test as specified in paragraph (l)(3) of this section.

(12) The 6-mil steel tape must be electrolytic chrome-coated steel (ECCS) plastic coated on both sides and must comply with the requirements specified in ANSI/ICEA S-84–608–1988, paragraph 6.2.8.

(13) When the jacket is bonded to the plastic-coated steel armor, the bond between the jacket and armor must comply with the requirement specified in ANSI/ICEA-S-84–608–1988, paragraph 7.2.6.

(j) *Cable jacket.* (1) The jacket must comply with the requirements specified in ANSI/ICEA S-84–608–1988, paragraph 7.2.

(2) The raw materials used for the cable jacket must comply with the requirements specified in ANSI/ICEA S-84–608–1988, paragraph 7.2.1.

(3) Jacketing material removed from or tested on the cable must meet the performance requirements specified in ANSI/ICEA S-84–608–1988, paragraphs 7.2.3 and 7.2.4.

(4) The thickness of the jacket must comply with the requirements specified in ANSI/ICEA S-84–608–1988, paragraph 7.2.2.

(k) *Electrical requirements*—(1) *Conductor resistance.* The direct current resistance of any conductor in a completed cable and the average resistance of all conductors in a Quality Control Lot must comply with the requirements specified in ANSI/ICEA S-84–608–1988, paragraph 8.1.

(2) *Resistance unbalance.* (i) The direct current resistance unbalance between the two conductors of any pair in a completed cable and the average resistance unbalance of all pairs in a completed cable must comply with the requirements specified in ANSI/ICEA S-84–608–1988, paragraph 8.2.

(ii) The resistance unbalance between tip and ring conductors shall be random with respect to the direction of

unbalance. That is, the resistance of the tip conductors shall not be consistently higher with respect to the ring conductors and vice versa.

(3) *Mutual capacitance.* The average mutual capacitance of all pairs in a completed cable and the individual mutual capacitance of any pair in a completed cable must comply with the requirements specified in ANSI/ICEA S-84–608–1988, paragraph 8.3.

(4) *Capacitance difference.* (i) The capacitance difference for completed cables having 75 pairs or greater must comply with the requirement specified in ANSI/ICEA S-84–608–1988, paragraph 8.4.

(ii) When measuring screened cable, the inner and outer pairs must be selected from both sides of the screen.

(5) *Pair-to-pair capacitance unbalance*—(i) *Pair-to-pair.* The capacitance unbalance as measured on the completed cable must comply with the requirements specified in ANSI/ICEA S-84–608–1988, paragraph 8.5.

(ii) *Screened cable.* In cables with 25 pairs or less and within each group of multigroup cables, the pair-to-pair capacitance unbalance between any two pairs in an individual compartment must comply with the requirements specified in ANSI/ICEA S-84–608–1988, paragraph 8.5. The pair-to-pair capacitance unbalances to be considered must be:

(A) Between pairs adjacent in a layer in an individual compartment;

(B) Between pairs in centers of 4 pairs or less in an individual compartment; and

(C) Between pairs in adjacent layers in an individual compartment when the number of pairs in the inner (smaller) layer is 6 or less. The center is counted as a layer.

(iii) In cables with 25 pairs or less, the root-mean-square (rms) value must include all the pair-to-pair unbalances measured for each compartment separately.

(iv) In cables containing more than 25 pairs, the rms value must include the pair-to-pair unbalances in the separate compartments.

(6) *Pair-to-ground capacitance unbalance*—(i) *Pair-to-ground.* The capacitance unbalance as measured on the completed cable must comply with the requirements specified in ANSI/ICEA S-84–608–1988, paragraph 8.6.

(ii) When measuring pair-to-ground capacitance unbalance all pairs except the pair under test are grounded to the shield and/or shield/armor except when measuring cables containing super units in which case all other pairs in the same super unit must be grounded to the shield.

(iii) The screen tape must be left floating during the test.

(iv) Pair-to-ground capacitance unbalance may vary directly with the length of the cable.

(7) *Attenuation.* (i) For nonscreened and screened cables, the average attenuation of all pairs on any reel when measured at 150 and 772 kilohertz must comply with the requirements specified in ANSI/ICEA S-84–608–1988, paragraph 8.7, Solid Column.

(ii) For T1C type cables over 12 pairs, the maximum average attenuation of all pairs on any reel must not exceed the values listed below when measured at a frequency of 1576 kilohertz at or corrected to a temperature of 20 ± 1° C. The test must be conducted in accordance with ASTM D 4566–90.

AWG	Maximum Average Attenuation decibel/kilometer (dB/km) (decibel/mile)
19	13.4 (21.5)
22	18.3 (29.4)
24	23.1 (37.2)

(8) *Crosstalk loss.* (i) The equal level far-end power sum crosstalk loss (FEXT) as measured on the completed cable must comply with the requirements specified in ANSI/ICEA S-84–608–1988, paragraph 8.8, FEXT Table.

(ii) The near-end power sum crosstalk loss (NEXT) as measured on completed cable must comply with the requirements specified in ANSI/ICEA S-84–608–1988, paragraph 8.8, NEXT Table.

(iii) *Screened cable.* (A) For screened cables the NEXT as measured on the completed cable must comply with the requirements specified in ANSI/ICEA S-84–608–1988, paragraphs 8.9 and 8.9.1.

(B) For T1C screened cable the NEXT as measured on the completed cable must comply with the requirements

specified in ANSI/ICEA S-84–608–1988, paragraphs 8.9 and 8.9.2.

(9) *Insulation resistance.* The insulation resistance of each insulated conductor in a completed cable must comply with the requirement specified in ANSI/ICEA S-84–608–1988, paragraph 8.11.

(10) *High voltage test.* (i) In each length of completed cable, the insulation between conductors must comply with the requirements specified in ANSI/ICEA S-84–608–1988, paragraph 8.12, Solid Column.

(ii) In each length of completed cable, the dielectric between the shield and/or armor and conductors in the core must comply with the requirements specified in ANSI/ICEA S-84–608–1988, paragraph 8.13, Single Jacketed, Solid Column. In screened cable the screen tape must be left floating.

(iii) *Screened cable.* (A) In each length of completed screened cable, the dielectric between the screen tape and the conductors in the core must comply with the requirement specified in ANSI/ICEA S-84–608–1988, paragraph 8.14.

(B) In this test, the cable shield and/or armor must be left floating.I11(11) *Electrical variations.* (i) Pairs in each length of cable having either a ground, cross, short, or open circuit condition will not be permitted.

(ii) The maximum number of pairs in a cable which may vary as specified in paragraph (k)(11)(iii) of this section from the electrical parameters given in this section are listed below. These pairs may be excluded from the arithmetic calculation.

Nominal Pair Count	Maximum Number of Pairs With Allowable Electrical Variation
6–100	1
101–300	2
301–400	3
401–600	4
601 and above	6

(iii) *Parameter variations.* (A) *Capacitance unbalance-to-ground.* If the cable fails either the maximum individual pair or average capacitance unbalance-to-ground requirement and all individual pairs are 3937 picofarad/kilometer (1200 picofarad/1000 feet) or less, the number of pairs specified in paragraph (k)(11)(ii) of this section may be eliminated from the average and maximum individual calculations.

(B) *Resistance unbalance.* Individual pair of 7 percent for all gauges.

(C) *Conductor resistance, maximum.* The following table shows maximum conductor resistance:

AWG	ohms/kilometer	(ohms/1000 feet)
19	29.9	(9.1)
22	60.0	(18.3)
24	94.5	(28.8)
26	151.6	(46.2)

NOTE: RUS recognizes that in large pair count cable (600 pair and above) a cross, short or open circuit condition occasionally may develop in a pair which does not affect the performance of the other cable pairs. In these circumstances rejection of the entire cable may be economically unsound or repairs may be impractical. In such circumstances the manufacturer may desire to negotiate with the customer for acceptance of the cable. No more than 0.5 percent of the pairs may be involved.

(l) *Mechanical requirements*—(1) *Compound flow test.* All cables manufactured in accordance with the requirements of this section must be capable of meeting the compound flow test specified in ANSI/ICEA S-84–608–1988, paragraph 9.1 using a test temperature of 80 ± 1° C.

(2) *Water penetration.* All cables manufactured in accordance with the requirements of this section must be capable of meeting the water penetration test specified in ANSI/ICEA S-84–608–1988, paragraph 9.2.

(3) *Cable cold bend test.* All cables manufactured in accordance with the requirements of this section must be capable of meeting the cable cold bend test specified in ANSI/ICEA S-84–608–1988, paragraph 9.3.

(4) *Cable impact test.* All cables manufactured in accordance with the requirements of this section must be capable of meeting the cable impact test specified in ANSI/ICEA S-84–608–1988, paragraph 9.4.

(5) *Jacket notch test (CACSP sheath only).* All cables utilizing the coated aluminum/coated steel sheath (CACSP) design manufactured in accordance with the requirements of this section must be capable of meeting the jacket notch test specified in ANSI/ICEA S-84–608–1988, paragraph 9.5.

(6) *Cable torsion test (CACSP sheath only).* All cables utilizing the coated

aluminum/coated steel sheath (CACSP) design manufactured in accordance with the requirements of this section must be capable of meeting the cable torsion test specified in ANSI/ICEA S-84–608–1988, paragraph 9.6.

(m) *Sheath slitting cord (optional).* (1) Sheath slitting cords may be used in the cable structure at the option of the manufacturer unless specified by the end user.

(2) When a sheath slitting cord is used it must be nonhygroscopic and nonwicking, continuous throughout a length of cable and of sufficient strength to open the sheath without breaking the cord.

(n) *Identification marker and length marker.* (1) Each length of cable must be identified in accordance with ANSI/ICEA S-84–608–1988, paragraphs 10.1 through 10.1.4. The color of the ink used for the initial outer jacket marking must be either white or silver.

(2) The markings must be printed on the jacket at regular intervals of not more than 0.6 meter (2 feet).

(3) The completed cable must have sequentially numbered length markers in accordance with ANSI/ICEA S-84–608–1988, paragraph 10.1.5. The color of the ink used for the initial outer jacket marking must be either white or silver.

(o) *Preconnectorized cable (optional).* (1) At the option of the manufacturer and upon request by the purchaser, cables 100 pairs and larger may be factory terminated in 25 pair splicing modules.

(2) The splicing modules must meet the requirements of RUS Bulletin 345–54, PE-52, RUS Specification for Telephone Cable Splicing Connectors (Incorporated by reference at § 1755.97), and be accepted by RUS prior to their use.

(p) *Acceptance testing and extent of testing.* (1) The tests described in appendix A of this section are intended for acceptance of cable designs and major modifications of accepted designs. What constitutes a major modification is at the discretion of RUS. These tests are intended to show the inherent capability of the manufacturer to produce cable products having long life and stability.

(2) For initial acceptance, the manufacturer must submit:

(i) An original signature certification that the product fully complies with each section of the specification;

(ii) Qualification Test Data, per appendix A of this section;

(iii) To periodic plant inspections;

(iv) A certification that the product does or does not comply with the domestic origin manufacturing provisions of the ''Buy American'' requirements of the Rural Electrification Act of 1938 (7 U.S.C. 901 *et seq.*);

(v) Written user testimonials concerning field performance of the product; and

(vi) Other nonproprietary data deemed necessary by the Chief, Outside Plant Branch (Telephone).

(3) For requalification acceptance, the manufacturer must submit an original signature certification that the product fully complies with each section of the specification, excluding the Qualification Section, and a certification that the product does or does not comply with the domestic origin manufacturing provisions of the ''Buy American'' requirements of the Rural Electrification Act of 1938 (7 U.S.C. 901 *et seq.*), for acceptance by August 30 of each year. The required data must have been gathered within 90 days of the submission. If the initial acceptance of a product to this specification was within 180 days of August 30, then requalification for that product will not be required for that year.

(4) Initial and requalification acceptance requests should be addressed to:

Chairman, Technical Standards Committee ''A'' (Telephone), Telecommunications Standards Division, Rural Utilities Service, Washington, DC 20250–1500.

(5) *Tests on 100 percent of completed cable.* (i) The shield and/or armor of each length of cable must be tested for continuity in accordance with ANSI/ICEA S-84–608–1988, paragraph 8.16.

(ii) The screen tape of each length of screened cable must be tested for continuity in accordance with ANSI/ICEA S-84–608–1988, paragraph 8.16.

(iii) Dielectric strength between conductors and shield and/or armor must be tested to determine freedom from grounds in accordance with paragraph (k)(10)(ii) of this section.

(iv) Dielectric strength between conductors and screen tape must be tested

to determine freedom from grounds in accordance with paragraph (k)(10)(iii) of this section.

(v) Each conductor in the completed cable must be tested for continuity in accordance with ANSI/ICEA S-84–608–1988, paragraph 8.16.

(vi) Dielectric strength between conductors must be tested to insure freedom from shorts and crosses in each length of completed cable in accordance with paragraph (k)(10)(i) of this section.

(vii) Each conductor in the completed preconnectorized cable must be tested for continuity.

(viii) Each length of completed preconnectorized cable must be tested for split pairs.

(ix) The average mutual capacitance must be measured on all cables. If the average mutual capacitance for the first 100 pairs tested from randomly selected groups is between 50 and 53 nanofarad/kilometer (nF/km) (80 and 85 nanofarad/mile), the remainder of the pairs need not be tested on the 100 percent basis (See paragraph (k)(3) of this section).

(6) *Capability tests.* Tests on a quality assurance basis must be made as frequently as is required for each manufacturer to determine and maintain compliance with:

(i) Performance requirements for conductor insulation, jacketing material, and filling and flooding compounds;

(ii) Bonding properties of coated or laminated shielding and armoring materials and performance requirements for screen tape;

(iii) Sequential marking and lettering;

(iv) Capacitance difference, capacitance unbalance, crosstalk, and attenuation;

(v) Insulation resistance, conductor resistance and resistance unbalance;

(vi) Cable cold bend and cable impact tests;

(vii) Water penetration and compound flow tests; and

(viii) Jacket notch and cable torsion tests.

(q) *Summary of records of electrical and physical tests.* (1) Each manufacturer must maintain suitable summary records for a period of at least 3 years of all electrical and physical tests required on completed cable by this section as set forth in paragraphs (p)(5) and (p)(6) of this section. The test data for a particular reel must be in a form that it may be readily available to the purchaser or to RUS upon request.

(2) Measurements and computed values must be rounded off to the number of places or figures specified for the requirement according to ANSI/ICEA S-84–608–1988, paragraph 1.3.

(r) *Manufacturing irregularities.* (1) Repairs to the shield and/or armor are not permitted in cable supplied to end users under this section.

(2) Minor defects in jackets (defects having a dimension of 3 millimeters (0.125 inch) or less in any direction) may be repaired by means of heat fusing in accordance with good commercial practices utilizing sheath grade compounds.

(s) *Preparation for shipment.* (1) The cable must be shipped on reels. The diameter of the drum must be large enough to prevent damage to the cable from reeling or unreeling. The reels must be substantial and so constructed as to prevent damage to the cable during shipment and handling.

(2) The thermal wrap must comply with the requirements of ANSI/ICEA S-84–608–1988, paragraph 10.3. When a thermal reel wrap is supplied, the wrap must be applied to the reel and must be suitably secured in place to minimize thermal exposure to the cable during storage and shipment. The use of the thermal reel wrap as a means of reel protection will be at the option of the manufacturer unless specified by the end user.

(3) The outer end of the cable must be securely fastened to the reel head so as to prevent the cable from becoming loose in transit. The inner end of the cable must be securely fastened in such a way as to make it readily available if required for electrical testing. Spikes, staples, or other fastening devices which penetrate the cable jacket must not be used. The method of fastening the cable ends must be accepted by RUS prior to its use.

(4) Each length of cable must be wound on a separate reel unless otherwise specified or agreed to by the purchaser.

(5) The arbor hole must admit a spindle 63 millimeters (2.5 inches) in diameter without binding. Steel arbor hole liners may be used but must be accepted by RUS prior to their use.

(6) Each reel must be plainly marked to indicate the direction in which it should be rolled to prevent loosening of the cable on the reel.

(7) Each reel must be stenciled or labeled on either one or both sides with the information specified in ANSI/ICEA S-84–608–1988, paragraph 10.4 and the RUS cable designation:

Cable Designation
BFC
Cable Construction
Pair Count
Conductor Gauge

A = Coated Aluminum Shield
C = Copper Shield
Y = Gopher Resistant Shield
X = Armored, Separate Shield
H = T1 Screened Cable
H1C = T1C Screened Cable
P = Preconnectorized
Example: BFCXH100–22

Buried Filled Cable, Armored (w/separate shield), T1 Screened Cable, 100 pair, 22 AWG.

(8) When cable manufactured to the requirements of this section is shipped, both ends must be equipped with end caps acceptable to RUS.

(9) When preconnectorized cables are shipped, the splicing modules must be protected to prevent damage during shipment and handling. The protection method must be acceptable to RUS and accepted prior to its use.

(10) All cables ordered for use in underground duct applications must be equipped with a factory-installed pulling-eye on the outer end in accordance with ANSI/ICEA S-84–608–1988, paragraph 10.5.2.

(The information and recordkeeping requirements of this section have been approved by the Office of Management and Budget (OMB) under the control number 0572–0059)

APPENDIX A TO 7 CFR 1755.390—QUALIFICATION TEST METHODS

(I) The test procedures described in this appendix are for qualification of initial designs and major modification of accepted designs. Included in (V) of this appendix are suggested formats that may be used in submitting the test results to RUS.

(II) *Sample selection and preparation.* (1) All testing must be performed on lengths removed sequentially from the same 25 pair, 22 gauge jacketed cable. This cable must not have been exposed to temperatures in excess of 38° C since its initial cool down after sheathing. The lengths specified are minimum lengths and if desirable from a laboratory testing standpoint longer lengths may be used.

(a) Length A shall be 10 ± 0.2 meters (33 ± 0.5 feet) long and must be maintained at 23 ± 3° C. One length is required.

(b) Length B shall be 12 ± 0.2 meters (40 ± 0.5 feet) long. Prepare the test sample by removing the jacket, shield or shield/armor and core wrap for a sufficient distance on both ends to allow the insulated conductors to be flared out. Remove sufficient conductor insulation so that appropriate electrical test connections can be made at both ends. Coil the sample with a diameter of 15 to 20 times its sheath diameter. Three lengths are required.

(c) Length C shall be one meter (3 feet) long. Four lengths are required.

(d) Length D shall be 300 millimeters (1 foot) long. Four lengths are required.

(e) Length E must be 600 millimeters (2 feet) long. Four lengths are required.

(f) Length F shall be 3 meters (10 feet) long and must be maintained at 23 ± 3° C for the duration of the test. Two lengths are required.

(2) *Data reference temperature.* Unless otherwise specified, all measurements must be made at 23 ± 3° C.

(III) *Environmental tests*—(1) *Heat aging test*—(a) *Test samples.* Place one sample each of lengths B, C, D and E in an oven or environmental chamber. The ends of Sample B must exit from the chamber or oven for electrical tests. Securely seal the oven exit holes.

(b) *Sequence of tests.* The samples are to be subjected to the following tests after conditioning:

(i) Water Immersion Test outlined in (III)(2) of this appendix;

(ii) Water Penetration Test outlined in (III)(3) of this appendix;

(iii) Insulation Compression Test outlined in (III)(4) of this appendix; and

(iv) Jacket Slip Strength Test outlined in (III)(5) of this appendix.

(c) *Initial measurements.* (i) For Sample B measure the open circuit capacitance for each odd numbered pair at 1, 150, and 772 kilohertz, and the attenuation at 150 and 772 kilohertz after conditioning the sample at the data reference temperature for 24 hours. Calculate the average and standard deviation for the data of the 13 pairs on a per kilometer or (on a per mile) basis.

(ii) The attenuation at 150 and 772 kilohertz may be calculated from open circuit admittance (Yoc) and short circuit impedance (Zsc) or may be obtained by direct measurement of attenuation.

(iii) Record on suggested formats in (V) of this appendix or on other easily readable formats.

(d) *Heat conditioning.* (i) Immediately after completing the initial measurements, condition the sample for 14 days at a temperature of 65 ± 2° C.

(ii) At the end of this period note any exudation of cable filler. Measure and calculate the parameters given in (III)(1)(c) of this appendix. Record on suggested formats in (V) of this appendix or on other easily readable formats.

(iii) Cut away and discard a one meter (3 foot) section from each end of length B.

(e) *Overall electrical deviation.* (i) Calculate the percent change in all average parameters between the final parameters after conditioning and the initial parameters in (III)(1)(c) of this appendix.

(ii) The stability of the electrical parameters after completion of this test must be within the following prescribed limits:

(A) *Capacitance.* The average mutual capacitance must be within 5 percent of its original value;

(B) The change in average mutual capacitance must be less than 5 percent over frequency 1 to 150 kilohertz; and

(C) *Attenuation.* The 150 and 772 kilohertz attenuation must not have increased by more than 5 percent over their original values.

(2) *Water immersion electrical test*—(a) *Test sample selection.* The 10 meter (33 foot) section of length B must be tested.

(b) *Test sample preparation.* Prepare the sample by removing the jacket, shield or shield/armor, and core wrap for sufficient distance to allow one end to be accessed for test connections. Cut out a series of 6 millimeter (0.25 inch) diameter holes along the test sample, at 30 centimeters (1 foot) intervals progressing successively 90 degrees around the circumference of the cable. Assure that the cable core is exposed at each hole by slitting the core wrapper. Place the prepared sample in a dry vessel which when filled will maintain a one meter (3 foot) head of water over 6 meters (20 feet) of uncoiled cable. Extend and fasten the ends of the cable so they will be above the water line and the pairs are rigidly held for the duration of the test.

(c) *Capacitance testing.* Measure the initial values of mutual capacitance of all odd pairs in each cable at a frequency of 1 kilohertz before filling the vessel with water. Be sure the cable shield or shield/armor is grounded to the test equipment. Fill the vessels until there is a one meter (3 foot) head of water on the cables.

(i) Remeasure the mutual capacitance after the cables have been submerged for 24 hours and again after 30 days.

(ii) Record each sample separately on suggested formats in (V) of this appendix or on other easily readable formats.

(d) *Overall electrical deviation.* (i) Calculate the percent change in all average parameters between the final parameters after conditioning with the initial parameters in (III)(2)(c) of this appendix.

(ii) The average mutual capacitance must be within 5 percent of its original value.

(3) *Water penetration testing.* (a) A watertight closure must be placed over the jacket of length C. The closure must not be placed over the jacket so tightly that the flow of water through pre-existing voids of air spaces is restricted. The other end of the sample must remain open.

(b) Test per Option A or Option B—(i) *Option A.* Weigh the sample and closure prior to testing. Fill the closure with water and place under a continuous pressure of 10 ± 0.7 kilopascals (1.5 ± 0.1 pounds per square inch gauge) for one hour. Collect the water leakage from the end of the test sample during the test and weigh to the nearest 0.1 gram. Immediately after the one hour test, seal the ends of the cable with a thin layer of grease and remove all visible water from the closure, being careful not to remove water that penetrated into the core during the test. Reweigh the sample and determine the weight of water that penetrated into the core. The weight of water that penetrated into the core must not exceed 8 grams.

(ii) *Option B.* Fill the closure with a 0.2 gram sodium fluorscein per liter water solution and apply a continuous pressure 10 ± 0.7 kilopascals (1.5 ± 0.1 pounds per square inch gauge) for one hour. Catch and weigh any water that leaks from the end of the cable during the one hour period. If no water leaks from the sample, carefully remove the water from the closure. Then carefully remove the jacket, shield or shield/armor and core wrap one at a time, examining with an ultraviolet light source for water penetration. After removal of the core wrap, carefully dissect the core and examine for water penetration within the core. Where water penetration is observed, measure the penetration distance. The distance of water penetration into the core must not exceed 127 millimeters (5.0 inches).

(4) *Insulation compression test*—(a) *Test Sample D.* Remove jacket, shield or shield/armor, and core wrap being careful not to damage the conductor insulation. Remove one pair from the core and carefully separate, wipe off core filler, and straighten the insulated conductors. Retwist the two insulated conductors together under sufficient tension to form 10 evenly spaced 360 degree twists in a length of 10 centimeters (4 inches).

(b) *Sample testing.* Center the mid 50 millimeters (2 inches) of the twisted pair between 2 smooth rigid parallel metal plates that are 50 millimeters × 50 millimeters (2 inches × 2

inches). Apply a 1.5 volt direct current potential between the conductors, using a light or buzzer to indicate electrical contact between the conductors. Apply a constant load of 67 newtons (15 pound-force) on the sample for one minute and monitor for evidence of contact between the conductors. Record results on suggested formats in (V) of this appendix or on other easily readable formats.

(5) *Jacket slip strength test*—(a) *Sample selection.* Test Sample E from (III)(1)(a) of this appendix.

(b) *Sample preparation.* Prepare test sample in accordance with the procedures specified in ASTM D 4565–90a.

(c) *Sample conditioning and testing.* Remove the sample from the tensile tester prior to testing and condition for one hour at 50 ± 2° C. Test immediately in accordance with the procedures specified in ASTM D 4565–90a. A minimum jacket slip strength of 67 newtons (15 pound-force) is required. Record the highest load attained.

(6) *Humidity exposure.* (a) Repeat steps (III)(1)(a) through (III)(1)(c)(iii) of this appendix for separate set of samples B, C, D, and E which have not been subjected to prior environmental conditioning.

(b) Immediately after completing the measurements, expose the test sample to 100 temperature cyclings. Relative humidity within the chamber must be maintained at 90 ± 2 percent. One cycle consists of beginning at a stabilized chamber and test sample temperature of 52 ± 1° C, increasing the temperature to 57 ± 1° C, allowing the chamber and test samples to stabilize at this level, then dropping the temperature back to 52 ± 1° C.

(c) Repeat steps (III)(1)(d)(ii) through (III)(5)(c) of this appendix.

(7) *Temperature cycling.* (a) Repeat steps (III)(1)(a) through (III)(1)(c)(iii) of this appendix for separate set of samples B, C, D, and E which have not been subjected to prior environmental conditioning.

(b) Immediately after completing the measurements, subject the test sample to the 10 cycles of temperature between a minimum of −40° C and +60° C. The test sample must be held at each temperature extreme for a minimum of 1 1/2 hours during each cycle of temperature. The air within the temperature cycling chamber must be circulated throughout the duration of the cycling.

(c) Repeat steps (III)(1)(d)(ii) through (III)(5)(c) of this appendix.

(IV) *Control sample*—(1) *Test samples.* A separate set of lengths A, C, D, E, and F must have been maintained at 23 ± 3° C for at least 48 hours before the testing.

(2) Repeat steps (III)(2) through (III)(5)(c) of this appendix except use length A instead of length B.

(3) *Surge Test.* (a) One length of sample F must be used to measure the breakdown between conductors while the other length of F must be used to measure the core to shield breakdown.

(b) The samples must be capable of withstanding without damage, a single surge voltage of 20 kilovolts peak between conductors, and a 35 kilovolts peak surge voltage between conductors and the shield or shield/armor as hereinafter described. The surge voltage must be developed from a capacitor discharged through a forming resistor connected in parallel with the dielectric of the test sample. The surge generator constants must be such as to produce a surge of 1.5 × 40 microsecond wave shape.

(c) The shape of the generated wave must be determined at a reduced voltage by connecting an oscilloscope across the forming resistor with the cable sample connected in parallel with the forming resistor. The capacitor bank is charged to the test voltage and then discharged through the forming resistor and test sample. The test sample will be considered to have passed the test if there is no distinct change in the wave shape obtained with the initial reduced voltage compared to that obtained after the application of the test voltage.

(V) The following suggested formats may be used in submitting the test results to RUS:

Environmental Conditioning_____

FREQUENCY 1 KILOHERTZ

Pair Number	Capacitance nF/km (nanofarad/mile)	
	Initial	Final
1	_____	_____
3	_____	_____
5	_____	_____
7	_____	_____
9	_____	_____
11	_____	_____
13	_____	_____
15	_____	_____
17	_____	_____
19	_____	_____
21	_____	_____
23	_____	_____
25	_____	_____
Average $\bar{x}$	_____	_____

Overall Percent Difference in Average $\bar{x}$ _____

Environmental Conditioning_____

FREQUENCY 150 KILOHERTZ

Pair Number	Capacitance		Attenuation	
	nF/km (nanofarad/mile)		dB/km (decibel/mile)	
	Initial	Final	Initial	Final
1	_____	_____	_____	_____
3	_____	_____	_____	_____
5	_____	_____	_____	_____
7	_____	_____	_____	_____
9	_____	_____	_____	_____
11	_____	_____	_____	_____
13	_____	_____	_____	_____
15	_____	_____	_____	_____
17	_____	_____	_____	_____
19	_____	_____	_____	_____
21	_____	_____	_____	_____
23	_____	_____	_____	_____
25	_____	_____	_____	_____
Average $\bar{x}$	_____	_____	_____	_____

Overall Percent Difference in Average $\bar{x}$ Capacitance:_____ Conductance:_____

Environmental Conditioning_____

FREQUENCY 772 KILOHERTZ

Pair Number	Capacitance		Attenuation	
	nF/km (nanofarad/mile)		dB/km (decibel/mile)	
	Initial	Final	Initial	Final
1	_____	_____	_____	_____
3	_____	_____	_____	_____
5	_____	_____	_____	_____
7	_____	_____	_____	_____
9	_____	_____	_____	_____
11	_____	_____	_____	_____
13	_____	_____	_____	_____
15	_____	_____	_____	_____
17	_____	_____	_____	_____
19	_____	_____	_____	_____
21	_____	_____	_____	_____
23	_____	_____	_____	_____
25	_____	_____	_____	_____
Average $\bar{x}$	_____	_____	_____	_____

Overall Percent Difference in Average $\bar{x}$ Capacitance:_____ Conductance:_____

Environmental Conditioning_____

WATER IMMERSION TEST (1 KILOHERTZ)

Pair Number	Capacitance		
	nF/km (nanofarad/mile)		
	Initial	24 Hours	Final
1	_____	_____	_____
3	_____	_____	_____
5	_____	_____	_____
7	_____	_____	_____
9	_____	_____	_____
11	_____	_____	_____
13	_____	_____	_____
15	_____	_____	_____
17	_____	_____	_____
19	_____	_____	_____
21	_____	_____	_____
23	_____	_____	_____
25	_____	_____	_____
Average $\bar{x}$	_____	_____	_____

Overall Percent Difference in Average $\bar{x}$ _____

Water Penetration Test

	Option A		Option B	
	End Leakage grams	Weight Gain grams	End Leakage grams	Penetration mm (in.)
Control.				
Heat Age.				
Humidity Exposure.				
Temperature Cycling.				

Insulation Compression

	Failures
Control	_____
Heat Age	_____
Humidity Exposure	_____
Temperature Cycling	_____

Jacket Slip Strength @ 50° C

	Load in newtons (pound-force)
Control	_____

Jacket Slip Strength @ 50° C—Continued

	Load in newtons (pound-force)
Heat Age	_____
Humidity Exposure	_____
Temperature Cycling	_____

Filler Exudation (grams)

Heat Age	_____
Humidity Exposure	_____
Temperature Cycle	_____

Surge Test (kilovolts)

Conductor to Conductor	_____
Shield to Conductors	_____

[58 FR 29338, May 20, 1993; 58 FR 32749, June 11, 1993; as amended at 60 FR 1711, Jan. 5, 1995]

§§1755.391—1755.396 [Reserved]

§1755.397 RUS performance specification for line concentrators.

(a) *General.* (1) This section covers general requirements for a line concentrator (LC) system. This system shall operate in accordance with the manufacturer's specifications. Reliability shall be of prime importance in the design, manufacture and installation of the equipment. The equipment shall automatically provide for:

(i) Terminating subscriber lines at a location remote from the serving central office;

(ii) Concentrating the subscriber lines over a few transmission and supervisory paths to the serving central office; and

(iii) Terminating the lines at the central office without loss of individual identity. A subscriber connected to a line concentrator shall be capable of having essentially the same services as a subscriber connected directly to the central office equipment (COE). Intra-unit calling among subscribers connected to the concentrator may be provided, but is not required.

(2) Industry standards, or portions thereof, referred to in this paragraph (a) are incorporated by reference by RUS. This incorporation by reference was approved by the Director of the Federal Register in accordance with 5 U.S.C. 552 (a) and 1 CFR part 51. Copies of these standards are available for inspection during normal business hours at RUS, room 2838, U.S. Department of Agriculture, Washington, DC 20250 or at the Office of the Federal Register, 800 North Capitol Street, NW., suite 700, Washington, DC.

(3) American National Standards Institute (ANSI) standards are available from ANSI Inc., 11 West 42nd Street, 13th floor, New York, NY 10036, telephone 212–642–4900.

(i) ANSI Standard S1.4–1983, Specification for Sound Level Meters, including Amendment S1.4A–1985.

(ii) [Reserved]

(4) American Society for Testing Materials (ASTM) are available from 1916 Race Street, Philadelphia, PA 19103, telephone 215–299–5400.

(i) ASTM Specification B33–91, Standard Specifications for Tinned Soft or Annealed Copper Wire for Electrical Purposes.

(ii) [Reserved]

(5) Bell Communications Research (Bellcore) standards are available from Bellcore Customer Service, 8 Corporate Place, Piscataway, NJ 08854, telephone 1–800–521–2673.

(i) TR–TSY–000008, Issue 2, August 1987, Digital Interface between the SLC 96 Digital Loop Carrier System and a Local Digital Switch.

(ii) Bell Communications Research (Bellcore) document TR–TSY–000057, Issue 1, April 1987, including Revision 1, November 1988, Functional Criteria for Digital Loop Carrier Systems.

(iii) Bell Communications Research (Bellcore) Document TR–NWT–000303, Issue 2, December 1992, including Revision 1, December 1993, Integrated Digital Loop Carrier System Generic Requirements, Objectives, and Interface.

(6) Federal Standard H28, Screw-Thread Standards for Federal Services, March 31, 1978, including Change Notice 1, May 28, 1986; Change Notice 2, January 20, 1989; and Change Notice 3, March 12, 1990. Copies may be obtained from the General Services Administration, Specification Section, 490 East L'Enfant Plaza SW, Washington, DC 20407, telephone 202–755–0325.

(7) IEEE standards are available from IEEE Service Center, 445 Hoes Lane,

P.O. Box 1331, Piscataway, NJ 08854, telephone 1–800–521–2673.

(i) IEEE Standard 455–1985, Standard Test Procedure for Measuring Longitudinal Balance of Telephone Equipment Operating in the Voice Band.

(ii) [Reserved]

(8) RUS standards are available from Publications and Directives Management Branch, Administrative Services Division, Rural Utilities Service, room 0180, South Building, U.S. Department of Agriculture, Washington, DC 20250–1500.

(i) RUS Bulletin 345–50, PE–60 (Sept 1979), RUS Specification for Trunk Carrier Systems.

(ii) [Reserved]

(b) *Types of requirements.* (1) Unless otherwise indicated, the requirements listed in this section are considered to be fixed requirements.

(2) The concentrator system shall communicate with standard T1 digital transmission format at a minimum between the concentrator and central office terminals. Analog conversion functions at remote and central office terminals shall be capable of being eliminated to accommodate end-to-end digital transmission.

(3) The LC shall operate properly as an integral part of the telephone network when connected to physical or carrier derived circuits and central offices meeting RUS specifications and other generally accepted telecommunications practices, such as Bellcore documents TR–NWT–000303, Integrated Digital Loop Carrier System Generic Requirements, Objectives and Interface; TR–TSY–000008, Digital Interface between the SLC 96 Digital Loop Carrier System and a Local Digital Switch; and TR–TSY–000057, Functional Criteria for Digital Loop Carrier Systems.

(4) For RUS acceptance consideration of a LC, the manufacturer must certify and demonstrate that all requirements specified in this section are available and in compliance with this section.

(5) Certain requirements are included in this section for features which may not be needed for every application. Such features are identifiable by the inclusion in the requirements of some such phrase as ''when specified by the owner'' or ''as specified by the owner.'' In some cases where an optional feature will not be required by an owner, either now or in the future, a system which does not provide this feature shall be considered to be in compliance with the specification for the specific installation under consideration, but not in compliance with the entire specification.

(6) The owner may properly request bids from any supplier of an RUS accepted LC whose system provides all the features which will be required for a specific installation.

(7) When required by the owner, the supplier shall state compliance to the Carrier Serving Area (CSA) requirements, as stated in Bell Communications Research (Bellcore) Standard TR–TSY–000057, Functional Criteria for Digital Loop Carrier Systems.

(c) *Reliability.* (1) The failure rate of printed circuit boards shall not exceed an average of 2.0 percent per month of all equipped cards in all system terminals during the first 3 months after cutover, and shall not exceed an average of 1.0 percent per month of all equipped cards in all system terminals during the second 3-month period. The failure rate for the equipment shall be less than 0.5 percent per month of all equipped cards in all system terminals after 6 months. A failure is considered to be the failure of a component on the PC board which requires it to be repaired or replaced.

(2) The line concentrator terminal units shall be designed such that there will be no more than 4 hours of total outages in 20 years.

(d) *System type acceptance tests.* General test results will be required on each system type. Any system provided in accordance with this section shall be capable of meeting any requirement in this section on a spot-check basis.

(e) *Features required.* The network control equipment and peripheral equipment shall be comprised of solid-state and integrated circuitry components as far as practical and in keeping with the state-of-the-art and economics of the subject system.

(f) *Subscriber lines*—(1) *General.* (i) The remote LC units shall operate satisfactorily with subscriber lines which meet all of the conditions under the bidder's specifications and all the requirements

of this section. This section recognizes that the loop limit of the line concentrator is dependent upon the transmission facility between the LC central office termination and the LC remote unit. When voice frequency (physical) circuits are used, the loop limit from the COE to the subscriber shall be 1900 ohms (including the telephone set). When electronically derived circuits (carrier, lightwave, etc.) are used, the loop limits of the electronic system will control. The bidder shall identify the loop limits of the equipment to be supplied.

(ii) There should be provisions for such types of lines as ground start, loop start, regular subscriber, pay stations, etc.

(2) *Dialing.* (i) *General.* The line concentrator remote and central office terminal equipment shall satisfactorily transmit dialing information when used with subscriber dials having a speed of operation between 8 and 12 dial pulses per second and a break period of 55 to 65% of the total signaling period.

(ii) *Subscriber dial interdigital time.* The remote and central office LC equipment shall permit satisfactory telecommunications operation when used with subscriber rotary dial interdigital times of 200 milliseconds minimum, and pushbutton dialing with 50 milliseconds minimum.

(iii) *Subscriber line pushbutton dialing frequencies.* The frequency pairs assigned for pushbutton dialing when provided by the central office shall be as listed in this paragraph (f)(2)(iii), with an allowable variation of ±1.5 percent:

Low group frequencies (Hz)	High group frequencies (Hz)			
	1209	1336	1477	1633
697	1	2	3	Spare.
770	4	5	6	Spare.
852	7	8	9	Spare.
941	*	0	#	Spare.

(3) *Ringing.* (i) When LC ringing is generated at the remote end, it shall be automatic and intermittent and shall be cut off from the called line upon removal of the handset at the called station during either the ringing or silent period.

(ii) When ringing generators are provided in the LC on an ancillary basis, they shall be accepted or technically accepted by RUS.

(iii) Where ringing is generated at the remote end, the ringing system shall provide sufficient ringing on a bridged basis over the voltage and temperature limits of this specification and over subscriber loops within the limits stated by the manufacturer. The manufacturer shall state the minimum number (not less than two) of main station ringers that can be used for each ringing option available.

(g) *Traffic.* (1)(i) The minimum grade of service for traffic in the line concentrator shall be B=.005 using the Traffic Table, based on the Erlang Lost-Calls-Cleared Formula. Required grade of service, traffic assumptions and calculations for the particular application being implemented shall be supplied by the bidder.

(ii) Service to customers served by a traffic sensitive LC should not be noticeably different than the service to customers served by the dedicated physical pairs from the central office so that uniform grade of service will be provided to all customers in any class of service. Reference § 1755.522(p)(1)(i), RUS General Specification for Digital, Stored Program Controlled Central Office Equipment.

(2) *Traffic and Plant Registers.* Traffic measurements consist of three types—peg count, usage, and congestion. A peg count register scores one count per call attempt per circuit group such as trunks, digit receivers, senders, etc. Usage counters measure the traffic density in networks, trunks and other circuit groups. Congestion registers score the number of calls which fail to find an idle circuit in a trunk group or to find an idle path through the switching network when attempting to connect two given end points. These conditions constitute ''network blocking.''

(3) When required, traffic data will be stored in electronic storage registers or a block of memory consisting of one or more traffic counters for each item to be measured. The bidder shall indicate what registers are to be supplied, their purpose and the means for displaying the information locally (or at a remote location when available).

(h) *Transmission requirements.* (1) *General.* Unless otherwise stated, the requirements in paragraphs (h) (2) through (20) of this section are specified in terms of analog measurements made from Main Distributing Frame (MDF) terminals to MDF terminals excluding cabling loss.

(2) *Telephone transmitter battery supply.* A minimum of 20 milliamperes, dc, shall be provided for the transmitter of the telephone set at the subscriber station under all loop conditions specified by the bidder. The telephone set is assumed to have a resistance of 200 ohms.

(3) *Impedance—subscriber loops.* For the purpose of this section, the input impedance of all subscriber loops served by the equipment is arbitrarily considered to be 900 ohms in series with 2.16 microfarad capacitor at voice frequencies.

(4) *Battery noise.* Noise across the remote terminal battery at power panel distribution bus terminals shall not exceed 35 dBrnC during the specified busy hour.

(5) *Stability.* The long-term allowable variation in loss through the line concentrator system shall be ±0.5 dB from the loss specified by the bidder.

(6) *Return loss.* The specified return loss values are determined by the service and type of port at the measuring end. Two-wire ports are measured at 900 ohms in series with 2.16 microfarads, and 4-wire ports are measured at 600 ohms resistive. When other balance networks are supplied, test equipment arranged for operation with the supplied network(s) may be used. The requirement given shall meet the following cited values on each balance network available in the system:

Line-to-Line or Line-to-Trunk (2–Wire)
Echo Return Loss (ERL)—18 dB, Minimum
Singing Return Loss (SRL)—Low—15 dB, Minimum
Singing Return Loss (SRL)—High—18 dB, Minimum

(7) *Longitudinal balance.* The minimum longitudinal balance, with dc loop currents between 20 to 70 mA, shall be 60 dB at all frequencies between 60 and 2000 Hz, 55 dB at 2700 Hz and 50 dB at 3400 Hz. The method of measurement shall be as specified in the IEEE standard 455, ''Standard Testing Procedure for Measuring Longitudinal Balance of Telephone Equipment Operating in the Voice Band.'' Source voltage level shall be 10 volts root mean square (rms) where conversation battery feed originates at the remote end.

(8) *60 hz longitudinal current immunity.* The LC 60 Hz longitudinal current immunity shall be measured in accordance with Figure 1 of this section. Under test conditions cited on Figure 1 of this section, the system noise shall be 23 dBrnC or less as follows:

Figure 1

Measuring the Effects of Low Frequency Induction

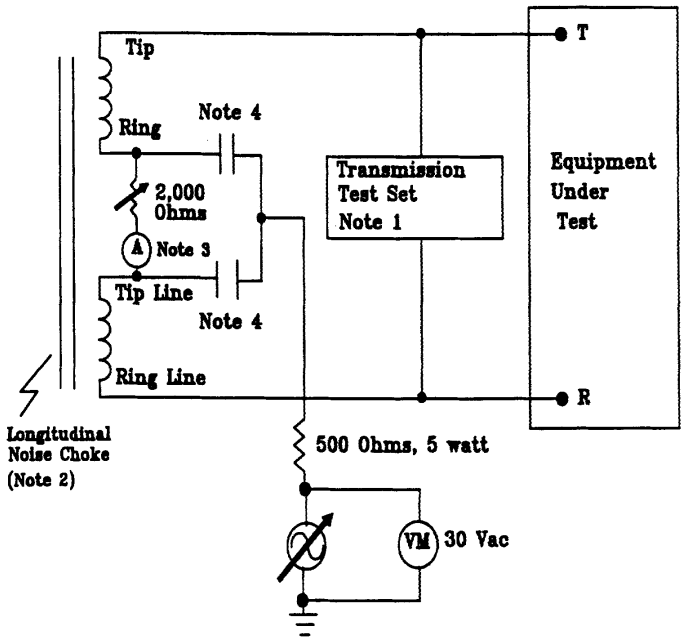

Notes:

1. Wilcom T194C or Equivalent (900 ohm termination, C-message weighting, hold coil off)
2. SNC Noise Choke 35 W, or equivalent
3. Test at 0.020 Adc and 0.070 Adc
4. 2 ± 0.001 microfarad, 150 Vdc

(9) *Steady noise (idle channel at 900 ohm impedance).* Steady noise: Measure on terminated call. Noise measurements shall comply with the following:

Maximum—23 dBrnC0
Average—18 dBrnC0 or Less
3KHz Flat—Less than 35 dBrnO as an Objective

(10) *Impulse noise.* LC central office terminal equipment shall have an impulse noise limit of not more than five counts exceeding 54 dBrnC0 voice band weighted in a 5-minute period on six such measurements made during the busy hour. A WILCOM T–194C Transmission Test Set, or equivalent, should be used for the measurements. The

measurement shall be made by establishing a normal connection from the noise counter through the switching equipment in its off-hook condition to a quiet termination of 900 ohms impedance. Office battery and signaling circuit wiring shall be suitably segregated from voice and carrier circuit wiring, and frame talking battery filters provided, if and as required, in order to meet these impulse noise limits.

(11) *Crosstalk coupling.* Worst case equal level crosstalk shall be 65 dB minimum in the range 200 to 3400 Hz. This shall be measured between any two paths through the system by connecting a 0 dBm0 level tone to the disturbing pair.

(12) *Digital error rate.* The digital line concentrator shall not introduce more than one error in 10^8 bits averaged over a 5-minute period, excluding the least significant bit.

(13) *Quantizing distortion.* (i) The system shall meet the following requirements:

Input level (dBm0) 1004 or 1020 Hz	Minimum signal to distortion with C-message weighting
0 to −30	33 dB
−30 to −40	27 dB
−40 to −45	22 dB

(ii) Due to possible loss of the least significant bit on direct digital connections, a signal to distortion degradation of up to 2 dB may be allowed where adequately justified by the bidder.

(14) *Overload level.* The overload level shall be +3 dBm0.

(15) *Gain tracking (linearity)* shall meet the following requirements:

Input signal level [1]	Maximum gain deviation
+3 to −37 dBm0	±0.5 dB
−37 to −50 dBm0	±1 dB

[1] 1004 Hz reference at 0 dBm0.

(16) *Frequency response (loss relative to 1004 Hz)* for line-to-line (via trunk group or intra-link) connections shall meet the following requirements:

Frequency (Hz)	Loss at 0 dBm0 input [1]
60	20 dB Min.[2]
300	−1 to +3 dB
600 to 2400	+1 dB
3400	−1 to +3 dB

[1] (−) means less loss and (+) means more loss.
[2] Transmit End.

(17) *Envelope delay distortion.* On any properly established connection, the envelope delay distortion shall not exceed the following limits:

Frequency (Hz)	Microseconds
1000 to 2600	190
800 to 2800	350
600 to 3000	500
400 to 3200	700

(18) *Absolute delay.* The absolute one-way delay through the line concentrator, excluding delays associated with the central office switching equipment, shall not exceed 1000 microseconds analog-to-analog measured at 1800 Hz.

(19) *Insertion loss.* The insertion loss in both directions of transmission at 1004 Hz shall be included in the insertion loss requirements for the connected COE switch and shall not increase the overall losses through the combined equipment beyond the values for the COE alone, when operated through a direct digital interface. Systems operated with a (VF) line circuit interface may introduce up to 3 dB insertion loss. Reference § 1755.522(q)(3).

(20) *Detailed requirements for direct digital connections.* (i) This paragraph (h)(20) covers the detailed requirements for the provision of interface units which will permit direct digital connection between the host central office and line concentrator subscriber terminals over digital facilities. The digital transmission system shall be compatible with T1 type span lines using a DS1 interface and other digital interfaces that may be specified by the owner. The RUS specification for the T1 span line equipment is PE–60. Other span line techniques may also be used. Diverse span line routing may be used when specified by the owner.

(ii) The output of a digital-to-digital port shall be Pulse Code Modulation (PCM), encoded in eight-bit words using the mu–255 encoding law and D3 encoding format, and arranged to interface with a T1 span line.

(iii) Signaling shall be by means of Multifrequency (MF) or Dual Pulsing

(DP) and the system which is inherent in the A and B bits of the D3 format. In the case where A and B bits are not used for signaling or system control, these bits shall only be used for normal voice and data transmission.

(iv) When a direct digital interface between the span line and the host central office equipment is to be implemented, the following requirements shall be met:

(A) The span line shall be terminated in a central office as a minimum a DS1 (1.544Mb/s) shall be provided;

(B) The digital central office equipment shall be programmed to support the operation of the digital port with the line concentrator subscriber terminal;

(C) The line concentrator subscriber terminal used with a direct digital interface shall be interchangeable with the subscriber terminal used with a central office terminal.

(i) *Alarms.* The system shall send alarms for such conditions as blown fuses, blocked controls, power failure in the remote terminal, etc., along with its own status indication and status of dry relay contact closures or solid-state equivalent to the associated central office alarm circuits. Sufficient system alarm points shall be provided from the remote terminal to report conditions to the central office alarm system. The alarms shall be transmitted from the remote terminal to the central office terminal as long as any part of the connecting link is available for this transmission. Fuses shall be of the alarm and indicator type, and their rating designated by numerals or color code on fuse positions.

(j) *Electrical protection*—(1) *Surge protection.* (i) Adequate electrical protection of line concentrator equipment shall be included in the design of the system. The characteristics and application of protection devices must be such that they enable the line concentrator equipment to withstand, without damage or excessive protector maintenance, the dielectric stresses and currents that are produced in line-to-ground and tip-to-ring circuits through the equipment as a result of induced or conducted lightning or power system fault-related surges. All wire terminals connected to outside plant wire or cable pairs shall be protected from voltage and current surges.

(ii) Equipment must pass laboratory tests, simulating a hostile electrical environment, before being placed in the field for the purpose of obtaining field experience. For acceptance consideration RUS requires manufacturers to submit recently completed results (within 90 days of submittal) of data obtained from the prescribed testing. Manufacturers are expected to detail how data and tests were conducted. There are five basic types of laboratory tests which must be applied to exposed terminals in an effort to determine if the equipment will survive. Figure 2 of this section, Summary of Electrical Requirements and Tests, identifies the tests and their application as follows:

FIGURE 2.—SUMMARY OF ELECTRICAL REQUIREMENTS AND TESTS

Test	Application criteria	Peak voltage or current	Surge waveshape	Number of applications and maximum time between	Comments
Current surge	Low impedance paths exposed to surges.	500A or lesser current (see fig. 4).	10×1000 µs	5 each polarity at 1 minute intervals.	None.
60 Hz current carrying	High or low impedance paths exposed to surges.	10A rms or lesser current (see fig. 6).	11 Cycles of 60 Hz (0.183 Sec.).	3 each at 1 minute intervals	None.
AC Power service surge voltage.	AC power service connection	2500V or +3 σ clamping V of arrester employed at 10kV/µs.	1.2×50 µs	5 each polarity at 1 minute intervals.	AC arrester, if used, must be removed. Communications line arresters, if used, remain in place.
Voltage surge	High impedance paths exposed to surges.	1000V or +3 σ dc breakdown of arrester employed.	10×1000 µs	5 each polarity at 1 minute intervals.	All primary arresters, if used, must be removed.
Arrester response delay	Paths protected by arresters, such as gas tubes, with breakdown dependent on V. rate of rise.	+3 σ breakdown of arrester employed at 100V/µs of rise.	100V/µs rise decay to ½ V. in tube's delay time.	5 each polarity at 1 minute intervals.	All primary arrestors, if used, must be removed.

(iii) Electrical protection requirements for line concentrator equipment can be summarized briefly as follows:

(A) Current surge tests simulate the stress to which a relatively low impedance path may be subjected before main frame protectors break down. Paths with a 100 Hz impedance of 50 ohms or less shall be subjected to current surges, employing a 10 x 1000 microsecond waveshape as defined in Figure 3 of this section, Surge Waveshape. For the purpose of determining this impedance, arresters which are mounted within the equipment are to be considered zero impedance. The crest current shall not exceed 500A; however, depending on the impedance of the test specimen this value of current may be lower. The crest current through the sample, multiplied by the sample's 100 Hz impedance, shall not exceed 1000 V. Where sample impedance is less than 2 ohms, peak current shall be limited to 500A as shown in Figure 4 of this section, Current Surge Tests. Figures 3 and 4 follow:

Figure 3

Explanation of Surge Waveshape

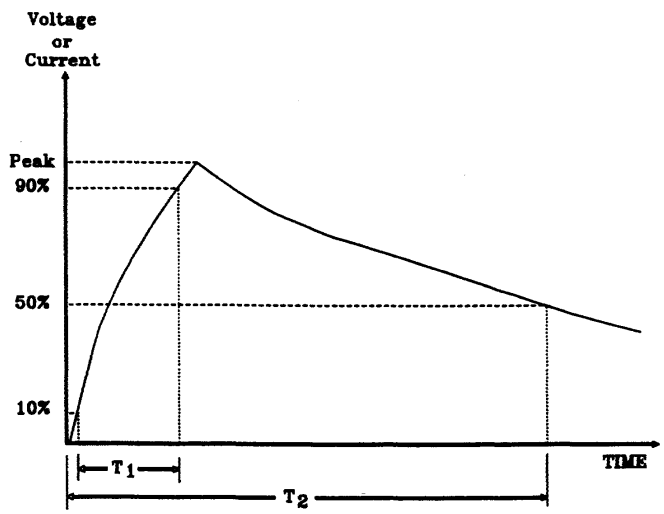

Surge Waveshape is defined as follows:

Rise Time x Time to Decay to Half Crest Value
(For example, 10 x 1000 μs)

Notes: T_1 = Time to determine the rate of rise. The rate of rise is determined as the slope between 10% and 90% of peak voltage or current.

T_2 = Time to 50% of peak voltage (decay to half value).

Figure 4

Current Surge Test

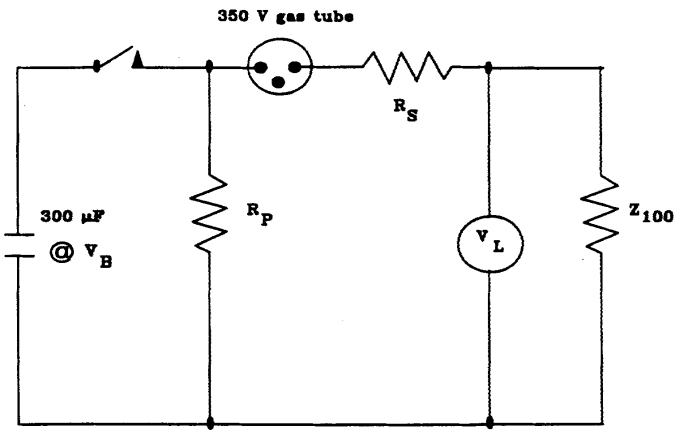

V_L = Not to exceed 1000V
V_B = Charging Voltage
Z_{100} = Test Specimen Impedance to be measured at 100 Hz.
R_P = Parallel Resistance (Waveshape)
R_S = Series Resistance (Current Limiting)

Z_{100}	R_S	R_P	V_B
0	5	∞	2500
1	4	∞	2500
2	3	∞	2500
3	2	∞	1670
4	1	∞	1250
5	0	∞	1000
7.5	0	15	1000
10	0	10	1000
15	0	7.5	1000
20	0	6.7	1000
25	0	6.25	1000
30	0	6	1000
40	0	5.7	1000
50	0	5.5	1000

(B) Sixty Hertz (60 Hz) current carrying tests shall be applied to simulate an ac power fault which is conducted to the unit over the cable pairs. The test shall be limited to 10 amperes Root Mean Square (rms) of 60 Hz ac for a period of 11 cycles (0.1835 seconds) and shall be applied longitudinally from line to ground.

(C) AC power service surge voltage tests shall be applied to the power input terminals of ac powered devices

to simulate switching surges or lightning-induced transients on the ac power system. The test shall employ a 1.2 x 50 microsecond waveshape with a crest voltage of 2500 V. Communications line protectors may be left in place for these tests.

(D) Voltage surge tests which simulate the voltage stress to which a relatively high impedance path may be subjected before primary protectors break down and protect the circuit. To ensure coordination with the primary protection while reducing testing to the minimum, voltage surge tests shall be conducted at a 1000 volts with primary arresters removed for devices protected by carbon blocks, or the +3 sigma dc breakdown voltage of other primary arresters. Surge waveshape should be 10 x 1000 microseconds.

(E) Arrester response delay tests are designed to stress the equipment in a manner similar to that caused by the delayed breakdown of gap type arresters when subjected to rapidly rising voltages. Arresters shall be removed for these tests, the peak surge voltage shall be the +3 sigma breakdown voltage of the arrester in question on a voltage rising at 100 V per microsecond, and the time for the surge to decay to half voltage shall equal at least the delay time of the tube as explained in Figure 5 of this section, Arrester Response Delay Time as follows:

Figure 5

Explanation of Arrester Response Delay Time

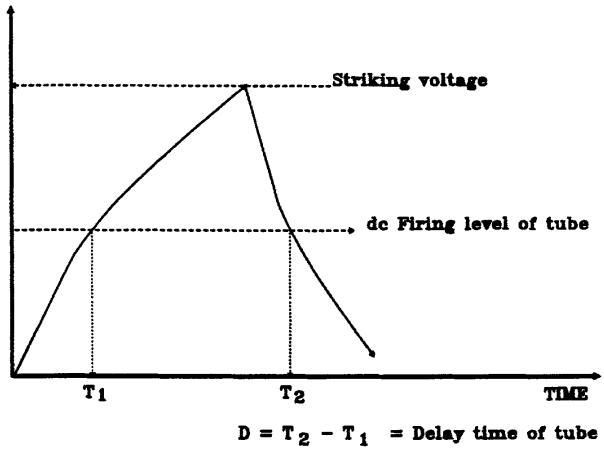

Note: The delay time is that period of time when the potential across an arrester exceeds its dc firing level.

(iv) Tests shall be conducted in the following sequence. As not all tests are required in every application, non-applicable tests should be omitted:

(A) Current Impulse Test;

(B) Sixty Hertz (60 Hz) Current Carrying Tests;

(C) AC Power Service Impulse Voltage Test;

(D) Voltage Impulse Test; and

(E) Arrester Response Delay Time Test.

(v) A minimum of five applications of each polarity for the surge tests and three for the 60 Hz Current Carrying Tests are the minimum required. All tests shall be conducted with not more than 1 minute between consecutive applications in each series of three or five applications to a specific configuration so that heating effects will be cumulative. See Figure 6 of this section, 60 Hz Current Surge Tests as follows:

Figure 6

60 Hz Current Surge Test

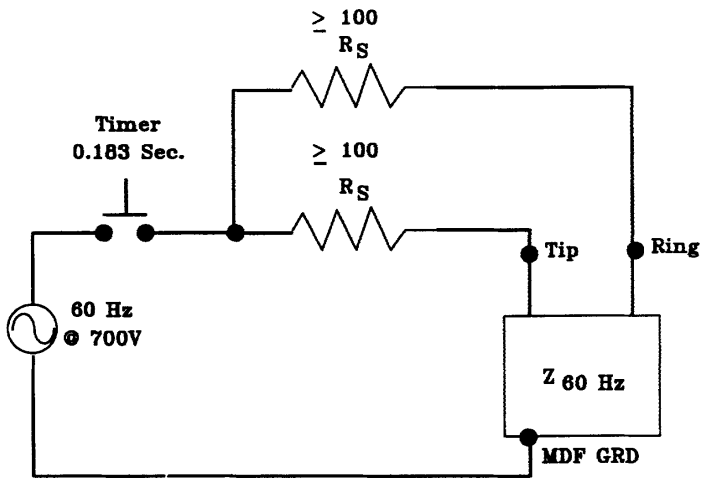

V - 700 Volts root mean square (rms) (Approximately 1000V Peak).

Z_{60} - Test specimen impedance to be measured at 60 Hz.

R_S - Series Resistance (current limiting) in each side of line. (Source impedance never less than 50 Ω longitudinal.)

$Z_{60\ Hz}$	R_S
0	140
10	120
20	100
50	100
Over 50	100

(vi) Tests shall be applied between each of the following terminal combinations for all line operating conditions:

(A) Line tip to ring;

(B) Line ring to ground;

(C) Line tip to ground; and

(D) Line tip and ring tied together to ground.

(2) *Dielectric strength*. (i) Arresters shall be removed for all dielectric strength tests.

(ii) Direct current potentials shall be applied between all line terminals and the equipment chassis and between these terminals and grounded equipment housings in all instances where the circuitry is dc open circuit from the chassis, or connected to the chassis through a capacitor. The duration of all dielectric strength tests shall be at least 1 second. The applied potential shall be at a minimum equal to the plus 3 sigma dc breakdown voltage of the arrester, provided by the line concentrator manufacturer.

(3) *Insulation resistance*. Following the dielectric tests, the insulation resistance of the installed electrical circuits between wires and ground, with the normal equipment grounds removed, shall not be less than 10 megohms at 500 volts dc at a temperature of 68 °F (20 °C) and at a relative humidity of approximately 50 percent. The measurement shall be made after the meter stabilizes, unless the requirement is met sooner. Arresters shall be removed for these tests.

(4) *Self-protection*. (i) All components shall be capable of being continuously energized at rated voltage without injury. Design precautions must be taken to prevent damage to other equipment components when a particular component fails.

(ii) Printed circuit boards or similar equipment employing electronic components should be self-protecting against external grounds applied to the connector terminals. Board components and coatings applied to finished products shall be of such material or so treated that they will not support combustion.

(iii) Every precaution shall be taken to protect electrostatically sensitive components from damage during handling. This shall include written instructions and recommendations.

(k) *Miscellaneous*—(1) *Interconnect wire*. All interconnect wire shall be of soft annealed tinned copper wire meeting the requirements of ASTM Specification B33–91 and of suitable cross-section to provide safe current carrying capacity and mechanical strength. The insulation of installed wire, connected to its equipment and frames, shall be capable of withstanding the same insulation resistance and dielectric strength requirements as given in paragraphs (j)(2) and (j)(3) of this section at a temperature of 120°F (49°C), and a relative humidity of 90 percent.

(2) *Wire wrapped terminals*. These terminals are preferred and where used shall be of a material suitable for wire wrapping. The connections to them shall be made with a wire wrapping tool with the following minimum number of successive non-overlapping turns of bare tinned copper wire in contact with each terminal:

(i) 6 turns of 30 gauge;

(ii) 6 turns of 26 gauge;

(iii) 6 turns of 24 gauge; or

(iv) 5 turns of 22 gauge.

(3) *Protection against corrosion*. All metal parts of equipment frames, distributing frames, cable supporting framework and other exposed metal parts shall be constructed of corrosion resistant materials or materials plated or painted to render them adequately corrosion resistant.

(4) *Screws and bolts*. Screw threads for all threaded securing devices shall be of American National Standard form in accordance with Federal Standard H28, unless exceptions are granted to the manufacturer of the switching equipment. All bolts, nuts, screws, and washers shall be of nickel-copper alloy, steel, brass or bronze.

(5) *Environmental requirements*. (i) The bidder shall specify the environmental conditions necessary for safe storage and satisfactory operation of the equipment being bid. If requested, the bidder shall assist the owner in planning how to provide the necessary environment for the equipment.

(ii) To the extent practicable, the following temperature range objectives shall be met:

(A) For equipment mounted in central office and subscriber buildings, the carrier equipment shall operate satisfactory within an ambient temperature range of 32 °F to 120 °F (0 °C to 49 °C) and at 80 percent relative humidity between 50 °F and 100 °F (10 °C and 38 °C); and

(B) Equipment mounted outdoors in normal operation (with cabinet doors closed) shall operate satisfactorily within an ambient temperature range (external to cabinet) of −40 °F to 140 °F (−40 °C to 60 °C) and at 95 percent relative humidity between 50 °F to 100 °F (10 °C to 38 °C). As an alternative to the (60 °C) requirement, a maximum ambient temperature of 120 °F (49 °C) with equipment (cabinet) exposed to direct sunlight may be substituted.

(6) *Stenciling.* Equipment units and terminal jacks shall be adequately designated and numbered. They shall be stenciled so that identification of equipment units and leads for testing or traffic analysis can be made without unnecessary reference to prints or descriptive literature.

(7) *Quantity of equipment bays.* Consistent with system arrangements and ease of maintenance, space shall be provided on the floor plan for an orderly layout of future equipment bays. Readily accessible terminals will be provided for connection to interbay and frame cables to future bays. All cables, interbay and intrabay (excluding power), if technically feasible, shall be terminated at both ends by connectors.

(8) *Radio and television interference.* Measures shall be employed by the bidders to limit the radiation of radio frequencies generated by the equipment so as not to interfere with radio, television receivers, or other sensitive equipment.

(9) *Housing.* (i) When housed in a building supplied by the owner, a complete floor plan including ceiling height, floor loading, power outlets, cable entrances, equipment entry and travel, type of construction, and other pertinent information shall be supplied.

(ii) In order to limit corrosion, all metal parts of the housing and mounting frames shall be constructed of suitable corrosion resistant materials or materials protectively coated to render them adequately resistant to corrosion under the climatic and atmospheric conditions existing in the area in which the housing is to be installed.

(10) *Distributing frame.* (i) The line concentrator terminal equipment located at the central office shall be protected by the central office main distribution frame. The bidder may supply additional protection capability as appropriate. All protection devices (new or existing) shall be arranged to operate in a coordinated manner to protect equipment, limit surge currents, and protect personnel.

(ii) The distributing frame shall provide terminals for terminating all incoming cable pairs. Arresters shall be provided for all incoming cable pairs, or for a smaller number of pairs if specified.

(iii) The current carrying capacity of each arrester and its associated mounting shall coordinate with a #22 gauge copper conductor without causing a self-sustaining fire or permanently damaging other arrester positions. Where all cable pairs entering the housing are #24 gauge or finer, the arresters and mountings need only coordinate with #24 gauge cable conductors.

(iv) Remote terminal protectors may be mounted and arranged so that outside cable pairs may be terminated on the left or bottom side of protectors (when facing the vertical side of the MDF) or on the back surface of the protectors. Means for easy identification of pairs shall be provided.

(v) Protectors shall have a ''dead front'' (either insulated or grounded) where live metal parts are not readily accessible.

(vi) Protectors shall be provided with an accessible terminal of each incoming conductor which is suitable for the attachment of a temporary test lead. They shall also be constructed so that auxiliary test fixtures may be applied to open and test the subscriber's circuit in either direction. Terminals shall be suitable for wire wrapped connections or connectorized.

(vii) If specified, each protector group shall be furnished with a factory assembled tip cable for splicing to the outside cable; the tip cable shall be 20 feet (6.1 m) in length, unless otherwise

specified. Tip cable used shall be RUS accepted.

(viii) Protector makes and types used shall be RUS accepted.

(l) *Power equipment*—(1) *General.* When specified, batteries and charging equipment shall be supplied for the remote terminal of the line concentrator.

(2) *Operating voltage.* (i) The nominal operating voltage of the central office and remote terminal shall be 48 volts dc, provided by a battery with the positive side tied to system ground.

(ii) Where equipment is dc powered, it must operate satisfactorily over a range of 50 volts ± 6 volts dc.

(iii) Where equipment is ac powered, it must operate satisfactorily over a range of 120±10 volts or 220±10 volts ac.

(3) *Batteries.* (i) Unless otherwise specified by the owner, sealed batteries shall be supplied for the remote line concentrator terminal.

(ii) The batteries shall have an ampere hour load capacity of no less than 8 busy hours. When an emergency ac supply source is available, the battery reserve may be reduced to 3 busy hours.

(iii) The batteries shall be sealed when they are mounted in the cabinet with the concentrator equipment.

(iv) When specified by the owner, battery heaters shall be supplied in a bidder-furnished housing.

(4) *Charging equipment.* (i) One charger capable of carrying the full dc power load of the remote terminal shall be supplied unless otherwise specified by the owner.

(ii) Charging shall be on a full float basis. The rectifiers shall be of the full wave, self-regulating, constant voltage, solid-state type and shall be capable of being turned on and off manually.

(iii) When charging batteries, the voltage at the battery terminals shall be adjustable and shall be set at the value recommended for the particular battery being charged, provided it is not above the maximum operating voltage of the central office switching equipment. The voltage shall not vary more than ±0.02 volt dc per cell between 10% load and 100% load. Between 3% and 10% load, the output voltage shall not vary more than ±0.04 volt dc per cell. Beyond full load current the output voltage shall drop sharply. The above output voltage shall be maintained with input line voltage variations of plus or minus 10 percent. Provision shall be made to manually change the output voltage of the rectifier to 2.25 volts per cell to provide an equalization charge on the battery.

(iv) The charger noise, when measured with a suitable noise measuring set and under the rated battery capacitance and load conditions, shall not exceed 22 dBrnC. See Figure 7 of this section, Charger Noise Test as follows:

Figure 7

Charger Noise Test

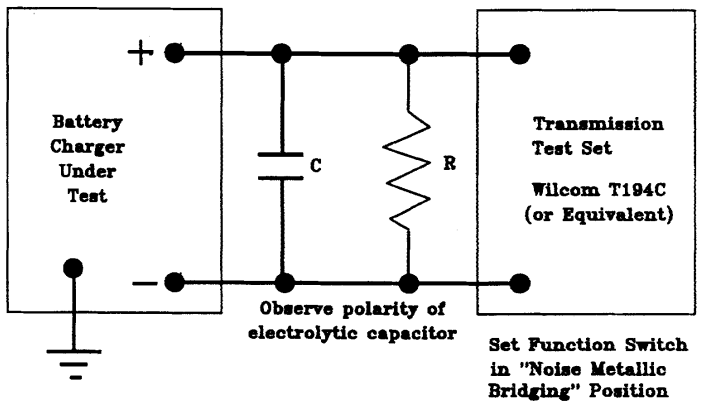

Note (1) The manufacturer may elect to eliminate the capacitor C from the measurement.

Capacitance C in μF = 30,000 μF per ampere-hour per cell. For example, 25 cells at 100 ampere-hour would be equivalent to a capacitance of:

$$(30{,}000 \times 100)/25 = 120{,}000\ \mu F$$

(2) The value of the resistive load R is determined by the nominal battery voltage in volts divided by the full load rating in amperes. For example, for a 48 volt battery and a full load current of 24 amperes, the load resistance R is 48/24 = 2 ohms of appropriate power handling capacity.

(v) The charging equipment shall be provided with a means for indicating a failure of charging current whether due to ac power failure, an internal failure in the charger, or to other circumstances which might cause the output voltage of the charger to drop below the battery voltage. Where a supplementary constant current charger is used, an alarm shall be provided to indicate a failure of the charger.

(vi) Audible noise developed by the charging equipment shall be kept to a minimum. Acoustic noise resulting from operation of the rectifier shall be expressed in terms of dB indicated on a sound level meter conforming to American National Standards Institute S1.4, and shall not exceed 65 dB (A-weighting) measured at any point 5 feet (1.5m) from any vertical surface of the rectifier.

(vii) The charging equipment shall be designed so that neither the charger nor the central office equipment is subject to damage in case the battery circuit is opened for any value of load within the normal limits.

(5) *Power panel.* (i) Battery and charger control switches, dc voltmeters, dc ammeters, fuses and circuit breakers, supervisory and timer circuits shall be provided as required. Portable or panel mounted frequency meters or voltmeters shall be provided as specified by the owner.

(ii) Power panels, cabinets and shelves, and associated wiring shall be designed initially to handle the line concentrator terminal when it reaches its ultimate capacity as specified by the owner.

(iii) The power panel shall be of the ''dead front'' type.

(6) *Ringing equipment.* The ringing system shall provide sufficient ringing on a bridged basis over the voltage and temperature limits of this section and over subscriber drops within the limits stated by the bidder. The ringing system shall be without operational problems such as bell tapping during dialing. The bidder shall state the minimum number (not less than two) of main station ringers that can be used for each ringing option available.

(7) *Interrupter equipment.* The interrupter may be an integral part of the system or may be part of the associated central office equipment connected to the line concentrator central office terminal.

(8) *Special systems.* Manufacturers of LC systems that operate by extending ringing current from the central office shall state their required input ringing (voltage and frequency) and the limitations on the connected subscriber loop.

(m) *Fusing requirements*—(1) *General.* (i) The equipment shall be completely wired and equipped with fuses, trouble signals, and all associated equipment for the wire capacity of the frames or cabinets provided.

(ii) Design precautions shall be taken to prevent the possibility of equipment damage arising from the insertion of an electronic package into the wrong connector or the removal of a package from any connector or improper insertion of the correct card in its connector.

(2) *Fuses.* Fuses and circuit breakers shall be of an alarm and indicator type, except where the fuse or breaker location is indicated on the alarm printout. Their rating shall be designated by numerals or color codes on the fuse or the panel.

(n) *Trouble location and test*—(1) *Equipment.* (i) Trouble indications in the system may be displayed in the form of lights on the equipment units or printed circuit boards.

(ii) When required, a jack or other connector shall be provided to connect a fault or trouble recorder (printer or display).

(2) *Maintenance system.* (i) The maintenance system shall monitor and maintain the system operation without interruption of call processing except for major failures.

(ii) The maintenance system shall be arranged to provide the ability to determine trouble to an individual card, functional group of cards, or other equipment unit.

(o) *Spare parts.* Lists of spare parts and maintenance tools as recommended by the bidder shall be provided. The cost of such tools and spare parts shall be indicated and shall not be included in the base price.

(p) *Drawings and printed material.* (1) The bidder shall supply instructional material for each line concentrator system involved at the time of delivery of the equipment. It is not the intent of this section to require system documentation necessary for the repair of individual circuit boards.

(2) Three complete sets of legible drawings shall be provided for each central office to be accessed. Each set shall include all of the following:

(i) Drawings of major equipment items such as frames, with the location of major component items of equipment shown therein;

(ii) Wiring diagrams indicating the specific method of wiring used on each item of equipment and interconnection wiring between items of equipment;

(iii) Maintenace drawings covering each equipment item that contains replaceable parts, appropriately identifying each part by name and part number; and

(iv) Job drawings including all drawings that are individual to the particular line concentrator involved such as mainframe, power equipment, etc.

(3) The following information shall also be furnished:

(i) A complete index of required drawings;

(ii) An explanation of electrical principles of operation of overall concentrator system;

(iii) A list of tests which can be made with each piece of test equipment furnished and an explanation of the method of making each test;

(iv) A sample of each form recommended for use in keeping records;

(v) The criteria for analyzing results of tests and determining appropriate corrective action;

(vi) A set of general notes on methods of isolating equipment faults to specific printed circuit cards in the equipment;

(vii) A list of typical troubles which might be encountered, together with general indications as to probable location of each trouble; and

(viii) All special line concentrator system grounding requirements.

(4) When installation is to be done by the bidder a complete set of drawings shall be provided by the owner, such as floor plans, lighting, grounding and ac power access.

(q) *Installation and acceptance*—(1) *General.* Paragraphs (q)(2)(i) through (q)(3)(xxi) of this section covers the general requirements for the installation of line concentrator equipment by the bidder, and outlines the general conditions to be met by the owner in connection with such installation work. The responsibilities apply in both the central office installation and remote terminal installations, unless otherwise noted.

(2) *Responsibilities of owner.* The owner shall:

(i) Allow the bidder and its employees free access to the premises and facilities at all hours during the progress of the installation;

(ii) Provide access to the remote site and any other site for development work needed during the installation;

(iii) Take such action as necessary to ensure that the premises are dry and free from dust and in such condition as not to be hazardous to the installation personnel or the material to be installed (not required when remote terminal is not installed in a building);

(iv) Provide heat or air conditioning when required and general illumination in rooms in which work is to be performed or materials stored;

(v) Provide suitable openings in buildings to allow material to be placed in position (not required when a remote terminal is not installed in a building);

(vi) Provide the necessary conduit and commercial and dc-ac inverter output power to the locations shown on the approved floor plan drawings;

(vii) Provide 110 volts a.c., 60 Hz commercial power equipped with a secondary arrester and a reasonable number of outlets for test, maintenance and installation equipment;

(viii) Provide suitable openings or channels and ducts for cables and conductors from floor to floor and from room to room;

(ix) Provide suitable ground leads, as designated by the bidder (not required when remote terminal is not installed in a building);

(x) Provide the necessary wiring, central office ground and commercial power service, with a secondary arrester, to the location of an exterior remote terminal installation based on the voltage and load requirements furnished voltage and load requirements furnished by the bidder;

(xi) Test at the owners expense all lines and trunks for continuity, leakage and loop resistance and ensure that all lines and trunks are suitable for operation with the central office and remote terminal equipment specified;

(xii) Make alterations and repairs to buildings necessary for proper installation of material, except to repair damage for which the bidder or its employees are responsible;

(xiii) Connect outside cable pairs on the distributing frame (those connected to protectors);

(xiv) Furnish all line, class of service assignment, and party line assignment information to permit bidder to program the data base memory within a reasonable time prior to final testing;

(xv) Release for the bidder's use, as soon as possible, such portions of the

existing plant as are necessary for the proper completion of such tests as require coordination with existing facilities including facilities for T1 span lines with properly installed repeaters between the central office and the remote terminal installations;

(xvi) Make prompt inspections as it deems necessary when notified by the bidder that the equipment, or any part thereof, is ready for acceptance;

(xvii) Provide adequate fire protection apparatus at the remote terminal, including one or more fire extinguishers or fire extinguishing systems of the gaseous type, that has low toxicity and effect on equipment;

(xviii) Provide necessary access ports for cable, if underfloor cabling is selected;

(xix) Install equipment and accessory plant devices mounted external to the central office building and external to the repeater and other outside housings including filters, repeater housings, splicing of repeater cable stubs, externally mounted protective devices and other such accessory devices in accordance with written instructions provided by the bidder; and

(xx) Make all cross connections (at the MDF or Intermediate Distribution Frame IDF) between the physical trunk or carrier equipment and the central office equipment unless otherwise specified in appendix A of this section.

(3) *Responsibilities of bidder.* The bidder shall:

(i) Allow the owner and its representatives access to all parts of the building at all times;

(ii) Obtain the owner's permission before proceeding with any work necessitating cutting into or through any part of the building structure such as girders, beams, concrete or tile floors, partitions or ceilings (does not apply to the installation of lag screws, expansion bolts, and similar devices used for fastening equipment to floors, columns, walls, and ceilings);

(iii) Be responsible for and repair all damage to the building due to carelessness of the bidder's workforce, exercise reasonable care to avoid any damage to the owner's switching equipment or other property, and report to the owner any damage to the building which may exist or may occur during its occupancy of the building;

(iv) Consult with the owner before cutting into or through any part of the building structure in all cases where the fireproofing or moisture proofing may be impaired;

(v) Take necessary steps to ensure that all fire fighting apparatus is accessible at all times and all flammable materials are kept in suitable places outside the building;

(vi) Not use gasoline, benzene, alcohol, naphtha, carbon tetrachloride or turpentine for cleaning any part of the equipment;

(vii) Be responsible for delivering the CO and remote terminal equipment to the sites where they will be needed;

(viii) Install the equipment in accordance with the specifications for the line concentrator;

(ix) Have all leads brought out to terminal blocks on the MDF (or IDF if stated in appendix A of this section) and have all terminal blocks identified and permanently labeled;

(x) Use separate shielded type leads grounded at one end only unless otherwise specified by the owner or bidder or tip cables meeting RUS cable crosstalk requirements for carrier frequencies inside the central office;

(xi) Group the cables to separate carrier frequency, voice frequency, signaling, and power leads;

(xii) Make the necessary power and ground connections (location as shown in appendix A of this section) to the purchaser's power terminals and ground bus unless otherwise stated in appendix A of this section (ground wire shall be 6 AWG unless otherwise stated);

(xiii) Place the battery in service in compliance with the recommendations of the battery manufacturer;

(xiv) Make final charger adjustments using the manufacturer's recommended procedure;

(xv) Run all jumpers, except line and trunk jumpers (those connected to protectors) unless otherwise specified in appendix A of this section;

(xvi) Establish and update all data base memories with subscriber information as supplied by the owner until an agreed turnover time;

(xvii) Give the owner notice of completion of the installation at least one week prior to completion;

(xviii) Permit the owner or its representative to conduct tests and inspections after installation has been completed in order that the owner may be assured the requirements for installation are met;

(xix) Allow access, before turnover, by the owner or its representative, upon request, to the test equipment which is to be turned over as a part of the delivered equipment, to permit the checking of the circuit features which are being tested and to permit the checking of the amount of connected equipment to which the test circuits have access;

(xx) Notify the owner promptly of the completion of work of the central office terminals, remote terminals or such portions thereof as are ready for inspection; and

(xxi) Correct promptly all defects for which the bidder is responsible.

(4) *Information to be furnished by bidder.* The bidder shall accompany its bid with the following information:

(i) Two copies of the equipment list and the traffic calculations from which the quantities in the equipment list are determined;

(ii) Two copies of the traffic tables from which the quantities are determined, if other than the Erlang B traffic tables;

(iii) A block diagram of the line concentrator and associated maintenance equipment will be provided;

(iv) A prescribed method and criteria for acceptance of the completed line concentrator which will be subject to review;

(v) This special grounding requirements including the recommended configuration, suggested equipment and installation methods to be used to accomplish them;

(vi) The special handling and equipment requirements to avoid damage resulting from the discharge of static electricity (see paragraph (j)(4)(iii) of this section) or mechanical damage during transit installation and testing;

(vii) The location of technical assistance service, its availability and conditions for owner use and charges for the service by the bidder; and

(viii) The identification of the subscriber loop limits available beyond the line concentrator.

(5) *Installation requirements.* (i) All work shall be done in a neat, workmanlike manner. Equipment frames or cabinets shall be correctly located, carefully aligned, anchored, and firmly braced. Cables shall be carefully laid with sufficient radius of curvature and protected at corners and bends to ensure against damage from handling or vibration. Exterior cabinet installations for remote terminals shall be made in a permanent, eye-pleasing manner.

(ii) All multiple and associated wiring shall be continuous, free from crosses, reverses, and grounds and shall be correctly wired at all points.

(iii) An inspection shall be made by the owner or its representatives prior to performing operational and performance tests on the equipment, but after all installing operations which might disturb apparatus adjustments have been completed. The inspection shall be of such character and extent as to disclose with reasonable certainty any unsatisfactory condition of apparatus or equipment. During these inspections, or inspections for apparatus adjustments, or wire connections, or in testing of equipment, a sufficiently detailed examination shall be made throughout the portion of the equipment within which such condition is observed, or is likely to occur, to disclose the full extent of its existence, where any of the following conditions are observed:

(A) Apparatus or equipment units failing to compare in quantity and type to that specified for the installation;

(B) Apparatus or equipment units damaged or incomplete;

(C) Apparatus or equipment affected by rust, corrosion or marred finish; and

(D) Other adverse conditions resulting from failure to meet generally accepted standards of good workmanship.

(6) *Operational tests.* (i) Operational tests shall be performed on all circuits and circuit components to ensure their proper functioning in accordance with appropriate explanation of the operation of the circuit.

(ii) All equipment shall be tested to ensure proper operation with all components connected in all possible combinations and each line shall be tested for proper ring, ring trip and supervision.

(iii) All fuses shall be verified for continuity and correct rating. Alarm indication shall be demonstrated for each equipped fuse position. An already failed fuse compatible with the fuse position may be used.

(iv) Each alarm or signal circuit shall be checked for correct operation.

(v) A sufficient quantity of locally originating and incoming calls shall be made to demonstrate the function of the line concentrator including all equipped transmission paths. When intra-link calling is supplied, all intra-link transmission paths shall be demonstrated.

(7) *Acceptance tests and data required.* (i) Data shall be supplied to the owner by the bidder in writing as a part of the final documents in closing out the contract as follows:

(A) A detailed cross connect drawing of alarm to power board, central office battery to physical trunks or carrier system, wiring options used in terminals, channels, filters, repeaters, etc., marked in the owner's copy of the equipment manual or supplied separately;

(B) The measured central office supply voltages applied to the equipment terminals or repeaters at the time the jack and test point readings are made and ac supply voltages where equipment is powered from commercial ac sources;

(C) A list of all instruments, including accessories, by manufacturer and type number, used to obtain the data; and

(D) The measurements at all jack or test points recommended by the manufacturer, including carrier frequency level measurements at all carrier terminals and repeaters where utilized.

(ii) Data in the form of a checklist or other notations shall be supplied showing the results of the operational tests.

(iii) The bidder shall furnish to the owner a record of the battery cell or multicell unit voltages measured at the completion of the installation of the switching system before it is placed in commercial service. This is not required at a site where the owner furnishes dc power.

(8) *Joint inspection requirements.* (i) The bidder shall notify the owner in writing at least one week before the date the complete system will be ready for inspection and tests. A joint inspection shall be made by the bidder and the owner (or owner's engineer) to determine that the equipment installation is acceptable. The inspection shall include physical inspection, a review of acceptance test data, operational tests, and sample measurements.

(A) The owner shall review the acceptance test data and compare it to the requirements of this section.

(B) Sample measurements shall be made on all systems installed under this contract. Test methods should follow procedures described in paragraph (g)(5) of this section.

(C) A check shall be made of measured test point and jack readings for compliance with the manufacturer's specifications. This applies also to channels, terminals, carrier frequency repefault locating circuits.

(ii) In the event that the measured data or operational tests show that equipment fails to meet the requirements quirements of this section, the deficiencies are to be resolved as set forth in Article II of the 397 Special Equipment Contract. (Copies are available from RUS, room 0174, U.S. Department of Agriculture, Washington, DC 20250–1500.) The reports of the bidder and the owner shall be detailed as to deficiencies, causes, corrective action necessary, corrective action to be taken, completion time, etc.

(The information and recordkeeping requirements of this section have been approved by the Office of Management and Budget (OMB) under the control number 0572–0059.)

APPENDIX A TO § 1755.397—SPECIFICATION FOR LINE CONCENTRATOR DETAILED EQUIPMENT REQUIREMENTS

(INFORMATION TO BE SUPPLIED BY OWNER)

Telephone Company (Owner)

Name: _____

Location: _____

Number of LC's Required: _____

Line Concentrator Locations:

Location	No. of Lines	Central Office
.....	.....	.....
.....	.....	.....
.....	.....	.....
.....	.....	.....

1. General

1.1 Notwithstanding the bidder's equipment lists, the equipment and materials furnished by the bidder must meet the requirements of paragraphs (a) through (p) of this section, and this appendix A.

1.2 Paragraph (a) through (p) of this section cover the minimum general requirements for line concentrator equipment.

1.3 Paragraph (q) of this section covers the requirements for installation, inspection and testing when such service is included as part of the contract.

1.4 This appendix A covers the technical data for application engineering and detailed equipment requirements insofar as they can be established by the owner. This appendix A shall be filled in by the owner.

1.5 Appendix B of this section covers detailed information on the line concentrator equipment, information on system reliability and traffic capacity as proposed by the bidder. Appendix B of this section is to be filled in by the bidder and must be presented with the bid.

Office Name

(By Location) _____

LC Designation _____

2. Number of Subscriber Lines

	Equipped	Wired only
Single-Party	.....	.....
Pay Station (Type:_____	.....	.....
Other (Describe:_____)	.....	.....
Total	.....	.....

3. Loop Resistance

3.1 Number of non-pay station lines having a loop resistance, including the telephone set as follows:

3.1.1 For physical trunks between the remote and the office units, the loop resistance is to include the resistance of the trunk.

	No. of lines
1200–1900 ohms	.....
1901–3200 ohms	.....
3201–4500 ohms	.....

3.1.2 Number of pay station lines having a loop resistance, excluding the telephone set, greater than:

	No. of lines
1200 ohms (Prepay)	.....
1000 ohms (Semi-Postpay)	.....

When physical trunks are used, these resistances include that of the facility between the CO and the remote.

3.1.3 Range extension equipment, if required, is to be provided:

_____ By Bidder

_____ By Owner

(Quantity and Type) _____

4. Traffic Data

4.1 Average combined originating and terminating hundred call seconds (CCS) per line in the busy hour:

_____ CCS/Line. (Assume originating & terminating equal.)

4.2 Percent Intra-Calling _____

4.3 Total Busy Hour Calls _____

5. TYPE or RINGING

5.1 Frequency No.	1.	2.	3.	4.
Frequency (Hz)	.....	.....	.....	.....
Max. No. of Phones/Freq. ...	.....	.....	.....	.....

5.2 Minimum ringing generator capacity to be supplied shall be sufficient to serve _____ lines (each frequency).

6. Central Office Equipment Interface

6.1 COE will be:

6.1.1 COE Manufacturer

Type _____

Year _____

Generic _____

6.1.2 _____ See digital central office specification for the switchboard at _____ .

6.2 Interface will be:

6.2.1 _____ Line Circuit(s)

6.2.2 _____ Direct Digital Interface

6.2.3 _____ Other (Describe)

6.3 Mounting rack for line concentrator furnished by:

_____ Bidder

_____ Owner

(Specify width and height of rack available)
(Width) (Height)

6.4 Equipment to be installed in existing building:

_____ Yes (Attach detailed plan)

_____ No

7. Transmission Facilities

7.1 Transmission facilities between the central office and remote terminals shall be:

7.1.1 Type:

_____ VF Carrier Derived Circuits

_____ Digital Span Line (DS1)

_____ Other

_____

(Attach a layout of the transmission facilities between the central office and the remote terminals describing transmission and signaling parameters, routing and resistance where applicable.)

7.1.2 Utilizes physical plant

_____ Cable Pairs (Existing/New)

_____ Other

_____

NOTE: Unless otherwise stated, physical plant will be supplied by the owner.

7.1.3 Terminal equipment for transmission facility to be supplied by:

_____ Owner

_____ Bidder

7.1.3.1 Carrier e/w voice terminations _____ Yes _____ No

Manufacturer and type _____

Central office voice terminations Equipped _____, Wired Only _____

7.1.3.2 Digital span line (DS1) supplied by

_____ Owner

_____ Bidder

Manufacturer and Type _____

7.1.3.3 Number of repeaters (per span line) _____

7.1.3.4 Diverse (alternate) span line routing required

_____ Yes (Describe in Item 11) _____ No

7.1.3.5 Span line terminations only _____ Yes _____ No

7.1.3.6 Span line power required (CO and Remote Terminals) _____ Yes _____ No

7.1.3.7 Physical facility between CO and remote Loop Resistance _____ ohms, Length _____ meters

8. Power Equipment Requirements

8.1 Central Office Terminal

8.1.1 Owner-furnished −48 volt dc power _____ Yes _____ No

8.1.2 Other (Describe)

_____

8.1.3 Standby power is available _____ Yes _____ No

8.2 Remote Terminal

8.2.1 Owner-furnished −48 vdc power _____ Yes _____ No

8.2.2 Bidder-furnished power supply _____ Yes _____ No

8.2.3 AC power available at site:

_____ 110 vac, 60 Hz, single-phase

_____ Other (Describe in Item 11)

8.2.4 A battery reserve of _____ busy hours shall be provided for this line concentrator terminal when it reaches _____ lines at the traffic rates specified.

8.2.5 Batteries supplied shall be:

_____ Lead Calcium

_____ Stabilized Electrolyte

_____ Sealed Lead Acid

_____ Other (Describe in item 11)

8.2.6 Standby power is available _____ Yes _____ No

9. Remote Terminal

9.1 Mounting

9.1.1 _____ Outside Housing (To be furnished by bidder)

9.1.2 _____ Concrete Slab to be furnished by owner (Bidder to supply construction details after award.)

9.1.3 _____ Manhole, environmentally controlled (Describe in Item 11)

9.1.4 _____ Pedestal Mounting

9.1.5 _____ Pole Mounting (Owner-furnished installed pole)

9.1.6 _____ Prefab Building (Owner-furnished site)

9.2 Equipment is to be installed in an existing building.

_____ Yes _____ No

(Attach detailed plan.)

9.3 Other (Describe)

_____

_____

10. Alternates

11. Explanatory Notes

APPENDIX B TO § 1755.397—SPECIFICATION FOR LINE CONCENTRATORS DETAILED REQUIREMENTS; BIDDER SUPPLIED INFORMATION

Telephone Company (Owner)

Name: _____

Location: _____

Line Concentrator Equipment Locations

Central Office Terminal: _____

Remote Terminal: _____

1. General

1.1 The equipment and materials furnished by the bidder must meet the requirements of paragraphs (a) through (p) of this section.

1.2 Paragraph (a) through (p) of this section cover the minimum general requirements for line concentrator equipment.

1.3 Paragraph (q) of this section covers requirements for installation, inspection and testing when such service is included as part of the contract.

1.4 Appendix A of this section covers the technical data for application engineering and detailed equipment requirements insofar as they can be established by the owner. Appendix A of this section is to be filled in by the owner.

1.5 This appendix B covers detailed information on the line concentrator equipment, information as to system reliability and

traffic capacity as proposed by the bidder. This appendix B shall be filled in by the bidder and must be presented with the bid.

2. Performance Objectives

2.1 Reliability (See paragraph (c) of this section)

_____

_____

_____

_____

2.2 Busy Hour Load Capacity and Traffic Delay (See Paragraph (g) of this section)

_____

_____

_____

3. Equipment Quantities Dependent on System Design

3.1 Transmission Facilities between the Central Office and Remote Terminals

Type	Quantity equipped	Quantity wired only
.....	.....	.....
.....	.....	.....
.....	.....	.....

4. Power Requirements

4.1 Central Office Terminal

Voltage _____

Current Drain (Amps) Normal _____, Peak _____

Fuse Qty _____, Size _____, Type _____

Heat Dissipation (BTU/Hr.) _____

4.2 Remote Terminal

AC or DC _____

Voltage _____

Current Drain (Amps) Normal _____, Peak _____

Fuse Qty _____, Size _____, Type _____

Heat Dissipation (BTU/Hr.) _____

Power required for heating or cooling equipment in remote bidder-furnished housing

_____

_____

5. Temperature and Humidity Limitations

5.1 Temperature

	Central office	Remote*
Maximum °F (°C)	.....	.....
Minimum °F (°C)	.....	.....

5.2 Relative Humidity

	Central office	Remote*
Maximum	.....	.....
Minimum	.....	.....

*Show conditions outside bidder-furnished housing.

6. Explanatory Notes

[60 FR 44729, Aug. 29, 1995]

§§ 1755.398—1755.399 [Reserved]

§ 1755.400 RUS standard for acceptance tests and measurements of telecommunications plant.

Sections 1755.400 through 1755.407 cover the requirements for acceptance tests and measurements on installed copper and fiber optic telecommunications plant and equipment.

[62 FR 23960, May 2, 1997]

§ 1755.401 Scope.

(a) Acceptance tests outlined in §§ 1755.400 through 1755.407 are applicable to plant constructed by contract or force account. This testing standard provides for the following:

(1) Specific types of tests or measurements for the different types of telecommunications plant and equipment;

(2) The method of measurement and types of measuring equipment;

(3) The expected results and tolerances permitted to meet the acceptable standards and objectives;

(4) Suggested formats for recording the results of the measurements and tests; and

(5) Some probable causes of nonconformance and methods for corrective action, where possible.

(b) Alternative methods of measurements that provide suitable alternative results shall be permitted with the concurrence of the Rural Utilities Service (RUS).

(c) For the purpose of this testing standard, a ''measurement'' shall be defined as an evaluation where quantitative data is obtained (e.g., resistance in ohms, structural return loss in decibels (dB), etc.) and a ''test'' shall be defined as an evaluation where no quantitative data is obtained (e.g., a check mark indicating conformance is usually the result of the test).

(d) The sequence of tests and measurements described in this standard have been prepared as a guide. Variations from the sequence may be necessary on an individual application basis.

(e) There is some overlap in the methods of testing shown; also, the extent of each phase of testing may vary on an individual basis. The borrower shall determine the overall plan of testing, the need and extent of testing, and the responsibility for each phase of testing.

[62 FR 23960, May 2, 1997]

§1755.402 Ground resistance measurements.

(a) The resistance of the central office (CO) and the remote switching terminal (RST) ground shall be measured before and after it has been bonded to the master ground bar (MGB) where it is connected to the building electric service ground.

(b) The ground resistance of electronic equipment such as span line repeaters, carrier terminal equipment, concentrators, etc. shall be measured.

(c) *Method of measurement.* The connection of test equipment for the ground resistance measurement shall be as shown in Figure 1. Refer to RUS Bulletin 1751F–802, ''Electrical Protection Grounding Fundamentals,'' for a comprehensive discussion of ground resistance measurements.

(d) *Test equipment.* The test equipment for making this measurement is shown in Figure 1 as follows:

FIGURE 1

GROUND RESISTANCE MEASUREMENT ①, ②

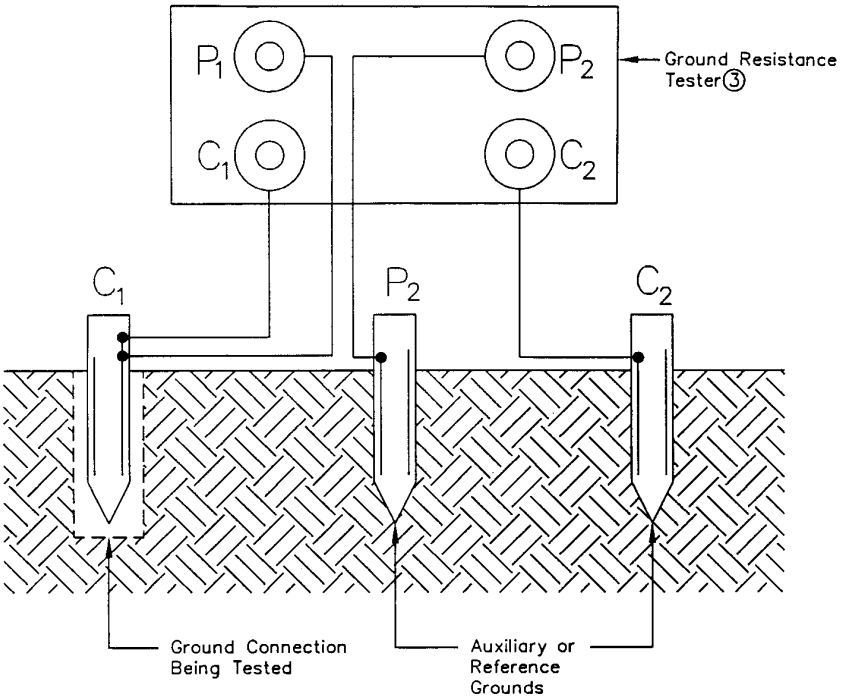

Notes:

1. Measurement procedure for COs, RSTs, and electronic equipment housings approximately 10 ft by 10 ft (3 m by 3m) or smaller shall be as follows: The minimum distance between the CO ground (C_1) being tested and C_2 = 100 ft (30.5 m). Take several measurements moving P_2 from 50 ft to 75 ft (15.2 m to 23 m) away from CO ground C_2. Resistance should initially rise then level off and then start rising again. The value to record for CO ground resistance is the value where it levels off which usually should occur with P_2 at 62 % of the distance between the CO ground and C_2.

2. Measurement procedure for COs, RSTs, and electronic equipment housings larger than 10 ft by 10 ft (3 m by 3 m) shall be in accordance with the test equipment manufacturer's instructions.

3. Dynatel Research–Vibroground, General Radio–Megger Bridge, Associate Research–Megohm Meter or equivalent.

(e) *Applicable results.* (1) For the CO and RST, the resistance after the bond has been made to the MGB electric service ground shall not exceed 5 ohms. Where the measured ground resistance exceeds 5 ohms, the borrower shall determine what additional grounding, if any, shall be provided.

(2) For electronic equipment, the ground resistance shall not exceed 25 ohms. Where the measured ground resistance exceeds 25 ohms, the borrower shall determine what additional grounding, if any, shall be provided.

(3) When ground resistance measurements exceed the ground resistance requirements of paragraphs (e)(1) and (e)(2) of this section, refer to RUS Bulletin 1751F–802, ''Electrical Protection Grounding Fundamentals,'' for suggested methods of reducing the ground resistance.

(f) *Data record.* Results of the CO and RST ground resistance measurements shall be recorded. A suggested format similar to Format I, Outside Plant Acceptance Tests—Subscriber Loops, in §1755.407 or a format specified in the applicable construction contract may be used. Results of the electronic equipment ground resistance measurements shall be recorded. A suggested format similar to Format II, Outside Plant Acceptance Tests—Trunk Circuits, in §1755.407 or a format specified in the applicable construction contract may be used. Data showing approximate moisture content of the soil at the time of measurement, the temperature, the type of soil and a description of the test equipment used shall also be included.

(g) *Probable causes for nonconformance.* Refer to RUS Bulletin 1751F–802, ''Electrical Protection Grounding Fundamentals,'' and Telecommunications Engineering and Construction Manual (TE&CM) Section 810, ''Electrical Protection of Electronic Analog and Digital Central Office Equipment,'' for possible causes of nonconformance and suggested methods for corrective action.

[62 FR 23960, May 2, 1997]

§1755.403 Copper cable telecommunications plant measurements.

(a) *Shield or shield/armor continuity.* (1) Tests and measurements shall be made to ensure that cable shields or shield/armors are electrically continuous. There are two areas of concern. The first is shield or shield/armor bonding within a pedestal or splice and the second is shield or shield/armor continuity between pedestals or splices.

(2) Measurement techniques outlined here for verification of shield or shield/armor continuity are applicable to buried cable plant. Measurements of shield continuity between splices in aerial cable plant should be made prior to completion of splicing. Conclusive results cannot be obtained on aerial plant after all bonds have been completed to the supporting strand, multigrounded neutral, etc.

(3) *Method of measurement.* (i) The shield or shield/armor resistance measurements shall be made between pedestals or splices using either a Wheatstone bridge or a volt-ohm meter. For loaded plant, measurements shall be made on cable lengths that do not exceed one load section. For nonloaded plant, measurements shall be made on cable lengths that do not exceed 5,000 feet (ft) (1,524 meters (m)). All bonding wires shall be removed from the bonding lugs at the far end of the cable section to be measured. The step-by-step measurement procedure shall be as shown in Figure 2.

(ii) Cable shield or shield/armor continuity within pedestals or splices shall be measured with a cable shield splice continuity test set. The step-by-step measurement procedure outlined in the manufacturer's operating instructions for the specific test equipment being used shall be followed.

(4) *Test equipment.* (i) The test equipment for measuring cable shield or shield/armor resistance between pedestals or splices is shown in Figure 2 as follows:

FIGURE 2

SHIELD OR SHIELD/ARMOR RESISTANCE MEASUREMENT

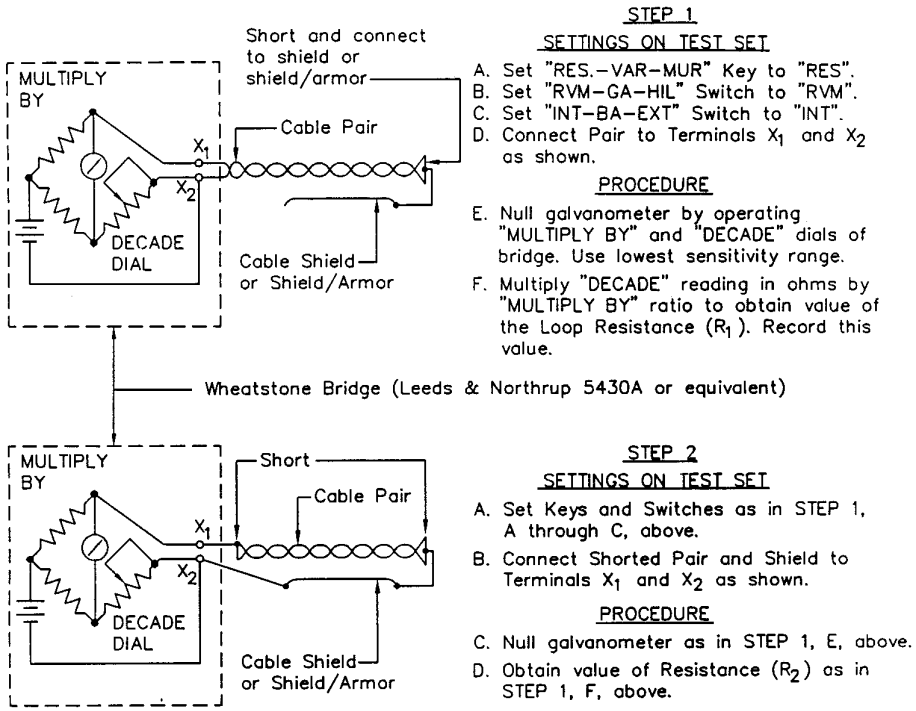

STEP 3

COMPUTE THE SHIELD OR SHIELD/ARMOR RESISTANCE (R_S)

$$R_S = R_2 - \frac{R_1}{4}$$

(ii) A cable shield splice continuity tester shall be used to measure shield or shield/armor continuity within pedestals or splices.

(5) *Applicable results.* (i) The shield or shield/armor resistance per 1000 ft and per kilometer (km) for cable diameters and types of shielding materials are given in Table 1 (English Units) and Table 2 (Metric Units), respectively as follows:

TABLE 1.—SHIELD RESISTANCE @ 68 °F (20°C) CABLE DIAMETERS VERSUS SHIELD TYPES

[English Units]

Outside diameter inches (in.)	Nominal resistance ohm/1000 ft.					
	A	B	C	D	E	F
0.40–0.49	0.77	1.54	1.65	1.96	2.30	5.51
0.50–0.59	0.64	1.28	1.37	1.63	1.91	4.58
0.60–0.69	0.51	1.03	1.10	1.31	1.53	3.67
0.70–0.79	0.44	0.88	0.94	.....	1.31	3.14

TABLE 1.—SHIELD RESISTANCE @ 68 °F (20°C) CABLE DIAMETERS VERSUS SHIELD TYPES—Continued

[English Units]

Outside diameter inches (in.)	Nominal resistance ohm/1000 ft.					
	A	B	C	D	E	F
0.80–0.89	0.38	0.77	0.82	.....	1.14	2.74
0.90–0.99	0.35	0.69	0.74	.....	1.03	2.47
1.00–1.09	0.31	0.62	0.66	.....	0.92	2.20
1.10–1.19	0.28	0.56	0.60	.....	0.84	2.00
1.20–1.29	0.26	0.51	0.55	.....	0.77	1.84
1.30–1.39	0.24	0.48	0.51	.....	0.71	1.70
1.40–1.49	0.22	0.44	0.47	.....	0.65	1.57
1.50–1.59	0.21	0.41	0.44	.....	0.61	1.47
1.60–1.69	0.19	0.38	0.41	.....	0.57	1.37
1.70–1.79	0.18	0.37	0.39	.....	0.54	1.30
1.80–1.89	0.17	0.35	0.37	.....	0.51	1.24
1.90–1.99	0.16	0.33	0.35	.....	0.49	1.17
2.00–2.09	0.15	0.31	0.33	.....	0.46	1.10
2.10–2.19	0.15	0.29	0.31	.....	0.43	1.03
2.20–2.29	0.14	0.28	0.30	.....	0.42	1.00
2.30–2.39	0.14	0.27	0.29	.....	0.40	0.97
2.40–2.49	0.13	0.25	0.27	.....	0.38	0.90
2.50–2.59	0.12	0.24	0.26	.....	0.36	0.87
2.60–2.69	0.12	0.23	0.25	.....	0.35	0.83
2.70–2.79	0.11	0.22	0.24	.....	0.33	0.80
2.80–2.89	0.11	0.22	0.24	.....	0.33	0.80
2.90–2.99	0.11	0.22	0.23	.....	0.32	0.77
3.00–3.09	0.10	0.21	0.22	.....	0.31	0.73
3.10–3.19	0.10	0.20	0.21	.....	0.29	0.70
3.20–3.29	0.10	0.20	0.21	.....	0.29	0.70
3.30–3.39	0.09	0.19	0.20	.....	0.28	0.67
3.40–3.49	0.09	0.18	0.19	.....	0.26	0.63
3.50–3.59	0.09	0.18	0.19	.....	0.26	0.63
3.60–3.69	0.08	0.17	0.18	.....	0.25	0.60
3.70–3.79	0.08	0.17	0.18	.....	0.25	0.60
3.80–3.89	0.08	0.16	0.17	.....	0.24	0.57
3.90–3.99	0.08	0.16	0.17	.....	0.24	0.57
4.00–4.99	0.07	0.15	0.16	.....	0.22	0.53

Where: Column A–10 mil Copper shield.
Column B—5 mil Copper shield.
Column C—8 mil Coated Aluminum and 8 mil Coated Aluminum/6 mil Coated Steel shields.
Column D—7 mil Alloy 194 shield.
Column E—6 mil Alloy 194 and 6 mil Copper Clad Stainless Steel shields.
Column F—5 mil Copper Clad Stainless Steel and 5 mil Copper Clad Alloy Steel shields.

TABLE 2.—SHIELD RESISTANCE @ 68°F (20°C) CABLE DIAMETERS VERSUS SHIELD TYPES

[Metric Units]

Outside diameter millimeters (mm)	Nominal Resistance ohm/km					
	A	B	C	D	E	F
10.2—12.5	2.53	5.05	5.41	6.43	7.55	18.08
12.7—15.0	2.10	4.20	4.49	5.35	6.27	15.03
15.2—17.5	1.67	3.38	3.61	4.30	5.02	12.04
17.8—20.1	1.44	2.89	3.08	.....	4.30	10.30
20.3—22.6	1.25	2.53	2.69	.....	3.74	8.99
22.9—25.1	1.15	2.26	2.43	.....	3.38	8.10
25.4—27.7	1.02	2.03	2.16	.....	3.02	7.22
27.9—30.2	0.92	1.84	1.97	.....	2.76	6.56
30.5—32.8	0.85	1.67	1.80	.....	2.53	6.04
33.0—35.3	0.79	1.57	1.67	.....	2.33	5.58
35.6—37.8	0.72	1.44	1.54	.....	2.13	5.15
38.1—40.4	0.69	1.34	1.44	.....	2.00	4.82
40.6—42.9	0.62	1.25	1.34	.....	1.87	4.49
43.2—45.5	0.59	1.21	1.28	.....	1.77	4.26
45.7—48.0	0.56	1.15	1.21	.....	1.67	4.07
48.3—50.5	0.52	1.08	1.15	.....	1.61	3.84
50.8—53.1	0.49	1.02	1.08	.....	1.51	3.61
53.3—55.6	0.49	0.95	1.02	.....	1.41	3.38
55.9—58.2	0.46	0.92	0.98	.....	1.38	3.28
58.4—60.7	0.46	0.89	0.95	.....	1.31	3.18
61.0—63.2	0.43	0.82	0.89	.....	1.25	2.95

TABLE 2.—SHIELD RESISTANCE @ 68°F (20°C) CABLE DIAMETERS VERSUS SHIELD TYPES—Continued

[Metric Units]

Outside diameter millimeters (mm)	Nominal Resistance ohm/km					
	A	B	C	D	E	F
63.5—65.8	0.39	0.79	0.85	.....	1.18	2.85
66.0—68.3	0.39	0.75	0.82	.....	1.15	2.72
68.6—70.9	0.36	0.72	0.79	.....	1.08	2.62
71.1—73.4	0.36	0.72	0.79	.....	1.08	2.62
73.7—75.9	0.36	0.72	0.75	.....	1.05	2.53
76.2—78.5	0.33	0.69	0.72	.....	1.02	2.39
78.7—81.0	0.33	0.66	0.69	.....	0.95	2.30
81.3—83.6	0.33	0.66	0.69	.....	0.95	2.30
83.6—86.1	0.29	0.62	0.66	.....	0.92	2.20
86.4—88.6	0.29	0.59	0.62	.....	0.85	2.07
88.9—91.2	0.29	0.59	0.62	.....	0.85	2.07
91.4—93.7	0.26	0.56	0.59	.....	0.82	1.97
94.0—96.3	0.26	0.56	0.59	.....	0.82	1.97
96.5—98.8	0.26	0.52	0.56	.....	0.79	1.87
99.1—101.3	0.26	0.52	0.56	.....	0.79	1.87
101.6—103.9	0.23	0.49	0.52	.....	0.72	1.74

Where: Column A—10 mil Copper shield.
Column B—5 mil Copper shield.
Column C—8 mil Coated Aluminum and 8 mil Coated Aluminum/6 mil Coated Steel shields.
Column D—7 mil Alloy 194 shield.
Column E—6 mil Alloy 194 and 6 mil Copper Clad Stainless Steel shields.
Column F—5 mil Copper Clad Stainless Steel and 5 mil Copper Clad Alloy Steel shields.

(ii) All values of shield and shield/armor resistance provided in Tables 1 and 2 in (a)(5)(i) of this section are considered approximations. If the measured value corrected to 68°F (20°C) is within #30 percent (%) of the value shown in Table 1 or 2, the shield and shield/armor shall be assumed to be continuous.

(iii) To correct the measured shield resistance to the reference temperature of 68°F (20°C) use the following formulae:

$R_{68}=Rt/[1+A(t-68)]$ for English Units

$R_{20}=Rt/[1+A(t-20)]$ for Metric Units

Where:

R_{68}=Shield resistance corrected to 68°F in ohms.

R_{20}=Shield resistance corrected to 20°C in ohms.

R_t=Shield resistance at measurement temperature in ohms.

A=Temperature coefficient of the shield tape.

t=Measurement temperature in °F or (°C).

(iv) The temperature coefficients (A) for the shield tapes to be used in the formulae referenced in paragraph (a)(5)(iii) of this section are as follows:

(A) 5 and 10 mil copper = 0.0021 for English units and 0.0039 for Metric units;

(B) 8 mil coated aluminum and 8 mil coated aluminum/6 mil coated steel = 0.0022 for English units and 0.0040 for Metric units;

(C) 5 mil copper clad stainless steel and 5 mil copper clad alloy steel = 0.0024 for English units and 0.0044 for Metric units;

(D) 6 mil copper clad stainless steel = 0.0019 for English units and 0.0035 for Metric units; and

(E) 6 and 7 mil alloy 194 = 0.0013 for English units and 0.0024 for Metric units.

(v) When utilizing shield continuity testers to measure shield and shield/armor continuity within pedestals or splices, refer to the manufacturer's published information covering the specific test equipment to be used and for anticipated results.

(6) *Data record*. Measurement data from shield continuity tests shall be recorded together with anticipated Table 1 or 2 values (see paragraph (a)(5)(i) of this section) in an appropriate format to permit comparison. The recorded data shall include specific location, cable size, cable type, type of shield or shield/armor, if known, etc.

(7) *Probable causes for nonconformance.* Among probable causes for nonconformance are broken or damaged shields or shield/armors, bad bonding harnesses, poorly connected bonding clamps, loose bonding lugs, etc.

(b) *Conductor continuity.* After placement of all cable and wire plant has been completed and joined together in continuous lengths, tests shall be made to ascertain that all pairs are free from grounds, shorts, crosses, and opens, except for those pairs indicated as being defective by the cable manufacturer. The tests for grounds, shorts, crosses, and opens are not separate tests, but are inherent in other acceptance tests discussed in this section. The test for grounds, shorts, and crosses is inherent when conductor insulation resistance measurements are conducted per paragraph (c) of this section, while tests for opens are inherent when tests are conducted for loop resistance, insertion loss, noise, or return loss measurements, per paragraphs (d), (e), or (f) of this section. The borrower shall make certain that all defective pairs are corrected, except those noted as defective by the cable manufacturer in accordance with the marking provisions of the applicable cable and wire specifications. All defective pairs that are not corrected shall be reported in writing with details of the corrective measures attempted.

(c) *Dc insulation resistance (IR) measurement.* (1) IR measurements shall be made on completed lengths of insulated cable and wire plant.

(2) *Method of measurement.* (i) The IR measurement shall be made between each conductor and all other conductors, sheath, shield and/or shield/armor, and/or support wire electrically connected together and to the main distributing frame (MDF) ground. The measurement shall be made from the central office with the entire length of the cable under test and, where used with all protectors and load coils connected. For COs containing solid state arresters, the solid state arresters shall be removed before making the IR measurements. Field mounted voice frequency repeaters, where used, may be left connected for the IR test but all carrier frequency equipment, including carrier repeaters and terminals, shall be disconnected. Pairs used to feed power remote from the CO shall have the power disconnected and the tip and ring conductors shall be opened before making IR tests. All conductors shall be opened at the far end of the cable being measured.

(ii) IR tests are normally made from the MDF with all CO equipment disconnected at the MDF, but this test may be made on new cables at field locations before they are spliced to existing cables. The method of measurement shall be as shown in Figure 3 as follows:

FIGURE 3

DC INSULATION RESISTANCE MEASUREMENT

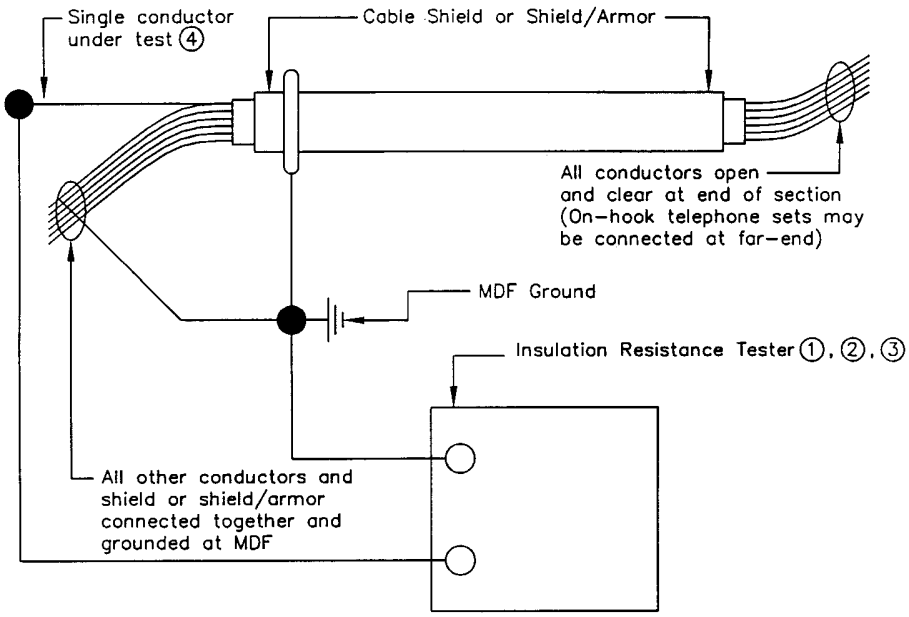

Notes:

① For hand cranked or battery operated Insulation Resistance Testers, the output voltage should not exceed 500 volts dc.

② For dc bridge type Megohmmeters, the voltage applied to the conductors under test should not exceed 250 volts dc when using instruments having adjustable test voltage levels.

③ Biddle CO.–Model BM 200, Associate Research–Model 263, General Radio–1864 Megohm Meter, or equivalent.

④ Repeat test for each conductor in cable.

(iii) If the IR of the conductor cannot be measured because of breakdown of lightning arresters by the test voltage, the arrester units shall be removed and the conductor IR retested. If the IR then meets the minimum requirements, the conductor will be considered satisfactory. Immediately following the IR tests, all arrester units which have been removed shall be reinstalled.

(3) *Test equipment.* (i) IR measurements shall be made with either an insulation resistance test set or a direct current (dc) bridge type megohmmeter.

(ii) The IR test set shall have an output voltage not to exceed 500 volts dc and shall be of the hand cranked or battery operated type.

(iii) The dc bridge type megohmmeter, which may be alternating current (ac) powered, shall have scales and multiplier which make it possible to accurately read IR from 1 megohm to 1 gigohm. The voltage applied to the conductors under test shall not exceed ''250 volts dc'' when using an instrument having adjustable test voltage levels. This will help to prevent breakdown of lightning arresters.

(4) *Applicable results.* (i) For all new insulated cable or wire facilities, the expected IR levels are normally greater than 1,000 to 2,000 megohm-mile (1,609 to 3,218 megohm-km). A value of 500 megohm-mile (805 megohm-km) at 68°F (20°C) shall be the minimum acceptable value of IR. IR varies inversely with the length and the temperature.

(ii) The megohm-mile (megohm-km) value for a conductor may be computed by multiplying the actual scale reading in megohms on the test set by the length in miles (km) of the conductor under test.

(iii) The objective insulation resistance may be determined by dividing 500 by the length in miles (805 by the length in km) of the cable or wire conductor being tested. The resulting value shall be the minimum acceptable meter scale reading in megohms.

(iv) Due to the differences between various insulating materials and filling compounds used in manufacturing cable or wire, it is impractical to provide simple factors to predict the magnitude of variation in insulation resistance due to temperature. The variation can, however, be substantial for wide excursions in temperature from the ambient temperature of 68 °F (20 °C).

(v) Borrowers should be certain that tip and ring IR measurements of each pair are approximately the same. Borrowers should also be certain that IR measurements are similar for cable or wire sections of similar length and cable or wire type. If some pairs measure significantly lower, borrowers should attempt to improve these pairs in accordance with cable manufacturer's recommendations.

NOTE: Only the megohm-mile (megohm-km) requirement shall be cause for rejection, not individual measurement differences.

(5) *Data record.* The measurement data shall be recorded. Suggested formats similar to Format I, Outside Plant Acceptance Tests—Subscriber Loops, or Format II, Outside Plant Acceptance Tests—Trunk Circuits, in § 1755.407 or formats specified in the applicable construction contract may be used.

(6) *Probable causes for nonconformance.* (i) When an IR measurement is below 500 megohm-mile (805 megohm-km), the cable or wire temperature at the time of testing must then be taken into consideration. If this temperature is well above 68 °F (20 °C), the measurement shall be disregarded and the cable or wire shall be remeasured at a time when the temperature is approximately 68 °F (20 °C). If the result is then 500 megohm-mile (805 megohm-km) or greater, the cable or wire shall be considered satisfactory.

(ii) Should the cable or wire fail to meet the 500 megohm-mile (805 megohm-km) requirement when the temperature is known to be approximately 68 °F (20 °C) there is not yet justification for rejection of the cable or wire. Protectors, lightning arresters, etc., may be a source of low insulation resistance. These devices shall be removed from the cable or wire and the cable or wire IR measurement shall be repeated. If the result is acceptable, the cable or wire shall be considered acceptable. The removed devices which caused the low insulation resistance value shall be identified and replaced, if found defective.

(iii) When the cable or wire alone is still found to be below the 500 megohm-mile (805 megohm-km) requirement after completing the steps in paragraph (c)(6)(i) and/or paragraph (c)(6)(ii) of this section, the test shall be repeated to measure the cable or wire in sections to isolate the piece(s) of cable or wire responsible. The cable or wire section(s) that is found to be below the 500 megohm-mile (805 megohm-km) requirement shall be either repaired in accordance with the cable or wire manufacturer's recommended procedure or shall be replaced as directed by the borrower.

(d) *Dc loop resistance and dc resistance unbalance measurement.* (1) When specified by the borrower, dc loop resistance and dc resistance unbalance measurements shall be made on all cable pairs used as trunk circuits. The dc loop resistance and dc resistance unbalance measurements shall be made between CO locations. Measurements shall include all components of the cable path.

(2) Dc loop resistance and dc resistance unbalance measurements shall be made on all cable pairs used as subscriber loop circuits when:

(i) Specified by the borrower;

(ii) A large number of long loops terminate at one location (similar to trunk circuits); or

(iii) Circuit balance is less than 60 dB when computed from noise measurements as described in paragraph (e) of this section.

(3) Dc resistance unbalance is controlled to the maximum possible degree by the cable specification. Allowable random unbalance is specified between tip and ring conductors within each reel. Further random patterns should occur when the cable conductor size changes. Cable meeting the unbalance requirements of the cable specification may under some conditions result in unacceptable noise levels as discussed in paragraph (d)(6)(iii) of this section.

(4) *Method of measurement.* The method of measurement shall be as detailed in Figures 4 and 5.

(5) *Test equipment.* The test equipment is shown in Figures 4 and 5 as follows:

FIGURE 4

DC LOOP RESISTANCE MEASUREMENT

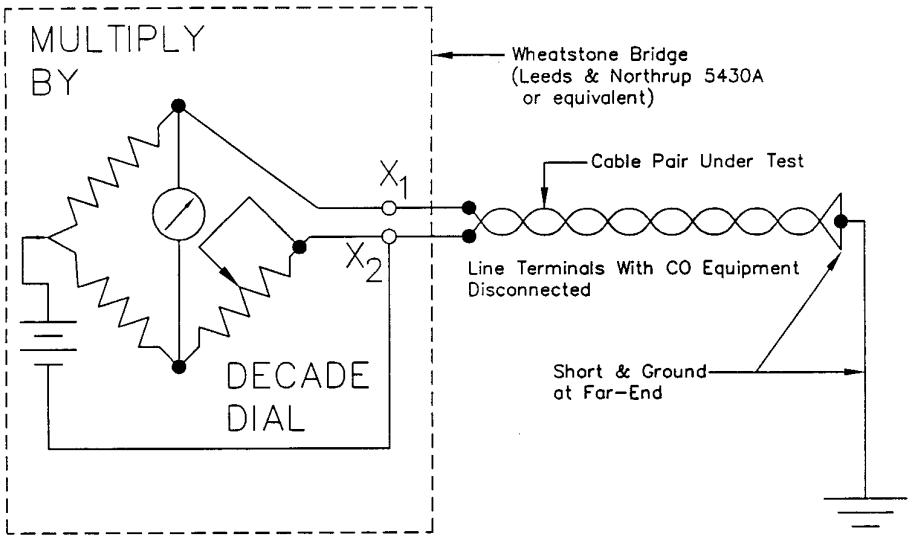

SETTINGS ON TEST SET

1. Set "RES.–VAR–MUR" Key to "RES".
2. Set "RVM–GA–HIL" Switch to "RVM".
3. Set "INT–BA–EXT" Switch to "INT".
4. Connect Pair to Terminals X_1 and X_2 as shown.

PROCEDURE

1. Null galvanometer by operating "MULTIPLY BY" and "DECADE" dials of bridge. Use lowest sensitivity range.
2. Multiply "DECADE" reading in ohms by "MULTIPLY BY" ratio to obtain value of the Loop Resistance.

FIGURE 5

DC LOOP RESISTANCE UNBALANCE MEASUREMENT

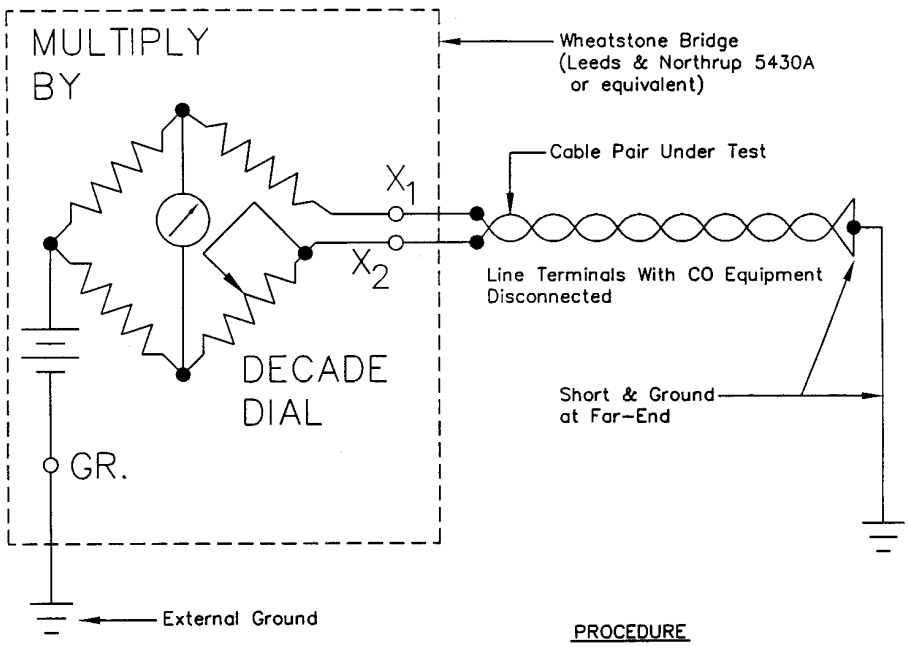

SETTINGS ON TEST SET

1. Connect Terminals X_1 & X_2 as shown.
2. Set "RES.–VAR–MUR" Key to "VAR".
3. "MULTIPLY BY" Switch to 1/1.
4. Set "RVM–GA–HIL" Switch to "RVM".
5. Set "INT–BA–EXT" Switch to "INT".

PROCEDURE

1. Null galvanometer by operating "MULTIPLY BY" and "DECADE" dials of bridge. Use lowest sensitivity range.
2. If continuously varying 1, 10, or 100 ohm switches from 1 to 999 ohms produces a deflection consistently to the left on the galvanometer, reverse the conductors of the cable pair under test to the X_1 & X_2 terminals of the bridge.
3. Vary 1, 10, or 100 ohm switches again until deflection approaches zero. Read "DECADE" dial for Resistance Unbalance in ohms.

(6) *Applicable results.* (i) The measured dc loop resistance shall be within ± 5% of the calculated dc loop resistance when corrected for temperature.

(ii) The calculated dc loop resistance is computed as follows:

(A) Multiply the length of each different gauge by the applicable resistance per unit length as shown in Table 3 as follows:

TABLE 3.—DC LOOP RESISTANCE @ 68°F (20°C)

American wire gauge (AWG)	Loop resistance	
	ohms/1000 ft	ohms/km
19	16.1	52.8
22	32.4	106.3
24	51.9	170.3
26	83.3	273.3

(B) Add the individual resistances for each gauge to give the total calculated dc loop resistance at a temperature of 68°F (20°C).

(C) Correct the total calculated dc loop resistance at the temperature of 68°F (20°C) to the measurement temperature by the following formulae:

$R_t = R_{68} \times [1+0.0022 \times t—68)]$ for English Units

$R_t = R_{20} \times [1+0.0040 \times (t—20)]$ for Metric Units

Where:

R_t = Loop resistance at the measurement temperature in ohms.

R_{68} = Loop resistance at a temperature of 68°F in ohms.

R_{20} = Loop resistance at a temperature of 20°C in ohms.

t = Measurement temperature in °F or (°C).

(D) Compare the calculated dc loop resistance at the measurement temperature to the measured dc loop resistance to determine compliance with the requirement specified in paragraph (d)(6)(i) of this section.

(iii) Resistance varies directly with temperature change. For copper conductor cables, the dc resistance changes by ± 1% for every ± 5°F (2.8°C) change in temperature from 68°F (20°C).

(iv) The dc resistance unbalance between the individual conductors of a pair shall not exceed that value which will result in a circuit balance of less than 60 dB when computed from noise measurements as described in paragraph (e) of this section. It is impractical to establish a precise limit for overall circuit dc resistance unbalance due to the factors controlling its contribution to circuit noise. These factors include location of the resistance unbalance in relation to a low impedance path to ground (close to the central office) and the magnitude of unbalance in short lengths of cable making up the total circuit length. The objective is to obtain the minimum unbalance throughout the entire circuit when it is ascertained through noise measurements that dc resistance unbalance may be contributing to poor cable balance.

(v) Pairs with poor noise balance may be improved by reversing tip and ring conductors of pairs at cable splices. Where dc resistance unbalances are systematic over the total trunk circuit or loop circuit length, tip and ring reversals may be made at frequent intervals. Where the unbalances are concentrated in a shorter section of cable, only one tip and ring reversal should be required. Concentrated dc resistance unbalance produces maximum circuit noise when located adjacent to the central office. Concentrated dc resistance unbalance will contribute to overall circuit noise at a point approximately two-thirds (⅔) of the distance to the subscriber. All deliberate tip and ring reversals shall be tagged and identified to prevent plant personnel from removing the reversals when resplicing these connections in the future. The number of tip and ring reversals shall be held to a minimum.

(vi) A systematic dc resistance unbalance can sometimes be accompanied by other cable parameters that are marginal. Among these are pair-to-pair capacitance unbalance, capacitance unbalance-to-ground, and 150 kilohertz (kHz) crosstalk loss. Engineering judgment has to be applied in each case. Rejection of cable for excessive dc resistance unbalance shall only apply to a single reel length, or shorter.

(7) *Data record*. The measurement data for dc loop resistance and dc resistance unbalance shall be recorded. Suggested formats similar to Format I for subscriber loops and Format II for trunk circuits in § 1755.407 or formats

specified in the applicable construction contract may be used.

(8) *Probable causes for nonconformance.* Dc loop resistance and dc resistance unbalance are usually the result of the resistance of individual conductors used in the manufacture of the cable. Resistance unbalance can be worsened by defective splicing of the conductors (splicing connectors, improper crimping tool, etc.).

(e) *Subscriber loop measurement (loop checking).* (1) When specified by the borrower, insertion loss and noise measurements shall be performed on subscriber loops after connection of a line circuit to the loop by the one person method using loop checking equipment from the customer access location. For this method, the central office should be equipped with a 900 ohm plus two microfarad quiet termination and a milliwatt generator having the required test frequencies; or a portable milliwatt generator having the desired frequencies may be used, especially, where several small offices are involved.

(2) At a minimum, insertion loss and frequency response of subscriber loop plant shall be measured at 1,000, 1,700, 2,300, and 2,800 Hertz (Hz). When additional testing frequencies are desired, the additional frequencies shall be specified in the applicable construction contract.

(3) Measurements of insertion loss and noise shall be made on five percent or more of the pairs. A minimum of five pairs shall be tested on each route. Pairs shall be selected on a random basis with greater consideration in the selection given to the longer loops. Consideration shall be given to measuring a large percentage, up to 100 percent, of all loops.

(4) *Method of measurement*—(i) *Insertion loss.* The step-by-step measurement procedure shall be as shown in Figure 6. The output level of the milliwatt generator tones shall be determined prior to leaving the CO. This shall be accomplished by dialing the milliwatt generator number from a spare line at the MDF and measuring with the same equipment to be used in the tests at customer access locations. The output levels shall be recorded for reference later. Insertion loss measurements shall be made across the tip and ring terminals of the pair under test. Figure 6 is as follows:

FIGURE 6

INSERTION LOSS AND FREQUENCY RESPONSE MEASUREMENT AT SUBSCRIBER LOCATION USING LOOP CHECKING EQUIPMENT

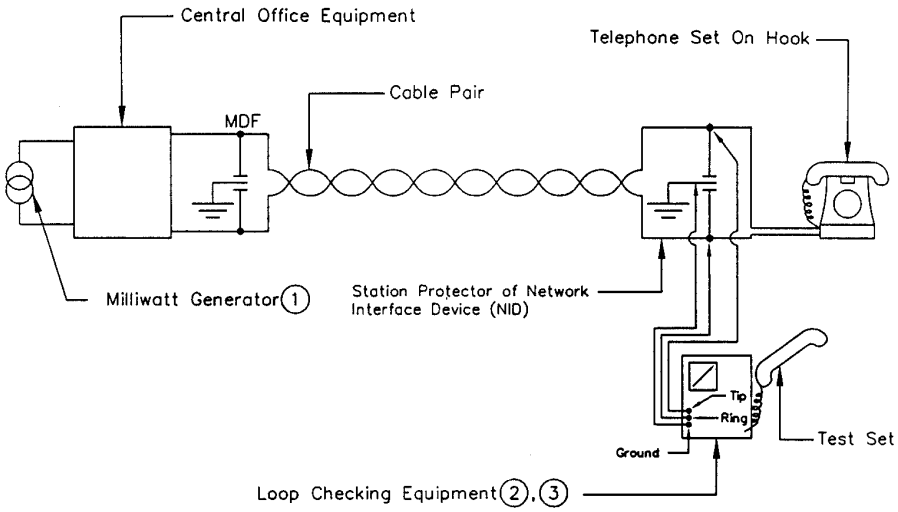

Calibration

1. Before leaving CO connect Loop Checking equipment to idle line at MDF.
   A. Dial number of Milliwatt Generator.
   B. Read and record output level of all tones in dBm for reference.

Notes:

(1) H.P.–204B, H.P.–204C, General Radio–1335, or equivalent.

(2) N.E.C.–125, N.E.C.–37B, Wilcom–136, Wilcom–336, Wilcom–337, or equivalent.

(3) Do not leave test equipment connected and exposed to ringing voltage of incoming call. Ringing voltage could damage test equipment.

Measurement Procedure

1. Connect Loop Checking equipment at subscriber's NID as shown.
2. Dial number of Milliwatt Generator at central office.
3. Verify by listening on the test set that the tones are being received.
4. Switch test set to Circuit Loss mode.
5. Read loss in dBm at each frequency.
6. Record results of loss at each frequency.
7. Subtract the output levels observed at the CO for each tone by the values observed at the subscriber location. The resultant values are the Insertion Loss.
8. Disconnect leads of test equipment from NID when tests are completed.

(ii) *Noise.* The step-by-step measurement procedure shall be as shown in Figure 7. Prior to leaving the CO for testing, dial the 900 ohm plus two microfarad quiet termination from a spare pair and measure the termination to determine that it actually is quiet. Circuit noise (noise-metallic) shall be measured at the customer access location across the tip and ring terminals of the pair under test. Power influence (direct reading with loop checking equipment) shall be measured at the customer access location from tip and ring conductors-to-ground (this connection is completed via the test

unit). The power influence measurement includes the entire talking connection from the quiet termination to the customer. (That is, the power influence measurement includes all the CO equipment which normally makes up the connection.) Figure 7 is as follows:

FIGURE 7

NOISE MEASUREMENT AT SUBSCRIBER LOCATION USING LOOP CHECKING EQUIPMENT

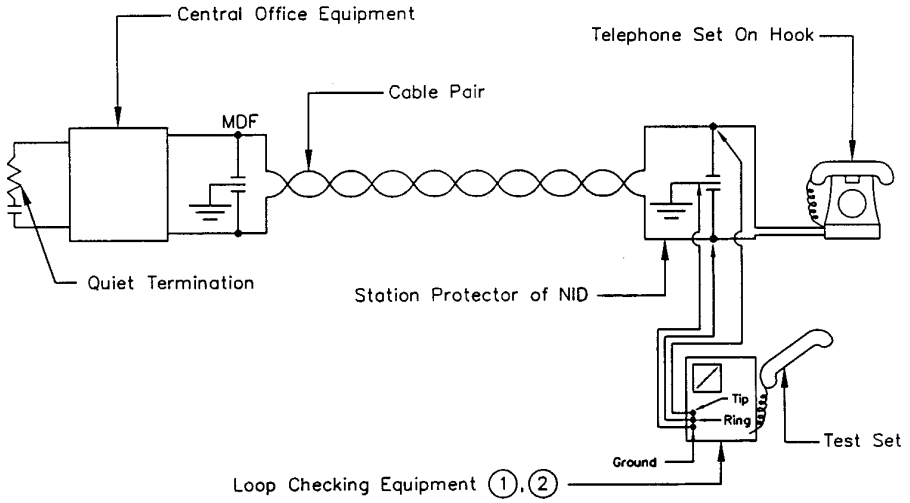

Calibration

1. Before leaving CO connect Loop Checking equipment to idle line at MDF (no outside plant attached).

A. Dial number of Quiet Termination.

B. Read and record Circuit Noise in dBrnc.

Note:

(1.) N.E.C.–125, N.E.C.–37B, Wilcom–136, Wilcom–336, Wilcom–337, or equivalent.

(2.) Do not leave test equipment connected and exposed to ringing voltage of incoming call. Ringing voltage could damage test equipment.

Measurement Procedure

1. Connect Loop Checking equipment at subscriber's NID as shown.
2. Dial number of Quiet Termination in cental office.
3. Switch test set to Circuit Noise (NM) mode.
4. Read and record Circuit Noise value in dBrnc.
5. Switch test set to Power Influence (PI) mode.
6. Read and record Power Influence value in dBrnc.
7. Compute and record apparent Balance (Balance = PI – NM).
8. Disconnect leads of test equipment from NID when tests are completed.

(5) *Test equipment.* (i) Loop checking equipment which is available from several manufacturers may be used for these measurements. The equipment should have the capability of measuring loop current, insertion loss, circuit

noise (NM) and power influence (PI). The test equipment manufacturer's operating instructions shall be followed.

(ii) There should be no measurable transmission loss when testing through loop extenders.

(6) *Applicable results*—(i) *Insertion loss.* (A) For D66 loaded cables (a specific loading scheme using a 66 millihenry inductor spaced nominally at 4,500 ft [1,371 m] intervals) measured at a point one-half section length beyond the last load point, the measured nonrepeated insertion loss shall be within ± 10% at 1000, 1700, 2300, and 2800 Hz, ± 15% at 3400 Hz and ± 20% at 4000 Hz of the calculated insertion loss at the same frequencies and temperature.

(B) For H88 loaded cables (a specific loading scheme using an 88 millihenry inductor spaced nominally at 6,000 ft [1,829 m] intervals) measured at a point one-half section length beyond the last load point, the measured nonrepeatered insertion loss shall be within ± 10% at 1000, 1700, and 2300 Hz, ± 15% at 2800 Hz, and ± 20% at 3400 Hz of the calculated insertion loss at the same frequencies and temperature.

(C) For nonloaded cables, the measured insertion loss shall be within ± 10% at 1000, 1700, 2300, and 2800 Hz, ± 15% at 3400 Hz and ± 20% at 4000 Hz of the calculated insertion loss at the same frequencies and temperature.

(D) For loaded cables, the calculated loss at each desired frequency shall be computed as follows:

(*1*) Multiply the length in miles (km) of each different gauge in the loaded portion of the loop (between the office and a point one-half load section beyond the furthest load point) by the applicable decibel (dB)/mile (dB/km) value shown in Table 4 or 5. This loss represents the total loss for each gauge in the loaded portion of the loop;

(*2*) Multiply the length in miles (km) of each different gauge in the end section or nonloaded portion of the cable (beyond a point one-half load section beyond the furthest load point) by the applicable dB/mile (dB/km) value shown in Table 6. This loss represents the total loss for each gauge in the nonloaded portion of the loop; and

(*3*) The total calculated insertion loss is computed by adding the individual losses determined in paragraphs (e)(6)(i)(D)(*1*) and (e)(6)(i)(D)(*2*) of this section.

(E) For nonloaded cables, the calculated loss at each desired frequency shall be computed by multiplying the length in miles (km) of each different gauge by the applicable dB/mile (dB/km) value shown in Table 6 and then adding the individual losses for each gauge to determine the total calculated insertion loss for the nonloaded loop.

(F) The attenuation information in Tables 4, 5, and 6 are based on a cable temperature of 68 °F (20 °C). Insertion loss varies directly with temperature. To convert measured losses for loaded cables to a different temperature, use the following value for copper conductors: For each ±5 °F (±2.8 °C) change in the temperature from 68 °F (20 °C), change the insertion loss at any frequency by ±1%. To convert measured losses for nonloaded cables to a different temperature, use the following value for copper conductors: For each ±10 °F (±5.6 °C) change in the temperature from 68 °F (20 °C), change the insertion loss at any frequency by ±1%. Tables 4, 5, and 6 are as follows:

TABLE 4—FREQUENCY ATTENUATION @ 68 °F (20 °C) D66 LOADED EXCHANGE CABLES 83 NANOFARAD (NF)/MILE (52 NF/KM) (SEE NOTE)

Frequency (Hz)	Attenuation dB/mile (dB/km) AWG			
	19	22	24	26
200	0.41 (0.26)	0.67 (0.42)	0.90 (0.56)	1.21 (0.75)
400	0.43 (0.26)	0.77 (0.48)	1.09 (0.68)	1.53 (0.95)
600	0.44 (0.27)	0.80 (0.49)	1.17 (0.73)	1.70 (1.06)
800	0.44 (0.27)	0.81 (0.50)	1.21 (0.75)	1.80 (1.12)
1000	0.44 (0.27)	0.82 (0.51)	1.23 (0.76)	1.86 (1.15)
1200	0.45 (0.28)	0.83 (0.52)	1.24 (0.77)	1.91 (1.19)
1400	0.45 (0.28)	0.83 (0.52)	1.26 (0.78)	1.94 (1.20)
1600	0.45 (0.28)	0.84 (0.52)	1.26 (0.78)	1.96 (1.22)
1800	0.45 (0.28)	0.84 (0.52)	1.27 (0.78)	1.98 (1.23)
2000	0.46 (0.29)	0.85 (0.53)	1.28 (0.79)	1.99 (1.24)
2200	0.46 (0.29)	0.85 (0.53)	1.29 (0.80)	2.01 (1.25)

TABLE 4—FREQUENCY ATTENUATION @ 68 °F (20 °C) D66 LOADED EXCHANGE CABLES 83 NANOFARAD (NF)/MILE (52 NF/KM) (SEE NOTE)—Continued

Frequency (Hz)	Attenuation dB/mile (dB/km) AWG			
	19	22	24	26
2400	0.47 (0.29)	0.86 (0.53)	1.30 (0.81)	2.02 (1.26)
2600	0.47 (0.29)	0.87 (0.54)	1.31 (0.81)	2.04 (1.27)
2800	0.48 (0.30)	0.88 (0.55)	1.32 (0.82)	2.07 (1.29)
3000	0.49 (0.30)	0.89 (0.55)	1.34 (0.83)	2.10 (1.30)
3200	0.50 (0.31)	0.91 (0.57)	1.36 (0.84)	2.13 (1.32)
3400	0.52 (0.32)	0.93 (0.58)	1.40 (0.87)	2.19 (1.36)
3600	0.54 (0.34)	0.97 (0.60)	1.45 (0.90)	2.26 (1.40)
3800	0.57 (0.35)	1.02 (0.63)	1.52 (0.94)	2.36 (1.47)
4000	0.62 (0.38)	1.10 (0.68)	1.63 (1.01)	2.53 (1.57)

NOTE: Between end-section lengths of 2,250 ft (686 m) for D66 loading.

TABLE 5—FREQUENCY ATTENUATION @ 68 °F (20 °C) H88 LOADED EXCHANGE CABLES 83 NF/ MILE (52 NF/KM) (SEE NOTE)

Frequency (Hz)	Attenuation dB/mile (dB/km) AWG			
	19	22	24	26
200	0.40 (0.25)	0.66 (0.41)	0.90 (0.56)	1.20 (0.75)
400	0.42 (0.26)	0.76 (0.47)	1.08 (0.67)	1.53 (0.95)
600	0.43 (0.27)	0.79 (0.49)	1.16 (0.72)	1.70 (1.06)
800	0.43 (0.27)	0.80 (0.50)	1.20 (0.75)	1.80 (1.12)
1000	0.43 (0.27)	0.81 (0.50)	1.23 (0.76)	1.86 (1.15)
1200	0.44 (0.27)	0.82 (0.51)	1.24 (0.77)	1.91 (1.19)
1400	0.44 (0.28)	0.82 (0.51)	1.25 (0.78)	1.94 (1.20)
1600	0.44 (0.27)	0.83 (0.52)	1.26 (0.78)	1.97 (1.22)
1800	0.45 (0.28)	0.84 (0.52)	1.28 (0.79)	1.99 (1.24)
2000	0.46 (0.29)	0.85 (0.53)	1.29 (0.80)	2.02 (1.26)
2200	0.47 (0.29)	0.86 (0.53)	1.31 (0.81)	2.06 (1.28)
2400	0.48 (0.30)	0.89 (0.55)	1.34 (0.83)	2.10 (1.30)
2600	0.50 (0.31)	0.92 (0.57)	1.39 (0.86)	2.18 (1.35)
2800	0.53 (0.33)	0.97 (0.60)	1.47 (0.91)	2.29 (1.42)
3000	0.59 (0.37)	1.07 (0.66)	1.60 (0.99)	2.48 (1.54)
3200	0.71 (0.44)	1.26 (0.78)	1.87 (1.16)	2.86 (1.78)
3400	1.14 (0.71)	1.91 (1.19)	2.64 (1.64)	3.71 (2.30)
3600	4.07 (2.53)	4.31 (2.68)	4.65 (2.90)	5.30 (3.29)
3800	6.49 (4.03)	6.57 (4.08)	6.72 (4.18)	7.06 (4.39)
4000	8.22 (5.11)	8.27 (5.14)	8.36 (5.19)	8.58 (5.33)

NOTE: Between end-section lengths of 3,000 ft (914 m) for H88 loading.

TABLE 6—FREQUENCY ATTENUATION @ 68 °F (20 °C) NONLOADED EXCHANGE CABLES 83 NF/ MILE (52 NF/KM) AWG

Frequency (Hz)	Attenuation dB/mile (dB/km) AWG			
	19	22	24	26
200	0.58 (0.36)	0.82 (0.51)	1.03 (0.64)	1.30 (0.81)
400	0.81 (0.51)	1.15 (0.71)	1.45 (0.90)	1.84 (1.14)
600	0.98 (0.61)	1.41 (0.87)	1.77 (1.10)	2.26 (1.40)
800	1.13 (0.70)	1.62 (1.01)	2.04 (1.27)	2.60 (1.61)
1000	1.25 (0.78)	1.80 (1.12)	2.28 (1.42)	2.90 (1.80)
1200	1.36 (0.84)	1.97 (1.22)	2.50 (1.55)	3.17 (1.97)
1400	1.46 (0.91)	2.12 (1.32)	2.69 (1.67)	3.42 (2.12)
1600	1.55 (0.96)	2.26 (1.40)	2.87 (1.78)	3.65 (2.27)
1800	1.63 (1.01)	2.39 (1.48)	3.04 (1.89)	3.87 (2.40)
2000	1.71 (1.06)	2.51 (1.56)	3.20 (1.99)	4.08 (2.53)
2200	1.78 (1.11)	2.62 (1.63)	3.35 (2.08)	4.27 (2.65)
2400	1.85 (1.15)	2.73 (1.70)	3.49 (2.17)	4.45 (2.76)
2600	1.91 (1.19)	2.83 (1.76)	3.62 (2.25)	4.63 (2.88)
2800	1.97 (1.22)	2.93 (1.82)	3.75 (2.33)	4.80 (2.98)
3000	2.03 (1.26)	3.02 (1.88)	3.88 (2.41)	4.96 (3.08)
3200	2.08 (1.29)	3.11 (1.93)	4.00 (2.48)	5.12 (3.18)
3400	2.13 (1.32)	3.19 (1.98)	4.11 (2.55)	5.27 (3.27)
3600	2.18 (1.35)	3.28 (2.04)	4.22 (2.62)	5.41 (3.36)
3800	2.22 (1.38)	3.36 (2.09)	4.33 (2.69)	5.55 (3.45)
4000	2.27 (1.41)	3.43 (2.13)	4.43 (2.75)	5.69 (3.53)

(G) For loaded subscriber loops, the 1 kHz loss shall be approximately 0.45 dB per 100 ohms of measured dc loop resistance. This loss shall be the measured loss less the net gain of any voice frequency repeaters in the circuit. Testing shall also be conducted to verify that the loss increases gradually as the frequency increases. The loss on H88 loaded loops should be down only slightly at 2.8 kHz but drop rapidly above 2.8 kHz. The loss on D66 loaded loops shall be fairly constant to about 3.4 kHz and there shall be good response at 4.0 kHz. When voice frequency repeaters are in the circuit there will be some frequency weighting in the build-out network and the loss at the higher frequencies will be greater than for nonrepeatered loops.

(H) For nonloaded subscriber loops, the 1 kHz loss shall be approximately 0.9 dB per 100 ohms of measured dc loop resistance. Testing shall also be conducted to verify that the loss is approximately a straight line function with no abrupt changes. The 3 kHz loss should be approximately 70% higher than the 1 kHz loss.

(ii) *Noise.* The principal objective related to circuit noise (noise-metallic) and the acceptance of new plant is that circuit noise levels be 20 dBrnc or less (decibels above reference noise, C-message weighted (a weighting derived from listening tests, to indicate the relative annoyance or speech impairment by an interfering signal of frequency (f) as heard through a ''500-type'' telephone set)). For most new, properly installed, plant construction, circuit noise will usually be considerably less than 20 dBrnc unless there are unusually long sections of telephone plant in parallel with electric power facilities and/or power influence of paralleling electric facilities is abnormally high. When circuit noise is 20 dBrnc or less, the loop plant shall be considered acceptable. When measured circuit noise is greater than 20 dBrnc, loop plant shall still be considered acceptable providing circuit balance (power influence reading minus circuit noise readings) is 60 dB or greater and power influence readings are 85 dBrnc or greater. When circuit noise is greater than 20 dBrnc and circuit balance is less than 60 dB and/or power influence is less than 85 dBrnc, loop plant shall not be considered acceptable and the loop plant shall be remedied to make circuit balance equal to or greater than 60 dB.

(7) *Data record.* Measurement data shall be recorded. A suggested format similar to Format I for subscriber loops in § 1755.407 or a format specified in the applicable construction contract may be used.

(8) *Probable causes for nonconformance*—(i) *Insertion loss.* Some of the more common causes for failing to obtain the desired results may be due to reversed load coil windings, missing load coils, bridge taps between load coils, load coil spacing irregularities, excessive end sections, cables having high or low mutual capacitance, load coils having the wrong inductance, load coils inadvertently installed in nonloaded loops, moisture or water in cable, split pairs, and improperly spliced connections. The above factors can occur singularly or in combination. Experience to date indicates that the most common problems are missing load coils, reversed load coil windings or bridge taps.

(ii) *Noise.* Some of the common causes for failing to obtain the desired results may be due to high power influence from paralleling electrical power systems, poor telephone circuit balance, discontinuous cable shields, inadequate bonding and grounding of cable shields, high capacitance unbalance-to-ground of the cable pairs, high dc loop resistance unbalance, dc loop current less than 20 milliamperes, etc. The above factors can occur singularly or in combination. See TE&CM Section 451, Telephone Noise Measurement and Mitigation, for steps to be taken in reducing telecommunications line noise.

(f) *One-person open circuit measurement (subscriber loops).* (1) When specified by the borrower, open circuit measurements shall be made on all loaded and nonloaded subscriber loops upon completion of the cable work to verify that the plant is free from major impedance irregularities.

(2) For loaded loops, open circuit measurements shall be made using one of the following methods:

(i) Impedance or pulse return pattern, with cable pair trace compared to

that of an artificial line of the same length and gauge. For best results, a level tracer or fault locator with dual trace capability is required;

(ii) Return loss using a level tracer, with cable pair compared to an artificial line of the same length and gauge connected in lieu of a Precision Balance Network (PBN). This method can be made with level tracers having only single trace capability; or

(iii) Open circuit structural return loss using a level tracer. This method can be made with level tracer having only single trace capability.

(3) Of the three methods suggested for loaded loops, the method specified in paragraph (f)(2)(ii) of this section is the preferred method because it can yield both qualitative and quantitative results. The methods specified in paragraphs (f)(2)(i) and (f)(2)(iii) of this section can be used as trouble shooting tools should irregularities be found during testing.

(4) For nonloaded loops, open circuit measurements shall be made using the method specified in paragraph (f)(2)(i) of this section.

(5) *Method of measurement.* Open circuit measurements shall be made at the CO on each loaded and nonloaded pair across the tip and ring terminals of the pair under test. All CO equipment shall be disconnected at the MDF for this test. For loaded loops containing voice frequency repeaters installed in the CO or field mounted, the open circuit measurement shall be made after the repeaters have been disconnected. Where field mounted repeaters are used, the open circuit measurement shall be made at the repeater location in both directions.

(i) *Impedance or pulse return pattern.* The step-by-step measurement procedure using the impedance or pulse return pattern for loaded and nonloaded loops shall be as shown in Figure 8. An artificial line of the same makeup as the cable to be tested shall be set up. The traces of the impedance or pulse return pattern from the cable pair and the artificial line shall be compared and should be essentially identical. If the impedance or pulse return traces from the cable pair are different than the artificial line trace, cable faults are possible. When the cable pair trace indicates possible defects, the defects should be identified and located. One method of identifying and locating defects involves introducing faults into the artificial line until its trace is identical with the cable trace.

(ii) *Return loss balanced to artificial line.* The step-by-step measurement procedure using the return loss balanced to artificial line for loaded loops shall be as shown in Figure 9. An artificial line of the same makeup as the cable to be tested shall be set up. The artificial line is connected to the external network terminals of the test set. The cable pair under test is compared to this standard. When defects are found, they should be identified and located by introducing faults into the artificial line. This is more difficult than with the method referenced in paragraph (f)(5)(i) of this section since this measurement is more sensitive to minor faults and only a single trace is used.

(iii) *Open circuit structural return loss using level tracer.* The step-by-step measurement procedure using the level tracer for loaded loops shall be as shown in Figure 10. The cable pair is compared to a PBN.

(6) *Test equipment.* Equipment for performing these tests is shown in Figures 8 through 10. For loaded loops, artificial loaded lines must be of the same gauge and loading scheme as the line under test. For nonloaded loops, artificial nonloaded lines must be of the same gauge as the line under test. Artificial lines should be arranged using switches or other quick connect arrangements to speed testing and troubleshooting. Figures 8 through 10 are as follows:

FIGURE 8

ONE–PERSON OPEN CIRCUIT MEASUREMENT
IMPEDANCE OR PULSE RETURN PATTERN

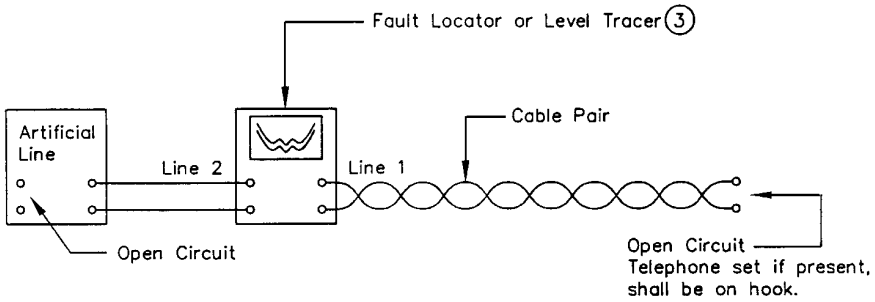

Measurement Procedure

1. Set up Artificial Line to same make–up [Length & Gauge(s)] as the cable pair.
2. Connect to test set (See Note (1)).
3. Connect cable pair to test set (See Note (1)).
4. Compare traces of Artificial Line and cable pair (2). They should be essentially identical. Differences indicate cable faults.
5. Location and type of fault may be determined by introducing faults in the Artificial Line until its trace is identical to that of the cable pair.

Notes:

(1.) Terminals to which cable pair and artificial line are attached shall be determined from the manufacturer's operating instructions. Proper settings for various switches and adjustments on the test set shall also be determined from the same source.

(2.) With test sets having trace storage capability only one set of terminals need be used. Connect Artificial Line to test set, store trace and disconnect line. Connect cable pair and compare trace to stored trace. To identify fault, store cable pair trace and connect Artificial Line. Introduce faults in the Artificial Line until traces are identical.

(3.) N.E.C.–17A, Biddle–CME110A–1, Dolcom–490, Tektronix–1503, Wilcom–T195, Wilcom–T132, or equivalent.

FIGURE 9

ONE–PERSON OPEN CIRCUIT MEASUREMENT
RETURN LOSS BALANCED TO ARTIFICIAL LINE

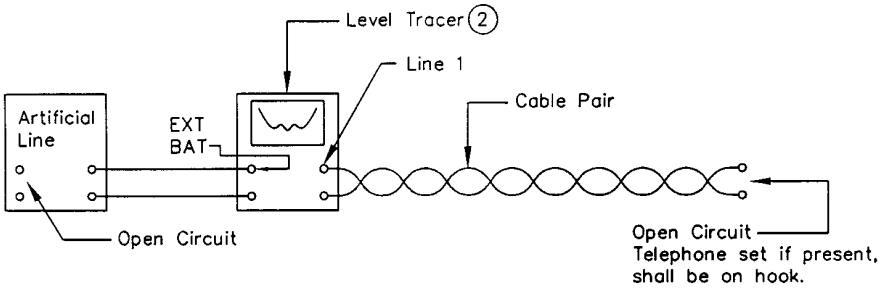

Measurement Procedure

1. Connect the test equipment and cable pair under test as shown above (See Note 1). Set up Artificial Line to same make–up [Length & Gauge(s)] as the cable pair.

2. Observe Return Loss from 200 to 3500 Hz (D66) or 200 to 3000 Hz (H88) noting maximum and minimum values. Note the value and frequency of the poorest (Lowest Numerical Value) SRL. (SRL becomes better as the readings become more negative). Record this value and frequency.

Notes:

(1.) Terminals to which cable pair and Artificial Line are attached shall be determined from the manufacturer's operating instructions. Proper settings for various switches and adjustments on the test set shall also be determined from the same source.

(2.) Wilcom–T132, Wilcom–T195, or equivalent.

FIGURE 10

ONE–PERSON OPEN CIRCUIT MEASUREMENT
STRUCTURAL RETURN LOSS USING LEVEL TRACER

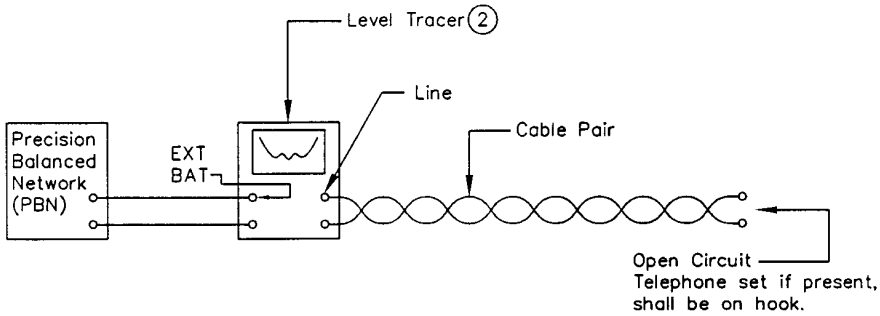

Measurement Procedure

1. Connect the test equipment and cable pair under test as shown above (See Note (1)). Set gauge of PBN for: Single Gauge – Same gauge as cable being measured; Mixed Gauge – Most predominant gauge adjacent to test set.

2. Observe Return Loss between 1000 and 3500 Hz (D66) or 1000 and 3000 Hz (H88) observing maximum and minimum values. Note the value and frequency of the poorest (Lowest Numerical Value) SRL. Single Gauge: Record this value. Mixed Gauge: Change gauge of PBN and note if SRL becomes better. (SRL becomes better as readings become more negative). If it does, record this value and frequency; if not, record value obtained with original gauge setting. (Varying gauge will be necessary, depending on actual cable layout, to obtain best SRL).

Notes:

(1) Terminals to which cable pair and Artificial Line are attached shall be determined from the manufacturer's operating instructions. Proper settings for various switches and adjustments on the test set shall also be determined from the same source.

(2) Wilcom–T132, Wilcom–T195, or equivalent.

(7) *Applicable results.* (i) For loaded and nonloaded loops, the two traces in the pulse return pattern or impedance method (paragraph (f)(5)(i) of this section) shall be essentially identical. The degree of comparison required of the two traces is to be determined by experience.

(ii) For loaded loops, results for return loss measurements using a level tracer, with artificial line, in lieu of a PBN (paragraph (f)(5)(ii) of this section) shall meet the following requirements:

(A) For D66 and H88 loaded cables the structural return loss (SRL) values shall range between 28 and 39 dB, respectively, at the critical frequency of structural return loss (CFSRL) within the pass band of the loading system being used. The minimum SRL value for uniform gauge shall be 25 dB CFSRL. These SRL values apply for loaded cables of uniform gauge for the

entire length of the subscriber loop circuit. Subscriber loop circuits shall meet the loading spacing deviations and the cable mutual capacitance requirements in the applicable RUS cable specifications;

(B) For mixed gauge loaded cables the SRL values shall be 25 and 27 dB CFSRL, respectively, and the minimum SRL value shall be 22 dB CFSRL; and

(C) The two traces in the pulse return pattern should be essentially identical. The degree of comparison required of the two traces is determined by experience.

(iii) For loaded loops, the results of open circuit structural return loss measurements using a level tracer (paragraph (f)(5)(iii) of this section) shall meet the following requirements. For D66 and H88 loaded cables with uniform or mixed gauges, the worst value allowed for measured open circuit structural return loss between 1,000–3,500 Hz and 1,000–3,000 Hz, respectively, shall be approximately 0.9 dB (round trip) for each 100 ohms outside plant dc loop resistance including the resistance of the load coils. The value of 0.9 dB per 100 ohms for the round trip loss remains reasonably accurate as long as:

(A) The subscriber end section of the loaded pair under test is approximately 2,250 ft (685 m) for D66 loading or 3,000 ft (914 m) for H88 loading in length; and

(B) The one-way 1,000 Hz loss does not exceed 10 dB.

(iv) For loaded loops, the measured value of open circuit structural return loss can only be as accurate as the degree to which the dc loop resistance of the loaded pair under test is known. Most accurate results shall be obtained when the dc loop resistance is known by actual measurements as described in paragraph (d) of this section. Furthermore, where the dc loop resistance is measured at the same time as the open circuit structural return loss, no correction for temperature is needed because the loss is directly proportional to the loop resistance. Where it is not practical to measure the dc loop resistance, it shall be calculated and corrected for temperature as specified in paragraph (d)(6)(ii) of this section. When measuring existing plant, care shall be taken to verify the accuracy of the records, if they are used for the calculation of the dc loop resistance. For buried plant, the temperature correction shall be based at the normal depth of the cable in the ground. (Temperature can be measured by boring a hole to cable depth with a ground rod, placing a thermometer in the ground at the cable depth, and taking and averaging several readings during the course of the resistance measurements.) For aerial cable it shall be based on the temperature inside the cable sheath.

(v) For loaded loops, the best correlation between the measured and the expected results shall be obtained when the cable is of one gauge, one size, and the far end section is approximately 2,250 ft (685 m) for D66 loading or 3,000 ft (914 m) for H88 loading. Mixing gauges and cable sizes will result in undesirable small reflections whose frequency characteristics and magnitude cannot be accurately predicted. In subscriber loop applications, cable gauge may be somewhat uniform but the cable pair size most likely will not be uniform as cable pair sizes taper off toward the customer access location and a downward adjustment of 1 dB of the allowed value shall be acceptable. ''Long'' end sections (as defined in TE&CM Section 424, ''Guideline for Telecommunications Subscriber Loop Plant'') lower the expected value, a further downward adjustment of 3 dB in the allowed value shall be acceptable.

(vi) For loaded loops, the limiting factor when making open circuit structural return loss measurements is when the 1,000 Hz one-way loss of the loaded cable pair under test becomes 10 dB or greater; it becomes difficult to detect the presence of irregularities beyond the 10 dB point on the loop. To overcome this difficulty, loaded loops having a one-way loss at 1,000 Hz greater than 10 dB shall be opened at some convenient point (such as a pedestal or ready access enclosure) and loss measurements at the individual portions measuring less than 10 dB one-way shall be made separately. When field mounted voice frequency repeaters are used, the measurement shall be made at the repeater location in both directions.

(8) *Data record.* (i) When performing a pulse return pattern or impedance open

circuit measurement on loaded and nonloaded loops, a ''check mark'' indicating that the pair tests good or an ''X'' indicating that the pair does not test good shall be recorded in the SRL column. A suggested format similar to Format I for subscriber loops in § 1755.407 or a format specified in the applicable construction contract may be used.

(ii) When performing open circuit return loss measurements using the return loss balanced to an artificial line or return loss using a level tracer on loaded loops, the value of the poorest (lowest numerical value) SRL and its frequency in the proper column between 1,000 and 3,500 Hz for D66 loading or between 1,000 and 3,000 Hz for H88 loading shall be recorded. A suggested format similar to Format I for subscriber loops in § 1755.407 or a format specified in the applicable construction contract may be used.

(9) *Probable causes for nonconformance.* Some of the more common causes for failing to obtain the desired results may be due to reversed load coil windings, missing load coils, bridge taps between load coils, load coil spacing irregularities, excessive end sections, cables having high or low mutual capacitance, load coils inadvertently installed in nonloaded loops, moisture or water in the cable, load coils having the wrong inductance, split pairs, and improperly spliced connectors. The above can occur singularly or in combination. Experience to date indicates that the most common problems are missing load coils, reversed load coil windings or bridge taps.

(g) *Cable insertion loss measurement (carrier frequencies).* (1) When specified by the borrower, carrier frequency insertion loss measurements shall be made on cable pairs used for T1, T1C, and/or station carrier systems. Carrier frequency insertion loss shall be made on a minimum of three pairs. Select at least one pair near the outside of the core unit layup. If the three measured pairs are within 10% of the calculated loss in dB corrected for temperature, no further testing is necessary. If any of the measured pairs of a section are not within 10% of the calculated loss in dB, all pairs in that section used for carrier transmission shall be measured.

(2) *Method of measurement.* The step-by-step method of measurement shall be as shown in Figure 11.

(3) *Test equipment.* The test equipment is shown in Figure 11 as follows:

FIGURE 11

CARRIER FREQUENCY INSERTION LOSS MEASUREMENT
CABLE FACILITIES

Measurement

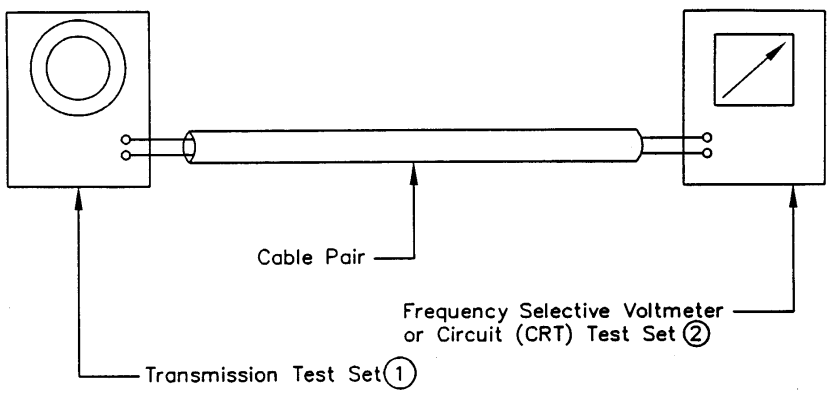

Measurement Procedure

(1.) Connect the transmission test set to one end of the length of cable to be measured and either the frequency selective voltmeter (FSVM) or CRT test set to the other end as shown.

(2.) Record the Insertion Loss in dB of the cable at each specified frequency.

(3.) The measured Insertion Loss of the cable should be within ± 10 percent of the calculated loss in dB when the loss is corrected for temperature.

(4.) Transmission test sets having an impedance between 100 and 135 ohms on the cable side are acceptable.

Notes:

(1.) H.P.–204B, H.P.–204C, H.P.–355, Siemens–W2057, or equivalent.

(2.) Wilcom–T136, Wilcom–T336, Wilcom–T337, Wilcom–T132B, Siemens–D2057, or equivalent.

(4) *Applicable results.* (i) The highest frequency to be measured is determined by the type of carrier system. For T1 type carrier, the highest frequency is normally 772 kHz. For T1C type carrier, the highest frequency is normally 1576 kHz. The highest frequency to be measured for station carrier is 140 kHz.

(ii) The measured insertion loss of the cable shall be within ±10% of the calculated loss in dB when the loss is corrected for temperature.

(iii) The calculated insertion loss is computed as follows:

(A) Multiply the length of each different gauge by the applicable dB per unit length as shown in Table 7 or 8 as follows:

TABLE 7.—CABLE ATTENUATION @ 68 °F (20 °C) FILLED CABLES—SOLID INSULATION

Frequency (kHz)	Attenuation dB/mile (dB/km) Gauge (AWG)			
	19	22	24	26
10	2.8 (1.7)	4.8 (2.9)	6.4 (3.9)	8.5 (5.3)
20	3.2 (2.0)	5.8 (3.6)	8.2 (5.1)	11.2 (6.9)
40	3.6 (2.2)	6.5 (4.0)	9.6 (6.0)	13.9 (8.6)
60	4.0 (2.5)	6.9 (4.2)	10.3 (6.4)	15.2 (9.4)
80	4.5 (2.8)	7.3 (4.5)	10.7 (6.6)	16.0 (9.9)
100	4.9 (3.0)	7.7 (4.7)	11.1 (6.8)	16.5 (10.2)
112	5.2 (3.2)	8.0 (4.9)	11.3 (7.0)	16.8 (10.5)
120	5.4 (3.3)	8.1 (5.0)	11.5 (7.1)	17.0 (10.6)
140	5.8 (3.6)	8.6 (5.3)	11.9 (7.4)	17.4 (10.8)
160	6.2 (3.8)	9.0 (5.6)	12.3 (7.6)	17.8 (11.1)
180	6.6 (4.1)	9.5 (5.9)	12.7 (7.9)	18.2 (11.3)
200	7.0 (4.3)	10.0 (6.2)	13.2 (8.2)	18.6 (11.5)
300	8.7 (5.4)	12.2 (7.5)	15.4 (9.6)	20.6 (12.8)
400	10.0 (6.2)	14.1 (8.8)	17.7 (11.0)	22.9 (14.2)
500	11.2 (6.9)	15.9 (9.8)	19.8 (12.3)	25.2 (15.6)
600	12.2 (7.5)	17.5 (10.9)	21.8 (13.6)	27.4 (17.0)
700	13.2 (8.2)	19.0 (11.8)	23.6 (14.7)	29.6 (18.4)
772	13.8 (8.5)	19.9 (12.4)	24.8 (15.4)	31.4 (19.5)
800	14.2 (8.8)	20.1 (12.5)	27.4 (17.1)	31.7 (19.7)
900	14.8 (9.2)	21.6 (13.4)	29.0 (18.0)	33.8 (21.0)
1000	15.8 (9.8)	22.7 (14.1)	31.1 (19.3)	35.9 (22.3)
1100	16.4 (10.2)	23.8 (14.8)	32.7 (20.3)	38.0 (23.6)
1200	17.4 (10.8)	24.8 (15.4)	34.3 (21.3)	40.0 (24.9)
1300	17.9 (11.1)	25.9 (16.1)	35.4 (22.0)	41.7 (25.9)
1400	19.0 (11.8)	26.9 (16.7)	37.0 (23.0)	43.3 (26.9)
1500	19.5 (12.1)	28.0 (17.4)	38.0 (23.6)	44.3 (27.6)
1576	20.1 (12.4)	29.0 (18.0)	39.0 (24.3)	44.4 (28.2)

TABLE 8.—CABLE ATTENUATION @ 68 °F (20 °C) FILLED CABLES—EXPANDED INSULATION

Frequency (kHz)	Attenuation dB/mile (dB/km) Gauge (AWG)			
	19	22	24	26
10	3.0 (1.8)	4.9 (3.0)	6.5 (4.0)	8.6 (5.3)
20	3.5 (2.1)	6.0 (4.1)	8.5 (5.2)	11.5 (7.1)
40	4.0 (2.5)	7.0 (4.3)	10.2 (6.3)	14.4 (8.9)
60	4.5 (2.8)	7.5 (4.6)	11.1 (6.8)	16.0 (9.9)
80	5.2 (3.3)	7.9 (4.9)	11.3 (6.9)	16.2 (10.1)
100	5.8 (3.6)	8.4 (5.2)	11.6 (7.2)	16.4 (10.2)
112	6.0 (3.8)	8.8 (5.4)	11.9 (7.4)	16.6 (10.3)
120	6.2 (3.9)	9.0 (5.6)	12.1 (7.5)	16.9 (10.5)
140	6.6 (4.1)	9.5 (5.9)	12.7 (7.9)	17.2 (10.7)
160	6.9 (4.3)	10.0 (6.2)	13.2 (8.2)	17.4 (10.8)
180	7.4 (4.6)	10.6 (6.6)	13.7 (8.5)	17.9 (11.1)
200	7.9 (4.9)	11.1 (6.9)	14.2 (8.8)	18.5 (11.5)
300	9.5 (5.9)	13.2 (8.2)	16.8 (10.5)	21.6 (13.4)
400	11.1 (6.9)	15.3 (9.5)	19.5 (12.1)	24.3 (15.1)
500	12.1 (7.5)	17.9 (11.1)	22.2 (13.8)	27.4 (17.1)
600	13.7 (8.5)	19.5 (12.1)	24.3 (15.1)	29.6 (18.4)
700	14.8 (9.2)	21.1 (13.1)	26.4 (16.4)	32.2 (20.0)
772	15.3 (9.5)	21.6 (13.4)	27.4 (17.1)	33.8 (21.90)
800	15.8 (9.8)	22.2 (13.8)	28.0 (17.4)	34.4 (21.3)
900	17.0 (10.5)	23.8 (14.8)	29.6 (18.4)	36.4 (22.6)
1000	17.4 (10.8)	24.8 (15.4)	31.1 (19.3)	38.5 (23.9)
1100	17.9 (11.1)	26.4 (16.4)	33.3 (20.7)	40.6 (25.3)
1200	19.0 (11.8)	27.4 (17.1	34.3 (21.3)	42.2 (26.2)
1300	19.5 (12.1)	28.5 (17.7)	35.9 (22.3)	43.8 (27.2)
1400	20.1 (12.5	29.6 (18.4)	37.0 (23.0)	45.9 (28.5)
1500	20.6 (12.8)	30.6 (19.0)	38.5 (23.9)	47.5 (29.5)
1576	21.6 (13.4)	31.1 (19.3)	39.1 (24.3)	48.6 (30.2)

(B) Add the individual losses for each gauge to give the total calculated insertion loss at a temperature of 68°F (20°C);

(C) Correct the total calculated insertion loss at the temperature of 68°F (20°C) to the measurement temperature by the following formulae:

$A_t = A_{68} \times [1 + 0.0012 \times (t - 68)]$ for English Units

$A_t = A_{20} \times [1 + 0.0022 \times (t - 20)]$ for Metric Units

Where:

A_t = Insertion loss at the measurement temperature in dB.

A_{68} = Insertion loss at a temperature of 68°F in dB.

A_{20} = Insertion loss at a temperature of 20°C in dB.

t = Measurement temperature in °F or (°C); and

(D) Compare the calculated insertion loss at the measurement temperature to the measured insertion loss to determine compliance with the requirement specified in paragraph (g)(4)(ii) of this section. (NOTE: Attenuation varies directly with temperature. For each ±10°F (5.6°C) change in temperature increase or decrease the attenuation by ±1%.)

(iv) If the measured value exceeds the ±10% allowable variation, the cause shall be determined and corrective action shall be taken to remedy the problem.

(5) *Data record.* Results of carrier frequency insertion loss measurements for station, T1, and/or T1C type carrier shall be recorded. Suggested formats similar to Format III, Outside Plant Acceptance Tests—T1 or T1C Carrier Pairs, and Format IV, Outside Plant Acceptance Tests—Station Carrier Pairs, in § 1755.407 or formats specified in the applicable construction contract may be used.

(6) *Probable causes for nonconformance.* If the measured loss is low, the cable records are likely to be in error. If the measured loss is high, there may be bridge taps, load coils or voice frequency build-out capacitors connected to the cable pairs or the cable records may be in error. Figures 12 and 13 are examples that show the effects of bridge taps and load coils in the carrier path. Figures 12 and 13 are as follows:

FIGURE 12
EFFECTS OF BRIDGE TAPS ON ATTENUATION

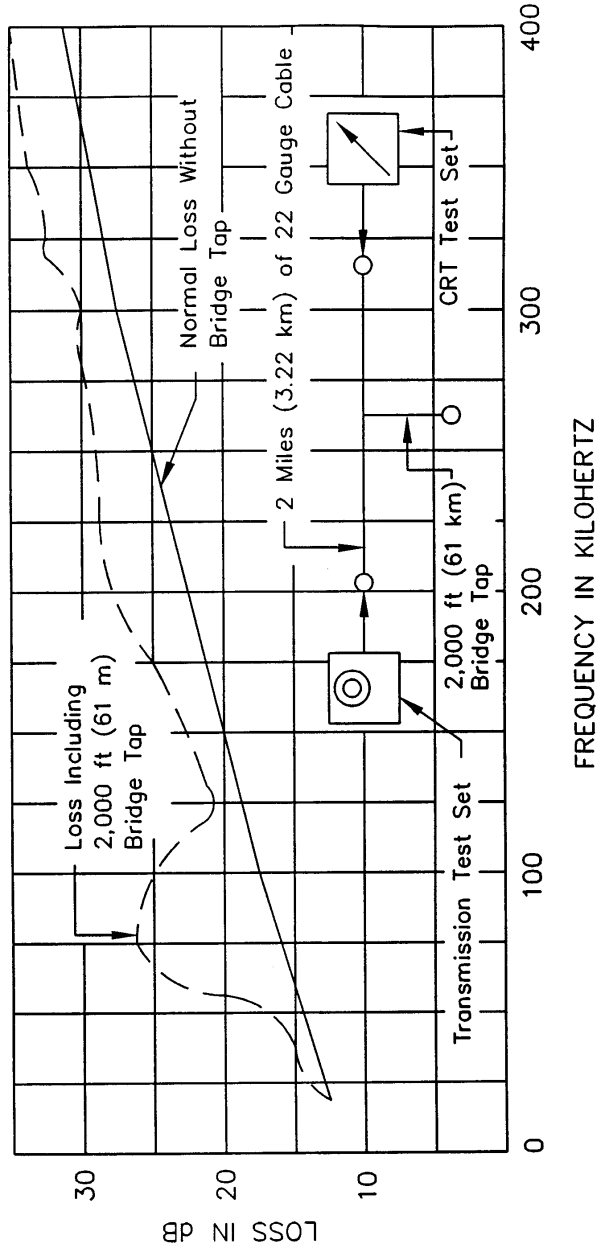

FIGURE 13
EFFECTS OF LOADING COILS ON ATTENUATION

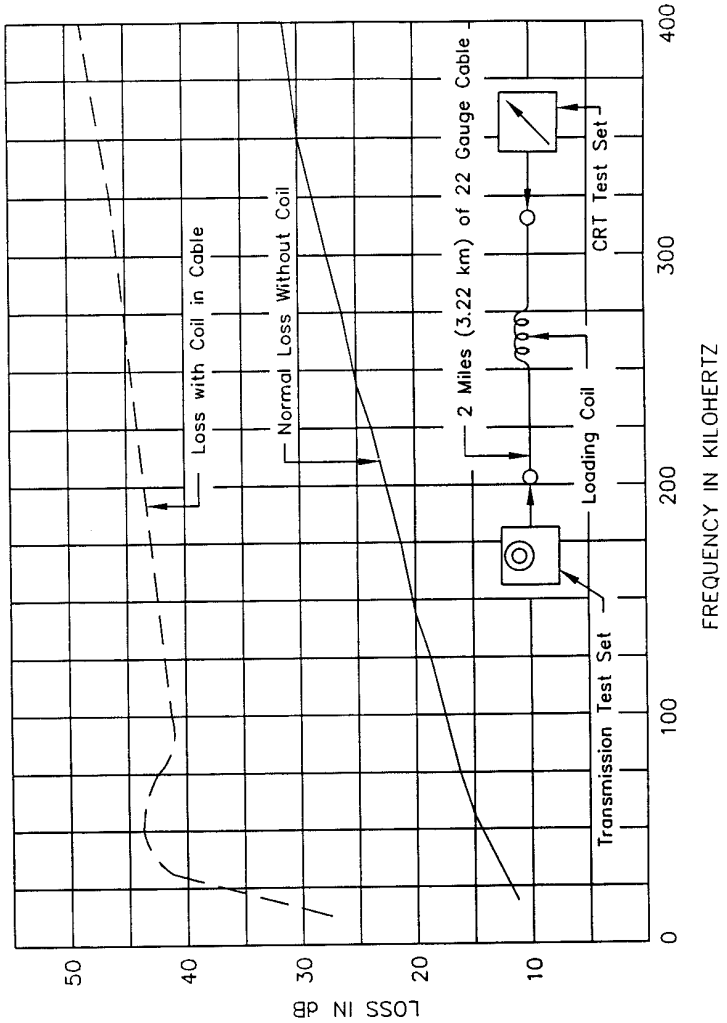

[62 FR 23962, May 2, 1997]

§ 1755.404 Fiber optic cable telecommunications plant measurements.

(a) *Armor continuity.* (1) Tests and measurements shall be made to ensure that the armor of fiber optic cables is continuous. There are two areas of concern. The first is armor bonding within a splice and the second is armor continuity between splices.

(2) Measurement techniques outlined here for verification of armor continuity are applicable to buried fiber optic cable plant. Measurements of armor continuity between splices in aerial, armored, fiber optic cable should be made prior to completion of splicing. Conclusive results cannot be obtained on aerial plant after all bonds have been completed to the supporting strand, multigrounded neutral, etc.

(3) *Method of measurement.* Armor continuity within splices shall be measured with a cable shield splice

continuity test set. The step-by-step measurement procedure outlined in the manufacturer's operating instructions for the specific test equipment being used shall be followed.

(4) *Test equipment.* A cable shield splice continuity tester shall be used to measure armor continuity within splices.

(5) *Applicable results.* When utilizing shield continuity testers to measure armor continuity within splices, refer to the manufacturer's published information covering the specific test equipment to be used and for anticipated results.

(6) *Data record.* Measurement data from armor continuity tests shall be recorded together with anticipated values in an appropriate format to permit comparison. The recorded data shall include specific location, cable size, and cable type, if known, etc.

(7) *Probable causes for nonconformance.* Among probable causes for nonconformance are broken or damaged armors, bad bonding harnesses, poorly connected bonding clamps, loose bonding lugs, etc.

(b) *Fiber optic splice loss measurement.* (1) After placement of all fiber optic cable plant has been completed and spliced together to form a continuous optical link between end termination points, splice loss measurements shall be performed on all field and central office splice points.

(2) *Method of measurement.* (i) Field splice loss measurements shall be made between the end termination points at 1310 and/or 1550 nanometers for single mode fibers and in accordance with Figure 14. Two splice loss measurements shall be made between the end termination points. The first measurement shall be from termination point A to termination point B. The second measurement shall be from termination point B to termination point A.

(ii) CO splice loss measurements shall be made at 1310 and/or 1550 nanometers for single mode fibers and in accordance with Figure 15. Two splice loss measurements shall be made between the end termination points. The first measurement shall be from termination point A to termination point B. The second measurement shall be from termination point B to termination point A.

(3) *Test equipment.* The test equipment is shown in Figures 14 and 15. The optical time domain reflectometer (OTDR) used for the testing should have dual wave length capability. Figures 14 and 15 are as follows:

FIGURE 14

FIBER OPTIC FIELD SPLICE LOSS MEASUREMENT

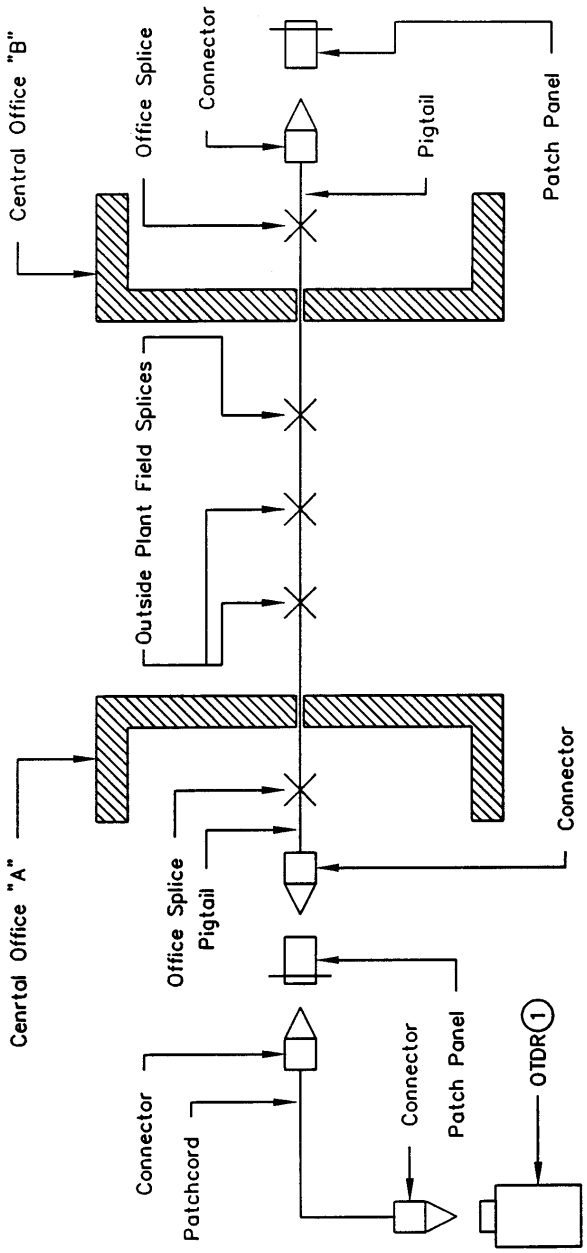

Note:

(1) Tektronix–TFP2, H.P.–8146A, Opto–Electronics–DFM10, Photo Kinetics–6000, or equivalent.

FIGURE 15
FIBER OPTIC CENTRAL OFFICE SPLICE LOSS MEASUREMENT

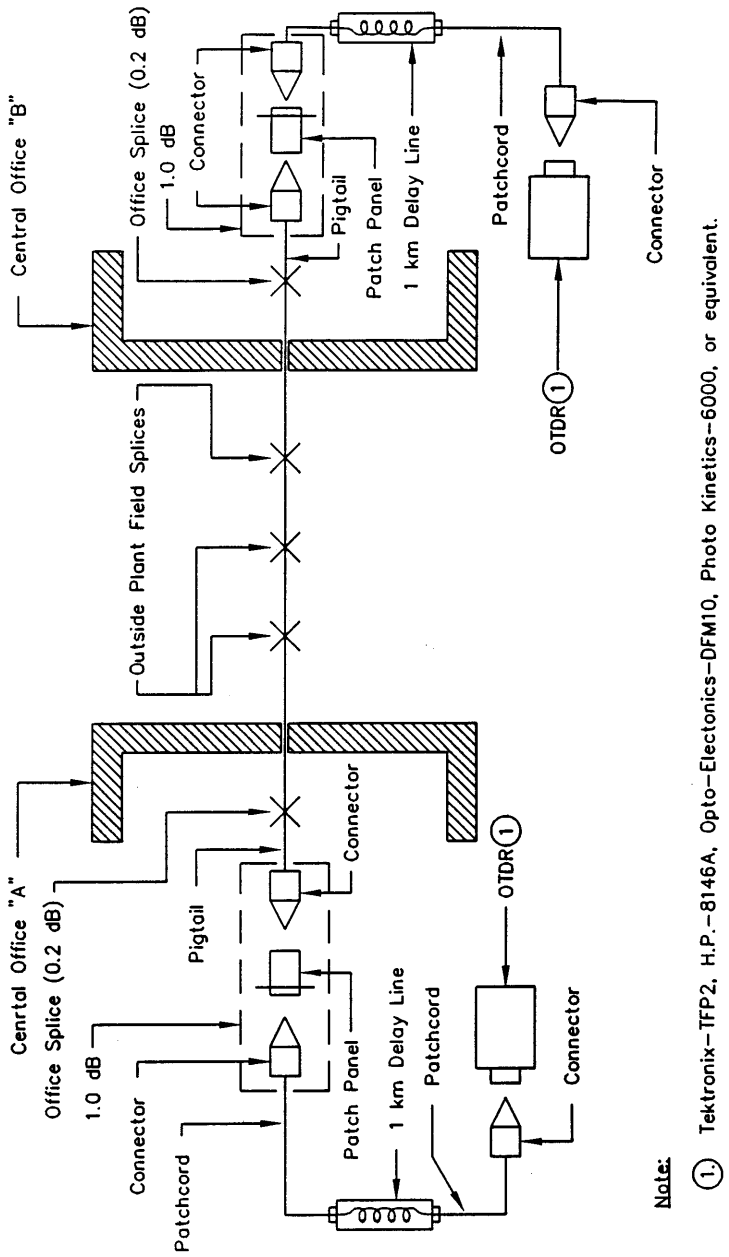

(4) *Applicable results.* (i) The splice loss for each single mode field splice shall be the bi-directional average of the two OTDR readings. To calculate the actual splice loss, substitute the OTDR readings maintaining the sign of the loss (+) or apparent gain (−) into the following equation:

$$\text{Actual Splice Loss (dB)} = \frac{\text{OTDR Reading From A to B} + \text{OTDR Reading From B to A}}{2}$$

(ii) When specified in the applicable construction contract, the splice loss of each field splice at 1310 and/or 1550 nanometers shall not exceed the limit specified in the contract.

(iii) When no limit is specified in the applicable construction contract, the splice loss of each field splice shall not exceed 0.2 dB at 1310 and/or 1550 nanometers.

(iv) The splice loss for each single mode CO splice shall be the bi-directional average of the two OTDR reading. To calculate actual splice loss, substitute the OTDR reading, maintaining the sign of the loss (+) or apparent gain (−), into the equation specified in paragraph (b)(4)(i) of this section.

(v) When specified in the applicable construction contract, the splice loss of each central office splice at 1310 and/or 1550 nanometers shall not exceed the limit specified in the contract.

(vi) When no limit is specified in the applicable construction contract, the splice loss of each central office splice shall not exceed 1.2 dB at 1310 and/or 1550 nanometers.

(5) *Data record.* The measurement data shall be recorded. A suggested format similar to Format V, Outside Plant Acceptance Test—Fiber Optic Telecommunications Plant, in § 1755.407 or a format specified in the applicable construction contract may be used.

(6) *Probable causes for nonconformance.* When the results of the splice loss measurements exceed the specified limits the following factors should be checked:

(i) Proper end preparation of the fibers;

(ii) End separation between the fiber ends;

(iii) Lateral misalignment of fiber cores;

(iv) Angular misalignment of fiber cores;

(v) Fresnel reflection;

(vi) Contamination between fiber ends;

(vii) Core deformation; or

(viii) Mode-field diameter mismatch.

(c) *End-to-end attenuation measurement.* (1) After placement of all fiber optic cable plant has been completed and spliced together to form a continuous optical link between end termination points, end-to-end attenuation measurements shall be performed on each optical fiber within the cable.

(2) *Method of measurement.* For single mode fibers, the end-to-end attenuation measurements of each optical fiber at 1310 and/or 1550 nanometers in each direction between end termination points shall be performed in accordance with Figure 16.

(3) *Test equipment.* The test equipment is shown in Figure 16 as follows:

FIGURE 16

END-TO-END FIBER OPTIC ATTENUATION MEASUREMENT SHOWING MEASUREMENT IN ONE DIRECTION ONLY (2)

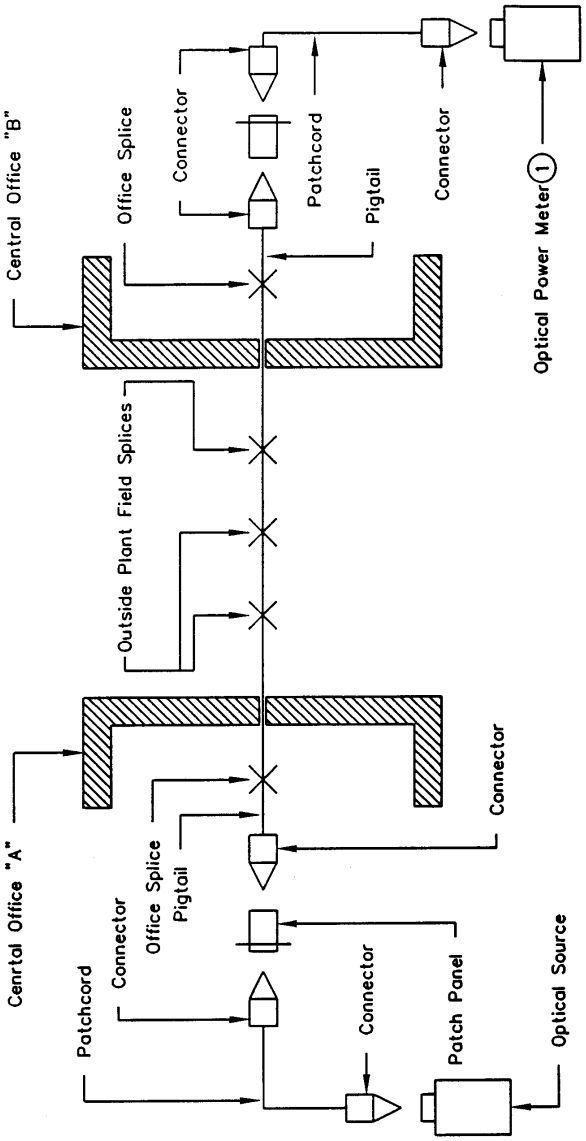

Notes:

(1) H.P.-8153A, Tektronix-OCP5002, Telecommunications Techniques Corp.-131, or equivalent.

(2) Measurement is repeated by reversing location of the optical source and optical power meter in the respective central offices.

(4) *Applicable results.* The end-to-end attenuation of each single mode optical fiber at 1310 and/or 1550 nanometers shall not exceed the limits specified in the applicable construction contract.

(5) *Data record.* The measurement data shall be recorded. A suggested format similar to Format V for fiber optic telecommunications plant in §1755.407 or on a format specified in the applicable construction contract may be used.

(6) *Probable causes for nonconformance.* Failure of each optical fiber to meet the end-to-end attenuation limit could be attributed to the following:

(i) Excessive field or central office splice loss;

(ii) Excessive cable attenuation; or

(iii) Damage to the fiber optic cable during installation.

(d) *End-to-end fiber signature measurement.* (1) After placement of all fiber optic cable plant has been completed and spliced together to form a continuous optical link between end termination points, end-to-end fiber signature testing shall be performed on each optical fiber within the cable.

(2) *Method of measurement.* For single mode fibers, the end-to-end fiber signature measurement of each optical fiber in each direction shall be performed between end termination points at 1310 and/or 1550 nanometers in accordance with Figure 17.

(3) *Test equipment.* The test equipment is shown in Figure 17 as follows:

FIGURE 17

END–TO–END FIBER OPTIC SIGNATURE MEASUREMENT SHOWING MEASUREMENT IN ONE DIRECTION ONLY (2)

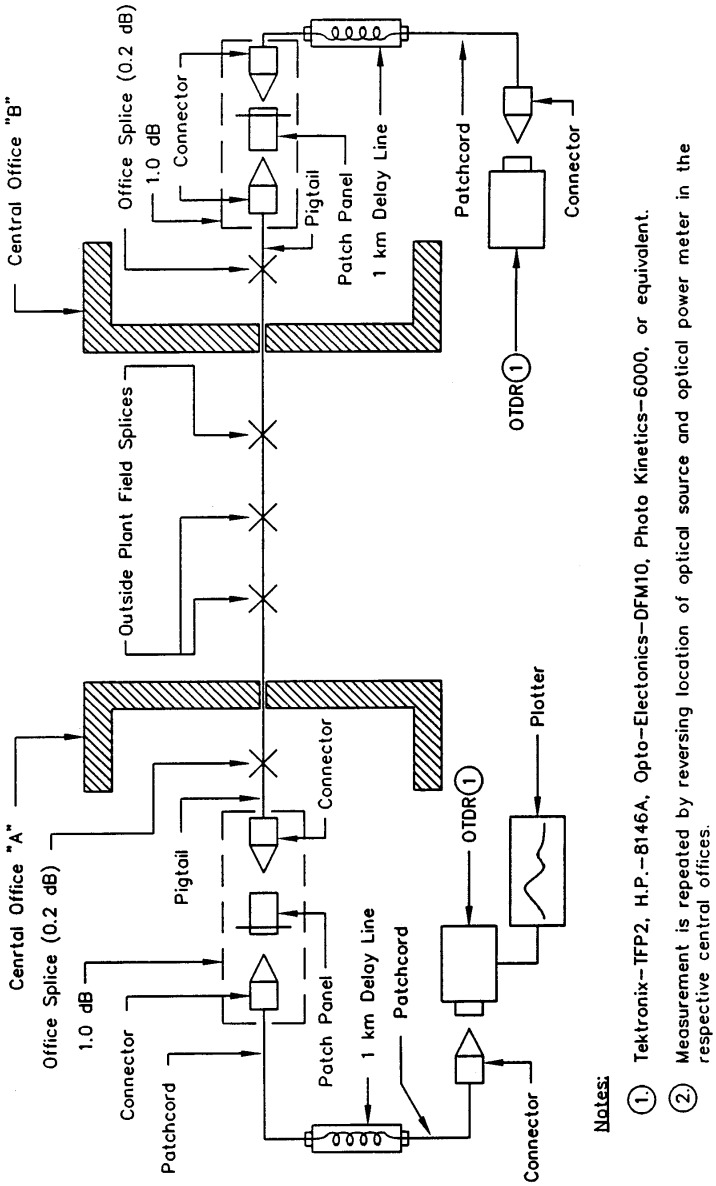

Notes:

(1) Tektronix–TFP2, H.P.–8146A, Opto–Electonics–DFM10, Photo Kinetics–6000, or equivalent.

(2) Measurement is repeated by reversing location of optical source and optical power meter in the respective central offices.

(4) *Applicable results.* The appearance of each optical fiber between end termination points.

(5) *Data record.* Plot the trace of each optical fiber and retain as a permanent record for future comparison if needed.

(6) *Probable causes for nonconformance.* None.

[62 FR 23989, May 2, 1997; 62 FR 25017, May 7, 1997]

§ 1755.405 Voiceband data transmission measurements.

(a) The data transmission measurements listed in this section shall be used to determine the acceptability of trunk and nonloaded subscriber loop circuits for data modem transmission.

(b) *Signal-to-C notched noise (S/CNN) measurement.* (1) When specified by the borrower, S/CNN measurements shall be made on trunk circuits and nonloaded subscriber loops. For trunk circuits, the measurement shall be made between CO locations. For nonloaded subscriber loops, the measurement shall be made from the CO to the station protector of the NID at the customer's access location.

(2) S/CNN is the logarithmic ratio expressed in dB of a 1,004 Hz holding tone signal compared to the C-message weighted noise level. S/CNN is one of the most important transmission parameters affecting the performance of data transmission because proper modem operation requires low noise relative to received power level. Since modulated carriers are used in data communication systems, noise measurements need to be performed with power on the connection to activate equipment having signal-level-dependent noise sources. For 4 kHz channels, a 1,004 Hz holding tone is used to activate the signal-dependent equipment on the channel or connection.

(3) *Method of measurement.* The S/CNN measurement shall be made using a 1,004 Hz holding tone at −13 dBm0 (decibels relative to one milliwatt, referred to a zero transmission level point) and performed in accordance with American National Standards Institute (ANSI) T1.506–1990, American National Standard for Telecommunications—Network Performance—Transmission Specifications for Switched Exchange Access Network including supplement ANSI T1.506a–1992, and American National Standards Institute/Institute of Electrical and Electronics Engineers (ANSI/IEEE) 743–1984, IEEE Standard Methods and Equipment for Measuring the Transmission Characteristics of Analog Voice Frequency Circuits. The ANSI T1.506–1990, American National Standard for Telecommunications—Network Performance—Transmission Specifications for Switched Exchange Access Network is incorporated by reference in accordance with 5 U.S.C. 522(a) and 1 CFR part 51. Copies of ANSI T1.506–1990 are available for inspection during normal business hours at RUS, room 2845, U.S. Department of Agriculture, STOP 1598, Washington, DC 20250–1598 or at the Office of the Federal Register, 800 North Capitol Street, NW., suite 700, Washington, DC. Copies are available from ANSI, Customer Service, 11 West 42nd Street, New York, New York 10036, telephone number (212) 642–4900. The ANSI/IEEE 743–1984, IEEE Standard Methods and Equipment for Measuring the Transmission Characteristics of Analog Voice Frequency Circuits is incorporated by reference in accordance with 5 U.S.C. 522(a) and 1 CFR part 51. Copies of ANSI/IEEE 743–1984 are available for inspection during normal business hours at RUS, room 2845, U.S. Department of Agriculture, STOP 1598, Washington, DC 20250–1598 or at the Office of the Federal Register, 800 North Capitol Street, NW., suite 700, Washington, DC. Copies are available from ANSI, Customer Service, 11 West 42nd Street, New York, New York 10036, telephone number (212) 642–4900.

(4) *Test equipment.* The equipment for performing the measurement shall be in accordance with ANSI/IEEE 743–1984.

(5) *Applicable results.* The S/CNN for both trunk and nonloaded subscriber loop circuits shall not be less than 31 dB.

(6) *Data record.* The measurement data shall be recorded. Suggested formats similar to Format VI, Voiceband Data Transmission Tests—Nonloaded Subscriber Loops, and Format VII, Voiceband Data Transmission Tests—Trunk Circuits, in § 1755.407 or formats specified in the applicable construction contract may be used.

(7) *Probable causes for nonconformance.* Some of the causes for failing to obtain the desired results may be due to excessive harmonic distortion, quantizing noise, phase and amplitude jitter, and loss in digital pads used for level settings.

(c) *Signal-to-intermodulation distortion (S/IMD) measurement.* (1) When specified by the borrower, S/IMD measurements shall be made on trunk circuits and nonloaded subscriber loops. For trunk

circuits, the measurement shall be made between CO locations. For nonloaded subscriber loops, the measurement shall be made from the CO to the station protector of the NID at the customer's access location.

(2) S/IMD is a measure of the distortion produced by extraneous frequency cross products, known as intermodulation products, when a multi-tone tone signal is applied to a system.

(3) Intermodulation distortion (IMD) is caused by system nonlinearities acting upon the harmonic frequencies produced from an input of multiple tones. The products resulting from IMD can be more damaging than noise in terms of producing data transmission errors.

(4) IMD is measured as a signal to distortion ratio and is expressed as the logarithmic ratio in dB of the composite power of four resulting test frequencies to the total power of specific higher order distortion products that are produced. The higher order products are measured at both the 2nd order and 3rd order and are designated R2 and R3, respectively. The four frequency testing for IMD is produced with four tones of 857, 863, 1,372, and 1,388 Hz input at a composite power level of −13 dBm0.

(5) *Method of measurement.* The S/IMD measurement shall be performed in accordance with ANSI T1.506–1990 and ANSI/IEEE 743–1984.

(6) *Test equipment.* The equipment for performing the measurement shall be in accordance with ANSI/IEEE 743–1984.

(7) *Applicable results.* The 2nd order (R2) S/IMD for both trunk and nonloaded subscriber loop circuits shall not be less than 40 dB. The 3rd order (R3) S/IMD for both trunk and nonloaded subscriber loop circuits shall not be less than 40 dB.

(8) *Data record.* The measurement data shall be recorded. Suggested formats similar to Format VI for nonloaded subscriber loops and Format VII for trunk circuits in § 1755.407 or formats specified in the applicable construction contract may be used.

(9) *Probable causes for nonconformance.* Some of the causes for failing to obtain the desired results may be due to channel nonlinearities, such as compression and clipping, which cause harmonic and intermodulation distortion in a voiceband signal.

(d) *Envelope delay distortion (EDD) measurement.* (1) When specified by the borrower, EDD measurements shall be made on trunk circuits and nonloaded subscriber loops. For trunk circuits, the measurement shall be made between CO locations. For nonloaded subscriber loops, the measurement shall be made from the CO to the station protector of the NID at the customer's access location.

(2) EDD is a measure of the linearity or uniformity of the phase versus frequency characteristics of a transmission facility. EDD is also known as relative envelope delay (RED).

(3) EDD is specifically defined as the delay relative to the envelope delay at the reference frequency of 1,704 Hz. EDD is typically measured at two frequencies, one low and one high in the voiceband. The low frequency measurement is made at 604 Hz. The high frequency measurement is made at 2,804 Hz.

(4) *Method of measurement.* The EDD measurement shall be performed in accordance with ANSI T1.506–1990 and ANSI/IEEE 743–1984.

(5) *Test equipment.* The equipment for performing the measurement shall be in accordance with ANSI/IEEE 743–1984.

(6) *Applicable results.* The EDD for both trunk and nonloaded subscriber loop circuits at the low frequency of 604 Hz shall not exceed 1,500 microseconds. The EDD for both trunk and nonloaded subscriber loop circuits at the high frequency of 2,804 Hz shall not exceed 1,000 microseconds.

(7) *Data record.* The measurement data shall be recorded. Suggested formats similar to Format VI for nonloaded subscriber loops and Format VII for trunk circuits in § 1755.407 or formats specified in the applicable construction contract may be used.

(8) *Probable causes for nonconformance.* Some of the causes for failing to obtain the desired results may be due to nonlinearity of the phase versus frequency characteristic of the transmission facility. This nonlinear phase versus frequency characteristic of the transmission facility causes the various frequency components to travel at different transit times which results in

successively transmitted data pulses to overlap at the receive end. The overlapping of the pulses at the receive end results in distortion of the received signal. Excessive EDD on the transmission facility may be reduced using data modems with equalization or by conditioning the transmission line.

(e) *Amplitude jitter (AJ) measurement.* (1) When specified by the borrower, AJ measurements shall be made on trunk circuits and nonloaded subscriber loops. For trunk circuits, the measurement shall be made between CO locations. For nonloaded subscriber loops, the measurement shall be made from the CO to the station protector of the NID at the customer's access location.

(2) AJ is any fluctuation in the peak amplitude value of a fixed tone signal at 1,004 Hz from its nominal value. AJ is expressed in peak percent amplitude modulation.

(3) AJ is measured in two separate frequency bands, 4–300 Hz and 20—300 Hz. The 4—300 Hz band is important for modems employing echo canceling capabilities. The 20–300 Hz band is used for modems that do not employ echo cancelers.

(4) Amplitude modulation can affect the error performance of voiceband data modems. The measurement of amplitude jitter indicates the total effect on the amplitude of the holding tone of incidental amplitude modulation and other sources including quantizing and message noise, impulse noise, gain hits, phase jitter, and additive tones such as single-frequency interference.

(5) *Method of measurement.* The AJ measurement shall be performed in accordance with ANSI T1.506–1990 and ANSI/IEEE 743–1984.

(6) *Test equipment.* The equipment for performing the measurement shall be in accordance with ANSI/IEEE 743–1984.

(7) *Applicable results.* The AJ for both trunk and nonloaded subscriber loop circuits in the 4—300 Hz frequency band shall not exceed 6%. The AJ for both trunk and nonloaded subscriber loop circuits in the 20—300 Hz frequency band shall not exceed 5%.

(8) *Data record.* The measurement data shall be recorded. Suggested formats similar to Format VI for nonloaded subscriber loops and Format VII for trunk circuits in § 1755.407 or formats specified in the applicable construction contract may be used.

(9) *Probable causes for nonconformance.* Some of the causes for failing to obtain the desired results may be due to excessive S/CNN, impulse noise, and phase jitter.

(f) *Phase jitter (PJ) measurement.* (1) When specified by the borrower, PJ measurements shall be made on trunk circuits and nonloaded subscriber loops. For trunk circuits, the measurement shall be made between CO locations. For nonloaded subscriber loops, the measurement shall be made from the CO to the station protector of the NID at the customer's access location.

(2) PJ is any fluctuation in the zero crossings of a fixed tone signal (usually 1,004 Hz) from their nominal position in time within the voiceband. PJ is expressed in terms of either degrees peak-to-peak (°p–p) or in terms of a Unit Interval (UI). One UI is equal to 360° p–p.

(3) PJ measurements are typically performed in two nominal frequency bands. The frequency bands are 20–300 Hz band and either the 2–300 Hz band or the 4–300 Hz band. The 20–300 Hz band is important to all phase-detecting modems. The 4–300 Hz band or the 2–300 Hz band is important for modems employing echo canceling capabilities.

(4) Phase jitter can affect the error performance of voiceband data modems that use phase detection techniques. The measurement of phase jitter indicates the total effect on the holding tone of incidental phase modulation and other sources including quantizing and message noise, impulse noise, phase hits, additive tones such as single-frequency interference, and digital timing jitter.

(5) *Method of measurement.* The PJ measurement shall be performed in accordance with ANSI T1.506–1990 and ANSI/IEEE 743–1984.

(6) *Test equipment.* The equipment for performing the measurement shall be in accordance with ANSI/IEEE 743–1984.

(7) *Applicable results.* The PJ for both trunk and nonloaded subscriber loop circuits in the 4–300 Hz frequency band shall not exceed 6.5° p–p. The PJ for both trunk and nonloaded subscriber loop circuits in the 20–300 Hz frequency band shall not exceed 10.0° p–p.

(8) *Data record.* The measurement data shall be recorded. Suggested formats similar to Format VI for nonloaded subscriber loops and Format VII for trunk circuits in §1755.407 or formats specified in the applicable construction contract may be used.

(9) *Probable causes for nonconformance.* Some of the causes for failing to obtain the desired results may be due to excessive S/CNN, impulse noise, and amplitude jitter.

(g) *Impulse noise measurement.* (1) When specified by the borrower, impulse noise measurements shall be made on trunk circuits and nonloaded subscriber loops. For trunk circuits, the measurement shall be made between CO locations. For nonloaded subscriber loops, the measurement shall be made from the CO to the station protector of the NID at the customer's access location.

(2) Impulse noise is a measure of the presence of unusually large noise excursions of short duration that are beyond the normal background noise levels on a facility. Impulse noise is typically measured by counting the number of occurrences beyond a particular noise reference threshold in a given time interval. The noise reference level is C-message weighted.

(3) *Method of measurement.* The impulse noise measurement shall be performed using a 1,004 Hz tone at –13 dBm0 and in accordance with ANSI T1.506–1990 and ANSI/IEEE 743–1984.

(4) *Test equipment.* The equipment for performing the measurement shall be in accordance with ANSI/IEEE 743–1984.

(5) *Applicable results.* The impulse noise for both trunk and nonloaded subscriber loop circuits shall not exceed 65 dBrnC0 (decibels relative to one picowatt reference noise level, measured with C-message frequency weighting, referred to a zero transmission level point). The impulse noise requirement shall be based upon a maximum of 5 counts in a 5 minute period at equal to or greater than the indicated noise thresholds.

(6) *Data record.* The measurement data shall be recorded. Suggested formats similar to Format VI for nonloaded subscriber loops and Format VII for trunk circuits in §1755.407 or formats specified in the applicable construction contract may be used.

(7) *Probable causes for nonconformance.* Some of the causes for failing to obtain the desired results may be due to excessive transient signals originating from the various switching operations.

[62 FR 23996, May 2, 1997]

§1755.406 Shield or armor ground resistance measurements.

(a) Shield or armor ground resistance measurements shall be made on completed lengths of copper cable and wire plant and fiber optic cable plant.

(b) *Method of measurement.* (1) The shield or armor ground resistance measurement shall be made between the copper cable and wire shield and ground and between the fiber optic cable armor and ground, respectively. The measurement shall be made either on cable and wire lengths before splicing and before any ground connections are made to the cable or wire shields or armors. Optionally, the measurement may be made on cable and wire lengths after splicing, but all ground connections must be removed from the section under test.

(2) The method of measurement using either an insulation resistance test set or a dc bridge type megohmmeter shall be as shown in Figure 18 as follows:

FIGURE 18

SHIELD OR ARMOR GROUND RESISTANCE MEASUREMENT

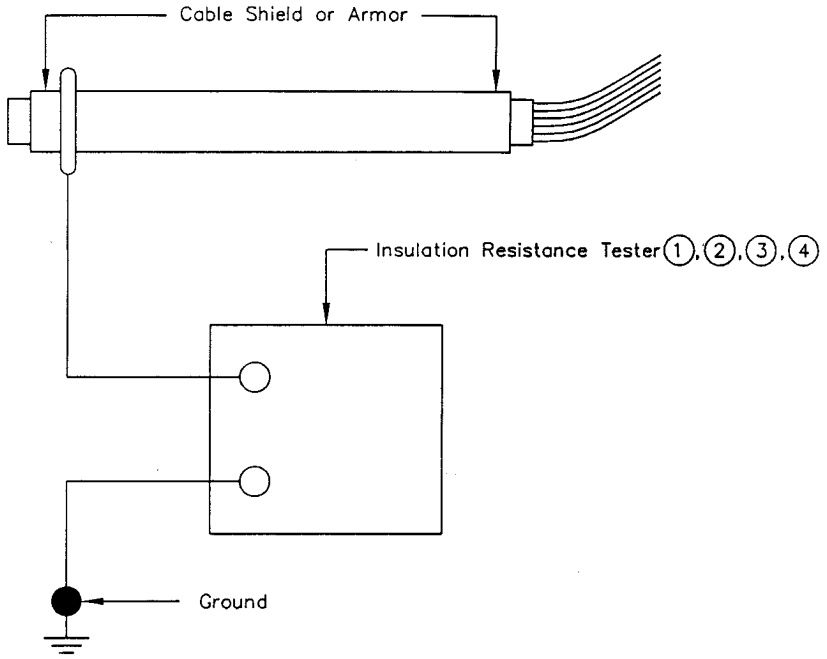

Notes:

(1.) For hand cranked or battery operated Insulation Resistance Testers, the output voltage should not exceed 500 volts dc.

(2.) For dc bridge type Megohmmeters, the voltage applied to the shield or armor under test should not be less than 250 volts dc nor greater than 1000 volts dc when using instruments having adjustable test voltage levels.

(3.) When the distance between test points results in a measurement beyond the range of the test equipment, extended range devices recommended by the test equipment manufacturer may be used to assist in making the measurement.

(4.) Biddle CO.–Model BM 200, Associate Research–Model 263, General Radio–1864 Megohm Meter, or equivalent.

(c) *Test equipment.* (1) The shield or armor ground resistance measurements may be made using an insulation resistance test set, a dc bridge type megohmmeter, or a commercially available fault locator.

(2) The insulation resistance test set should have an output voltage not to exceed 500 volts dc and may be hand cranked or battery operated.

(3) The dc bridge type megohmmeter, which may be ac powered, should have

scales and multipliers which make it possible to accurately read resistance values of 50,000 ohms to 10 megohms. The voltage that is applied to the shield or armor during the test should not be less than ''250 volts dc'' nor greater than ''1,000 volts dc'' when using an instrument having adjustable test voltage levels.

(4) Commercially available fault locators may be used in lieu of the above equipment, if the devices are capable of detecting faults having resistance values of 50,000 ohms to 10 megohms. Operation of the devices and method of locating the faults should be in accordance with manufacturer's instructions.

(d) *Applicable results.* (1) For all new copper cable and wire facilities and all new fiber optic cable facilities, the shield or armor ground resistance levels normally exceed 1 megohm-mile (1.6 megohm-km) at 68°F (20°C). A value of 100,000 ohm-mile (161,000 ohm-km) at 68°F (20°C) shall be the minimum acceptable value of the shield or armor ground resistance.

(2) Shield or armor ground resistance varies inversely with length and temperature. In addition other factors which may affect readings could be soil conditions, faulty test equipment and incorrect test procedures.

(3) For the resistance test method and dc bridge type megohmmeter, the ohm-mile (ohm-km) value for the shield or armor ground resistance shall be computed by multiplying the actual scale reading in ohms on the test set by the length in miles (km) of the cable or wire under test.

(4)(i) The objective shield or armor ground resistance may be determined by dividing 100,000 by the length in miles (161,000 by the length in km) of the cable or wire under test. The resulting value is the minimum acceptable meter scale reading in ohms. Examples for paragraphs (d)(3) and (d)(4) of this section are as follows:

Equation 1. Test Set: Scale Reading * Length = Resistance-Length

75,000 ohms * 3 miles = 225,000 ohm-mile

(75,000 ohms * 4.9 km = 367,000 ohm-km)

Equation 2. 100,000 ohm-mile ÷ Length = Minimum Acceptable Meter Scale Reading

100,000 ohm-mile ÷ 3 miles = 33,333 ohms

(161,000 ohm-km ÷ 4.9 km = 32,857 ohms)

(ii) Since the 33,333 ohms (32,857 ohms) is the minimum acceptable meter scale reading and the meter scale reading was 75,000 ohms, the cable is considered to have met the 100,000 ohm-mile (161,000 ohm-km) requirement.

(5) Due to the differences between various jacketing materials used in manufacturing cable or wire and to varying soil conditions, it is impractical to provide simple factors to predict the magnitude of variation in shield or armor to ground resistance due to temperature. The variations can, however, be substantial for wide excursions in temperature from the ambient temperature of 68°F (20°C).

(e) *Data record.* The data shall be corrected to the length requirement of ohm-mile (ohm-km) and a temperature of 68°F (20°C) and shall be recorded on a form specified in the applicable construction contract.

(f) *Probable causes for nonconformance.* (1) When results of resistance measurements are below the 100,000 ohm-mile (161,000 ohm-km) requirement at 68°F (20°C), the jacket temperature, soil conditions, test equipment and method shall be reviewed before the cable or wire is considered a failure. If the temperature is approximately 68°F (20°C) and soil conditions are acceptable, and a reading of less than 100,000 ohm-mile (161,000 ohm-km) is indicated, check the calibration of the equipment; as well as, the test method. If the equipment was found to be out of calibration, recalibrate the equipment and remeasure the cable or wire. If the temperature was 86°F (30°C) or higher, the cable or wire shall be remeasured at a time when the temperature is approximately 68°F (20°C). If the test was performed in unusually wet soil, the cable or wire shall be retested after the soil has reached normal conditions. If after completion of the above steps, the resistance value of 100,000 ohm-mile (161,000 ohm-km) or greater is obtained, the cable or wire shall be considered acceptable.

(2) When the resistance value of the cable or wire is still found to be below 100,000 ohm-mile (161,000 ohm-km) requirement after completion of the steps listed in paragraph (f)(1) of this section, the fault shall be isolated by

performing shield or armor ground resistance measurements on individual cable or wire sections.

(3) Once the fault or faults have been isolated, the cable or wire jacket shall be repaired in accordance with § 1755.200, RUS Standard for Splicing Copper and Fiber Optic Cables or the entire cable or wire section may be replaced at the request of the borrower.

[62 FR 23998, May 2, 1997]

§ 1755.407 Data formats.

The following suggested formats listed in this section may be used for recording the test data:

FORMAT I

OUTSIDE PLANT ACCEPTANCE TESTS – SUBSCRIBER LOOPS

PROJECT: _____ Date of Test: _____

CO NAME OF LOCATION: _____ Time Measured: _____ Tester (Contractor): _____

CO or RST GROUND RESISTANCE: _____ Ohms (Before tying to elect. neutral) Temperature: _____ Tester (Engineer): _____

CO or RST GROUND RESISTANCE: _____ Ohms (After tying to elect. neutral) Soil Type: _____ Tester (Borrower): _____

Test Equip.: _____ Moisture Content of Soil: _____

Route No.	Pair No.	Length (Miles or km)	DC Insul. Resist. (Megohms)			DC Loop Resist. (Ohms)			Measd. DC Res. Unbal. (Ohms)	Open Ckt Meas. Type (a,b,c,d)		Insertion Loss at kHz Shown					Line Noise			
			T–GD	R–GD	Min. Permit	Comp. 68°F (20°C)	Measd. °F (___°C)	Corr. 68°F (20°C)		SRL (dB)	Freq. (kHz)	1.0	1.7	2.3	2.8	3.4	4.0	NMC	NG–C	NGF	Bal.

Shield or Shield/Armor Continuity Data has been attached. Yes ___ No___

FORMAT II

OUTSIDE PLANT ACCEPTANCE TESTS – TRUNKS CIRCUITS

PROJECT: _____ Date of Test: _____

CO NAME OF LOCATION: _____ Tester (Contractor): _____

OFFICE A: _____ Tester (Engineer): _____

OFFICE B: _____ Tester (Borrower): _____

ELECTRONIC EQUIPMENT GROUND RESISTANCE: _____ Ohms

Time Measured: _____ Soil Type: _____ Test Equip: _____

Temperature: _____ Moisture Content of Soil: _____

In the space below show in a simple line diagram the facility makeup including all gauges, lengths, cable types, and repeater locations if any.

Trunk No.	Pair No. Off. A	Pair No. Off. B	Length Miles or km	DC Insul. Resist. (Megohms)			DC Loop Resist. (Ohms)			Measd DC Res. Unbal. (Ohms)
				T–GD	R–GD	Min. Permit	Comp. 68°F (20°C)	Measd. ___°F (___°C)	Corr. 68°F (20°C)	

FORMAT III

OUTSIDE PLANT ACCEPTANCE TESTS – T1 or T1C CARRIER PAIRS

PROJECT: _____ Type of Proposed Carrier: _____ (Trunk – Subscriber)

LOCATION: From _____ (CO Name) to _____ (CO Name) Shield or Shield/Armor Continuity has been checked: _____

Aerial: _____ Buried: _____ Weather: _____ Temp.: _____ Date: _____ Sheet ____ of ____

CARRIER FREQUENCY INSERTION LOSS MEASUREMENTS (1)

From_____ to_____					From_____ to_____				
Freq (2) (kHz)	Send Level (dBm)	Receive Level(dBm)	Measured Loss(dB)	Estimated (3) Loss (dB)	Freq (2) (kHz)	Send Level (dBm)	Receive Level(dBm)	Measured Loss(dB)	Estimated (3) Loss (dB)
20					20				
60					60				
100					100				
140					140				
180					180				
200					200				
300					300				
400					400				
600					600				
700					700				
772					772				
800					800				
1000					1000				
1200					1200				
1300					1300				
1400					1400				
1500					1500				
1576					1576				

Notes: (1) Refer to RUS TE&CM 925 on How to Make Measurements. (2) Go as high in frequency as required by contract.
(3) From either Table 7 or 8 in Paragraph (g)(4)(iii)(A) of Section 1755.403; Correct loss for temperature.

FORMAT IV

OUTSIDE PLANT ACCEPTANCE TESTS – STATION CARRIER PAIRS

PROJECT: _____ Type of Proposed Carrier: _____ (Trunk – Subscriber)

LOCATION: From _____ (CO Name) to _____ (Sub.) Shield or Shield/Armor Continuity has been checked: _____

Aerial: _____ Buried: _____ Weather: _____ Temp.: _____ Date: _____ Sheet ____ of ____

CARRIER FREQUENCY INSERTION LOSS MEASUREMENTS (1)

From _____ to _____					From _____ to _____				
Freq. (kHz)	Send Level (dBm)	Receive Level(dBm)	Measured Loss(dB)	Estimated (2) Loss (dB)	Freq. (kHz)	Send Level (dBm)	Receive Level(dBm)	Measured Loss(dB)	Estimated (2) Loss (dB)
20					20				
60					60				
100					100				
112					112				
140					140				

From _____ to _____					From _____ to _____				
Freq. (kHz)	Send Level (dBm)	Receive Level(dBm)	Measured Loss(dB)	Estimated (2) Loss (dB)	Freq. (kHz)	Send Level (dBm)	Receive Level(dBm)	Measured Loss(dB)	Estimated (2) Loss (dB)
20					20				
60					60				
100					100				
112					112				
140					140				

Notes:

(1) Refer to RUS TE&CM 925 on How to Make Measurements.

(2) From either Table 7 or 8 in Paragraph (g)(4)(iii)(A) of Section 1755.403; correct loss for temperature.

FORMAT V

OUTSIDE PLANT ACCEPTANCE TESTS

FIBER OPTIC TELECOMMUNICATIONS PLANT

PROJECT: _____ Date of Test: _____

TERMINATION POINT A: _____ Tester (Contractor): _____

TERMINATION POINT B: _____ Tester (Engineer): _____

Time Measured: _____ Tester (Borrower): _____

Temperature: _____ Test Equip: _____

Soil Type: _____ Moisture Content of Soil: _____

Route No.	Fiber No.	Length Miles or km	Splice Loss (dB)		End-to-End Attenuation (dB/km)	End-to-End Fiber Signature	
			FIELD	CO		Yes	No

Armor Continuity Data has been attached. Yes ___ No ___

FORMAT VI

VOICEBAND DATA TRANSMISSION TESTS – NONLOADED SUBSCRIBER LOOPS

PROJECT: _____

LOCATION: From _____ (CO Name) to _____ (Sub. Name)

TEMPERATURE: _____ DATE: _____

AERIAL: _____

BURIED: _____

UNDERGROUND: _____

Date of Test: _____

Tester (Contractor): _____

Tester (Engineer): _____

Tester (Borrower): _____

Test Equip.: _____ Sheet ____ of ____

Route No.	Pair No.	Length (Miles or km)	S/CNN 1,004 Hz Tone at −13 dBm0 (dB)	S/IMD (dB)		Impulse Noise (dBrnC0)	EDD (Microseconds)		AJ (%)		PJ (°p−p)	
				R2	R3		604 Hz	2,804 Hz	4 to 300 Hz	20 to 300 Hz	4 to 300 Hz	20 to 300 Hz

FORMAT VII

VOICEBAND DATA TRANSMISSION TESTS – TRUNK CIRCUITS

PROJECT: _____ Date of Test: _____

LOCATION: From _____ (CO Name) to _____ (CO Name) AERIAL: _____ Tester (Contractor): _____

BURIED: _____ Tester (Engineer): _____

TEMPERATURE: _____ DATE: _____ UNDERGROUND: _____ Tester (Borrower): _____

Test Equip.: _____ Sheet _____ of _____

Trunk No.	Pair No. CO–A	Pair No. CO–B	Length (Miles or km)	S/CNN 1,004 Hz Tone at −13 dBm0 (dB)	S/IMD (dB)		Impulse Noise (dBrnC0)	EDD (Microseconds)		AJ (%)		PJ (°p–p)	
					R2	R3		604 Hz	2,804 Hz	4 to 300 Hz	20 to 300 Hz	4 to 300 Hz	20 to 300 Hz

[62 FR 24000, May 2, 1997]

§§ 1755.408—1755.521 [Reserved]

§ 1755.522 RUS general specification for digital, stored program controlled central office equipment.

(a) *General.* (1) This section covers general requirements for a digital telephone central office switching system, which is fully electronic and controlled by stored program processors. A digital switching system transfers information which is digitally encoded from any input port to a temporarily addressed exit port. The information may enter the system in either analog or digital form and may or may not be converted to analog at the exit port depending on the facility beyond. The switching system shall operate properly as an integral part of the telephone network when connected to physical and carrier derived circuits meeting RUS specifications and other generally accepted telecommunications practices.

(2) The output of a digital-to-digital port shall be Pulse Code Modulation

(PCM), encoded in eight-bit words using the mu-255 encoding law and D3 encoding format, and arranged to interface with a T1 span line.

(3) American National Standards Institute (ANSI) Standard S1.4–1983, Specification for Sound Level Meters, is incorporated by reference by RUS. This includes S1.4A-1985 that is also incorporated by reference. This incorporation by reference was approved by the Director of the Federal Register in accordance with 5 U.S.C. 552(a) and 1 CFR part 51. Copies may be obtained from ANSI Inc., 11 West 42nd Street, 13th Floor, New York, NY 10036, telephone 212–642–4900. Copies may be inspected during normal business hours at RUS, room 2838-S, U.S. Department of Agriculture, Washington, DC 20250 or at the Office of the Federal Register, 800 North Capitol Street, NW., suite 700, Washington, DC.

(4) American Society for Testing Materials (ASTM) Specification B 33–91, Standard Specification for Tinned Soft or Annealed Copper Wire for Electrical Purposes, is incorporated by reference by RUS. This incorporation by reference was approved by the Director of the Federal Register in accordance with 5 U.S.C. 552(a) and 1 CFR part 51. Copies may be obtained from ASTM, 1916 Race Street, Philadelphia, PA, telephone 215–299–5400. Copies may be inspected during normal business hours at RUS, room 2838-S, U.S. Department of Agriculture, Washington, DC 20250 or at the Office of the Federal Register, 800 North Capitol Street, NW., suite 700, Washington, DC.

(5) Bell Communications Research (Bellcore) document SR-TSV-002275, BOC Notes on the LEC Networks—1990, March 1991, is incorporated by reference by RUS. This incorporation by reference was approved by the Director of the Federal Register in accordance with 5 U.S.C. 552(a) and 1 CFR Part 51. Copies may be obtained from Bellcore Customer Service, 60 New England Avenue, Piscataway, NJ 08854, telephone 1–800–521–2673. Copies may be inspected during normal business hours at RUS, room 2838-S, U.S. Department of Agriculture, Washington, DC 20250 or at the Office of the Federal Register, 800 North Capitol Street, NW., suite 700, Washington, DC.

(6) Bellcore TR-TSY-000508, Automatic Message Accounting, July 1987, is incorporated by reference by RUS. This incorporation by reference was approved by the Director of the Federal Register in accordance with 5 U.S.C. 552(a) and 1 CFR part 51. Copies may be obtained from Bellcore Customer Service, 60 New England Avenue, Piscataway, NJ 08854, telephone 1–800–521–2673. Copies may be inspected during normal business hours at RUS, room 2838-S, U.S. Department of Agriculture, Washington, DC 20250 or at the Office of the Federal Register, 800 North Capitol Street, NW., suite 700, Washington, DC.

(7) Federal Standard H28, Screw-Thread Standards for Federal Services, March 31, 1978, is incorporated by reference by RUS. This includes: Change Notice 1, Federal Standard, Screw-Thread Standards for Federal Services, May 28, 1986; Change Notice 2, Federal Standard, Screw-Thread Standards for Federal Services, January 20, 1989; and Change Notice 3, Federal Standard, Screw-Thread Standards for Federal Services, March 12, 1990. This incorporation by reference was approved by the Director of the Federal Register in accordance with 5 U.S.C. 552(a) and 1 CFR part 51. Copies may be obtained from the General Services Administration, Specification Section, 490 East L'Enfant Plaza SW, Washington, DC 20407, telephone 202–755–0325. Copies may be inspected during normal business hours at RUS, room 2838-S, U.S. Department of Agriculture, Washington, DC 20250 or at the Office of the Federal Register, 800 North Capitol Street, NW., suite 700, Washington, DC.

(8) Institute of Electrical and Electronics Engineers (IEEE) Std 455–1985, IEEE Standard Test Procedure for Measuring Longitudinal Balance of Telephone Equipment Operating in the Voice Band, is incorporated by reference by RUS. This incorporation by reference was approved by the Director of the Federal Register in accordance with 5 U.S.C. 552(a) and 1 CFR part 51. Copies may be obtained from IEEE Service Center, 445 Hoes Lane, P. O. Box 1331, Piscataway, NJ 08854, telephone (201) 981–0060. Copies may be inspected during normal business hours at RUS, room 2838-S, U.S. Department

of Agriculture, Washington, DC 20250 or at the Office of the Federal Register, 800 North Capitol Street, NW., suite 700, Washington, DC.

(9) Institute of Electrical and Electronics Engineers (IEEE) Std 730–1989, IEEE Standard for Software Quality Assurance Plans, is incorporated by reference by RUS. This incorporation by reference was approved by the Director of the Federal Register in accordance with 5 U.S.C. 552(a) and 1 CFR part 51. Copies may be obtained from IEEE Service Center, 445 Hoes Lane, P. O. Box 1331, Piscataway, NJ 08854, telephone (201) 981–0060. Copies may be inspected during normal business hours at RUS, room 2838-S, U.S. Department of Agriculture, Washington, DC 20250 or at the Office of the Federal Register, 800 North Capitol Street, NW., suite 700, Washington, DC.

(10) RUS Bulletin 345–50, PE-60, RUS Specification for Trunk Carrier Systems, September 1979, is incorporated by reference by RUS. This incorporation by reference was approved by the Director of the Federal Register in accordance with 5 U.S.C. 552 (a) and 1 CFR part 51. Copies may be obtained from the Rural Utilities Service, Administrative Services Division, room 0175-S, Washington, DC 20250. The bulletin may be inspected at the Office of the Federal Register, 800 North Capitol Street, NW., suite 700, Washington, DC.

(11) RUS Bulletin 345–55, PE-61, Central Office Loop Extenders and Loop Extender Voice Frequency Repeater Combinations, December 1973, is incorporated by reference by RUS. This incorporation by reference was approved by the Director of the Federal Register in accordance with 5 U.S.C. 552 (a) and 1 CFR part 51. Copies may be obtained from the Rural Utilities Service, Administrative Services Division, room 0175-S, Washington, DC 20250. The bulletin may be inspected at the Office of the Federal Register, 800 North Capitol Street, NW., suite 700, Washington, DC.

(12) RUS Bulletin 345–87, PE-87, RUS Specification for Terminating (TIP) Cable, December 1983, is incorporated by reference RUS. This incorporation by reference was approved by the Director of the Federal Register in accordance with 5 U.S.C. 552 (a) and 1 CFR part 51. Copies may be obtained from the Rural Utilities Service, Administrative Services Division, room 0175-S, Washington, DC 20250. The bulletin may be inspected at the Office of the Federal Register, 800 North Capitol Street, NW., suite 700, Washington, DC.

(b) *Reliability*. (1) Quality control and burn-in procedures shall be sufficient so the failure rate of printed circuit boards does not exceed an average of 1.0 percent per month of all equipped cards in the central office during the first three months after cutover, and an average of 0.5 percent per month of all equipped cards in the central office during any 6-month period thereafter. A failure is considered to be the failure of a component on the PC board which requires it to be repaired or replaced.

(2) The central office switching system shall be designed such that the expected individual line downtime does not exceed 30 minutes per year. This is the interval that the customer is out of service as a result of all failure types, excluding dispatch and travel time, i.e., hardware, software, and procedural errors.

(3) The central office switching system shall be designed such that there will be no more than 1 hour of total outages in 20 years, excluding dispatch and travel time for unattended offices.

(c) *System type acceptance tests.* (1) System type acceptance tests (general acceptance tests) are performed for the purpose of determining whether or not a type of switching system should be added or retained as an RUS accepted system. While general acceptance tests will be required on each system type, they will not be expected to cover every requirement in this section. However, any installation of a system provided in accordance with this section shall be capable of meeting any requirement in this section on a spot-check basis.

(2) A ''completed call'' test shall be made part of these system type acceptance tests. There shall be no more than two in 10,000 locally originating and incoming calls misdirected, unsuccessfully terminated, prematurely disconnected or otherwise failing as a result of equipment malfunction and/or equipment failures, or as a result of transients, noise or design deficiencies. This test shall be made with a load box

with no less than 10 lines access and 10 subscriber numbers for completion, or equivalent, with no other traffic in the system. If there is a failure in the equipment during this test, the cause shall be repaired and the test restarted at zero calls.

(3) System type acceptance testing applies basically to factory type testing, and not to owner acceptance testing for individual installations. The overall installed and operating system shall also meet these requirements, except for unusual circumstances or where specifically excluded by this or other RUS requirements.

(d) *Types of requirements.* (1) Unless otherwise indicated, the requirements listed in this section are fixed requirements.

(2) Optional requirements are those which may not be needed for every office and are identifiable by a phrase such as, ''when specified by the owner,'' or, ''as specified by the owner.''

(3) In some cases where an optional feature specified in paragraph (e) of this section will not be required by an owner, either now or in the future, a system which does not provide this feature will be considered to be in compliance with this section for the specific installation under consideration, but not in compliance with the entire section.

(4) The owner may request bids from any RUS accepted supplier whose system provides all the features which will be required for a specific installation.

(5) The Application Guide, RUS TE&CM 322, provides information about the economic and service factors involved in all optional features, as well as instructions for the completion of appendices A and B of this section.

(e) *General requirements.* (1) The equipment shall provide for terminating and automatically interconnecting subscriber lines and trunks in response to dial pulses (or pushbutton dialing signals, if specified) without the aid of an operator.

(2) Complete flexibility shall be provided for assigning any subscriber directory number to any central office line equipment by the use of internal programmed memory. Thus, any subscriber line and/or directory number may be moved to another terminal to distribute traffic loads, if the line equipment hardware is compatible with the service provided.

(3) The system shall be arranged to interface with interexchange carrier trunks and networks using single digit or multi-digit access codes. The system shall be equipped to handle at least 20-digit subscriber dialed numbers. All subscriber directory numbers in the office shall be seven-digit numbers.

(4) The network and the control equipment shall be comprised of solid-state and integrated circuitry components. Peripheral equipment shall be comprised of solid-state and integrated circuitry components as far as practical and consistent with the state-of-the-art and economics of the subject system.

(5) The basic switching system shall include the provision of software programming and necessary hardware, including memory, for optional custom calling services such as call waiting, call forwarding, three-way calling, and abbreviated dialing. It shall be possible to provide these services to any individual line (single-party) subscriber. The addition of these services shall not reduce the anticipated ultimate engineered line, trunk, and traffic capacity of the switching system as specified in appendix A of this section.

(6) The requirements in this specification apply only to single party lines. Although only single frequency ringing is required, other types may be requested in appendix A of this section.

(7) Provision shall be made for local automatic message accounting (LAMA), and for traffic service position system (TSPS) trunks, or equivalent, to the operator's office when required either initially or in the future.

(8) Tandem switching features shall be provided if specified in appendix A of this section.

(9) The system shall be arranged to serve a minimum of eight All Number Calling (ANC) office codes per office, with discrimination on terminating calls by trunk group, numbering plan, or programmed memory and class mark, if specified in appendix A of this section.

(10) Busy hour load handling capacity is an important feature when an office approaches capacity. The delays which may occur in call completion during busy hour periods may prove to be excessive in some system designs. Accordingly, each bidder shall provide, in appendix C of this section, data satisfactory to RUS regarding the busy hour load handling capacity and traffic delays of the system.

(11) Provision shall be made for hotel-motel arrangements, as required by the owner, to permit the operation of message registers at the subscriber's premises to record local outdial calls by guests (see Item 10.5, appendix A of this section).

(12) Provision shall be made to identify the calling line or incoming trunk on nuisance calls (see paragraph (g)(10) of this section for details).

(13) Full access from every subscriber line to every interoffice trunk shall be provided.

(14) Facilities shall be provided to implement service orders, make traffic studies, and perform switching and transmission tests by means of remote control devices if such operations are specified in Items 11.2 and 11.3 of appendix A of this section.

(15) Provision shall be made for the addition of facilities to record all subscriber originated calls based on dialed directory number, time of day, and duration of conversation. They shall be such that the additional equipment (if any is required) may be added to an in-service system without interruption of service and a minimum of equipment, wiring and software modifications.

(16) The system shall be capable of distributed switching operation where groups of subscriber lines can be remotely located from the central office. The remotely situated units are known as ''Remote Switching Terminals'' (RST's) (see paragraph (w) of this section). This does not eliminate the use of pair gain devices such as direct digitally connected concentrators, regular concentrators or subscriber carrier equipment, where specifically ordered by the owner and its engineer.

(17) The switching system shall have means to synchronize its clock with switches above it in the network hierarchy, when specified by the owner in item 3, appendix A of this section (see paragraph (j) of this section).

(18) Consistent with system arrangements and ease of maintenance, space shall be provided on the floor plan for an orderly layout of future equipment bays that will be required for anticipated traffic when the office reaches its ultimate size. Readily accessible terminals shall be provided for connection to interbay and frame cables to future bays. All cables, interbay and intrabay (excluding power), if technically feasible, shall be terminated at both ends by use of connectors.

(19) When specified in appendix A of this section, the system shall be capable of processing emergency calls to a 911 service bureau connected either by a group of one-way 911 lines or a trunk group.

(i) It shall be possible to reach the service bureau by dialing 911, 1+911, or a 7-digit number.

(ii) The system shall select an idle 911 line or trunk.

(iii) The system shall provide usual ringing and ringback signal until the called 911 line answers.

(iv) If the calling line goes on-hook first, the system shall hold the connection from the called 911 line and return steady low tone to the service bureau. The system shall then begin a 45-minute timeout, after which the calling line is disconnected and an alarm message is printed on a TTY. If the calling line goes off-hook before timeout, the system shall reestablish the conversation path.

(v) If the calling line does not disconnect, the service bureau attendant shall have the ability to force a disconnect of the established connection with the calling party.

(vi) When the 911 call is answered, the equipment shall be arranged so that coin lines are not charged for the call. Similarly, if some form of local call charging is used, there shall be no charge for the 911 call.

(vii) If the 911 service bureau is holding a calling line, it shall be possible for the 911 line to cause the equipment to ring back the calling line. This is done by providing a flash of on-hook signal from the 911 line lasting from 200 to 1,100 milliseconds. The signal to the calling line shall be ringing current if

the line is on-hook, or receiver off-hook (ROH) tone if the line is off-hook.

(viii) Calls shall not be originated from the service bureau via the dedicated 911 lines. If an attempt is made to originate a call, it shall receive reorder tone. After 6 minutes, the system shall print an alarm message.

(ix) If 911 calls pass through intermediate switching, the forced-hold control, emergency ringback, and calling line status monitoring capabilities are lost.

(f) *Line circuit requirements*—(1) *General.* (i) The range of direct current (dc) resistances of subscriber loops, measured from the main frame in the central office and including the telephone set shall be at least 0–1900 ohms without loop extension and 1900–3600 ohms with loop extenders, or equivalent. The range when using extension equipment may be significantly reduced for straight line ringers. These limits apply under maximum adverse environmental and manufacturing variation tolerance conditions. Central office voltage shall be stabilized at a value necessary to provide at least a nominal 21 milliamperes current with a nontreated loop of at least 1900 ohms. Minimum loop insulation resistance without loop extenders shall be 25,000 ohms between conductors or from either conductor or both conductors in parallel to ground. Loop insulation resistance for loop extension devices may be 100,000 ohms minimum between conductors or from either conductor or both conductors in parallel to ground.

(ii) In addition to operating on nonloaded cable pairs and subscriber carrier, the equipment shall function properly with D-66 and H-88 loaded cable pairs, including any provisions the equipment must control for the purposes of proper transmission.

(2) *Dialing*—(i) *Subscriber dial speed.* The line equipment and central office equipment (COE) in tandem shall operate satisfactorily when used with subscriber dials having a speed of operation between eight and twelve impulses per second and a break period of 55 to 65 percent of the total impulse period.

(ii) *Subscriber dial interdigital time.* The line equipment and central office equipment shall operate satisfactorily with subscriber rotary dial interdigital times of 200 milliseconds minimum, and with pushbutton dialing interdigital times of 50 milliseconds minimum.

(iii) *Subscriber line pushbutton dialing frequencies.* (A) The frequency pairs assigned for pushbutton dialing shall be as follows, with an allowable variation of ± 1.5 percent:

Low Group Frequencies (Hz)	High Group Frequencies (Hz)			
	1209	1336	1477	1633
697	1	2	3	Spare
770	4	5	6	Spare
852	7	8	9	Spare
941	*	0	#	Spare

(B) The receiver shall comply with the operating parameters of the dual-tone multifrequency (DTMF) central office receiver as described in section 6 of Bell Communications Research (Bellcore) document SR-TSV-002275, BOC Notes on the LEC Networks—1990.

(3) *Impedance.* For the purpose of this section, the input impedance of all subscriber loops served by the equipment is arbitrarily considered to be 900 ohms at voice frequencies.

(4) *Lockout.* (i) All line circuits shall be arranged for line lockout. When a permanent condition occurs prior to placing a line into lockout, a timed low level warning followed by a timed high level receiver off-hook (ROH) tone (see paragraph (i)(2)(xi) of this section) or a howler circuit (see paragraph (o)(2)(iii)(C) of this section) shall be applied to the line.

(ii) The line on lockout shall be reconnected automatically to the central office when the permanent off-hook condition is cleared.

(5) *Pay stations.* Pay stations may be prepay, or semi-postpay, as specified by the owner.

(6) *Loop extension.* (i) The number of lines which exceed 1900 ohms will be specified by the owner. When requested by the owner, the bidder shall furnish equipment to guarantee satisfactory operation of all lines.

(ii) Working limits for subscriber lines with loop extenders are covered in RUS Bulletin 345–55, PE-61, Central Office Loop Extenders and Loop Extender Voice Frequency Repeater Combinations.

(iii) Ringing from RUS accepted loop extenders, or their equivalent, shall be

cut off from the called line when the handset at the called station is removed during the ringing or the silent interval.

(7) *Private branch exchange (PBX) lines.* PBX trunk hunting shall be available. It will not be necessary to segregate PBX lines to certain line groups.

(8) *Quantity.* A sufficient number of terminations shall be provided, in addition to the quantity specified by the owner for subscriber line service, to meet the requirements of the system for equipment testing, alarm checking, tone transfer, loop around test and other features.

(9) *Types.* There shall be provisions for types of lines such as ground start, loop start, regular subscriber, pay stations, etc.

(g) *Intraoffice switching requirements.* (1) The switching system shall:

(i) Provide dial tone in response to origination of a call by a subscriber, except on special lines where the application of dial tone is not applicable, such as manual and hot lines;

(ii) Remove dial tone immediately after the first digit has been dialed;

(iii) Recognize the class of service of the calling subscriber;

(iv) Register the digits dialed by the calling subscriber where the rotary dial or pushbutton dialing characteristics and the minimum interdigital times are as specified;

(v) Perform the necessary translation functions when the required number of digits have been registered, and select a channel to a proper outgoing trunk, if one is available, to the designated interexchange carrier;

(vi) Provide a transmission path from the calling subscriber line to the selected trunk, if an idle one is found;

(vii) Provide for more than one alternate route to the desired destination when specified by the owner, select an idle outgoing trunk in the first or second choice alternate route trunk group, if all trunks in the higher choice groups are busy, and provide a reorder signal (see paragraph (i)(2)(iv) of this section) to the subscriber if no trunks are available in the last choice alternate route;

(viii) Translate the proper part of the registered incoming routing data on tandem calls into an identification of an outgoing trunk group, select an idle trunk in that group, initiate the connection of the incoming trunk to the outgoing trunk, set the trunks in the proper configuration for tandem operation, and transmit information as required to permit completion to the desired destination in the distant office;

(ix) Transmit the proper stored information over the selected trunk to permit completion of outgoing calls to the desired destination by the distant office or offices, and provide multifrequency (MF) outpulsing when specified;

(x) Register all the digital information on calls incoming from a distant office, when dial or MF pulsing characteristics and interdigital times are as specified;

(xi) Translate internally a registered directory number into line equipment location, ringing code and terminating class (such as ''PBX hunting'') on incoming or intraoffice calls;

(xii) Test the called line for a busy condition;

(xiii) Connect the incoming trunk or locally originated call to the called line if the called line is idle;

(xiv) Permit any type of ringing voltage available in the central office to be associated with any Subscriber Directory Number (SDN), cause the proper type of ringing voltage to be connected to the called line, and remove ringing from the line upon answer whether in the ringing or silent period; and

(xv) Test and monitor the switching system continually during periods of low traffic using the maintenance and diagnostic subsystem.

(2) The switching system shall offer at least the following originating and terminating class-of-service indications on a per-line basis to subscribers, as specified by the owner:

(i) Flat rate individual line, bridged ringing;

(ii) Flat rate PBX and trunk hunting numbers, bridged ringing;

(iii) Pay station;

(iv) Message rate subscriber line;

(v) Wide Area Telephone Service (WATS);

(vi) Extended Area Service (EAS);

(vii) Data service;

(viii) Hotel-Motel capability;

(ix) Denied originating;

(x) Denied terminating;

(xi) Custom calling features;

(xii) Special interexchange carrier accesses; and

(xiii) Presubscription to designated interexchange carrier.

(3) The switching system shall provide PBX hunting.

(i) At least one trunk hunting group in each 100 SDN's equipped shall be provided. More may be provided as specified by the owner.

(ii) PBX groups shall be of a reasonable size commensurate with the ultimate size of the switching system.

(iii) Any available SDN may be used for PBX trunk hunting.

(iv) Each PBX group shall have the capability of being assigned one or more nonhunting SDN's for night service.

(v) If the called line is a PBX hunting line, the switching system shall test all assigned lines in the hunting group for a busy condition.

(vi) If the called PBX group is busy, line busy tone, as specified in paragraph (i)(2)(iii) of this section, shall be returned to the originating end of the connection.

(4) The switching system shall provide pay stations which may be prepay or semi-postpay. The system shall be arranged so that an operator and emergency service (911) may be reached from prepay or semi-postpay coin lines without the use of a coin, when the proper pay station equipment is provided.

(5) To meet dialing requirements, the switching system shall:

(i) Initiate the line lockout function after a delay, as specified in paragraph (r)(3) of this section, if dial or pushbutton dialing pulses are not received after initiation of a call, preferably routing the subscriber line to a holding circuit for tones and then automatically to lockout;

(ii) Connect 120 interruptions per minute (IPM) paths busy tone, recorded message, or other distinctive tone to the calling subscriber if an interval longer than that specified in paragraph (r)(4) of this section elapses between dialed digits;

(iii) Register the standard tone calling signals received from a subscriber station arranged for pushbutton dialing if specified by the owner, provide arrangements to function properly with 12-button pushbutton dialing sets, and return a reorder signal to the subscriber upon receipt of signal from the 11th or 12th buttons if neither of these buttons is assigned functions; and

(iv) Connect the incoming trunk to the digit register equipment within 120 milliseconds after seizure where direct dialing is received on calls from a distant office, cancel the bid for a register, and return reorder tone to the calling end if dial pulses are received before a register is attached.

(6) The switching system shall provide for appropriate circuit usage.

(i) To avoid inefficient utilization of the switching network, that portion of the common equipment that establishes the connection on intramachine calls shall not require more than 500 milliseconds, exclusive of ringing and ring trip, to complete its function under no-delay conditions.

(ii) The switching system shall provide for duplication in a load sharing or redundant configuration any circuit elements or components, the failure of which would reduce the grade of service of 100 or more lines by more than 25 percent of the traffic carrying capacity.

(iii) The switching system shall ensure that failure of access to a high choice circuit will not prevent subsequent calls from being served by lower choice circuits, wherever possible.

(iv) Where only two circuits of a type are provided, circuits shall be designed so that failure of one circuit will not permanently block any portion of the system for the duration of the failure.

(v) Where more than two circuits of a type are provided, successive usages should be on a rotational or random basis rather than the step-up selection with the possible exception of a last choice trunk.

(vi) The system shall be designed so that, in the event of a network failure, the system shall immediately or simultaneously use a redundant portion of the network to complete the call.

(7) The switching system shall provide busy verification facilities with the method of access specified by the owner.

(i) Only an operator or a switchman shall be able to override a busy line condition.

(ii) If the called line is busy, off-hook supervision shall be given the operator or switchman.

(iii) The responsibility of restricting subscribers in distant offices from having access to busy verification shall be on the distant office personnel when the toll trunks are used for both toll connecting and verification traffic.

(iv) When a verification code is used, all digits of the code must be dialed before cut-through to the called line can be accomplished.

(8) The switching system shall provide intercept facilities.

(i) All unused numbering plan area codes, home numbering plan area office codes, service codes and subscriber directory numbers (SDN's) shall be routed to intercept. All intercept administration shall be by changes in memory administrable by telephone company personnel. Maximum machine time to place a subscriber on intercept shall be 15 seconds.

(ii) Unequipped SDN's intercept shall be effective if the processor memory does not have information concerning the SDN in question.

(iii) The intercept equipment shall be arranged so that specific SDN's can be routed to a separate intercept circuit for changed numbers.

(iv) When an intercept call is answered, either by an operator or by a recorded announcement, an off-hook or charge supervision signal shall not be returned, even momentarily, to the originating end.

(v) When intercepting service is to be handled over the regular interoffice toll trunks, a distinctive identifying tone shall be transmitted when the operator answers. This tone shall be of the frequency and duration specified in paragraph (i)(2)(x) of this section.

(9) The switching system shall provide nuisance call trap facilities which, when activated, provide a permanent record of the calling and called numbers complete with date and time of day. Where the call originates over an interoffice trunk, the actual trunk number shall be recorded. There shall be provision for the called subscriber to hold the connection and for the positive trace of the call from origination to termination within the office.

(10) The switching system shall follow appropriate release procedures.

(i) The office shall be arranged so a connection to a terminating channel other than assistance operator shall be released under control of the calling party so that the channel can be reseized, unless the call is to emergency 911 service or other termination arranged for called party control.

(ii) If the called party disconnects first, the channel used in the originally established connection shall be held until the calling party disconnects or until the timing interval specified in paragraph (r)(7) of this section has elapsed. This feature shall not interfere with the normal operation of calls to intercept, fire alarm, or other special services.

(11) The switching system shall provide line load control facilities, when specified by the owner, to give preference for originating service to a limited group of subscribers during emergencies.

(i) These facilities may be activated manually by input-output (I/O) device or automatically after a manual setting of a key (or equivalent) to put line load control into effect, as determined by the bidder. The automatic procedure is preferable.

(ii) Procedures shall be established to avoid the unauthorized use of the line load control facilities.

(iii) Where automatic activation is provided, service may be provided to small groups of nonemergency subscribers on limited grade of service whenever the office load becomes low enough to permit this to be done safely.

(h) *Interoffice trunk circuit requirements*—(1) *General.* (i) The bidder shall supply, as requested by the owner, solid-state technology type trunk and signaling circuits of any of the types described in RUS TE&CM 319, Interoffice Trunking and Signaling, or, with the approval of RUS, any other more recent and desirable types not as yet covered in the manual. For dc signaling, the duplex (DX) and loop types of signaling are preferred.

(ii) Trunks shall not be directly driven from the subscriber's dial on outward calls.

(iii) In order to reduce the spares inventory and minimize incidence of improper maintenance replacement of circuit assemblies, the types of trunk circuits shall be kept to a minimum. Variation in assemblies should be mainly limited to variation in signaling modes.

(iv) Trunk circuits which connect with carrier or 4-wire transmission facilities shall be arranged for 4-wire transmission to avoid an intermediate 2-wire interface between a 4-wire switching system and trunk facilities.

(2) *Quantity.* Trunk quantities shall be as specified in appendix A of this section. Sufficient space shall be provided for an orderly layout of trunks. Trunks of a certain type going to the same destination may be grouped together on the original installation.

(3) *Requirements for interoffice connections.* (i) When operator trunks are used in common for both coin and noncoin lines, they shall be arranged to provide an indication to the operator by means of a visual signal or tone when calls are from pay stations. When a tone is used, it shall be of the type specified in paragraph (i)(2)(v) of this section and shall be connected to be heard only by the operator upon answer. It shall be possible to repeat the tone signal.

(ii) There are no requirements for trunks arranged for manual re-ring by a toll operator, either with the receiver on or off the hook, except to coin stations with the receiver on the hook.

(iii) On calls from subscribers to the assistance operator, the release of the connection shall be under control of the last party to disconnect. An exception is operator control of disconnect that is used on outgoing trunks to a TSP/TSPS system.

(iv) On calls originated by an operator, the release of the connection shall be under control of the operator.

(v) Where trunks with E and M lead signaling are used, the trunk circuits for Type I signaling shall be arranged to place ground on the M lead during the on-hook condition and battery on the M lead in the off-hook condition. For E and M Type II, only a make contact between the MA and MB lead will be required. In either type, current limiting shall be provided in the E lead of the trunk circuit itself, as required for proper operation. It shall be assumed that connection equipment in the form of trunk carrier, multiplex, or associated signaling apparatus furnishes only a contact closure to ground (Type I) or to a signal ground lead (Type II) for an off-hook condition on the E lead.

(vi) Where answer supervision is used to determine the initiation of the charging interval for a call, such answer supervision shall not be effective for charging until after the elapse of the timing interval listed in paragraph (r)(5) of this section.

(vii) When necessary, provision shall be made for reception of start and stop dial signals on toll trunk equipment.

(viii) When trunks arranged for automatic message accounting (AMA), toll ticketing, or centralized automatic message accounting (CAMA) are specified by the owner, these trunks shall provide the pertinent features described in paragraph (k) of this section applicable to such functions.

(4) *Requirements for direct digital connections.* (i) Interface units which will permit direct digital connection to other digital switches, channel banks and remote line and/or trunk circuits over digital facilities shall be provided when specified by the owner. The digital transmission system shall be compatible with T1 type span lines using a DS1 interface and other digital interfaces that may be specified by the owner. The RUS specification for the span line equipment is Bulletin 345–50, PE-60, RUS Specification for Trunk Carrier Systems.

(ii) Each interface circuit shall connect 24 voice channels to the switching system from a 1.544 megabit per second DS1 bit stream. The DS1 bit stream entering or exiting the system shall be in the D3 format and the voice signals shall be encoded in 8 bit mu-255 PCM. The format and processing of the bit stream must be compatible with characteristics of the D3 channel bank such as alarm and maintenance characteristics. Loss of receive signal (DS1) shall be detected and the equivalent of a carrier group alarm shall be executed in

2.5 ± 0.5 seconds. Loss of synchronization shall be detected by slips, timing jitter, and wander in accordance with industry standards.

(iii) Signaling shall be by means of MF or dial pulse (DP) and the system which is inherent in the A and B bits of the D3 format. In the case where they are not used for signaling, the A and B bits shall be used only for normal voice and data transmission.

(i) *Tone requirements*—(1) *General.* Tones shall be provided to indicate the progress of a call through the office. Tone generators should be an integral part of the switching systems. The tones should be introduced digitally by the application of the appropriate bit stream to the line or trunk circuit via the digital switching network. The necessary precautions shall be made to ensure tone sources automatically if the primary sources fail.

(2) *Tone specifications.* (i) Dial tone shall consist of 350 Hz plus 440 Hz at a composite level of −10 dBm0 which equates to −13 dBm0 per frequency. This is the precise tone suitable for use with pushbutton dialing.

(ii) Low tone shall consist of 480 Hz plus 620 Hz at a composite level of −21 dBm0 which equates to −24 dBm0 per frequency.

(iii) Line busy tone shall be low tone interrupted at 60 IPM, with tone on 0.5 seconds and off 0.5 seconds.

(iv) Reorder, all paths busy, and no circuit tone shall be low tone interrupted at 120 IPM, with tone on 0.25 seconds and off 0.25 seconds.

(v) Identifying tone on calls from coin lines shall be uninterrupted low tone.

(vi) High tone shall consist of 480 Hz at −17 dBm0.

(vii) Audible ringback tone shall consist of 440 plus 480 Hz at a composite level of −16 dBm0 which equates to −19 dBm0 per frequency.

(viii) The call progress tones listed in this section are described in Bellcore document SR-TSV-002275, BOC Notes on the LEC Networks—1990, section 6. The 350, 440, 480, and 620 Hz tones shall be held at ± 0.5 percent frequency tolerance and ± 3 dB amplitude variation. The amplitude levels specified are to be measured at the main distributing frame, excluding cable loss.

(ix) Distinctive tone, when required for alarm calls, or other features, shall consist of high tone interrupted at 200 IPM with tone on 150 ms and off 150 ms.

(x) Identifying tone on intercepted calls shall consist of uninterrupted high tone impressed on the trunk circuit 300 to 600 milliseconds following the operator's answer of intercepted calls.

(xi) An ROH circuit shall have output tones which do not interfere with the pushbutton or multifrequency signaling tones. The ROH tone may be introduced digitally internal to the system near the overload level of +3 dBm0. No power adjustment will be required. The frequency of the output shall be distinctive and urgent in order to attract the subscriber's attention to an off-hook situation. (Warning: In order to determine the signal level, a frequency selective voltmeter must be used to determine the level of each signal component and mathematical power addition used to combine these measurements into a single level value.)

(xii) During application of tones, office longitudinal balance shall be maintained within 15 dB of that specified in paragraph (q)(8) of this section.

(j) *System clock.* (1) The central office clock and network synchronization system shall have the ability to be synchronized with external clocks for network synchronization, including detection of slips, timing, jitter and wander, in a digital-to-digital environment or operate initially in an independent network (refer to Bellcore document SR-TSV-002275, BOC Notes on the LEC Networks—1990, section 11).

(2) The end office central office system clock shall be a Stratum 3 clock with:

(i) A minimum long-term accuracy of $\pm 4.6 \times 10^{-6}$ (±7 Hz @ 1.544 MHz);

(ii) A minimum stability of 3.7×10^{-7} day upon loss of all frequency references; and

(iii) A ''Pull-In Range'' for the capability of synchronizing to a clock with accuracy of $\pm 4.6 \times 10^{-6}$.

(3) The access tandem central office system clock shall be a Stratum 2 clock with:

(i) A minimum long-term accuracy of $\pm 1.6 \times 10^{-8}$ (±0.025 Hz @ 1.544 MHz);

(ii) A minimum stability of 1×10^{-10} day upon loss of all frequency references; and

(iii) A ''Pull-In Range'' for the capability of synchronization to a clock with accuracy of $\pm 1.6 \times 10^{-8}$.

(k) *Switched access service arrangements*—(1) *General.* The equipment shall be capable of providing Feature Group A, Feature Group B, Feature Group C, and Feature Group D switched access service arrangements, as described in Bellcore document SR-TSV-002275, BOC Notes on the LEC Networks—1990, section 6 and section 15, including arrangements for automatic number identification (ANI).

(2) *Operation.* (i) All equipment shall be arranged for Feature Group A (Line Side Connection).

(ii) All equipment shall be arranged for Feature Group B given that appendix A of this section requires the equipment of the necessary trunks (Trunk Side Connection).

(iii) The equipment shall be arranged for Feature Group C on the trunk groups specified in appendix A of this section. Even though appendix A of this section specifies Feature Group D or some other trunk group, it shall be possible through software commands available to the owner to use Feature Group C signaling protocols on a trunk group basis until such time that the trunk group in question converts to Feature Group D signaling protocols.

(iv) The equipment shall be arranged for Feature Group D on the trunk groups specified in appendix A of this section.

(v) Calls originating from coin lines toward switched access service shall be arranged either to provide signaling protocols for TSPS, or in the absence of TSPS-type service, such calls shall be blocked.

(vi) The equipment shall be arranged for forwarding routing information, calling party identification, and called party numbers in the proper feature group protocols, by trunk group as specified in appendix A of this section.

(vii) The equipment shall be arranged for AMA data collection as specified in appendix A of this section by trunk group. Unless otherwise specified by the owner, the equipment shall be arranged to collect the billing data in the Bellcore AMA format as described in Bellcore document TR-TSY-000508, Automatic Message Accounting.

(viii) If specified in Item 9.4, appendix A of this section, the equipment shall be arranged to store the billing data in a pollable system. If specified in Item 9.5, appendix A of this section, equipment shall be furnished to poll the pollable systems associated with the contract.

(l) *Fusing and protection requirements*—(1) *General.* (i) The equipment shall be completely wired and equipped with fuses, trouble signals, and arranged for printout of fault conditions, with all associated equipment for the wired capacity of the frames or cabinets provided.

(ii) Design precautions shall be taken to prevent the possibility of equipment damage arising from the insertion of an electronic package into the wrong connector, the removal of a package from any connector, or the improper insertion of the correct card in its connector.

(2) *Fuses.* Fuses and circuit breakers shall be of an alarm and indicator type, except where the fuses or breaker location is indicated on the alarm printout. Their rating shall be designated by numerals or color code on the fuse panel, where feasible.

(3) *Components.* (i) Insofar as possible, all components shall be capable of being continuously energized at rated voltage without injurious results. Insofar as possible, design precautions shall be taken to prevent damage to other equipment and components when a particular component fails.

(ii) Printed circuit boards or similar equipment employing electronic components shall be self-protecting against external grounds applied to the connector terminals, where feasible. Board components and coatings applied to finished products shall be of such material or treated so they will not support combustion.

(iii) Every precaution shall be taken to protect electrostatically sensitive components from damage during handling. This shall include written instructions and recommendations (see Item 6.1,h of appendix C of this section).

(m) *Switching network requirements*—(1) *The network.* (i) All networks shall be comprised of solid-state components.

(ii) The switching network shall employ time division digital switching and be compatible for connection to D3 type PCM channel banks without conversion to analog.

(iii) Equipment shall be available as required to connect analog lines and trunks, analog or digital service circuits, digital carriers to RST's, D3 channel banks or other digital switching units.

(2) *Network quantity.* Where the number of stages in the switching network and their control varies with the capacity of the system, sufficient equipment and wiring shall be supplied initially in order that there will be no service interruptions when additions are made up to the ultimate capacity as specified in appendix A of this section. This does not imply the necessity of supplying empty cabinets unless this is the only way the necessary wiring can be accomplished.

(n) *Stored program control (SPC) equipment requirements.* (1) The system shall provide redundancy in call processing such that the failure of a call processing unit does not degrade the call processing capabilities of the switching system nor result in the loss of established calls.

(2) Programs shall be modular, flexible and structured. In the interest of more dependable and more easily read programs, it is desirable to use a language which is more person-oriented leaving the detailed machine-oriented problems to a compiler program. Quality assurance of all software programs shall be in accordance with IEEE Std 730–1989, IEEE Standard for Software Quality Assurance Plans, or equivalent.

(3) The office administration program shall have checks within it to prevent failure due to erroneous or inconsistent input data. It shall safeguard against the possibility of upsetting machine performance with improper instructions or information. In addition, modular structure shall allow the use of a variety of human-engineered service order formats. Service changes may be performed remotely if so desired. Average machine time for service change shall be 15 seconds or less. Service changes shall not be registered in permanent memory until verified. The access to the service change shall not have access to generic program.

(4) The switching system shall be able to offer, by request, at least the following printouts of its routine stored data for administrative purposes:

(i) A list of all assigned directory numbers, in numerical order, with their assigned class of service and line terminal numbers;

(ii) A list of all directory numbers, in numerical order, associated with a class of service;

(iii) A list of all unassigned line terminals;

(iv) Traffic data in proper form for separation studies in accordance with the revenue separations procedures current at the time of the contract;

(v) All lines on lockout;

(vi) All lines assigned to intercept;

(vii) All available (unassigned) directory numbers in the working thousands group; and

(viii) A list of equipment busied out for maintenance.

(5) The printouts in paragraph (n)(4) of this section may be delayed to times of light traffic.

(6) Maintenance diagnostics shall be performed by a fault recognition system utilizing both software and hardware, each being used where they are most effective for maintenance and reliability. In the economic interests of providing early and efficient fault detection and accurate pinpointing of faulty areas, it is desirable to have a comprehensive person-machine interface supported by extensive automatic fault detection and analysis, involving diagnostic software for fault resolution and automatic recovery mechanisms to maintain continuous service. Maintenance messages may be channeled to a remote maintenance center if so desired.

(7) Information in memory, having no requirement for changes to be introduced in the maintenance or operation of the system, may be stored in memory devices such as programmable

read-only memory (PROM) or other devices that cannot be reprogrammed in the field.

(o) *Maintenance facilities*—(1) *Alarm features, including alarm sending.* (i) The equipment shall be arranged to provide audible and visual alarms indicating fuse operation or other circuit malfunctions resulting from component failure, crosses or open wiring, or any other conditions affecting service which can be detected economically.

(ii) The alarms shall be classified in accordance with their effect on the system.

(A) Catastrophic alarms demand immediate attention and require notification of the highest level of supervisory personnel. Conditions such as loss of service, loss of one or more remote line switches or line concentrators connected through Direct Digital Interface, loss of network control, and loss of computer program in all processors shall produce catastrophic alarms.

(B) Major alarms demand rapid action. Conditions such as loss of one or more groups of subscribers or trunk ports, blown fuses for common groups of channels, loss of control to groups of channels, failure of one or both redundant units, and total loss of battery charging current for more than 15 minutes shall produce major alarms.

(C) Minor alarms indicate nonemergency conditions which cause degraded service or fault conditions which causes the system to operate within less-than-optimum performance. Conditions discovered in automatic routining which have not shown in the operation of the equipment but require attention and cumulative line lockout (level adjustable) are examples of minor alarm conditions.

(iii) When the office is arranged for unattended operation, facilities shall be provided for extending the alarm indications to an attended point.

(iv) When the use of a separate outside plant facility for alarm sending is specified, the nature of the alarm may be indicated to the distant point by machine printout or other display device.

(v) When alarm sending is accomplished over a regular operator office trunk, the operator shall be apprised that the call is an alarm indication by a distinctive tone, as specified by the owner in appendix A of this section. It shall be possible for the operator to determine at any time the presence of a trouble condition by dialing a number set aside for that purpose. This number shall also be accessible from lines classmarked for this feature.

(vi) When the alarm sending circuit seizes an interoffice operator trunk, the operator must dial the alarm checking code over another trunk before the first trunk can be released except where the alarm condition has disappeared first.

(vii) The alarm sending circuit shall have access to two or more trunks if the trunks are used for subscriber traffic.

(viii) An alarm indication of higher priority shall supersede an original alarm indication and reseize an interoffice operator trunk.

(ix) In any group of offices purchased under one contract, the same codes shall be used in each office for alarm checking and test.

(x) When the alarm checking number is dialed, the alarm indications received shall be as follows:

(A) Catastrophic alarm—No tone.

(B) Major alarm—Continuous busy tone 60 IPM, unless alarm is overridden.

(C) Minor alarm—Continuous 1-ring code ringback tone, unless alarm is overridden.

(D) No trouble—Continuous 2-ring code ringback tone, unless alarm is overridden.

(xi) Audible and visual local alarms and transmitted alarms shall be provided as follows:

	Delay Interval	
Classification	Local Alarms	Alarms Transmitted
Catastrophic	0	0
Major	0	0[1]
Minor	0	0–30 Min.

[1]Except no charge alarm delayed 15 minutes.

(xii) The central office alarm circuits shall be arranged to provide optional wiring to transmit either a minor alarm or a major alarm and a printout to accommodate various types of trunk and subscriber carrier systems, microwave, mobile radio, other transmission systems, and environmental protection

systems with different priorities when a set of contacts is closed in the equipment of such systems and the alarm checking code is dialed. The alarm relay shall be furnished by the supplier of the carrier multiplex and/or mobile radio equipment. The option or options shall be specified by the owner.

(2) *Trouble location and test.* (i) *Equipment.* (A) A maintenance center shall be provided with a fault recorder (printer and/or display) for troubles. Here, system and sub-system visual trouble indications are shown for maintenance aid.

(B) The fault recorder shall provide a permanent or semi-permanent record of the circuit elements involved whenever a trouble is encountered. It shall be arranged to recognize an existing fault condition and not cause multiple printouts of the same fault, except during test routine.

(ii) *Maintenance system.* (A) The maintenance system shall monitor and maintain the system operation without interruption of call processing, except for major failures.

(B) The maintenance system shall provide both specialized maintenance hardware circuits and an extensive software package to enable maintenance to determine trouble to an individual card or functional group of cards.

(C) Maintenance programs may be both on-line and off-line. On-line maintenance programs are activated by system errors and shall be scheduled to execute call tests during low traffic periods and periodic hardware tests at specific time intervals. Programs shall provide diagnostic tools for the maintenance personnel and be initiated by them.

(D) Scheduled periodic hardware tests shall automatically detect faults and alert maintenance personnel via alarm or appropriate input/output device(s) at local and/or remote locations.

(E) Facilities shall be provided so that test calls can be set up using preselected items of switching equipment.

(F) The maintenance personnel shall be able to make tests to determine if every trunk and every item of switching equipment are functioning properly. Also, it shall be possible to make each trunk and each SPC equipment, or part thereof, busy to service calls. Where possible, equipment which is made busy to service calls shall still be accessible for test calls.

(iii) *Outside plant and subscriber stations.* (A) A subscriber loop test set or equivalent shall be provided either as a separate set or as a part of the maintenance center, as specified in item 11.2 of appendix A of this section. This circuit shall include a high resistance volt-ohm meter, wiring to tip and ring terminals to permit a portable wheatstone bridge to be used, an operator's telephone circuit, a dial circuit (and pushbutton dialing keys, if specified), outgoing trunks to dial equipment for access to lines under test without use of the main distributing frame (MDF) test shoe and the necessary test keys. No dry cell batteries shall be accepted for test potentials. Circuits shall be designed so that alternating current (ac) induction on the line will have no effect on dc measurements. All functions shall be under control of lever or pushbutton keys. As a minimum the test system shall:

(*1*) Test for bridged foreign electromotive force (EMF);

(*2*) Test for regular line battery;

(*3*) Test for booster battery voltage and polarity using the test shoe;

(*4*) Test for open circuits, short, tip ground, and ring ground;

(*5*) Test for tip or ring negative potential;

(*6*) Test for capacitance of a subscriber's line;

(*7*) Supply talking battery to the line with and without booster battery;

(*8*) Ring the subscriber through the test access circuit or through a test shoe;

(*9*) Test in and out of the central office; and

(*10*) Supply a reverse polarity key for voltage readings, except when positive or negative values are displayed directly.

(B) An acceptable arrangement for making the tests shown in paragraph (o)(2)(iii)(A) of this section is to have them under software control with results displayed at one of the system's I/O ports.

(C) A howler circuit for maintenance purposes, if ordered by the owner, shall

have output tones which do not interfere with the pushbutton or multifrequency signaling tones. The harmonics of the output tones shall be attenuated at least 26 dB below the fundamental frequency for all load conditions. The frequency stability shall be 2 percent or less for all output tones when the unit is operated in the specified load and environmental range. It shall be possible to vary the output voltage (power) of the howler circuit. It shall remove tone and restore the line to service when the telephone instrument receiver is placed on-hook. The frequency of the output shall be chosen to be distinctive and urgent in order to attract the subscriber's attention to an off-hook situation.

(D) When a dial speed test facility is specified by the owner, it shall be accessed by dialing a special code and shall return to the calling station readily identifiable signals to indicate that the dial speed is slow, normal, or fast.

(E) When the office is arranged for pushbutton dialing, optional facilities shall be provided for testing the pushbutton dialing equipment at the subscriber station.

(F) When a system for testing subscriber lines in remote offices from a test position in a centrally located office is specified by the owner, it shall be capable of working with all the central offices and RST's in the remote areas. This testing equipment shall preferably be solid-state with a minimum of electromechanical devices and shall operate from central office battery. It shall be capable of working over any voice grade telephone circuit and shall not require a dedicated trunk. There shall be no interference to or from ''in-band'' voice channel tones. When used over a network, the verification or access shall be guarded to prevent unauthorized access by subscribers. Access to this system shall only be available to the test operator in all cases.

(3) *Transmission testing.* (i) When transmission test circuits are specified in Item 11.3 of appendix A of this section, they shall permit testing of trunks by a distant office without any assistance in the local dial office. Analog test ports shall meet appropriate trunk requirements. If Centralized Automatic Reporting on Trunks (CAROT), or equivalent, is to be used, the equipment at the end office shall comply with Bellcore document SR-TSV-002275, BOC Notes on the LEC Networks—1990, section 8, Item 2.

(ii) Transmission test circuits are available with a variety of options. These include single frequency and multifrequency tone generators with one or more generator output terminals, quiet terminations, and loop around test arrangements for both one-way and two-way trunks.

(iii) Where multifrequency generators are used, they are usually arranged to provide a minimum of three frequencies. With some equipment, up to seven additional frequencies may be provided if needed. No industry standardization of test frequencies is as yet provided. Therefore, it is important that the selection of frequencies, the order in which they are applied and the time interval for application of each frequency be agreed upon by the connecting company and the RUS borrower and listed in appendix A of this section in those situations where connecting companies request the installation of multifrequency generators in borrowers' central offices.

(iv) The milliwatt generator shall be solid-state and generate the analog or digital equivalent of 1004 Hz. The milliwatt generator shall be assigned to a 4-wire analog test port or be digitally generated. All 2-wire and 4-wire voice frequency ports are at a nominal 0 dBm0 level. The level of the 1004 Hz tone generator shall appear at outgoing 2-wire and 4-wire ports at 0 dBm ± 0.5 dB. For direct digital connections, the encoded output shall be the digital equivalent of a 0 dBm0 ± 0.5 dB signal.

(v) Reference tone generators can be used individually or they can be part of a loop around test arrangement. If both single frequency and multifrequency reference tone generators are to be provided, only one can be arranged as part of a loop around test. Where a loop around arrangement is provided, the generator output can be obtained by dialing singly one of the two line terminals. By dialing the other line terminal singly, usually a 900 ohm resistor in series with a 2.16 microfarad capacitor is connected to the circuit under test to

act as a ''quiet termination'' for noise measurements and other tests. Whenever both line terminals are held simultaneously, both the milliwatt supply and the quiet termination shall be lifted off and a ''loop around'' condition established. This permits the overall loss to be determined from the distant office by going out over one trunk, looping around in the end office and returning over the other trunk. The insertion loss of this test arrangement when used in a loop around configuration should not exceed 0.1 dB at the frequencies specified for the milliwatt supply. Unless otherwise specified, continuous off-hook supervision is to be provided on both line terminals to prevent collusive calling without charge. It will be permissible to accomplish the quiet termination by opening the 4-wire path internally and to accomplish the loop around by digital switching.

(vi) Provision shall be made so that the milliwatt supply can be manually patched to circuits.

(vii) Test jack access shall be provided for all interoffice trunks of the voice frequency type. The jack access shall be properly designated for line, drop, monitor, and signaling leads plus any other jacks as requested by the owner. This may be accomplished by a set of jacks located at the maintenance center which have access to each trunk on a switching basis.

(p) *Traffic*—(1) *General engineering guidelines.* (i) The Traffic Table, based on the Erlang Lost-Calls-Cleared Formula, shall be used for determining the quantity of intraoffice paths, registers, and senders where full availability conditions apply. The following table shows the traffic capacity in CCS for 1 to 200 trunks at nine grades of service.

TRAFFIC TABLE

Full Availability for Random Traffic

LOST-CALLS-CLEARED

Offered Traffic Expressed in CCS

Number of Trunks	B-.001	.002	.005	.01	.02	.05	.1	.2	.5	Number of Trunks
1	0	0	0	0	1	2	4	9	36	1
2	2	3	4	5	8	14	22	36	98	2
3	7	9	13	17	22	32	46	69	165	3
4	16	19	25	31	39	55	74	106	234	4
5	27	32	41	49	60	80	104	144	304	5
6	41	48	58	69	82	107	135	184	374	6
7	57	65	78	90	106	135	168	224	445	7
8	74	83	98	113	131	163	202	265	516	8
9	92	103	120	136	156	193	236	307	586	9
10	111	123	143	161	183	224	270	348	656	10
11	131	145	166	186	210	255	306	391	729	11
12	152	167	190	212	238	286	341	433	801	12
13	174	190	215	238	266	318	377	476	872	13
14	196	213	240	265	295	350	413	519	944	14
15	219	237	266	292	324	383	449	562	1015	15
16	242	261	292	320	354	415	486	605	1087	16
17	266	286	318	347	384	449	523	648	1158	17
18	290	311	345	376	414	482	560	692	1230	18
19	314	337	372	404	444	515	597	735	1302	19
20	339	363	399	433	474	549	634	779	1374	20
21	364	388	427	462	505	583	671	823	1445	21
22	389	415	455	491	536	617	709	866	1517	22
23	415	441	483	521	567	651	747	910	1589	23
24	441	468	511	551	599	685	784	954	1661	24
25	467	495	540	580	630	720	822	998	1733	25
26	493	523	568	611	662	754	860	1042	1805	26
27	520	550	598	641	693	788	898	1086	1876	27
28	546	578	627	671	725	823	936	1130	1948	28
29	573	606	656	702	757	858	974	1174	2020	29
30	600	634	685	732	789	893	1012	1218	2092	30
31	628	662	715	763	822	928	1050	1263	2164	31
32	655	690	744	794	854	963	1089	1307	2236	32
33	683	719	774	825	887	998	1127	1351	2308	33

TRAFFIC TABLE—Continued

Full Availability for Random Traffic

LOST-CALLS-CLEARED

Offered Traffic Expressed in CCS

Number of Trunks	B-.001	.002	.005	.01	.02	.05	.1	.2	.5	Number of Trunks
34	711	747	804	856	919	1033	1165	1395	2380	34
35	739	776	834	887	951	1068	1203	1439	2452	35
36	767	805	864	918	984	1104	1242	1484	2524	36
37	795	834	895	950	1017	1139	1281	1528	2595	37
38	823	863	925	981	1050	1174	1319	1572	2667	38
39	851	892	955	1013	1083	1210	1358	1617	2739	39
40	880	922	986	1044	1116	1246	1396	1661	2811	40
41	909	951	1016	1076	1149	1281	1435	1706	2883	41
42	937	980	1047	1108	1182	1317	1474	1750	2955	42
43	966	1010	1078	1140	1215	1352	1512	1795	3027	43
44	995	1040	1109	1171	1248	1388	1551	1839	3099	44
45	1024	1070	1140	1203	1282	1424	1590	1884	3171	45
46	1053	1099	1171	1236	1315	1459	1629	1928	3243	46
47	1083	1129	1202	1268	1349	1495	1668	1973	3315	47
48	1112	1159	1233	1300	1382	1531	1706	2017	3387	48
49	1141	1189	1264	1332	1416	1567	1745	2062	3459	49
50	1170	1220	1295	1364	1449	1603	1784	2106	3531	50
51	1200	1250	1327	1397	1483	1639	1823	2151	3603	51
52	1229	1280	1358	1429	1516	1675	1862	2195	3675	52
53	1259	1310	1390	1462	1550	1711	1901	2240	3747	53
54	1289	1341	1421	1494	1584	1747	1940	2285	3819	54
55	1319	1371	1453	1527	1618	1783	1979	2329	3891	55
56	1349	1402	1484	1559	1652	1819	2018	2374	3962	56
57	1378	1432	1516	1592	1686	1856	2057	2418	4034	57
58	1408	1463	1548	1625	1719	1892	2096	2463	4106	58
59	1439	1494	1579	1657	1753	1928	2136	2508	4178	59
60	1468	1525	1611	1690	1787	1965	2174	2552	4250	60
61	1499	1556	1643	1723	1821	2001	2214	2597	4322	61
62	1529	1587	1675	1756	1855	2037	2253	2642	4394	62
63	1559	1617	1707	1789	1889	2073	2292	2687	4466	63
64	1590	1648	1739	1822	1923	2110	2331	2731	4538	64
65	1620	1679	1771	1855	1958	2146	2370	2776	4610	65
66	1650	1710	1803	1888	1992	2182	2409	2821	4682	66
67	1681	1742	1835	1921	2026	2219	2449	2865	4754	67
68	1711	1773	1867	1954	2060	2255	2488	2910	4826	68
69	1742	1804	1900	1987	2094	2291	2527	2955	4898	69
70	1773	1835	1932	2020	2129	2328	2566	3000	4970	70
71	1803	1867	1964	2053	2163	2364	2606	3044	5042	71
72	1834	1898	1997	2087	2197	2401	2645	3089	5114	72
73	1865	1929	2029	2120	2232	2438	2684	3134	5186	73
74	1895	1961	2061	2153	2266	2474	2723	3178	5258	74
75	1926	1992	2093	2186	2300	2511	2763	3223	5330	75
76	1957	2024	2126	2219	2335	2547	2802	3268	5402	76
77	1988	2055	2159	2253	2369	2584	2841	3313	5474	77
78	2019	2087	2191	2286	2404	2620	2881	3357	5546	78
79	2050	2118	2223	2319	2438	2657	2920	3402	5618	79
80	2081	2150	2256	2353	2473	2694	2959	3447	5690	80
81	2112	2182	2289	2386	2507	2730	2999	3492	5762	81
82	2143	2213	2321	2420	2542	2767	3038	3537	5834	82
83	2174	2245	2354	2453	2577	2803	3077	3581	5906	83
84	2206	2277	2386	2487	2611	2840	3117	3626	5977	84
85	2237	2309	2419	2521	2646	2877	3156	3671	6049	85
86	2268	2340	2452	2554	2680	2913	3196	3716	6121	86
87	2299	2372	2485	2588	2715	2950	3235	3761	6193	87
88	2331	2404	2517	2621	2750	2987	3275	3805	6265	88
89	2362	2436	2550	2655	2784	3024	3314	3850	6337	89
90	2393	2468	2583	2688	2819	3060	3353	3895	6409	90
91	2425	2500	2616	2722	2854	3097	3393	3940	6481	91
92	2456	2532	2649	2756	2889	3134	3432	3984	6553	92
93	2488	2564	2682	2790	2923	3171	3471	4029	6625	93
94	2519	2596	2715	2823	2958	3208	3511	4074	6697	94

TRAFFIC TABLE—Continued
Full Availability for Random Traffic
LOST-CALLS-CLEARED
Offered Traffic Expressed in CCS

Number of Trunks	B-.001	.002	.005	.01	.02	.05	.1	.2	.5	Number of Trunks
95	2551	2628	2748	2857	2993	3244	3551	4119	6769	95
96	2582	2660	2781	2891	3028	3281	3590	4164	6841	96
97	2614	2692	2814	2925	3063	3318	3630	4209	6913	97
98	2645	2724	2847	2958	3097	3355	3669	4253	6985	98
99	2677	2757	2880	2992	3132	3392	3708	4298	7057	99
100	2709	2789	2913	3026	3167	3429	3748	4343	7129	100
105	2867	2950	3078	3196	3342	3613	3946	4567	7489	105
110	3027	3112	3244	3366	3516	3798	4143	4792	7849	110
115	3186	3275	3411	3536	3691	3983	4341	5016	8209	115
120	3347	3437	3578	3707	3867	4168	4539	5241	8569	120
125	3507	3601	3745	3878	4043	4353	4737	5465	8929	125
130	3669	3765	3912	4049	4219	4539	4935	5689	9289	130
135	3830	3929	4081	4221	4395	4724	5133	5914	9649	135
140	3992	4093	4249	4392	4571	4910	5332	6138	10009	140
145	4155	4258	4418	4564	4748	5095	5530	6363	10369	145
150	4318	4423	4586	4737	4925	5282	5728	6587	10729	150
155	4481	4589	4755	4909	5102	5467	5927	6812	11089	155
160	4644	4755	4925	5082	5279	5654	6125	7037	11449	160
165	4808	4920	5094	5255	5457	5840	6324	7261	11809	165
170	4972	5087	5264	5428	5634	6026	6523	7486	12169	170
175	5137	5253	5434	5602	5811	6213	6722	7710	12529	175
180	5301	5420	5604	5775	5989	6399	6920	7935	12889	180
185	5466	5587	5775	5949	6167	6586	7119	8160	13249	185
190	5631	5754	5945	6123	6345	6773	7318	8384	13609	190
195	5797	5922	6116	6296	6524	6960	7517	8609	13969	195
200	5962	6089	6287	6471	6702	7146	7716	8834	14329	200

(ii) The traffic capacity for all interoffice trunks shall be based on full availability, even though the distant office itself is not engineered to provide full availability access.

(iii) The Traffic Table may also be used to determine the approximate traffic capacity of high-usage intertoll trunks. The traffic offered to high-usage groups may be read at B.10, signifying that 10 percent of the traffic overflows to the alternate route. This approximates the HU12 table used by AT&T.

(iv) In reading the trunk quantity from the table, the higher quantity shall be used when the CCS load is three or more CCS over the lower quantity. For example, the number of trunks justified for 294 CCS at B.005 is 16, but for 295 CCS 17 trunks are justified.

(v) Limited availability is not permitted.

(vi) The traffic capacity in the following table should be used for small trunk groups such as pay station, special service trunks, intercept, and PBX trunks, unless otherwise specified in appendix A of this section:

Number of Circuits	Permissible CCS
1	10
2	20
3	30
4	40

(vii) The percentage of lines equipped for pushbutton dialing is to be used to determine the number of tone receivers. Local registers, if required, shall be supplied on the basis of all dial pulse.

(2) *Grade of service.* (i) Grade of service specifies the expected performance when there are adequate service facilities for an assumed volume of traffic. It is expressed as a portion of the total traffic during a busy hour that cannot be terminated immediately or within a predetermined time period due to congestion. This places responsibility on the traffic engineers to specify facilities which will be entirely satisfactory to the users and which can be equipped

at a price which will be accepted as reasonable.

(ii) The number of calls encountering dial tone delay in excess of 3 seconds, measured over the busy hour of the four high-consecutive week (4HW) period, shall not be more than 1.5 percent.

(iii) The average post dialing delay objective for an intraoffice call shall not exceed 1 second. This includes all connect, operate, and translation time.

(iv) The line to line (intraoffice) network matching loss objective shall be 0.02 or less.

(v) The blocking probabilities related to trunks include both ''mismatch'' probability and probability of ''all trunks busy.'' It is likely that the ''mismatch'' will be negligible in that many digital central offices have essentially nonblocking switching characteristics. The objectives for trunk connections are as follows:

(A) Subscriber to outgoing trunk objective 0.01 or less;

(B) Incoming trunk to subscriber objective 0.02 or less; and

(C) Local trunk tandem objective 0.01 or less.

(vi) Groups of common service circuits are to be engineered utilizing the full availability traffic tables that appear in paragraph (p)(1)(i) of this section at the following stipulated probabilities:

(A) Outgoing trunks to 2/6 MF or dial pulse senders at B.001;

(B) Incoming trunks to 2/6 MF receivers at B.001;

(C) Incoming nondelay dial trunks to receivers at B.001; and

(D) Incoming trunks with start dial at B.01.

(vii) Remote Switching Terminals (RST's) shall meet the same grade of service objectives as the host.

(3) *Holding times.* For the purpose of estimating the quantity of common control circuits, the following average holding times may be used. These holding times are conservative and represent the average effective and ineffective call. If these holding times are to be used, it must be so stated in appendix A of this section.

(i) The following average call holding times (HT) may be used.

Type of Call	HT—Seconds
Intraoffice	120
EAS	150
Special Service, Intercept, Verification	60
Toll, CLR	300
Toll, S-S	24
Toll, PPCS	270

(ii) The following average subscriber dialing holding times may be used (times used to dial digits do not include machine time).

	Digits Dialed	DP Sec.	Push-button Sec.
Operator, Non-Pay Station	1	4.7	3.4
Special Service	3	7.7	5.0
Local	7	13.7	8.2
EAS	7	13.7	8.2
DDD: 1/0+7	8	15.2	9.0
DDD: 1/0+10	11	19.7	11.4
Dialing Time Per Digit	-	1.5	0.8
Dial Tone Response	-	3.2	2.6

(iii) The following average incoming register holding times may be used (times for digit registrations do not include machine time).

	Basic		Additional Per Digit
	Holding Time (Sec.)	Digits	
MF Receiver from:			
No. 5 Crossbar—Non-LAMA	1.4	4	0.14
No. 5 Crossbar—LAMA	2.3	4	0.14
Crossbar Tandem & 4A Toll	3.1	4	0.14
No. 1 ESS	1.4	4	0.14
Key Pulsing Switchboard	5.2	4	0.60
DP Receivers—10 PPS from:			
SxS	6.0	4	1.5
Dialing Switchboard	6.6	4	1.3
4A Toll	5.6	5[1]	-
Crossbar Tandem	4.9	4	1.2

[1]No reduction for fewer digits.

(iv) The following average sender holding times may be used (does not include machine setup and release time).

	Basic		Additional Per Digit
	Holding Time (Sec.)	Digits	
MF Senders:			
No. 5 Crossbar	1.5	4	0.14
Crossbar Tandem & 4A Toll[1]	2.0	4	0.14
TSP/TSPS	2.4	7	0.14
SxS—CAMA, Called Number	3.7	7	0.14
SxS—CAMA, Calling Number	1.3	7	-
DP Senders—10 PPS:			
With Overlap Pulsing[2]	9.1	Up to 6	1.8

	Basic		Additional Per Digit
	Holding Time (Sec.)	Digits	
Without Overlap Pulsing	4.6	4	1.2

[1]Add 1.3 seconds for ANI outpulsing on special toll (0+) calls and on DDD calls if AMA is not provided.

[2]Assumes overlap outpulsing starting on receiving of third digit; applies only to calls handled on direct trunk groups.

(4) *Traffic data requirements.* (i) Traffic measurements are composed of primarily two types—counts and usage. The following types of traffic data recording are required:

(A) *Peg count* registers shall be incremented when a successful network connection is established to a particular circuit group such as trunks, senders, digital receivers, etc.

(B) *Overflow count* registers shall be incremented when access to a particular circuit group is denied due to all resource busy condition.

(C) *Network blockage count* registers shall be incremented due to an unavailability of a path in an access or switching matrix network.

(D) *Usage* measurements of the length of time associated with a particular setup event or network connection shall be made. Usage data measurements are normally collected by scanning circuit groups resources every 10 or 100 seconds to determine busy/idle states. Measurements are accumulated and read directly in CCS (hundred call seconds).

(E) *Service delay* measurements shall provide percentage counts of the calls for a particular service that are delayed beyond a specified interval of time, e.g., calls not receiving dial tone within 3 seconds after call origination.

(ii) Traffic data shall be stored in electronic storage registers or block of memory consisting of one or more traffic counters for each item to be measured. The registers listed in paragraph (p)(4)(i) of this section shall be associated with the interoffice trunks, switching network and central control equipment in such a manner that the register readings can be used to determine the traffic load and flow to, from and within the system. Two-way trunks shall be metered to indicate inward and outward seizures. The bidder shall indicate what registers are to be supplied and their purpose.

(iii) The measured data shall be shown on a printout. It should be possible to have local or remote printout, or both. Arrangement shall be made for automatic data printout on command for 15-, 30-, or 60-minute intervals as required, and be arranged for automatic start-stop and in accordance with revenue separation procedures current at the time of contract.

(iv) All traffic records shall have dates and times and office identification.

(q) *Transmission*—(1) *General.* The transmission characteristics will be governed by the fact that the switching matrix will be based on digital operation. Unless otherwise stated, the requirements are in terms of analog measurements made from Main Distributing Frame (MDF) to MDF terminals, excluding cabling loss.

(2) *Impedance.* For the purpose of this section, the nominal input impedance of analog ports in an end office shall be 900 ohms for 2-wire ports and 600 ohms for 4-wire ports. Where the connecting facility or equipment is other than this impedance, suitable impedance matching shall be provided by the bidder when specified by the owner.

(3) *Insertion loss.* The insertion loss in both directions of transmission at 1004 Hz shall meet the following requirements when measured with a 0 dBm input signal at 900 ohms (or 600 ohms, when required) at a temperature of 77° F ± 9° F (25° C ± 5° C).

(i) *Trunk-to-trunk or trunk-to-line.* The loss shall be set between 0 and 0.5 dB for 2-wire to 2-wire, 2-wire to 4-wire, or 4-wire to 4-wire voice frequency connections.

(ii) *Line-to-line.* The loss shall be set between 0 and 2 dB.

(iii) *Direct digital interface.* On a direct digital interface, the loss through the office shall be adjusted to the proper level in the receive side.

(iv) *Stability*. The long-term allowable variation in loss through the office shall be ± 0.5 dB from the loss specified by the bidder.

(4) *Frequency response (loss relative to 1004 hz)* shall meet the following requirements.

(i) *Trunk-to-trunk.*

	Loss at 0 dBm0 Input[1]	
Frequency (Hz)	2-Wire to 2-Wire	4-Wire to 4-Wire
60	20 dB Min.[2]	16 dB Min.[2]
200	0 to 5 dB	0 to 3 dB
300–3000	−0.5 dB to 1 dB	−0.3 to +0.3 dB
3300	1.5 dB Max.	1.5 dB Max.
3400	0 to 3 dB	0 to 3 dB

[1](−) means less loss and (+) means more loss.
[2]Transmit End

(ii) *Line-to-line.*

Frequency (Hz)	Loss at 0 dBm0 Input[1]
60	20 dB Min.[2]
300	−1 to +3 dB
600–2400	±1 dB
3200	−1 to +3 dB

[1](−) means less loss and (+) means more loss.
[2]Transmit End

(iii) *Trunk-to-line.* The trunk-to-line frequency response requirements shall be a compromise between those values specified in paragraphs (q)(4)(i) and (q)(4)(ii) of this section.

(5) *Overload level.* The overload level at 900 ohm impedance shall be +3 dBm0.

(6) *Gain tracking (linearity)* shall meet the following requirements.

Input Signal Level[1]	Maximum Gain Deviation
+3 to −37 dBm0	±0.5 dB
−37 to −50 dBm0	±1 dB

[1]1004 Hz reference at 0 dBm0.

(7) *Return loss.* (i) The specified return loss values are determined by the service and type of port at the measuring (near) end. Two-wire ports are measured (near end) at 900 ohms in series with 2.16 microfarads and 4-wire ports are measured at 600 ohms resistive.

(ii) Far end test terminations shall be as follows:

(A) Loaded line circuit—1650 ohms in parallel with the series combination of .005 microfarads and 100 ohms;

(B) Nonloaded line circuit—800 ohms in parallel with the series combination of .05 microfarads and 100 ohms;

(C) Special service line circuit including electronic lines and carrier lines—900 ohms in series with 2.16 microfarads;

(D) Two-wire trunk—900 ohms in series with 2.16 microfarads; and

(E) Four-wire trunk—600 ohms.

(iii) For trunk-to-trunk (2-wire or 4-wire) connections the echo return loss (ERL) shall be 27 dB, minimum and the singing return loss (SRL) shall be 20 dB, minimum low and 23 dB, minimum high.

(iv) For trunk-to-line (2-wire or 4-wire) connections the ERL shall be 24 dB, minimum and the SRL shall be 17 dB, minimum low and 20 dB, minimum high.

(v) For line-to-line or line-to-trunk (2-wire or 4-wire) connections the ERL shall be 18 dB, minimum and the SRL shall be 12 dB, minimum low and 15 dB, minimum high.

(8) *Longitudinal balance.* The minimum longitudinal balance, with dc loop currents of 20 to 70 mA, shall be 60 dB at all frequencies between 60 and 2000 Hz, 55 dB at 2700 Hz and 50 dB at 3400 Hz. The method of measurement shall be as specified in the IEEE Std 455–1985, IEEE Standard Test Procedure for Measuring Longitudinal Balance of Telephone Equipment Operating in the Voice Band. Source voltage level shall be 10 volts root-mean-square (rms).

(9) *60 hz longitudinal current immunity.* Under test conditions with 60 Hz, the system noise shall be no greater than 23 dBrnC0 as measured using the configuration in Figure 1.

FIGURE 1—MEASURING THE EFFECTS OF LOW FREQUENCY INDUCTION

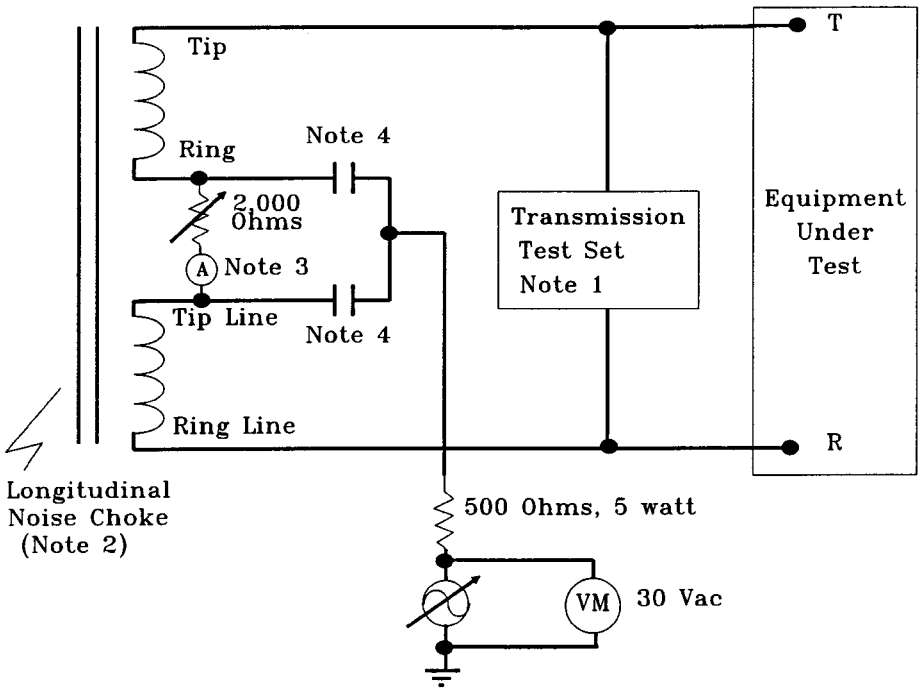

NOTES:
1. 900 ohm termination, C-message weighting, hold coil off
2. SNC Noise Choke 35 W, or equivalent
3. Test at 0.020 Adc and 0.070 Adc
4. 2 ± 0.001 microfarad, 150 Vdc

(10) *Steady noise* (idle channel at 900 ohms impedance) measured on a terminated call shall be 23 dBrnC0 maximum and average 18 dBrnC0 or less. The 3K Hz Flat noise should be less than 35 dBrnC0 as an objective.

(11) *Impulse noise.* The central office switching equipment shall be capable of meeting an impulse noise limit of not more than five counts exceeding 54 dBrnC0 voice band weighted in a 5-minute period on six such measurements made during the busy hour. A Northeast Electronics Company TTS 4002 Impulse Noise Counter, Wilcom T194C, Hewlett Packard 4945, or equivalent, should be used for the measurements. The measurement shall be made by establishing a normal connection from the noise counter through the switching equipment in its off-hook condition to a quiet termination of 900 ohms impedance. Office battery and signaling circuit wiring shall be suitably segregated from voice and carrier circuit wiring, and frame talking battery filters provided, if and as required, in order to meet these impulse noise limits.

(12) *Crosstalk coupling.* Worst case equal level crosstalk is to be 75 dB minimum in the range 200–3400 Hz. This is to be measured between any two paths through the system connecting a 0 dBm0 level tone to the disturbing pair.

(13) *Quantizing distortion.* (i) The switching system shall meet the following requirements.

Input Level (dBm0) 1004 or 1020 Hz	Minimum Signal to Distortion with C-Message Weighting
0 to −30	33 dB
−30 to −40	27 dB
−40 to −45	22 dB

(ii) Due to the possible loss of the least significant bit on direct digital

connections, a signal to distortion degradation of up to 2 dB may be allowed where adequately justified by the bidder.

(14) *Absolute delay.* The absolute one-way delay through the switching system, excluding delays associated with RST switching, shall not exceed 1000 microseconds analog-to-analog measured at 1800 Hz.

(15) *Envelope delay distortion.* On any properly established connection, the envelope delay distortion shall not exceed the following limits.

Frequency Range (Hz)	Microseconds
1000 to 2600	190
800 to 2800	350
600 to 3000	500
400 to 3200	700

(16) *Digital error rate.* The digital switching system shall not introduce an error into digital connections which is worse than one error in 10^8 bits averaged over a 5-minute period.

(17) *Battery noise.* Noise across battery at power board distribution bus terminals shall not exceed 35 dBrnC during the busy hour.

(18) Radio and television interference. The central office switching equipment shall be designed and installed so that radiation of high frequency noise will be limited so as not to interfere with radio and television receivers.

(r) *Timing intervals*—(1) *Type of equipment required.* The equipment for providing the specified timing intervals shall be solid-state.

(2) *Tolerance.* Where a range of time is specified as minimum and maximum, the lower limits shall be considered as controlling and the variation between this minimum and the actual maximum shall be kept as small as practicable. In no case shall the quoted upper limit be exceeded.

(3) *Permanent signal timing.* Lockout shall occur after an interval of 20 to 30 seconds after receipt of dial tone if a ''permanent'' condition occurs prior to the transmission of dial pulses or push-button dialing signals. This interval may be reduced appreciably during periods of heavy traffic.

(4) *Partial dial timing.* Partial dial timing shall be within 15 to 37 seconds. This timing may be reduced appreciably during periods of heavy traffic.

(5) *Charge delay timing.* Charge delay timing shall be within 2 seconds.

(6) *Called party disconnect timing.* Timed disconnect of a terminating path under control of the called party shall be 10 to 32 seconds.

(7) *Timing intervals for signals involved in distance dialing.* Timing intervals shall be provided to meet the requirements for distance dialing equipment, which have been established in Bellcore document SR-TSV-002275, BOC Notes on the LEC Networks—1990. Some of the more important times which this document specifies are for:

(i) Disconnect signal;

(ii) Wink signal;

(iii) Start dialing signal;

(iv) Pulse delay signal;

(v) Go signal;

(vi) Digit timing; and

(vii) Sender, register, and link attachment timing.

(s) *Power requirements and equipment*—(1) *Operating voltage.* The nominal operating voltage of the central office shall be 48 volts dc, provided by a battery with the positive side tied to system ground.

(2) *Batteries.* (i) When battery cells of the lead antimony type are specified, the pasted plate type shall be considered adequate.

(ii) When lead calcium cells are specified, no cell shall differ from the average voltage of the string of fully charged cells by more than ±0.03 volt when measured at a charging rate in amperes equivalent to 10 percent of the ampere hour capacity of the cells. Similarly, when cells are fully charged and floating between 2.30 and 2.33 volts per cell, the cell voltage of any cell in a given string shall not differ more than ±0.03 volt from the average. These requirements are for test purposes only and do not apply to operating conditions.

(iii) Voltage readings shall be corrected by a temperature coefficient of 0.0033 volt per degree F (0.006 per degree C), whenever temperature variations exist between cells in a given string. This correction factor shall also be applied when comparing cell voltages taken at different times and at different temperatures. The correction

factor shall be added to the measured voltage when the temperature is above 77°F (25°C) and subtracted when the temperature is below 77°F (25°C).

(iv) The specific gravity readings of lead antimony cells at full charge shall be 1.210 ± .010 at 77°F (25°C) at maximum electrolyte height.

(v) When counter cells are supplied by the bidder, they shall be the dry counter electromotive force (CEMF) type.

(vi) When lead antimony batteries are specified, they shall be designed to last a minimum of 10 years when maintained on a full float operation between 2.15 and 2.17 volts per cell. When lead calcium batteries are specified, they shall be designed to last a minimum of 20 years when maintained on full float operation between 2.17 and 2.25 volts per cell. The battery shall be clearly designated as ''antimony'' or ''calcium'' by means of stencils, decals or other devices.

(vii) Each battery cell shall be equipped with an explosion control device.

(viii) The battery size shall be calculated in accordance with standard procedures. The battery in no case shall have a reserve capacity in ampere hours less than four times the current capacity of the largest charger.

(3) *Charging equipment.* (i) Charging shall be on a full float basis. The rectifiers shall be of the full wave, self-regulating, constant voltage, solid-state type and shall be capable of being turned on and off manually.

(ii) When charging batteries, the voltage at the battery terminals shall be adjustable and shall be set at the value recommended for the particular battery being charged, providing it is not above the maximum operating voltage of the switching system equipment. The voltage shall not vary more than plus or minus 0.02 volt per cell between 10 percent load and 100 percent load. Between 3 percent and 10 percent load, the output voltage shall not vary more than plus or minus 0.04 volt per cell. Beyond full load current, the output voltage shall drop sharply. The output voltage shall be maintained with the line voltage variations of plus or minus 10 percent. Provision shall be made to change the output voltage of the rectifier manually to 2.25 volts per cell to provide an equalization charge on the battery.

(iii) The charger noise shall not exceed 22 dBrnC when measured with a suitable noise measuring set and under the rated battery capacitance and load conditions as determined in Figure 2.

FIGURE 2—CHARGER NOISE TEST

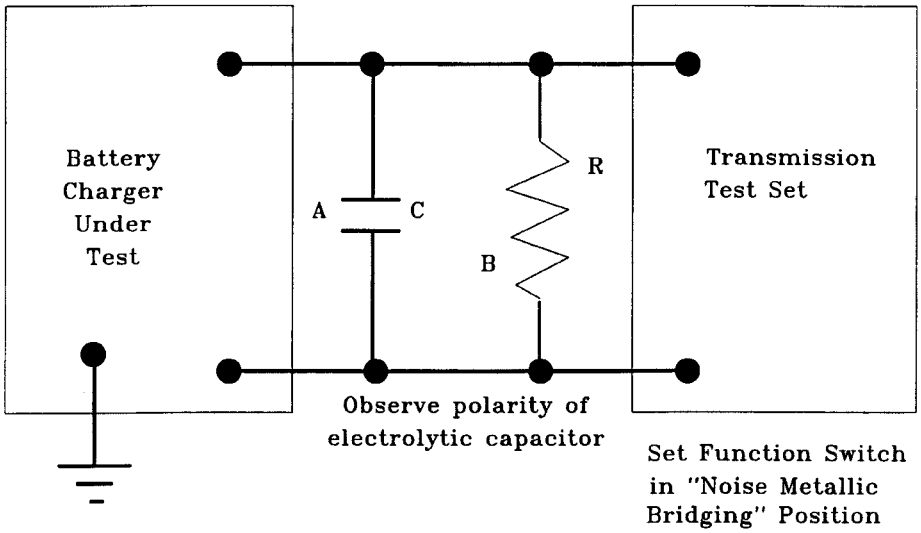

The manufacturer may elect to eliminate the capacitor C from the measurement.

A. Capacitance in μ F = 30,000 μ F per ampere-hour per cell. For example, 25 cells at 100 ampere-hour would be equivalent to a capacitance of:

$(30,000 \times 100)/25 = 120,000$ μ F

B. The value of the resistive load R is determined by the nominal battery voltage in volts divided by the full load rating in amperes. For example, for a 48 volt battery and a full load current of 24 amperes, the load resistance R is 48/24 = 2 ohms of appropriate power handling capacity.

(iv) The charging equipment shall indicate a failure of charging current, whether due to ac power failure, an internal failure in the charger, or to other circumstances which might cause the output voltage of the charger to drop below the battery voltage. Where a supplementary constant current charger is used, an alarm shall be provided to indicate a failure of the charger.

(v) Audible noise developed by the charging equipment shall be kept to a minimum. Acoustic noise resulting from operation of the rectifier shall be expressed in terms of dB indicated on a sound level meter conforming to ANSI S1.4–1983, Specification for Sound Level Meters, and shall not exceed 65 dB (A-weighting) measured at any point 5 feet (152.4 cm) from any vertical surface of the rectifier.

(vi) The charging equipment shall be designed so that neither the charger nor the central office switching equipment is subject to damage in case the battery circuit is opened for any value of load within the normal limits.

(vii) The charging equipment shall have a capacity to meet the requirements of central office size and special requirements of the owner in appendix A of this section.

(viii) Minimum equipment requirement for chargers is one of the following:

(A) Two chargers either capable of carrying the full office load as specified in Item 12 of appendix A of this section; or

(B) Three chargers each capable of carrying half the office load as specified in Item 12 of appendix A of this section.

(4) *Miscellaneous voltage supplies.* (i) Any power supply required for voltages other than the primary battery voltage shall be provided by either a solid-state dc-to-dc converter or dc-to-ac inverter, operating from the central office battery or from a separate battery and

charger. These power supplies shall meet the noise limit specified for chargers in paragraph (s)(3)(iii) of this section, except the capacitor ''C'' shall be eliminated and the resistive load ''R'' shall be determined by the nominal output voltage in volts divided by the full load current rating in amperes. This requirement does not preclude the use of commercial ac power to operate input/output devices.

(ii) Power converters required for the purpose of providing various operating voltages to printed circuit boards or similar equipment employing electronic components shall be provided in duplicate with each unit capable of immediately assuming the full operating load upon failure of a unit. An exception to the duplicate power converter requirement permits nonduplicated power converter(s) to be utilized where there is full compliance with the following criteria.

(A) The failure of any single nonduplicated power converter shall not reduce the grade of service of common control and service circuits to any individual line or trunk by more than 50 percent.

(B) The failure of any single nonduplicated power converter shall not reduce the traffic carrying capacity of any interoffice trunk group by more than 50 percent.

(C) In central office switching systems of 400 or more equipped lines, any single nonduplicated power converter failure shall not cause a complete loss of service to more than 100 equipped lines.

(D) In central office switching systems of less than 400 equipped lines, any single nonduplicated power converter failure shall not cause a complete loss of service to more than 25 percent of the total equipped lines.

(5) *Ringing generators.* Ringing generators supplied on an ancillary basis shall be selected from RUS Bulletin 1755I-100, List of Materials Acceptable for Use on Telephone Systems of RUS Borrowers. Regardless of whether the ringing is generated on an ancillary basis or is generated integrally to the switching system, the ringing equipment shall meet the requirements of this section.

(i) *Ringing equipment provisioning.* (A) Redundant ringing equipment shall be provided. There shall be automatic transfer to the redundant equipment within the period of one ringing cycle, in case of failure of the equipment in use (either regular or standby). Automatic transfer shall not take place under any other conditions. Manual transfer in each direction shall be provided.

(B) An exception to the redundant ringing equipment requirement permits nonredundant ringing equipment to be utilized where there is full compliance with the following service criteria.

(*1*) In a central office switching system of 400 or more equipped lines, a single nonduplicated ringing source failure shall not cause the complete loss of ringing capability to more than 100 lines.

(*2*) In a central office switching system of less than 400 equipped lines, a single nonredundant ringing source failure shall not cause the complete loss of ringing capability to more than 25 percent of the total equipped lines.

(ii) *Output voltage.* (A) The ringing generators shall have an output voltage which approximates a sine wave and, as a minimum, shall be suitable for ringing straight-line ringers. Although not a requirement for RUS listing, decimonic, synchromonic, or harmonic ringing may also be specified in appendix A of this section.

(B) The ringing generator shall obtain its energy from the nominal 48-volt office battery.

(C) The output of each generator shall have three or more voltage taps or a single tap with associated variable control. Taps or control shall be easily accessible as installed in the field. Software control of ringing generator outputs via I/O devices may be provided in lieu of taps. The taps, or equivalent, shall be designated L, M, and H. The variable control shall have a locking device to prevent accidental readjustment. The outputs at the terminals of the generators with a voltage input of 52.1 volts and rated full resistive load shall be as follows for the ringing frequencies provided:

Frequency Range (Hz)	Output Volts rms (Tolerance 3 Volts)		
	L	M	H
16 2/3 through 20	90	105	120
21 through 30	95	110	120
31 through 42	100	115	130
43 through 54	110	125	140

(D) No voltages in excess of the values in column H of the table in paragraph (s)(5)(ii)(C) of this section shall be provided at the output taps. Additional intermediate and/or lower taps may be provided without restriction.

(iii) *Voltage regulation.* (A) The output voltage for resistive, capacitive power factor of 0.8, and inductive power factor of 0.5 loads from no load to full rated output with 52.1 volts input battery shall not vary more than ±3 percent from the output voltage measured at 1/2 rated output, 1.0 power factor with 52.1 volts dc input applied.

(B) The output voltage for resistive, capacitive power factor of 0.8, and inductive power factor of 0.5 from no load to full rated output with input battery variations between 48–56 volts dc shall not vary more than ± 10 percent from the output voltage measured at 1/2 rated output and 1.0 power factor with 52.1 volts dc input applied.

(C) The output voltage for resistive, capacitive power factor of 0.8, and inductive power factor of 0.5 loads from no load to full rated output and with input battery variations between 44–56 volts dc shall not vary more than +10/−15 percent from the output voltage measured at 1/2 rated output and 1.0 power factor with 52.1 volts dc input applied.

(iv) *Cross ringing.* Unwanted voltage caused by harmonic distortion or intermodulation distortion shall not exceed 15 volts rms when measured within ±5 Hz of any other assigned ringing frequency under any condition of load or input battery specified by paragraph (s)(5)(iii) of this section.

(v) *Frequency stability.* At ambient temperature of 70° ±5°F (21° ±0.3°C), for any combination of capacitive power factor of 0.8, inductive power factor of 0.5, and resistive loads with variations in input battery ranging from 44 to 56 volts, the output frequency shall not vary more than ±1/3 Hz or ±1 percent, whichever is less stringent. At temperatures between 15°F (4°C) to 130°F (54°C), and for any combination of resistive load and variations in input battery ranging from 44–56 volts, the output frequency shall not vary more than ±1/3 Hz or ±1 percent, whichever is less stringent.

(vi) *Self-protection on overloads.* The ringing generator equipment shall be capable of withstanding a short circuit across any pair of output terminals for a period of 5 minutes without fuse operation or damage.

(6) *Interrupter equipment.* (i) The interrupter shall be an integral part of the switching system and shall be controlled by any call processor or equivalent.

(ii) The ringing cycle provided by the interrupter equipment shall not exceed 6 seconds in length. The ringing period shall be 2 seconds.

(7) *Power panels.* (i) Battery and charger control switches, dc voltmeters, dc ammeters, fuses and circuit breakers, supervisory and timer circuits shall be provided as required. Voltmeters shall be provided as specified by the owner.

(ii) Portable or panel mounted frequency meters shall be provided as specified by the owner unless the system is equipped to measure actual ringing generator voltage and frequency outputs internally. If the system is equipped to make such measurements and print the results, the bidder is not required to provide a frequency meter.

(iii) Power panels, cabinets and shelves, and associated wiring shall be designed initially to handle the exchange when it reaches its ultimate capacity as specified by the owner.

(iv) The power panel shall be of the ''dead front'' type.

(t) *Main distributing frames.* (1) The main distributing frame shall provide terminals for terminating all incoming cable pairs. Arresters shall be provided for all incoming cable pairs, or for a smaller number of pairs if specified, provided an acceptable means of temporarily grounding all terminated pairs which are not equipped with arresters is furnished.

(2) The current carrying capacity of each arrester and its associated mounting shall coordinate with a #22 gauge

copper conductor without causing a self-sustaining fire or permanently damaging other arrester positions. Where all cable pairs entering the central office are #24 gauge or finer, the arresters and mountings need only coordinate with #24 gauge cable conductors. Item 13 of appendix A of this section designates the gauge of the cable conductors serving the host office. Item 7 of appendix B of this section designates the gauge of the cable conductors serving the RST(s).

(3) Central office protectors shall be mounted and arranged so that outside cable pairs may be terminated on the left side of protectors (when facing the vertical side of the MDF) or on the back surface of the protectors. Means for easy identification of pairs shall be provided.

(4) Protectors shall have a ''dead front'' (either insulated or grounded) whereby live metal parts are not readily accessible.

(5) Protectors shall be provided with an accessible terminal of each incoming conductor which is suitable for the attachment of a temporary test lead. They shall also be constructed so that auxiliary test fixtures may be applied to open and test the subscriber's circuit in either direction. Terminals shall be tinned or plated and shall be suitable for wire wrapped, insulation displacement or connectorized connections.

(6) If specified in appendix A of this section, each protector group shall be furnished with a factory assembled tip cable for splicing to the entrance cable; the tip cable to be 20 feet (610 cm) in length unless otherwise specified. Factory assembled tip cable shall be #22 gauge and selected from RUS Bulletin 1755I-100, List of Materials Acceptable for Use on Telephone Systems of RUS Borrowers. Tip cable requirements are provided in RUS Bulletin 345–87, PE-87, RUS Specification for Terminating (TIP) Cable. Cables having other kinds of insulation and jackets which have equivalent resistance to fire and which produce less smoke and toxic fumes may be used if specifically approved by RUS.

(7) Protectors shall be mounted on vertical supports, with centers not exceeding 9 inches (22.9 cm). The space between protector units shall be adequate for terminating conductors.

(8) Cable supporting framework shall be provided between the cable entrance and the MDF when overhead cable entrance is specified in Item 14.3.3 of appendix A of this section.

(9) The main distributing frame shall be equipped with a copper ground bus bar having the conductivity of a #6 American Wire Gauge (AWG) copper conductor or a greater conductivity, or may consist of another metal if specifically approved, provided it has adequate cross-sectional area to provide conductivity equivalent to, or better than, bare copper. A guardrail or equivalent shall also be furnished.

(10) Other features not specified in paragraph (t) of this section may be required at the option of the owner, if checked in Item 13.4 of appendix A of this section.

(11) Main frame protector makes and types shall be selected only from RUS Bulletin 1755I-100, List of Materials Acceptable for Use on Telephone Systems of RUS Borrowers. Protectors shall be capable of easy removal.

(u) *Electrical protection*—(1) *Surge protection*. (i) Adequate electrical protection of central office switching equipment shall be included in the design of the system. The characteristics and application of protection devices shall be such that they enable the central office switching equipment to withstand, without damage or excessive protector maintenance, the dielectric stresses and currents that are produced in line-to-ground and tip-to-ring circuits through the equipment as a result of induced or conducted lightning or power system fault-related surges. All wire terminals connected to outside plant wire or cable pairs shall be protected from voltage and current surges.

(ii) Central office switching equipment shall pass laboratory tests, simulating the hostile electrical environment, before being placed in the field for the purpose of obtaining field experience. There are five basic types of laboratory tests which shall be applied to exposed terminals in an effort to determine if the equipment will survive. Figure 3 summarizes these tests and the minimum acceptable levels of protection for equipment to pass them.

FIGURE 3—SUMMARY OF ELECTRICAL REQUIREMENTS AND TESTS

Test	Application Criteria	Peak Voltage or Current	Surge Waveshape	No. of Applications & Max. Time Between	Comments
Current Surge	Low Impedance Paths Exposed to Surges	500A or Lesser Current (See Fig. 5)	10x1000 μ s	5 each Polarity at 1 minute intervals	
60 Hz Current Carrying	High or Low Impedance paths Exposed to Surges	10A rms or Lesser Current (See Fig. 6)	11 Cycles of 60 Hz (0.183 Sec.)	3 each Polarity at 1 minute intervals	
AC Power Service Surge Voltage	AC Power Service Connection	2500V or +3 σ clamping V of arrester employed at 10kV/μ s	1.2x50 μ s	5 each Polarity at 1 minute intervals	AC arrester, if used, must be removed. Communications line arresters, if used, remain in place.
Voltage Surge	High Impedance Paths Exposed to Surges	1000V or +3 σ dc breakdown of arrester employed	10x1000 μ s	Same	All primary arresters, if used, must be removed.
Arrester Response Delay	Paths protected by arresters, such as gas tubes, with breakdown dependent on V. rate of rise.	+3 σ breakdown of arrester employed at 100V/μ s of rise	100V/μ s rise decay to 1/2 V. in tube's delay time	Same	Same

(iii) *Two categories of surge tests.* (A) Current surge tests simulate the stress to which a relatively low impedance path may be subjected before main frame protectors break down. Paths with a 100 Hz impedance of 50 ohms or less shall be subjected to current surges, employing a 10 × 1000 microseconds waveshape as defined in Figure 4. For the purpose of determining this impedance, arresters which are mounted within the equipment are to be considered zero impedance. The crest current shall not exceed 500A; however, depending on the impedance of the test specimen this value of current may be lower. The crest current through the sample, multiplied by the sample's 100 Hz impedance, shall not exceed 1000 volts (V). Where sample impedance is less than two ohms, crest current shall be limited to 500A as shown in Figure 5.

FIGURE 4—EXPLANATION OF SURGE WAVESHAPE

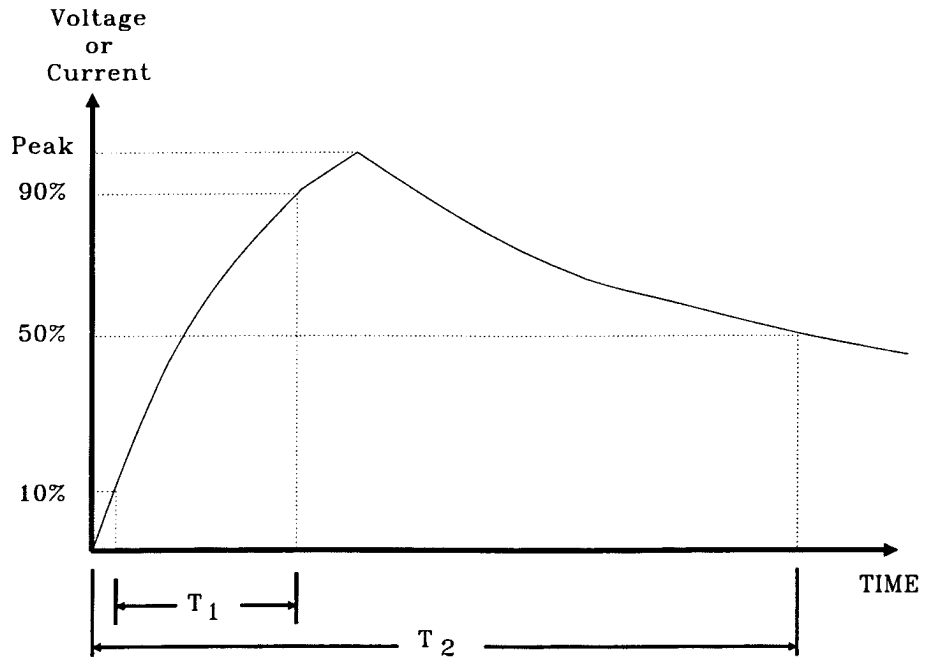

Surge Waveshape is defined as follows:

Rise Time × Time to Decay to Half Crest Value

(For example, 10 × 1000 μ s)

Notes:

T_1 = Time to determine the rate of rise. The rate of rise is determined as the slope between 10% and 90% of peak voltage or current.

T_2 = Time to 50% of peak voltage (decay to half value).

FIGURE 5—EXPLANATION OF SURGE WAVESHAPE

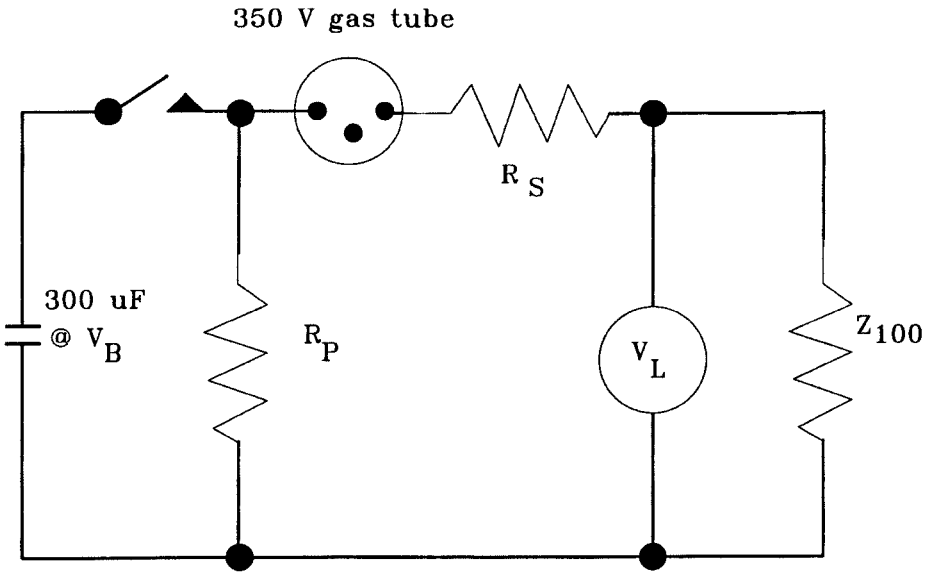

V_L = Not to exceed 1000V
V_B = Charging Voltage
Z_{100} = Test Specimen Impedance to be measured at 100 Hz.
R_P = Parallel Resistance (Waveshape)
R_S = Series Resistance (Current Limiting)

Z_{100}	R_S	R_P	V_B
0	5	∞	2500
1	4	∞	2500
2	3	∞	2500
3	2	∞	1670
4	1	∞	1250
5	0	∞	1000
7.5	0	15	1000
10	0	10	1000
15	0	7.5	1000
20	0	6.7	1000
25	0	6.25	1000
30	0	6	1000
40	0	5.7	1000
50	0	5.5	1000

(B) Sixty Hertz (60 Hz) current-carrying tests should be applied to simulate an ac power fault which is conducted to the unit over the cable pairs. The test should be limited to 10 amperes rms at 60 Hz for a period of 11 cycles (0.1835 seconds) and should be applied longitudinally from line to ground (see Figures 3 and 6 of this section).

FIGURE 6—60 HZ CURRENT SURGE TEST

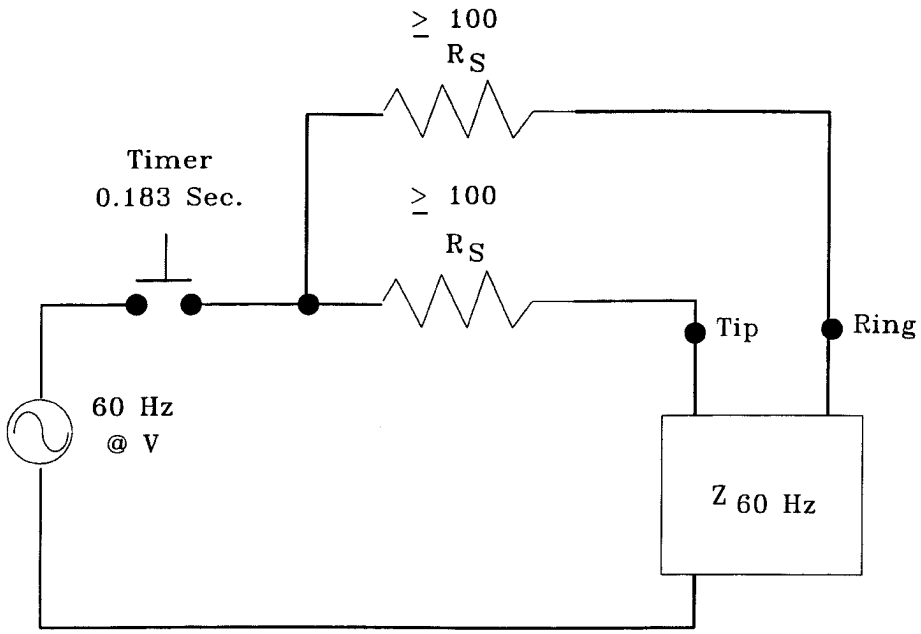

V—700 Volts RMS (Approximately 1000V Peak).

Z_{60}—Test specimen impedance to be measured at 60 Hz.

R_S—Series Resistance (current limiting) in each side of line. (Source impedance never less than 50 Ω longitudinal.)

Z_{60} Hz	R_S
0	140
10	120
20	100
50	100
Over 50	100

(C) AC power service surge voltage tests should be applied to the power input terminals of ac powered devices to simulate switching surges or lightning-induced transients on the ac power system. The test shall employ a 1.2 × 50 microseconds waveshape with a crest voltage of 2500V. Communications line protectors may be left in place for this test. Borrowers are urged to install commercially available surge protectors at the ac service entrance as part of their COE building program.

(D) Voltage surge tests simulate the voltage stress to which a relatively high impedance path may be subjected before primary protectors break down and protect the circuit. To assure coordination with the primary protection while reducing testing to the minimum, voltage surge tests should be conducted at a 1000 volts with primary arresters removed for devices protected by carbon blocks, or the +3 sigma dc breakdown of other primary arresters. Surge waveshape should be 10 × 1000 microseconds.

(E) Arrester response delay tests are designed to stress the equipment in a manner similar to that caused by the delayed breakdown of gap type arresters when subjected to rapidly rising voltages. Arresters shall be removed for these tests, the peak surge voltage should be the +3 sigma breakdown of the arrester in question on a voltage rising at 100V per microsecond and the time for the surge to decay to half voltage shall equal at least the delay time of the tube, as explained in Figure 7.

FIGURE 7—EXPLANATION OF ARRESTER RESPONSE DELAY TIME

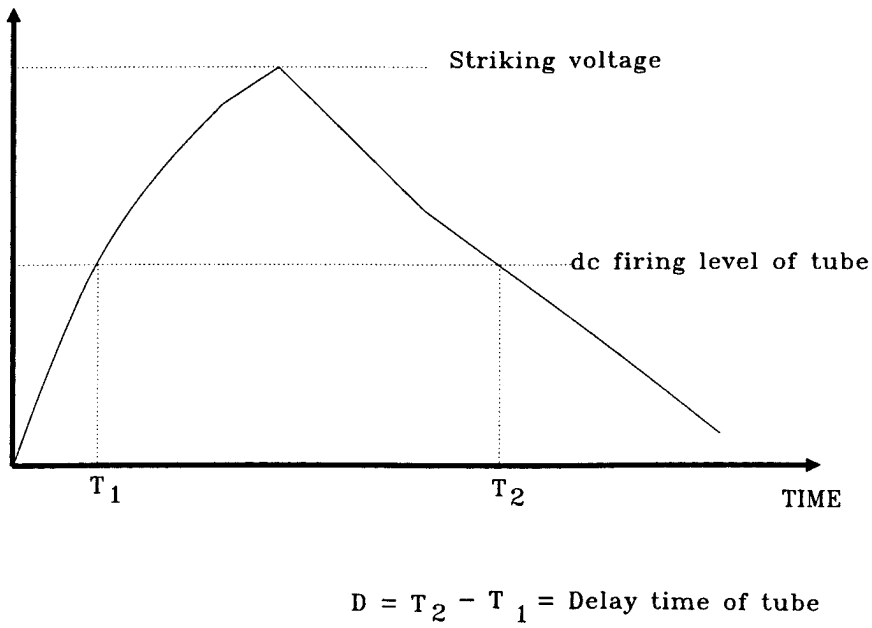

The delay time is that period of time when the potential across an arrester exceeds its dc firing level.

(iv) Five applications of each polarity for the surge tests and three for the 60 Hz Current Carrying Test are the minimum required. All tests should be conducted with not more than 1 minute between consecutive applications in each series of three or five to a specific configuration so that heating effects will be cumulative. As not all tests are required in every application, non-applicable tests should be omitted. Tests should be conducted in the following sequence.

(A) Current Impulse Test.

(B) Sixty Hertz (60 Hz) Current Carrying Test.

(C) AC Power Service Impulse Voltage Test.

(D) Voltage Impulse Test.

(E) Arrester Response Delay Test.

(v) Tests should be applied between each of the following terminal combinations for all line operating conditions.

(A) Line tip to ring.

(B) Line ring to ground.

(C) Line tip to ground.

(D) Line tip to ring tied together to ground.

(2) *Extraordinary surge protection.* A central office or RST may be located in an area where ground conditions prevent the reasonable economic achievement of a low resistance to ground and/or there exists a greater than average probability of surge damage. Such an unusually hostile operating environment shall be recognized and taken into consideration by the bidder in the engineering and specification of the central office switching system and line protection. This subject of operating environment, ground conditions, etc., should be discussed at the time of technical presentation to assure the owner that adequate system protection will be provided by the bidder.

(3) *Dielectric strength.* Arresters shall be removed for all dielectric strength tests. The duration of all dielectric strength tests shall be at least 1 second. The applied potential shall equal or exceed the +3 sigma dc breakdown voltage of the arrester, provided by the

COE manufacturer. Direct current potentials shall be applied between all line terminals and equipment chassis and between these terminals and grounded equipment housings in all instances where the circuitry is dc open circuit from the chassis, or connected to the chassis through a capacitor.

(4) *Insulation resistance.* Following the dielectric tests, the insulation resistance of the installed electrical circuits between wires and ground, with the normal equipment grounds removed, shall not be less than 10 megohms at 500 volts dc at approximately room temperature (68°F (20°C)) and at a relative humidity of approximately 50 percent. The measurement shall be made after the meter stabilizes, unless the requirement is met sooner. Arresters shall be removed for these tests.

(5) *Self-protection.* (i) All components shall be of the self-protecting type, capable of being continuously energized at rated voltage without injurious results.

(ii) The unit equipment shall not be permanently damaged by accidental short circuits of any duration across either the central office side tip and ring or the line side tip and ring. A test is to be made with the unit energized at the highest recommended voltages.

(6) *Static discharge.* Assemblies subject to damage by static discharge shall be identified and special handling instructions shall be supplied.

(v) *Miscellaneous*—(1) *Office wire.* All office wire shall be of soft annealed tinned copper wire meeting the requirements of ASTM Specification B 33–91, Standard Specification for Tinned Soft or Annealed Copper Wire for Electrical Purposes, and of suitable cross-section to provide safe current carrying capacity and mechanical strength. The insulation of installed wire, connected to its equipment and frames, shall be capable of withstanding the same insulation resistance and dielectric strength requirements as given in paragraphs (u)(3) and (u)(4) of this section at a temperature of 120°F (49°C) and a relative humidity of 90 percent.

(2) *Wire wrapped terminals.* These terminals are preferred and where used shall be of a material suitable for wire wrapping. The connections to them shall be made with a wire wrapping tool with the following minimum number of successive nonoverlapping turns of bare tinned copper wire in contact with each terminal.

(i) 6 Turns of 30 Gauge.

(ii) 6 Turns of 26 Gauge.

(iii) 6 Turns of 24 Gauge.

(iv) 5 Turns of 22 Gauge.

(3) *Protection against corrosion.* All metal parts of equipment frames, distributing frames, cable supporting framework, and other exposed metal parts shall be constructed of corrosion resistant materials or materials plated or painted to render them adequately corrosion resistant.

(4) *Screws and bolts.* Screw threads for all threaded securing devices shall be of American National Standard form in accordance with Federal Standard H28, Screw-Thread Standards for Federal Services, unless exceptions are granted to the manufacturer of the switching equipment. All bolts, nuts, screws, and washers shall be of nickel-copper alloy, steel, brass or bronze.

(5) *Temperature and humidity range.* The supplier shall furnish the operating temperature and humidity ranges of the equipment being provided in order that adequate heating and cooling may be supplied (see Items 5.2.1 and 5.2.2 of appendix C of this section).

(6) *Stenciling.* Equipment units and terminal jacks shall be adequately designated and numbered. They shall be stenciled so that identification of equipment units and leads for testing or traffic analysis can be made without unnecessary reference to prints or descriptive literature.

(7) *Equipment frame design.* For newly designed systems, consideration should be given to the desirability of providing frames which can be installed in rooms of normal ceiling height [up to 10 feet (305 cm)]. Where feasible, frames and equipment units shall be designed for ready portability and high salvage value.

(8) *Quantity of equipment bays.* Consistent with system arrangements and ease of maintenance, space shall be provided on the floor plan for an orderly layout of future equipment bays that will be required for anticipated traffic when the office reaches its ultimate size. Readily accessible terminals

shall be provided for connection to interbay and frame cables to future bays. All cables, interbay and intrabay (excluding power), if technically feasible, shall be terminated at both ends by use of connectors.

(w) *Remote switching terminal (RST)*—(1) *General.* The RST is a remotely located digital switching terminal which is placed at a subordinate wire center for subscriber lines and is a part of the host central office from a switching standpoint, and has hardware interchangeable with the host office, except for items that are applicable only to RST control and associated peripheral equipment. This does not preclude the use of existing in-service remote units on a new or upgraded host central office of the latest series generic or release.

(2) *Span line.* The RST is to be connected to the host central office via a means compatible with T1 type span lines using a DS-1 interface. This connection will be for control supervision and subscriber communication. The RUS equipment specification for a span line is PE-60.

(3) *Switching.* (i) The RST may have its switching functions controlled either by the host central office stored program control processors or by local subordinate processors which communicate with the host office processors.

(ii) As long as the connecting span line is intact, the subscribers served by the RST shall have all features, traffic capacity, and services including busy verification, available to all other subscribers in the system.

(iii) The RST shall have available an emergency call processing option which permits calling among all subscribers and from subscribers to emergency numbers within the RST if control link connections to the host central office are severed or otherwise disabled. The RST shall be capable of rerouting normally used emergency numbers, such as 911, to predetermined line terminations in this emergency standalone operating condition. This RST emergency call processing option shall be provided only when specified by the owner in Item 6.1 of appendix B of this section.

(4) *Subscriber line test.* (i) Means shall be available on an optional basis to the maintenance personnel to make subscriber line tests from a common location for all subscriber lines including the RST.

(ii) If tests in paragraph (w)(4)(i) of this section are not requested by the owner for a particular installation, a subscriber loop test set (see paragraph (o)(2)(iii)(A) of this section) shall be supplied at the RST with a means to access all lines.

(5) *Housing.* When housed in a building supplied by the owner, a complete floor plan including ceiling height, power outlets, cable entrances, equipment entry and travel, type of construction, and other pertinent dimensions shall be supplied with this section.

(6) *Power*—(i) *Chargers.* A single charger meeting the requirements of paragraph (s)(3) of this section (with the exception of paragraph (s)(3)(viii) of this section) is required. An additional charger capable of carrying the full load or a combination of three chargers each capable of carrying half the load shall be supplied if redundant chargers are specified in appendix B of this section.

(ii) *Ringing equipment provisioning.* (A) Ringing sources shall be supplied in duplicate.

(B) An exception to the duplicated ringing source requirement permits nonduplicated ringing source(s) to be utilized where there is full compliance with the following service criteria.

(*1*) In a remote switching terminal (RST) of 400 or more equipped lines, a single nonduplicated ringing source failure shall not cause the complete loss of ringing capability to more than 100 lines.

(*2*) In a remote switching terminal (RST) of less than 400 equipped lines, a single nonredundant ringing source failure shall not cause the complete loss of ringing capability to more than 25 percent of the total equipped lines.

(iii) *Power converter.* (A) Power converters required for the purpose of providing various operating voltages to printed circuit boards or similar equipment employing electronic components shall be provided in duplicate with each unit capable of immediately assuming the full operating load upon failure of a unit.

(B) An exception to the duplicate power converter requirement permits nonduplicated power converter(s) to be utilized where there is full compliance with the following criteria.

(*1*) The failure of any single nonduplicated power converter shall not reduce the grade of service of common control and service circuits to any individual line or trunk by more than 50 percent.

(*2*) The failure of any single nonduplicated power converter shall not reduce the traffic carrying capacity of any trunk group or service links to a host office by more than 50 percent.

(*3*) In a remote switching terminal (RST) of 400 or more equipped lines, any single nonduplicated power converter failure shall not cause a complete loss of service to more than 100 equipped lines.

(*4*) In a remote switching terminal (RST) of less than 400 equipped lines, any single nonduplicated power converter failure shall not cause a complete loss of service to more than 25 percent of the total equipped lines.

(*7*) *Alarm.* Sufficient system alarm points shall be provided from the RST to report conditions to the host alarm system.

(x) *Responsibilities of the bidder*—(1) *Central office layout.* (i) The successful bidder shall furnish tentative floor plan layout drawings showing the arrangement of the equipment and the dimensions of major equipment units. These drawings shall include minimum door dimensions and ceiling heights required for installation, maintenance and ventilation. If requested by the owner, the floor plan shall be such that the battery, charger, power board, main distributing frame and wire chief's test equipment are isolated from the other equipment by a partition.

(ii) The layout drawings shall also show provision for the ultimate capacity of the central office as specified by the owner.

(iii) After approval by the owner of the tentative floor plan, and within 10 calendar days after approval of the contract by the Administrator, the owner shall furnish the bidder the necessary data on the actual floor plan. Within 20 calendar days after receiving the necessary building data, the bidder shall then supply floor plan drawings showing exact locations of all equipment, both initial and ultimate, including points where connection to commercial power are required, with voltage and wattage indicated at each point. Within 20 calendar days after receiving the floor plan drawings from the bidder, the owner shall approve these drawings or take the necessary steps to have the drawings changed to meet his approval. The layout planning must be so coordinated between the owner and the bidder as not to delay the scheduled equipment installation date.

(2) *Shipment of main distributing frame (MDF).* The bidder shall ship the MDF equipment, with all necessary instructions to permit its installation by the owner, at the time requested by the owner in writing, provided such time is not earlier than 90 days prior to the date specified for the shipment of the rest of the central office equipment. If the owner or the owner's agent installs the main distributing frame, the owner shall assume the responsibility and the expense of proper installation according to information furnished by the bidder.

(3) *Drawings and printed material.* (i) The bidder shall supply instructional material for each exchange involved at the time of delivery of the equipment. It is not the intent of this section to require system documentation necessary for the repair of individual circuit boards. The bidder shall supply three complete sets of legible drawings, each set to include all of the following drawings and documentation:

(A) A floor plan showing exact dimensions and location of each equipment frame or item to a convenient scale;

(B) A block schematic drawing showing the various equipment components in the system, and their identifying circuit number (e.g., MDF, line circuits, memory, trunks, etc.);

(C) Drawings of major equipment items such as frames, with the location of major component items of equipment shown;

(D) Individual functional drawings for electrical circuits in the system;

(E) A detailed description of the operation of each circuit down to a circuit package level;

(F) Wiring diagrams indicating the specific method of wiring used on each item of equipment and interconnection wiring between items of equipment;

(G) Sufficient software documentation to maintain and service the system, including drawings showing principal aspects of the software architecture;

(H) Individual maintenance drawings covering each equipment item that contains replaceable parts, appropriately identifying each part by name and part number, or, complete ordering instructions for all replaceable parts if individual item drawings are not provided; and

(I) Job drawings including all drawings that are individual to the particular office involved, such as main frame, power panel, test board, etc.

(ii) The following information shall also be furnished:

(A) Complete index of the required drawings;

(B) Explanation of electrical principles of operation of the overall switching system;

(C) List of tests which can be performed with each piece of test equipment furnished, and explanation of the method of performing each test;

(D) Sample of each form recommended for use in keeping records of tests;

(E) Criteria for analyzing results of tests and determining appropriate corrective action;

(F) General notes on the methods of isolating equipment faults to specific printed circuit cards in the equipment;

(G) List of typical troubles which might be encountered, together with general indications as to the probable location of each trouble;

(H) Special office grounding requirements;

(I) A site specific central office ground system acceptance checklist that is consistent with industry practice; and

(J) A site specific layout of the master ground bar (MGB) showing assignment of P, A, N, and I equipment areas.

(4) *Distributing frame wire.* The bidder shall provide sufficient tinned copper conductor distributing frame wire for the initial installation. The insulation of this wire shall be such that it will not support combustion. The insulation shall have good abrasion resistance and cut-through properties, exhibit good solder heat resistance, and be suitable for wire wrap connections or insulation displacement connections.

(5) *Technical assistance service.* A technical assistance service shall be made available to assist the owner and its maintenance personnel on a 24-hour, 7 days a week basis. There is to be assistance available for both hardware and software problems. The necessary interface devices shall be supplied by the bidder.

(6) *Spare parts.* (i) The spare parts bid price shall be based upon the required quantities of spares shown in Item 6.2 of appendix C of this section, and shall be added to the base bid for comparison purposes in awarding the bid. It is the supplier's responsibility to provide all spares required by this section. If the supplier neglects to list certain spare parts in Item 6.2 of appendix C of this section, but they are necessary to comply with this section, they shall be provided by the supplier at no additional cost to the owner.

(A) ''Units'' are defined as user replaceable components used in the central office equipment. ''Spare Parts'' are direct replacements for units. Spare parts are necessary for the maintenance and diagnostic operations where the suspected faulty unit may be removed and a spare part substituted in anticipation that the trouble will be cleared.

(B) Examples of units for which spare parts should be furnished are printed circuit cards; circuit pack assemblies; fuses; and power supplies.

(C) Spare parts are not required as part of this addendum for items such as connectorized cables, nuts, bolts, and similar hardware; nor for items which can be obtained from sources other than the bidder such as battery cells, chargers, powerboards, magnetic tape transport assemblies, disk drives, ringing machines, recorded announcement machines, loop extenders and voice frequency repeaters, fire bars, teletypewriters, and video monitors.

(D) When 100 or more like units are used in the hosts and RST's to be bid, the quantity of spares to be furnished is determined by multiplying the total number of like units in the contract by .05 or .03, as applicable, and rounding off to the next lowest integer. For example, 119 Class 1 units require five spares; 120 require six.

(E) When alternates are required, the price of the spare parts for the alternates shall be included with the price of the alternate.

(F) For equipment in which the line cards consist of a number of plug-in ''daughter'' boards on a ''mother'' board, the line card is defined as the ''daughter'' board unit. In a similar manner for those designs which have line cards backed up by a ''control card,'' the ''control card'' is not, by definition, a line card.

(G) The quantities of spare parts determined in paragraph (x)(6)(vi) of this section are a minimum quantity. The bidder may add quantities of spare parts to bring the number of spare parts up to the bidder's list of spare parts necessary for proper operation in the field.

(ii) A Class 1 unit does not have automatic transfer to a redundant or standby pool of identical units, and provides any function for 24 or more lines or trunks or for all trunks in a group. Nonredundant digital trunk interfaces are included in this category.

(iii) A Class 2 unit has automatic transfer to a redundant or standby pool of identical units, and provides any function for 24 or more lines or trunks or for all trunks in a group. Redundant digital trunk interfaces and units of a redundant stored program processor are included in this category.

(iv) A Class 3 unit does not have automatic transfer to a redundant or standby pool of identical units and provides any function for no more than 23 lines or trunks or for less than all trunks in a group. Nonredundant analog trunks are included in this category. Excluded from this category are line cards, which are in Class 4.

(v) A Class 4 unit has automatic transfer to a redundant or standby pool of identical units and provides any function for no more than 23 lines or trunks or for less than all trunks in a group. Also, any line cards are in Class 4.

(vi) The spare parts for all of the hosts and the RST's included in this contract shall be provided as follows:

Quantity of Units used in the CO's & RST's To Be Bid	Required Quantity of Spares By Class of Unit			
Class ——>	1	2	3	4
1 through 9	1	1	0	0
10 through 24	2	2	1	0
25 through 49	3	2	2	0
50 through 99	4	3	2	0
100 or More	5%	3%	3%	0

(vii) As a part of the response to the bid, the supplier shall furnish a list of units used by class and a list of spare parts to be furnished with this contract. This list shall be placed in Item 6.2 of appendix C of this section for only one of the host specifications included in the entire contract.

(7) *Environmental requirements.* The bidder shall specify the environmental conditions necessary for safe storage and satisfactory operation of the equipment being bid. If requested, the bidder shall assist the owner in planning how to provide the necessary environment for the equipment.

(8) *Unit costs for cost separation purposes.* The successful bidder shall present a cost breakdown of the central office equipment on a discrete element basis 90 days after installation completion. This shall include the various frames, switching and transmission components, and software.

(9) *Single-point grounding system acceptance.* Qualified representatives of the central office system supplier and the owner are to conduct a thorough joint acceptance audit of the grounding system prior to the central office being placed into service. A grounding system acceptance checklist provided by RUS, which is consistent with standard industry practice, will be used in conducting this audit. All required grounding system corrections are to be made prior to placing the central office system into full service operation. The successful completion of this grounding system audit will constitute an acceptance on the part of both parties, the owner and the central office supplier (refer to paragraph (y)(5) of this

section, and appendix D of this section).

(y) *Installation.* The following responsibilities apply to the central office equipment installation and Remote Switching Terminal (RST) installations, unless otherwise noted.

(1) *Responsibilities of owner.* The owner shall:

(i) Allow the bidder and its employees free access to the premises and facilities at all hours during the progress of the installation;

(ii) Take such action as necessary to ensure that the premises are dry and free from dust and in such condition as not to be hazardous to the installation personnel or the material to be installed (not required for an RST installed in a self-contained environmentally controlled cabinet);

(iii) Provide heat or air conditioning when required and general illumination in rooms in which work is to be performed or materials stored (not required for an RST installed in a self-contained environmentally controlled cabinet);

(iv) Provide suitable openings in buildings to allow material to be placed in position (not required for an RST installed in a self-contained environmentally controlled cabinet);

(v) Provide the necessary conduit and commercial and dc-ac inverter output power to the locations shown on the approved floor plan drawings; provide 120 volts, 60 Hz commercial power equipped with a secondary arrester and a reasonable number of outlets for test, maintenance and installation equipment; provide suitable openings or channels and ducts for cables and conductors, from floor to floor and from room to room; provide an acceptable central office grounding system and at a ground resistance level that is reasonable for office site conditions (not required for an RST installed in a self-contained environmentally controlled cabinet);

(vi) Provide the necessary wiring, central office grade ground and commercial power service, with a secondary arrester, to the location of an exterior RST installation based on the voltage and load requirements furnished by the bidder;

(vii) Test at the owner's own expense all lines and trunks for continuity, leakage and loop resistance and ensure that all lines and trunks are suitable for operation with the central office equipment specified;

(viii) Make alterations and repairs to buildings necessary for proper installation of material, except to repair damage for which the bidder or its employees are responsible;

(ix) Connect outside cable pairs on the distributing frame and run all line and trunk jumpers (those connected to protectors);

(x) Furnish all trunk, line, and party assignment information to permit the bidder to program the data base memory within a reasonable time prior to final testing;

(xi) Release for the bidder's use such portions of the existing plant as are necessary for the proper completion of such tests as require coordination with existing facilities including facilities for T1 span lines with properly installed repeaters between the central office and the RST installations;

(xii) Make prompt inspections as it deems necessary when notified by the bidder that the equipment, or any part of the equipment, is ready for acceptance;

(xiii) Provide and install adequate fire protection apparatus, including one or more fire extinguishers or fire extinguishing systems of the gaseous type that has low toxicity and effect on equipment; and

(xiv) Provide necessary access ports for cable, if underfloor cable is selected.

(2) *Responsibilities of bidder.* The bidder shall:

(i) Allow the owner and its representatives access to all parts of the buildings at all times during the installation;

(ii) Obtain the owner's permission before cutting into or through any part of the building structure such as girders, beams, concrete or tile floors, partitions or ceilings (not applicable to the installation of lag screws, expansion bolts, and similar devices used for fastening equipment to floors, columns, walls and ceilings);

(iii) Be responsible for reporting to the owner any damage to the building

which may exist or may occur during its occupancy of the building, repairing all damage to the building due to carelessness of the bidder's workforce, and exercising reasonable care to avoid any damage to the owner's property;

(iv) Consult with the owner before cutting into or through any part of the building structure where the fireproofing or moisture proofing may be impaired;

(v) Take necessary steps to ensure that all fire fighting apparatus is accessible at all times and all flammable materials are kept in suitable places outside the building;

(vi) Not use gasoline, benzene, alcohol, naphtha, carbon tetrachloride or turpentine for cleaning any part of the equipment;

(vii) Install the equipment in accordance with the specifications for the office;

(viii) Run all jumpers, except line and trunk jumpers (those connected to protectors);

(ix) Establish and update all data base memories with subscriber and trunk information as supplied by the owner until an agreed turnover time;

(x) Give the owner notice of completion of the installation at least 1 week prior to completion;

(xi) Permit the owner or its representative to conduct tests and inspections after installation has been completed in order that the owner may be assured that the requirements for installation are met;

(xii) Allow access, before turnover, by the owner or its representative, upon request, to the test equipment which is to be turned over as a part of the office equipment, to permit the checking of the circuit features which are being tested and to permit the checking of the amount of connected equipment to which the test circuits have access;

(xiii) Make final charger adjustments using the manufacturer's recommended procedure;

(xiv) Notify the owner promptly of the completion of work of the central office, or such portions as are ready for inspection;

(xv) Correct promptly all defects for which the bidder is responsible;

(xvi) Provide the owner with one set of marked prints, or strapping prints, showing which of the various options and figures are in use on each switching system as specified in paragraph (x)(3)(i) of this section;

(xvii) Place the battery in service in compliance with the recommendations of the battery manufacturer; and

(xviii) Furnish the owner with a record of the cell voltages and specific gravity readings made at the completion of the installation of the switching system and before it is placed in commercial service.

(3) *Installation requirements.* (i) All work shall be done in a neat, workmanlike manner. Equipment frames or cabinets shall be correctly located, carefully aligned, anchored and firmly braced. Cables shall be carefully laid with sufficient radius of curvature and protected at corners and bends to ensure against damage from handling or vibration. Exterior cabinet installations for RST's shall be made in a permanent, eye-pleasing manner.

(ii) All multiple and associated wiring shall be continuous, free from crosses, reverses and grounds and shall be correctly wired at all points.

(iii) An inspection shall be made by the owner or its representatives prior to performing operational and performance tests on the equipment. However, this inspection shall be made after all installing operations which might disturb apparatus adjustments have been completed. The inspection shall be of such character and extent as to disclose with reasonable certainty any unsatisfactory condition of apparatus or equipment. During these inspections, or inspections for apparatus adjustments, or soldering, or in testing of equipment, a sufficiently detailed examination shall be made throughout the portion of the equipment within which such condition is observed, or is likely to occur, to disclose the full extent of its existence, where any of the following conditions are observed:

(A) Apparatus or equipment units failing to compare in quantity and code with that specified for the installation;

(B) Apparatus or equipment units damaged or incomplete;

(C) Apparatus or equipment affected by rust, corrosion or marred finish; or

(D) Other adverse conditions resulting from failure to meet generally accepted standards of good workmanship.

(4) *Operational test requirements.* (i) Operational tests shall be performed on all circuits and circuit components to ensure their proper functioning in accordance with appropriate applicable documents supplied by the bidder.

(ii) A sufficient quantity of overall tests shall be made to ensure proper operation of all specified features.

(iii) A sufficient quantity of locally originating and incoming calls shall be made to prove the switching system can accept and process calls to completion.

(5) *Grounding system audit.* (i) A grounding system audit shall be performed to ensure that a viable single-point grounding system is in place prior to the time the switching system is placed into full service operation. It is suggested that such an audit be conducted at the time the switching system is ready for turnover to the owner.

(ii) This single-point grounding system audit is to be conducted by authorized representatives of the supplier and owner, and with the RUS general field representative participating at his discretion.

(iii) The single-point grounding system audit is to be conducted using the checklist contained in appendix D of this section.

(iv) Appendix D of this section shall be the principal single-point grounding system audit guideline document. A supplemental checklist may be prepared and provided by the switching system supplier which recognizes unique grounding requirements related to their particular switching system. The scope of this supplier checklist is to be confined to unique and specific switching system requirements only. Acceptable supplier supplemental grounding checklist must have prior approval of and be on file with the Central Office Equipment Branch of the Telecommunications Standards Division of RUS.

(v) It is the responsibility of the central office supplier to ensure that the grounding system evaluation criteria contained in the combination of the appendix D checklist of this section and their optional supplemental checklist adequately fulfill requirements for warranty coverage.

(vi) All deficiencies in the single-point grounding system are to be corrected prior to the switching system being placed into full service operation. Exceptions are permitted only by mutual agreement of the owner and supplier and with written approval of the RUS general field representative.

(vii) The acceptance statement facesheet of the audit checklist in appendix D of this section shall be signed by authorized representatives of the supplier and owner to indicate mutual approval of the single-point grounding system. Copies of all completed grounding system audit documents are to be provided to the supplier, owner and appropriate RUS telephone program regional offices.

(The information and recordkeeping requirements of this section have been approved by the Office of Management and Budget (OMB) under the control number 0572–0059)

APPENDIX A TO 7 CFR 1755.522—SPECIFICATION FOR DIGITAL, STORED PROGRAM CONTROLLED CENTRAL OFFICE EQUIPMENT DETAILED REQUIREMENTS (HOST)

(Information To Be Supplied by Owner)

Telephone Company Name

_____

Location

_____

Central Office Name (By Location)

Town _____

County _____

State _____

_____ Attended

_____ Unattended

_____ Remotes

1. General

1.1 Notwithstanding the bidder's equipment lists, the equipment and materials furnished by the bidder must meet the requirements of paragraphs (a) through (x), Appendix A and Appendix B of § 1755.522.

1.2 Paragraphs (a) through (x) of § 1755.522 cover the minimum general requirements for digital, stored program controlled central office switching equipment.

1.3 Paragraph (y) of § 1755.522 covers requirements for installation, inspection, and testing when such service is included as part of the contract.

1.4 Appendices A and B of § 1755.522 cover the technical data for application engineering and detailed equipment requirements insofar as they can be established by the owner. These appendices are to be filled in by the owner.

1.5 Appendix C of § 1755.522 covers detailed information on the switching network equipment and the common control equipment, and information as to system reliability and heavy traffic delays as proposed by the bidder. This appendix is to be filled in by the bidder and must be presented with the bid.

1.6 Appendix D of § 1755.522 is the single-point grounding system audit checklist.

2. Numbering Scheme

2.1 This office shall be arranged to serve the following area and office code(s):

_____

_____

_____

_____

If more than one code is to be served, discrimination shall be determined by the following:

Number Translation ____
Separate Trunk Groups ____
Both (Explain in Item 16, Appendix A) ____

2.2 This office shall be arranged to provide EAS service to the following:

Connecting office	Code	Connecting office	Code

2.2.1 Seven digits shall be dialed for all local and EAS calls.

2.3 Additional dialing procedures to be provided include the following:

Feature	Required
Station Paid Toll (Including Coin):	
Home Numbering Plan Area (HNPA):	
''1'' + 7 Digits	_____
''1'' + 10 Digits	_____
Other (Explain in Item 16, Appendix A)	_____
Foreign Numbering Plan Area (FNPA):	
''1'' + 10 Digits	_____
Other (Explain in Item 16, Appendix A)	_____

10XXX Dialing to Interexchange Carriers:

Name	Access code

Feature	Required
Person, Special (Including Coin):	
HNPA—''0'' + 7 Digits	
''0'' + 10 Digits	
FNPA ''0'' + 10 Digits	
Other (Explain in Item 16, Appendix A)	
Directory Assistance:	
HNPA Local—411	
''1'' + 411	
HNPA Toll ''1'' + 555–1212	
FNPA Toll ''1'' + NPA + 555–1212	
IDDD:	
Operator Serviced 01	
Station-Station 011	

Other service codes	No. to be dialed
Wire Chief	
Repair Service	
Business Office	
Emergency Calls to 911 Lines	
Emergency Calls to 911 Trunks	
Time	
Weather	
100 Test Line	
102 Test Line	
105 Test Line	
Other (Explain in Item 16, Appendix A)	

2.4 Assistance calls are answered: (Check appropriate items)

2.4.1 At the operator office in _____

2.4.1.1 By means of the regular interoffice toll trunks _____

2.4.1.2 By means of the regular interoffice EAS trunks _____

2.4.1.3 By means of a separate special service trunk group _____

2.4.1.4 Locally _____

Explain:

3. Office Clock

3.1 This office is to be slave clock synchronized with another office:

_____ Yes _____ No

(Explain details in Appendix A, Item 16 if ''Yes''.)

3.2 This office is to be a master clock office to provide synchronization timing for other offices:

_____ Yes _____ No

(Explain details in Appendix A, Item 16 if ''Yes''.)

4. Interoffice Trunking Diagram

4.1 A sketch showing relative location of exchanges, RST's, and number of circuits shall be included, also the office and area codes of the direct trunk points. The diagram should indicate whether toll or EAS trunk groups are ''High Usage'' or ''Final.'' Alternate routes should be included. Indicate whether the trunk termination is direct digital or analog.

5. Translator Function Chart

Called point	Subscriber dials	First route			Alternate routes		
		Translator action	Send		Translator action	Send	
		Deletes	Prefixes		Deletes	Prefixes	

6. Line Circuit Requirements (Includes all lines associated with RST's.)

6.1 *Types of Lines*

	No. of lines		No. of EAS areas	Total No. of lines required
	Local service only	both local and EAS service		
6.1.1 Individual—Flat Rate	_____	_____	_____	_____
6.1.2 Individual—Message Rate	_____	_____	_____	_____
6.1.3 Pay Station	_____	_____	_____	_____
6.1.4 Telephone Company Official Lines	_____	_____	_____	_____
6.1.5 Wire Chief	_____	_____	_____	_____
6.1.6 911 Emergency Service Bureau Lines	_____	_____	_____	_____
6.1.7 Number Hunting PBX Groups:	_____	_____	_____	_____

No. of lines in group	No. of groups	Direct in dial*	Restricted service at COE	Type		No. of lines		No. of EAS areas	Total No. of lines required
				Ground start	Loop start	Local service only	Both local and EAS service		
_____	_____	_____	_____	_____	_____	_____	_____	_____	_____
_____	_____	_____	_____	_____	_____	_____	_____	_____	_____
_____	_____	_____	_____	_____	_____	_____	_____	_____	_____
_____	_____	_____	_____	_____	_____	_____	_____	_____	_____
_____	_____	_____	_____	_____	_____	_____	_____	_____	_____

*Furnish translation information under Item 5.

6.1.8 WATS Lines (Give details in Appendix A, Item 16)
Number of Inward WATS Lines _____
Number of Outward WATS Lines _____
6.1.9 Special Lines Required _____ (Explain in Item 16, Appendix A)
6.1.10 Total Number of Lines Required
Host _____ (Incl. DDI Concentrator Lines)
RST 1 _____
RST 2 _____
RST 3 _____
Total _____
6.1.11 Total Director Numbers Required _____
(Including RST's) (see Item 7.1, Appendix A)
6.1.12 Pay Station
Type _____
New ___ Reused ___
(Describe in Item 16, Appendix A)
6.1.13 Line Concentrator
6.1.13.1 Supplied by Owner (see Item 16, Appendix A, for details)
___ Yes ___ No
6.1.13.2 Supplied by Bidder (If ''Yes'', attach REA Form 397g, Performance Specification for Line Concentrators)
___ Yes ___ No
6.2. *Data on Lines Required Range Extension*
6.2.1 Number of non-pay station lines having a loop resistance, including the telephone set, as follows:

	No. of lines
1901–3200 ohms	_____
3201–3600 ohms	_____

6.2.2 Number of pay station lines having loop resistance, excluding the telephone set, greater than:

	No. of lines
1200 ohms (For Prepay)	_____
1000 ohms (For Semi-Postpay Operation).	_____

6.2.3 Range extension equipment is to be provided:
6.2.3.1 Loop Extenders: Total Quantity _____
By Bidder—Quantity _____
By Owner—Quantity _____
(Explain in Item 16, Appendix A)
6.2.3.2 VF Repeaters: Total Quantity _____
By Bidder—Quantity _____
(Bidder must have information on loading and cable size.)
By Owner—Quantity _____
(Explain in Item 16, Appendix A)
6.2.3.3 Range extension may be furnished as an extended range line circuit at the option of the supplier. If this option is used, the quantities of loop extenders and VF repeaters will be different from the quantities listed above (see Item 6.1,a, Appendix C).
___ Yes ___ No
7. Traffic Data-Line Originating and Terminating Traffic
7.1 Originating Line Traffic—Estimated per Busy Hour (Includes all Lines Associated With RST's):

	(a) CCS per Main Station	(b) No. of Main Stations	(axb) Total CCS	No. of Lines Required [1]
Ind.—Res	_____	_____	_____	_____
Ind.—Bus	_____	_____	_____	_____
Special Lines	_____	_____	_____	_____
Pay Station	_____	_____	_____	_____
Telco Official	_____	_____	_____	_____
Wire Chief	_____	_____	_____	_____
No. Htg. or PBX	_____(2)	_____(3)	_____	_____
WATS	_____	_____	_____	_____
Data Service	_____	_____	_____	_____
911 Emerg. Service	_____	_____	_____	_____
Total		_____	_____	_____(4)
		(c)	(d)	(e)

[1] See Appendix A, Item 6.1.
[2] This figure is the CCS per PBX trunk.
[3] This figure is the number of PBX trunks.
[4] This is the total number of line equipments required. The number to be provided will be determined by the equipment design of the system of the selected bidder. See Appendix C, Item 3.1.1.2.

7.2 Average Originating CCS per Line per Busy Hour

(d)/(e)=____/ ____=____ CCS/Line

This office shall be engineered to handle an initial average originating busy hour traffic of ____ CCS per line. It is anticipated that the average originating busy hour traffic will increase to ____ CCS per line.

Originating Traffic Attributed to Host Only ____ CCS/Line

7.3 Terminating Traffic—Estimated CCS per Busy Hour

It is assumed that the total CCS for terminating traffic is the same as for originating traffic. Since digital switch networks are on a terminal per line basis, the terminating CCS per line will be the same as the originating CCS per line as shown in Item 7.2, Appendix A.

Terminating Traffic Attributed to Host Only ____ CCS/Line

7.4 Percent of Pushbutton Lines ____

7.5 Anticipated Ultimate Capacity (20 years)

7.5.1 Subscriber Lines

Host _____ (Incl. DDI Concentrator Lines)

RST 1 _____

RST 2 _____

RST 3 _____

Total _____

8. Trunk Circuit Requirements

8.1 *Interoffice Trunking*

8.1.1 Trunking Requirements

1. Connecting Office				
2. Use of Trunk				
3. Trk. Grp. Ntwk. Connection [1]				
4. Quantity Equipped				
5. Ultimate % Growth				
6. CCS Capacity				
7. Direction				
8. No. Digits Dialed				
9. No. Digits Outpulsed				
10. No. Digits Inpulsed				
11. Type Signaling				
12. Type Pulsing				
13. Carrier Type (2-Wire)				
14. Carrier Type (4-Wire)				
15. Physical				
16. Repeat Coils [2]				
17. DX Signaling Set				
18. Other Type Signaling				
19. Delay Dial				
20. Direct Digital Interface				
21. a. Feature Group B				
b. Feature Group C				
c. Feature Group D				

[1] Designation of trunk group network connection involves the following categories:
IC—Direct Inter-LATA Connecting Trunk=(IC/POP)
TC—Tandem Connecting Trunks
IT—Intertandem Connecting Trunks
IL—Intra-LATA Connecting Trunks
TIC—Tandem Inter-LATA Connecting Trunks
Misc.—Intercept, Busy Verification, etc.

[2] Omit repeating coils for carrier derived trunks.

8.1.2 Pads for 4-Wire Carrier (7dB and 16dB)

Total Quantity _____
By Bidder Quantity _____
By Owner Quantity _____

Refer to the attached information regarding connecting company trunk circuit drawing numbers and name of manufacturer.

8.2 *Switched Traffic Data*

8.2.1 Originating Traffic

Type	CCS	H.T. secs.	BHC	No. of digits out-pulsed	Sender sig. mode	Remarks
Toll "0"−[1]						
Toll "0"+7[1 2]						
Toll "0"+10[1 2]						
Toll S–S "1"+7[2]						
Toll S–S "1"+10[2]						
Toll Other						
Special Service						
Intercept						
Intraoffice				XXXXXXX	XXXXXXX	
EAS						
EAS						
EAS						
Tandem						
Tandem						
Tandem						
911 Emerg. Service						
Total						

[1] PPCS traffic assumed to be divided 20 percent "0"− and 80 percent "0"+ if unknown.
[2] Toll calls assumed to be divided two-thirds 7 digits and one-third 10 digits.

Busy Hour Attempts=BHC Total × 1.4=____

8.2.2 Terminating Traffic

Type	CCS	H.T. secs.	BHC	No. of digits inpulsed	Receiver sig. mode	Remarks
Toll Compl.						
Test & Ver.						
Intraoffice						
EAS						
EAS						
EAS						
Tandem						
Tandem						
Tandem						
Total						

9. Checklist of Features Required

9.1 *Alternate Routing* ....
(Explain in Item 16, Appendix A)

9.2 *Data Service* ....
(Explain in Item 16, Appendix A)

9.3 This office shall be:

9.3.1 End Office Only ....

9.3.2 End Office and Intermediate Tandem ....
(Explain in Item 16, Appendix A)

9.3.3 End Office and Access Tandem ... .
(Explain in Item 16, Appendix A)

9.4 Billing Data

	Trunk group	Send ANI feature group			Store billing data	
		B	C	D	AMA system	Pollable system
9.4.1 This office only						
9.4.2 Trunks from Tributaries						
9.4.3 Local Message Detail Recording:						

9.5 *Pollable Systems*

9.5.1 Polling device to be provided on this contract

____ Required
____ Not Required
(Provide details in Item 16, Appendix A)

9.5.2 Pollable system to be backed up by tape or disc standby
____ Required
____ Not Required

9.6 *AMA Format*

9.6.1 Bellcore Format
____ Required
____ Not Required
(Provide details in Item 16, Appendix A)

10. Miscellaneous Operating Features

10.1 *Busy Verification*
10.1.1 By dedicated trunk from toll operator: ____
10.1.1.1 One-Way, Inward ____
10.1.1.2 Two-Way (Busy verification inward, intercept outward) ____
10.1.2 By prefix digit over intertoll trunk ____

(Indicate digit(s) dialed) ____
10.1.3 Access by Switchman
10.1.3.1 Dedicated Trunk ____
10.1.3.2 Multiple of Operator Trunk ____
10.2 *Intercept Facilities*
10.2.1 Vacant code, disconnected number, and unassigned number intercept shall be: (Check One)
By recorded announcement:
Without cut-through to operator ____
With cut-through to operator ____
By operator ____
10.2.2 Changed number intercept shall be: (Check One)
By recorded announcement:
Without cut-through to operator ____
With cut-through to operator ____
By operator ____
By automatic intercept system (AIS) in distant office ____
10.2.3 Method of Reaching Operator, if required:
Separate trunk group ____
Regular interoffice toll trunks with idle trunk selecting over at least three trunks when three or more toll trunks are equipped ____
10.2.4 Number of separate intercept trunk circuits ____
10.3 *Line Load Control*
10.3.1 Line load control facilities are:
____ Required ____ Not Required
(Explain in Item 16, Appendix A)
10.4 *Service Observing Facilities*
10.4.1 Service observing facilities are:
____ Required ____ Not Required
(Explain in Item 16, Appendix A)
10.5 *Hotel-Motel Arrangements*
10.5.1 Hotel-motel arrangements for operation of message registers at the subscriber's premises are:
____ Required ____ Not Required
(Explain in Item 16, Appendix A)
10.5.1.1 How are message registers to be activated?
Line Reversal ____
Third Wire ____
Other ____
(Explain in Item 16, Appendix A)
10.6 *Nailed-Up Connections*
____ Required ____ Not Required
(Explain in Item 16, Appendix A)
10.7 *Vertical Services:* (RST Lines are Included)

	Initially	*Ultimate*
10.7.1 Call Waiting—No. of Lines	_____	_____
10.7.2 Call Forwarding—No. of Lines	_____	_____
____ Local ____ Remote		
(Explain in Item 16, Appendix A).		
10.7.3 Abbreviated Dialing No. of Lines	_____	_____
No. of Codes per Line ____ for ____ Lines		
No. of Codes per Line ____ for ____ Lines		
10.7.4 Three-Way Calling—No. of Lines	_____	_____
CCS Per Line	_____	_____

10.7.5 Other ____
(Explain in Item 16, Appendix A)

11. Maintenance Facility Requirements
11.1 *Alarm Signals*
11.1.1 Handled locally ____
Explain in Detail: _____
_____
_____

11.1.2 Transmitted to attended point
11.1.2.1 Via operator office trunks ____
11.1.2.2 Via printout or other display service ____
Explain in Detail: _____
_____

_____
11.1.2.3 Type of tone to operator
11.1.2.3.1 Distinctive tone (see (i)(2)(ix) of § 1755.522) ____
11.1.2.3.2 Other
Explain in Detail: _____
_____
_____

11.1.3 Alarm checking signals for carrier and mobile radio systems

11.1.3.1 Minor Alarm ....
11.1.3.2 Major Alarm ....

11.1.3.3 Terminals for both ....
11.2 *Trouble Location and Test*
11.2.1 Outside plant and stations (check desired items)
11.2.1.1 Subscriber's loop test circuit:
11.2.1.1.1 As part of the maintenance center ....
11.2.1.1.2 Separately ....
11.2.1.2 Remote test set (Explain in Item 16, Appendix A) ....
11.2.1.3 Dial speed test circuit (Explain in Item 16, Appendix A) ....
11.2.1.4 Pushbutton dialing test circuit ....
11.2.1.5 Howler (per (o)(2)(iii)(C) of § 1755.522) ....
11.2.1.6 Hand test sets, number required ____ (Explain in Item 16, Appendix A).

11.3 *Transmission Tests*

11.3.1 Furnish reference tone
Yes ____
No ____

Frequencies and order in which applied	Time interval for application of each frequency
____ Hz	____ Seconds
____ Hz	____ Seconds
____ Hz	____ Seconds
____ Hz	____ Seconds

11.3.2 Test Lines

11.3.2.1 Test Line 100 ____

11.3.2.2 Test Line 102 ____

11.3.2.3 Test Line 104 ____

11.3.2.4 Test Line 105 ____

(Explain in Item 16, Appendix A)

11.3.2.5 Test Line 107 ____

11.3.2.6 Remote Office Test Line ____

(Explain in Item 16, Appendix A)

11.4 *Line Testing*

11.4.1 Automatic line insulation testing

Yes ____
No ____

11.4.2 Owner supplied equipment

Yes ____
No ____

11.4.2.1 Vendor supplied interface only

Yes ____
No ____
If supplied by owner, explain in Item 16, Appendix A, including manufacturer, model, location.

11.5 *Remote Control*

11.5.1 Remote control of the system shall be provided.

Yes ____
No ____

If required, explain in Item 16, Appendix A, including number, type and location.

12. Power Equipment Requirements (Host Office Only)

12.1 *Central Office Battery*

12.1.1 A battery reserve of ____ busy hours shall be provided for this office when it reaches ____ lines at the ultimate anticipated traffic rates specified in Item 7.2, Appendix A.

12.1.1.1 The owner will furnish a standby generator, permanently installed in this office, with capacity sufficient to power air conditioning equipment required for cooling of the central office equipment and to maintain an adequate dc supply in the event of a failure of the commercial ac supply.

Yes ____
No ____

12.1.2 *Type of battery:* (Check One)
Lead Calcium ____
Lead Antimony ____

12.1.3 Voltmeter (portable 3–60–150 volt scale, 1% accuracy) shall be furnished.

Yes ____
No ____

12.1.4 Hydrometer in a hydrometer holder with glass or plastic drop cup shall be furnished.

Yes ____
No ____2112.1.5 Type of battery rack required: (Check One)

Two Tier ____
Other ____
Explain:

12.1.6 Special equipment power requirements (carrier, voice frequency repeaters, etc.). Drain in amperes ____

12.1.6.1 Supply all necessary equipment to provide the following 48-volt battery taps:

Number of circuits	Fuse (or circuit breaker) size
.....	
.....	
.....	
.....	

12.2 *Charging Equipment*

12.2.1 Charging equipment shall be provided capable of charging the office battery on a full float basis when the office reaches ____ lines at the ultimate anticipated traffic rates specified in Item 7.2, Appendix A.

12.2.2 Charger input rating shall be:

	3-Phase Connection:
Voltage ___ Phase ___ Frequency ___	3–Wire ___ 4–Wire ___ Delta ___
.....	Y ___

12.3 *Ringing Equipment*

12.3.1 Solid-state ringing equipment in accordance with paragraph (s)(5)(i) of § 1755.522 shall be provided for generating the frequencies specified by check marks in the following table. Ringing generator sets serving the entire office shall each be sized to carry the full office ringing load when the office size reaches ___ lines at the ultimate anticipated traffic rates specified in Item 7.2, Appendix A.

12.3.2 Ringing frequencies to be supplied:

	Frequency in Hz		Maximum No. of telephones
Single Frequency	20	.....	.....
Decimonic	20	.....	.....
	30	.....	.....
	40	.....	.....
	50	.....	.....
Harmonic	16⅔	.....	.....
	25	.....	.....
	33⅓	.....	.....
	50	.....	.....
Synchromonic	20	.....	.....
	30	.....	.....
	42	.....	.....
	54	.....	.....

12.3.3 Furnish frequency meter (accurate within 1.3 Hz) and voltmeter (5% accuracy) for ringing measurements (see paragraph (s)(7)(ii) of § 1755.522). Check One:

Panel Mounted ___
Portable ___
Not Required ___

12.4 *Power Board*

The power panel and associated wiring shall be of ample size to meet the load requirements when this office reaches ___ lines at the ultimate anticipated traffic rates specified in Item 7.2, Appendix A.

13. Distributing Frame Requirements (Host Office Only)

13.1 Total number of outside plant cable pairs to be terminated ....
13.1.1 Gauge of outside plant cable pairs ....
13.2 Number of outside plant cable pairs to be protected ....
13.3 Number of additional protector pair units to be provided on MDF ....

Explain:

13.4 *Main Frame Details*

Is present MDF to be reused?
Yes ___
No ___
If ''Yes,'' Type ___
Reused protectors are:
___ (Mfgr.)
___ (Type)

13.4.1 Number of pairs of arrester units (switching equipment) ___

13.4.2 Number of pairs of gas tube arrester units (special equipment) ___

13.4.2.1 Gas tubes to be:
___ light,
___ medium,
___ heavy,
___ max. duty units

13.4.2.2 Fail shorted/low breakdown failure mode required
Yes ___
No ___

13.4.2.3 Breakdown voltage of gas tube arresters ___

13.4.3 Number of terminated pairs to be grounded ___

13.4.4 Factory assembled tip cable
Yes ___
No ___

13.4.4.1 Tip cable length [if other than 20 feet (610 cm)]
___

13.4.4.2 Tip cable formed
Up ___
Down ___

13.4.5 Pairs per vertical ___

13.4.6 Height of vertical ___ feet ___ inches

14. Building and Floor Plan Information (Host Office Only)

14.1 Equipment is to be installed in an existing building (Attach detailed plan.) ___

14.2 A new building is planned ___

14.2.1 Tentative plan (*Note to Engineer:* Show sketch without dimensions.)

14.3 *Detailed Arrangements*

14.3.1 Partition required (to isolate space containing battery, charger, power board, test panel, main distributing frame and subscriber's loop test circuit (wire chief's test desk) from that of the remaining equipment).
Yes ___
No ___

14.3.2 Vestibule required
Yes ___
No ___

14.3.3 Cable entrance
Overhead___
Underground ___

14.3.4 Additional floor space will be required for the following equipment which is being furnished by the owner or by the connecting company:

_____
_____
_____

14.3.5 The office will be arranged for
Overhead Interbay Cabling ___

Underfloor (Computer Room Type) Interbay Cabling ____

14.3.6 Is earthquake bracing required?

Yes ____

No ____

(If ''Yes,'' explain zone and criteria used for zone in Item 16, Appendix A.)

14.3.7 Office ground will be ____ ohms or less (Refer to Item 4.6.3 of RUS TE&CM 810.)

14.3.8 The office is considered to be in the following category for lightning damage probability based on the Figure 1 map of RUS TE&CM 823 (see paragraph (u)(2) of 1755.522).

____ Very High

____ Higher than Average

____ Average

____ Lower than Average

____ Very Low

14.3.9 The following is additional information regarding operating environment conditions which should be considered in determining system protection requirements (tower in vicinity, high exposure, etc.):

15. Alternate Requests

16. Explanatory Notes (Include a detailed description of any equipment to be reused, or otherwise supplied by the owner, loop extenders, subscriber carrier, VF repeaters, etc.)

APPENDIX B TO 7 CFR 1755.522—DETAILED INFORMATION ON REMOTE SWITCHING TERMINALS (RST'S)

(Complete One Form For Each RST)

1. Number of Subscriber Lines (These lines included in totals in Item 6, Appendix A).

1.1 Single-Party: _____ Flat Rate _____ Message Rate.

1.2 Semi-Postpay Pay Station _____.

1.3 Prepay Pay Station _____.

1.4 PABX Lines _____ Loop Start_____ Ground Start _____ Restricted at Office _____ Other _____ (Describe in Item 12, Appendix B)

1.5 Number of lines to be pushbutton _____

1.6 911 Emergency Lines _____

1.7 Anticipated ultimate capacity (20–Year) _____

2. Traffic

2.1 Originating traffic per line—CCS/BH: _____ Initial _____ Ultimate.

2.2 Terminating traffic per line—CCS/BH: _____ Initial _____ Ultimate

2.2.1 Terminating will be made equal to originating if it is not known to be different.

3. Subscriber Loop Resistance

3.1 Number of subscriber lines having loop resistance, including the telephone set of:

No. of Lines

1501–1900 Ohms _____

1901–3200 Ohms _____

3.2 Number of pay station lines having loop resistance, excluding the telephone set, greater than:

No. of Lines

1200 Ohms (For Prepay) _____

1000 Ohms (For Semi-Post Pay Operation) _____.

4. Range Extension

4.1 If no standby power is available at the site, loop extenders may be required on 1501 to 1900 ohms loops.

4.2 *Loop extenders:* Total Quantity _____ By Bidder—Quantity _____ By Owner—Quantity

(Explain in Item 12, Appendix B)

4.3 *VF repeaters:* Total Quantity _____ By Bidder—Quantity _____ By Owner—Quantity _____.

(Explain in Item 12, Appendix B)

5. Power Supply

5.1 Power Board.

5.1.1 The power board and associated wiring shall be of ample size to meet the load requirements when this RST reaches _____lines at the ultimate anticipated traffic rates specified in Item 2, Appendix B.

5.2 *Charger input rating shall be:* Voltage _____ Phase _____ Frequency _____

3-Phase Connection:

3-Wire _____

4-Wire _____

Delta _____

Y_____

5.2.1 Charger shall be capable of charging the RST battery on a full float basis when the RST reaches _____ lines at ultimate traffic rate specified in Item 2, Appendix B.

5.2.2 Charger shall be redundant _____.

5.3 Battery reserve shall be _____ busy hours when the RST reaches _____ lines at the ultimate anticipated traffic specified in Item 2, Appendix B.

5.4 Standby power is available. Yes _____ No _____.

5.5 Special equipment power requirements _____ amps.

5.6 *Ringing.*

5.6.1 Type of Ringing.

5.6.2 Frequency

No.	1.	2.	3.	4.
Frequency HZ	.....	.....	.....	.....
Max. No. Phones/ Frequency	.....	.....	.....	.....

5.6.3 Wattage to be sized for _____ lines.

5.6.4 Frequency Meter (see Item 12.3.3, Appendix A). Panel Mounted _____ Not Required _____.

6. Emergency Operation

6.1 If path to central office is opened, the RST shall be able to complete calls between subscribers in its own system: Yes _____ No _____

Further requirements should be listed under Item 12, Appendix B.

7. RST Distribution Frame Requirements

7.1 Total number of outside plant cable pairs to be terminated _____.

7.1.1 Gauge of outside plant cable pairs _____.

7.2 Number of outside plant cable pairs to be protected _____.

7.3 Number of additional protector pair units to be provided on MDF _____.

Explain:

7.4 *Main Frame Details*

7.4.1 Present MDF to be reused Yes_____ No_____.

If ''Yes'', Type _____.

Reused protectors are: _____ (Mfr.) _____ (Type).

7.4.2 Number of pairs of arrester units (switching equipment) _____.

7.4.3 Number of pairs of gas tube arrester units (special equipment) _____.

7.4.3.1 Gas tubes to be: _____ light, _____ medium, _____ heavy, _____ maximum duty units.

7.4.3.2 Fail shorted/low breakdown failure mode required Yes _____ No _____.

7.4.3.3 Breakdown voltage of gas tube arresters _____.

7.4.4 Number of terminated pairs to be grounded _____.

7.4.5 Factory assembled tip cable Yes _____ No _____.

7.4.5.1 Tip cable length [if other than 20 feet (610 cm)] _____.

7.4.5.2 Tip cable formed Up _____ Down _____.

7.4.6 Pairs per vertical _____.

7.4.7 Height of vertical _____ feet _____ inches.

8. Building and Floor Plan Information

8.1 RST to be mounted in building _____.

8.1.1 Earthquake bracing required Yes _____ No _____ (see Item 14.3.6, Appendix A).

8.1.2 Supply building floor plan.

8.2 RST to be mounted in cabinet out of doors _____.

8.2.1 Cabinet to be mounted _____ on pole _____ on ground.

9. Subscriber Line Test

9.1 Remote testing of subscriber lines is required Yes _____ No _____.

9.2 Subscriber loop test set _____.

10. Span Lines to Host Central Office

10.1 To be supplied by Owner _____.

10.2 To be supplied by Bidder _____.

10.2.1 When the bidder is to supply the span lines, an RUS Form 397b, Trunk Carrier Systems, with the applicable parts completed must be attached with a physical layout of the span line.

11. Grounding Considerations

11.1 The RST ground will be _____ ohms or less. (Refer to Item 4.6.3 of RUS TE&CM 810.)

11.2 This RST is considered to be in the following category for lightning damage probability based on the Figure 1 map of RUS TE&CM 823._____ Very High _____ Higher than Average _____ Average _____ Lower than Average _____ Very Low

11.3 The following is additional information regarding operating environment conditions which should be considered in determining system protection requirements (tower in vicinity, high exposure, etc.):

12. Explanatory Notes

APPENDIX C TO 7 CFR 1755.522—SPECIFICATIONS FOR DIGITAL, STORED PROGRAM CONTROLLED CENTRAL OFFICE EQUIPMENT DETAILED REQUIREMENTS—BIDDER SUPPLIED INFORMATION

Telephone Company
Name _____
Location
_____
_____

Central Office Name (By Location)
Town _____
County _____ State _____
_____

Attended _____ Unattended _____

1. General

1.1 The equipment and materials furnished by the bidder must meet the requirements of paragraphs (a) through (x), Appendix A, and Appendix B of § 1755.522.

1.2 Paragraphs (a) through (x) of § 1755.522 cover the minimum general requirements for digital, stored program controlled central office switching equipment.

1.3 Paragraph (y) of § 1755.522 covers requirements for installation, inspection, and testing when such service is included as part of the contract.

1.4 Appendices A and B of § 1755.522 cover the technical data for application engineering and detailed equipment requirements insofar as they can be established by the owner. These appendices are to be filled in by the owner.

1.5 Appendix C of § 1755.522 covers detailed information on the switching network equipment and the stored program controlled

equipment, and information as to system reliability and heavy traffic delays as proposed by the bidder. This appendix is to be filled in by the bidder and must be presented with the bid.

1.6 Appendix D of § 1755.522 is the single-point grounding system audit checklist.

2. Performance Objectives

2.1 *Reliability* (see paragraph (b) of § 1755.522).

_____

_____

_____

_____

2.2 *Busy Hour Load Capacity and Traffic Delay* (see paragraph (e)(10) of § 1755.522. Describe basis for traffic analysis).

_____

_____

_____

_____

3. Equipment Quantities Dependent on System Design

3.1 *Switch Frames and Circuits.*

3.1.1 Number of Lines.

3.1.1.1 The number of lines to be provided shall include the number required for the termination of subscriber lines, Item 7, Appendix A, plus the number required for routine testing plus any additional to meet the minimum switch increment of the selected system.

3.1.1.2 The number of lines provided for this office will be _____

3.1.2 Number of Ports Used for Trunks

3.1.2.1 The number of trunk ports to be provided shall be based on the trunk quantities required (Item 8, Appendix A) as modified by the minimum increment of the selected system. Provision shall be made for at least 5 percent additional inlet and outlet ports over those required initially. The additional ports shall be used for connecting additional trunks that may be required in the future.

3.1.2.2 The number of trunk ports provided for this office will be _____

3.1.3 Number of Subscriber Directory Numbers

3.1.3.1 The number of directory numbers provided shall be based on the total directory numbers required (Item 6.1.11, appendix A), as modified by the memory increment of the proposed system.

3.1.3.2 The number of subscriber directory numbers provided for this office will be _____

4. RST

4.1 Information for RST's must be supplied for each RST to be furnished.

4.2 Number of line terminals for this RST will be _____ .

4.3 Number of span line terminations to the central office being supplied _____ .

4.4 If the emergency operation option is required, it will provide the following service when connection to the main office is severed:

_____

_____

_____

4.5 The ac power drain at the remote end will be:

Initial _____ Ultimate _____

Voltage: Single-Phase _____ Three-Phase _____

4.6 Special environmental requirements for the remote end:

_____

_____

_____

5. Power

5.1 *AC Power Drain Watts*

Initial _____ Ultimate _____

5.2 *Heat Dissipation Watts*

Provide the initial and ultimate equipment dissipation for each equipment room.

5.2.1 Operating Temperature Range

Minimum _____ Maximum _____

5.2.2 Operating Humidity Range

Minimum _____ Maximum _____

6. Additional Information to be Furnished by Bidder

6.1 The bidder shall accompany its bid with the following information:

a. Two copies of the equipment list and the calculations from which the quantities in the equipment list are determined;

b. Two copies of the traffic tables from which the quantities are determined, other than the full availability tables shown in paragraph (p)(1)(i) of § 1755.522;

c. Two copies of detailed switching diagram showing the traffic on each route, the grade of service, the quantity of circuits, and main distributing frames;

d. Block diagram of stored program control and associated maintenance equipment;

e. A prescribed method and criteria for acceptance of the completed central office, which is subject to review;

f. Location of technical assistance service with 24-hour maintenance, and conditions when owner will be charged for access to the service;

g. Calculations showing the method by which ringing machine sizes were derived;

h. Precautions to be taken against static discharge;

i. Details of central office grounding requirements, recognizing local grounding conditions;

j. Details concerning traffic measurement capabilities and formats; and

k. Details concerning AMA features and formats to be provided.

6.2 As a part of the response to the bid, the bidder must also list information concerning the types and quantities of spare parts to be furnished. All units, excluding those units described in paragraph (x)(6)(i)(C) of § 1755.522, must fall into one of the four classes. The information must be in the following format:

Unit No.	Unit name	Quantity of units in the CO's and RST's which are bid				Quantity of spare parts furnished with this bid			
		Class 1	Class 2	Class 3	Class 4	Class 1	Class 2	Class 3	Class 4

7. Explanatory Notes

APPENDIX D TO 7 CFR 1755.522—ACCEPTANCE CHECKLIST—SINGLE-POINT GROUNDING SYSTEM

1. Approval Statement

Telephone Company: _____

RUS Borrower Designation: _____

RUS Contract Number: _____

N/A _____

Name:

Central Office: _____

Remote: _____

Date of Inspection: _____

Names of Inspectors:

Owner Representative _____

Central Office Supplies _____

Consulting Engineer _____

Mutually Approved Exceptions:

_____

_____

_____

_____

Grounding System Approval:

Name (Owner Representative) _____

Signature _____

Title _____

Date _____

Name (Supplier Representative) _____

Signature _____

Title _____

Date _____

2. General Survey

2.1 This office is considered to be in the following category for probability of lightning damage based on the Figure 1 map in RUS TE&CM 823 (also refer to paragraph (u)(2) of § 1755.522)

____Very High ____Higher than Average ____ Average ____Lower than Average ____Very low

2.2 Central office ground field (COGF) to be inspected for proper bonding of conductors to ground rods, etc. COGF to earth grounding reading is _____ohms. (Refer to RUS TE&CM 802, Appendices C and D, Measurement Techniques.) Is this resistance reading acceptable? (Refer to RUS TE&CM 810, Items 1.6, 4.6.2 and 4.6.3 for protection considerations.)

Acceptable: ____Yes ____No

Comments: _____

_____

_____

2.3 Ground connection to be inspected from the master ground bar (MGB) to the central office ground field (COGF) to ensure it is properly sized and installed by most direct route with no sharp bends. (Refer to RUS TE&CM 810, Item 4.3.2 and section 8.1.)

Acceptable: ____Yes ____No

Comments: _____

_____

_____

2.4 Building structure grounds (steel rebar in footings, ironwork, etc.) are to be properly bonded and connected to the MGB. (Refer to RUS TE&CM 810, Item 4.3.4.)

Acceptable: ____Yes ____No

Comments: _____

_____

_____

2.5 Metallic central office door(s) are to be painted with metallic paint with doorknobs left bare. Door(s) and frames are to be 00PAGE P='739'≤grounded to the building structural ground or the MGB.

Acceptable: ____Yes ____No

Comments: _____

_____

_____

2.6 Metallic fences within 6 feet (183 cm) of the exchange building, storage facilities ground field, etc. are to be properly bonded to the COGF outside of the central office building. Handhole enclosure is to be used

for the COGF connection to permit inspection and disconnect for earth resistance testing. (Refer to RUS TE&CM 810, Appendix C, Item 4.6.1.)

Acceptable: ____ Yes ____ No

Comments: _____

2.7 Lightning rod systems are to be grounded by a separate dedicated ground field. A bond should be provided between the COGF and the lightning rod ground field. Handhole enclosure is to be used for the COGF connection to permit inspection and disconnect for earth resistance testing. (Refer to RUS TE&CM 810, Item 4.3.2.1.)

Acceptable: ____ Yes ____ No

Comments: _____

2.8 Radio/microwave tower ground grid is to be properly bonded to the COGF by a direct outside connection. Handhole enclosure is to be used for the COGF connection to permit inspection and disconnect for earth resistance testing. (Refer to RUS TE&CM 810, Item 4.3.2 and section 10.)

Acceptable: ____ Yes ____ No

Comments: _____

2.9 If a qualified metallic water system is present, inspect the MGB connecting conductor to ensure that it is properly sized and installed by the most direct route with no sharp bends and that it is clamped solidly on the water pipes. (Refer to RUS TE&CM 810, Item 4.3.3 for details on metallic water system grounding.)

Acceptable: ____ Yes ____ No

Comments: _____

2.10 All power and grounding conductors are to be continuous, end to end, with no splices, size discontinuity or intermediate terminations. If an exception is necessary, unusual care must be taken to assure proper bonding between the two sections. (Refer to RUS TE&CM 810, Appendix C, section 5.)

Acceptable: ____ Yes ____ No

Comments: _____

2.11 All ground conductors should be void of sharp bends along their entire lengths. (Refer to RUS TE&CM 810, Item 8.2.2.)

Acceptable: ____ Yes ____ No

Comments: _____

2.12 Ground conductors should only be placed in nonmetallic conduit. Those routed through metallic conduit require that both ends of the conduit be bonded to the ground conductor. (Refer to RUS TE&CM 810, Item 8.2.4.)

Acceptable: ____ Yes ____ No

Comments: _____

2.13 Ground conductors should not be encircled by metallic clamp. Metallic straps are to be removed and replaced with nonmetallic clamps. (Refer to RUS TE&CM 810, Item 8.2.4.)

Acceptable: ____ Yes ____ No

Comments: _____

2.14 If metallic conduit is used, it is to be insulated from all ironwork.

Acceptable: ____ Yes ____ No

Comments: _____

2.15 Inspect to determine if the required central office supplier electrostatic discharge plates, wrist wraps, antistatic floor mats, etc. are available and properly installed. (Refer to RUS TE&CM 810, Item 12.3.)

Acceptable: ____ Yes ____ No

Comments: _____

2.16 Ground conductors, except green wires, should not be routed close and parallel to other conductors so as to minimize induction on surges into equipment wiring. It is also better not to route these ground conductors through cable racks or troughs, or within the confines of any iron work. (Refer to RUS TE&CM 810, Item 8.2.3.)

Acceptable: ____ Yes ____ No

Comments: _____

3. Master Ground Bar (MGB)

3.1 The designated P, A, N, and I segments of the master ground bar (MGB) should be clearly identified. (Refer to RUS TE&CM 810, Figure 1 for MGB segmentation arrangement.)

Acceptable: ____ Yes ____ No

Comments: _____

3.2 Check for appearance and proper location of following on MGB:

(a) R—Interior radio equipment[1]
(b) C—Cable entrance ground bar[1]
(c) M—MDF ground bar[1]
(d) G—Standby power equipment frame ground[1]
(e) N—Commercial power MGN[2]
(f) B—Building structure ground[2]
(g) L—Central office ground field[2]
(h) W—Water pipe system[2]
(i) N[1]—Battery Return[3]
(j) N[2]—Outside IGZ: _____[3]
(k) N[3]—Outside IGZ: _____[3]
(l) I[1]—Ground window bar[4]
(m) I[2]—Ground window bar[4]

Acceptable: ____ Yes ____ No

Comments: _____

3.3 All connections to MGB are to be two-hole bolted down copper crimped or compression type terminal lugs. (NOTE: No solder connections are permitted.)

Acceptable: ____ Yes ____ No

Comments: _____

3.4 MGB is to be properly insulated from the mounting surface.

Acceptable: ____ Yes ____ No

Comments: _____

3.5 All connections are to be tight.

Acceptable: ____ Yes ____ No

Comments: _____

3.6 The MGB is to have an anticorrosion coating of the type which enhances conductivity.

Acceptable: ____ Yes ____ No

Comments: _____

3.7 Bar is to be clearly stenciled or legibly labeled ''MGB.''

Acceptable: ____ Yes ____ No

Comments: _____

3.8 All ground leads are to be properly sized and labeled as to point of origin. (Refer to RUS TE&CM 810, Item 8.3.1 and section 8.1.)

Acceptable: ____ Yes ____ No

Comments: _____

4. Ground Window Bar (GWB)

4.1 All equipment grounds that originate inside of an Isolated Ground Zone (IGZ) are to be terminated on the GWB which is preferably located physically inside the IGZ and insulated from its support. (Refer to RUS TE&CM 810, Item 5.1.)

Acceptable: ____ Yes ____ No

Comments: _____

4.2 Each GWB is to be connected to the MGB by the most direct route with a conductor of 2/0-gauge or coarser, or resistance of less than 0.005 ohms. Parallel conductors for redundancy if required by the supplier. (Refer to RUS TE&CM 810, Item 8.1.2.)

Acceptable: ____ Yes ____ No

Comments: _____

4.3 The metal framework grounds of only that switching equipment and associated electrical equipment located inside of the IGZ should be connected to the GWB as required by the central office equipment supplier. (Refer to RUS TE&CM 810, Item 5.5.)

Acceptable: ____ Yes ____ No

Comments: _____

4.4 GWB is to be clearly stenciled or labeled ''GWB.''

Acceptable: ____ Yes ____ No

Comments: _____

4.5 All connections are to be tight.

Acceptable: ____ Yes ____ No

Comments: _____

5. Isolated Ground Zone (IGZ)

5.1 IGZ areas are to be clearly marked on the floor or in some other easily recognizable manner. (Refer to RUS TE&CM 810, Item 6.1.1)

Acceptable: ____ Yes ____ No

Comments: _____

5.2 Confirm that all framework, cabinets, etc., within the IGZ are ground connected only to the GWB. (Refer to RUS TE&CM 810, Item 5.5.)

[1] Surge Producer—(P)
[2] Surge Absorber—(A)
[3] Grounds to non-IGZ Equipment—(N)
[4] Grounds to IGZ Equipment (GWB's)—(I)

Acceptable: ____ Yes ____ No

Comments: _____

5.3 All cable racks, ground mats, switching and transmission equipment within the IGZ are to have ground leads *only* to the GWB. (Refer to RUS TE&CM 810, Item 5.5.2.)

Acceptable: ____ Yes ____ No

Comments: _____

5.4 Review ac power feed arrangement within the IGZ for acceptable receptacle type and confirm that all green wires are properly connected. (Refer to RUS TE&CM 810, Item 5.5.4.)

Acceptable: ____ Yes ____ No

Comments: _____

5.5 All ironwork, metallic conduit, and other equipment associated with the switch are to be properly insulated at the IGZ boundary as stipulated by the supplier. (Refer to RUS TE&CM 810, Item 6.2.)

Acceptable: ____ Yes ____ No

Comments: _____

5.6 With the GWB disconnected from the MGB, the resistance reading of _____ ohms between the GWB and the MGB indicates adequate isolation. (CAUTION: Test is to be conducted only with the approval and under the direction of the central office supplier.)

Acceptable: ____ Yes ____ No

Comments _____

6. Entrance and Tip Cables

6.1 When neither a cable vault nor a splicing trough exists, the outside plant cable should be brought into the central office and spliced to tip cables with a PVC outer jacket (ALVYN[R]) or equivalent as close as practical to the cable entrance. (Refer to RUS TE&CM 810, Item 7.3.4.)

Acceptable: ____ Yes ____ No

Comments: _____

6.2 All outside entrance cables and all tip cable shields are to be separated by at least a 3-inch (7.6 cm) gap between shield ends.

Acceptable: ____ Yes ____ No

Comments: _____

6.3 All entrance cable shields are to be bonded separately to #6 AWG or larger insulated wire or bonding ribbon and connected to the Cable Entrance Ground Bar (CEGB) by most direct route with minimum bends.

Acceptable: ____ Yes ____ No

Comments: _____

6.4 Outside plant cable shields are to be connected only to the CEGB, and the tip cable shields are to be connected only to the Main Distributing Frame Bar (MDFB).

Acceptable: ____ Yes ____ No

Comments: _____

7. Cable Entrance Ground Bar (CEGB)

7.1 The CEGB is to be properly insulated from the mounting surface. (Refer to TE&CM 810, Item 4.2.1.)

Acceptable: ____ Yes ____ No

Comments: _____

7.2 The CEGB is to be located as close as possible to the physical ends of the entrance cable shields.

Acceptable: ____ Yes ____ No

Comments: _____

7.3 All connections are to use two-hole bolted down copper crimped or compression type terminal lugs. (NOTE: No solder connections are permitted.)

Acceptable: ____ Yes ____ No

Comments: _____

7.4 All connections are to be tight.

Acceptable: ____ Yes ____ No

Comments: _____

7.5 Bar is to be clearly stenciled or legibly labeled ''CEGB.''

Acceptable: ____ Yes ____ No

Comments: _____

7.6 All ground leads are to be properly sized and labeled.

Acceptable: ____ Yes ____ No

Comments: _____

7.7 The CEGB is to have an anticorrosion coating of the type which enhances conductivity.

Acceptable: ____ Yes ____ No

Comments: _____

_____

_____

7.8 The CEGB is to be connected to the MGB by a properly sized conductor and by the most direct route. (Refer to RUS TE&CM 810, section 8.1.)

Acceptable: ____ Yes ____ No

Comments: _____

_____

_____

8. Main Distributing Frame (MDF)

8.1 RUS strongly recommends that MDF protectors be furnished without heat coils. (Refer to RUS TE&CM 810, section 7.6.)

Acceptable: ____ Yes ____ No

Comments: _____

_____

_____

8.2 Incoming cable pairs terminated on MDF protector assemblies should be protected with protector modules. These modules should contain white coded carbon blocks or orange coded gas tube arrestors that are included in the RUS List of Materials. (Refer to RUS TE&CM 810, Item 7.4)

Acceptable: ____ Yes ____ No

Comments: _____

_____

7 _____

8.3 All incoming subscriber cable pairs are to be properly terminated at either a protector equipped terminal or connected to ground.

Acceptable: ____ Yes ____ No

Comments _____

_____

_____

8.4 MDF protector assemblies may be mounted directly on the vertical frame ironwork. Protector assemblies on each vertical are interconnected with each other and the Main Distributing Frame Bar (MDFB) with a #6 copper grounding conductor. Alternative means of connecting to the MDFB are also acceptable which do not rely on the frame ironwork for conducting surge currents to ground. (Refer to RUS TE&CM 810, section 7.)

Acceptable: ____ Yes ____ No

Comments _____

_____

_____

8.5 Protective ''ground connections'' should be provided between the MDFB and the frame ironwork for personnel protection regardless of the type of protector assembly used. Protective ground leads should be 14-gauge, less than 12 inches (30.5 cm) in length with paint thoroughly removed at point of connection to the ironwork. (Refer to RUS TE&CM 810, Item 7.1.3.)

Acceptable: ____ Yes ____ No

Comments _____

_____

_____

8.6 The MDFB should be insulated from the frame ironwork in all cases where it is used as a Master Ground Bar (MGB). (Refer to RUS TE&CM 810, Item 7.1.2.)

Acceptable: ____ Yes ____ No

Comments _____

_____

_____

8.7 Where the MDFB is used as the MGB in very small offices the protective ''ground connections'' should be connected on the N section of the bar. The MDF line protector assembly grounds should be connected to the P section of the bar. (Refer to RUS TE&CM 810, Item 7.1.4.)

Acceptable: ____ Yes ____ No

Comments _____

_____

_____

8.8 The MDFB is to be connected to the MGB by the most direct path with minimum bends and proper conductor size. (Refer to RUS TE&CM 810, Item 8.1.4.)

Acceptable: ____ Yes ____ No

Comments _____

_____

_____

8.9 The MDFB should be free of all other ground leads when not used as an MGB.

Acceptable: ____ Yes ____ No

Comments _____

_____

_____

8.10 Alternative arrangements which insulate the line protector assemblies and MDFB from the frame ironwork may require a direct ground connection of the frame ironwork to the MGB for personnel protection. Conductor is properly sized and tightened with paint removal on main frame ironwork at point of connection.

Acceptable: ____ Yes ____ No

Comments _____

_____

_____

9. Power Service Protection and Grounding

9.1 The ground conductor between the ac power system multigrounded neutral (MGN) at the main ac disconnect panel and the master ground bar (MGB) is to be properly sized

and connected. (Refer to RUS TE&CM 810, Items 2.19, 4.3.1 and 8.1.3.)

Acceptable: ____ Yes ____ No

Comments: _____

9.2 If there is a non-MGN ac power system, there is to be a properly sized and connected insulated conductor bond between the power service ground electrode and the MGB. (Refer to RUS TE&CM 810, Item 4.3.1.1.)

Acceptable: ____ Yes ____ No

Comments: _____

9.3 AC conductors including ground conductors serving 120-volt ac electric convenience receptacles and all direct wire peripheral equipment, located in the IGZ, should be sized in accordance with normal ''green wire'' criteria. (Refer to RUS TE&CM 810, Items 5.5.4, 5.5.5, and 5.5.6.)

Acceptable: ____ Yes ____ No

Comments: _____

9.4 Minimum protection for ac power serving the central office buildings should consist of an RUS accepted secondary arrestor at the service entrance. (Refer to RUS TE&CM 810, section 9.)

Acceptable: ____ Yes ____ No

Comments: _____

9.5 A properly sized conductor for ground bonding between the standby power plant framework (not separately derived) and the MGB is to be provided to equalize framework voltages for personnel safety reasons. (Refer to RUS TE&CM 810, Item 4.2.4.)

Acceptable: ____ Yes ____ No

Comments: _____

10. Miscellaneous

10.1 All non-IGZ equipment frames, relay racks, cable racks and other ironwork are to be properly connected to the MGB. (Refer to TE&CM 810, Item 4.4.)

Acceptable: ____ Yes ____ No

Comments: _____

10.2 Shields on high frequency intra-office cables are to be properly isolated and connected only to an isolation ground bar in the relay rack. All shielded cables entering the IGZ should only be referenced at the IGZ termination point as given by the manufacturer. (Refer to RUS TE&CM 810, Item 7.2.1.2.)

Acceptable: ____ Yes ____ No

Comments: _____

10.3 Isolation ground bars in the relay racks are to be properly connected to the MGB with appropriate sized conductor with no sharp bends.

Acceptable: ____ Yes ____ No

Comments: _____

10.4 All radio equipment cabinet(s) are to be at least 10 feet (305 cm) from the IGZ.

Acceptable: ____ Yes ____ No

Comments: _____

10.5 The metal spare parts cabinet is to be grounded with a #6 AWG or larger insulated wire to non-IGZ cable rack, etc. or directly to the MGB.

Acceptable: ____ Yes ____ No

Comments: _____

[58 FR 30938, May 28, 1993; 58 FR 36252, July 6, 1993; as amended at 60 FR 1711, Jan. 5, 1995, 60 FR 64312, 64314, Dec. 15, 1995]

§§1755.523—1755.524 [Reserved]

§1755.525 Form 525, central office equipment contract (including installation).

The RUS Form 525, Central Office Equipment Contract (Including Installation), in this section shall be used for all purchases of central office equipment (other than such purchases of special equipment using Form 397) using RUS financial assistance when the equipment is supplied and installed by the seller or installed by a firm under contract with the seller as defined in 7 CFR part 1753, subparts E and H. The RUS Form 525 Central Office Equipment Contract follows:

CENTRAL OFFICE EQUIPMENT CONTRACT (INCLUDING INSTALLATION)

Notice and Instructions to Bidders; Central Office Equipment Project (Including Installation)

1. Sealed Proposals for the engineering, furnishing, delivery, and installation of central office equipment, materials and software for the

_____

_____

(hereinafter called the ''Owner'') which is to be part of the system known as

_____

_____

to be financed pursuant to a loan contract between the Owner and the United States of America (hereinafter called the ''Government'') by the Administrator of the Rural Utilities Service (hereinafter called the ''Administrator'') will be received by the Owner on or before _____ o'clock, _____.M.,

_____

at _____

_____

at which time and place the Proposals will be publicly opened and read. The Rural Telephone Bank may also be a party to the loan contract.

2. The Bid Documents (composed of plans, specifications and drawings), together with all necessary forms and other documents for Bidders, may be obtained from the Owner or from the Engineer, at the latter's office at

_____

_____

The Specifications may be examined at the office of the Owner or at the office of the Engineer. A copy of the loan contract between the Owner and the Government may be examined at the office of the Owner.

Each set of Bid Documents will have a serial number, assigned by the Engineer, and the number of each set with the name of the Bidder will be recorded by the Engineer. Bids will be accepted only from original Bidders, or from some other qualified Bidder to whom such a set has been transferred by the original Bidder with the approval of the Engineer prior to the pre-bid technical session.

3. A pre-bid technical session will be held with each Bidder during the week of _____, 19_____ at

_____

for the purpose of receiving the Bidder's Technical Proposal, discussing details of the Project(s), and considering suggestions from Bidders. The Owner shall attach to this Notice a list of the information required in the Bidder's Technical Proposal. Each Bidder will be given a specific time period for the pre-bid technical session. At the pre-bid technical session, the Bidder shall fully describe to the Owner any exceptions to the Specifications the Bidder may request. In addition, the Bidder shall identify all features and capabilities that are not fully developed or do not have a verifiable satisfactory field performance record. If the Owner decides to incorporate any changes into the Specifications, the Owner shall furnish all prospective Bidders a copy of the Specifications containing such revisions (the ''Revised Specifications'') and all Bids shall be made on the basis of the Revised Specifications. At this session, the Bidder shall identify all documentation and materials that it claims constitute agreed excluded documentation under section (2)(xi) of the Software License. The Bidder shall claim as agreed excluded documentation only those items it may be unable to provide to the Borrower as required by said section (2)(xi). The Engineer shall immediately provide a list of all items so identified to [appropriate RUS office]. The Engineer shall inform the Bidder at least _____ days before the scheduled bid opening whether either the Engineer or [RUS] will reject the Bid because of items so identified. Licensor agrees that certain Licensed Software cannot be excluded from the requirements of said section (2)(xi), including but not limited to software that would significantly impair the operation of the System, would significantly impair the ability of the Owner to generate revenue, or would pose a risk to RUS loan security. If allowed, the agreed excluded documentation shall be individually identified in an attachment to the Bid. No bid shall be accepted from a Bidder who fails to attend the pre-bid technical session or fails to demonstrate to the Owner that its equipment meets the requirements of the Plans and Specifications.

4. Proposals shall be submitted on the forms furnished by the Owner and must be delivered in a sealed envelope addressed to the Owner. The name and address of the Bidder, its license number, if a license is required for bidding on a project by the State, and the date and hour of the opening of bids must appear on the envelope in which the Proposal is submitted. Proposals must be in ink or typewritten. No alterations or interlineations will be permitted, unless made, initialed, and dated before submission.

5. Prior to the submission of the Proposal, the Bidder shall make and shall be deemed to have made a careful examination of the Specifications, forms of Bidder's Proposal and Acceptance, and Contractor's Bond attached hereto, and shall become informed as to the location and characteristics of the proposed central office and remote terminal installations, features and services, the transportation facilities, the kind of facilities required before and during the delivery and installation of the equipment and materials, the general local conditions and all other matters that may affect the cost and

the time of completion of the installations. Bidders will be required to comply with all applicable statutes, codes, and regulations, including those pertaining to the licensing of contractors and the ''Anti Kick-Back Acts,'' as amended, (40 U.S.C. 276c; 41 U.S.C. 51 *et seq.*) and regulations issued pursuant thereto, and 18 U.S.C. 287, 874, 1001, as amended.

6. Each Proposal must be accompanied by a Bid Bond, in the form attached, or a certified check on a bank that is a member of the Federal Deposit Insurance Corporation, payable to the order of the Owner, in an amount equal to ten percent (10%) of the maximum possible bid price. The maximum possible bid price is the sum of the total base bid, spare parts, maintenance tools and all positive amounts for alternates. Each Bidder agrees that, if its Proposal is one of the three low Proposals, its Bid Bond or check shall be held by the Owner until a Proposal is accepted and Contractor's Bond, when required, is furnished by the successful Bidder and such acceptance has been approved by the Administrator, or for a period not to exceed ninety (90) days from the date hereinbefore set for the opening of Proposals whichever period shall be the shorter. If such Proposal is not one of the three low Proposals, the Bid Bond or check will be returned to the Bidder within a period of thirty (30) days.

7. The successful Bidder will be required to furnish to the Owner a Contractor's Bond in conformance with the requirements of 7 CFR part 1788, subpart C, Insurance for Contractors, Engineers, and Architects.

8. Should the successful Bidder fail or refuse to furnish a Contractor's Bond within thirty (30) days after written notification of the award of the Contract by the Owner, the Bidder will be considered to have abandoned the Proposal. In such event, the Owner shall be entitled (a) to enforce the Bid Bond in accordance with its terms, or (b) if a certified check has been delivered with the Proposal, to retain from the proceeds of the certified check the difference (not exceeding the amount of the certified check) between the amount of the Proposal and such larger amount for which the Owner may in good faith contract with another party to construct the Project(s). The term ''successful Bidder'' shall be deemed to include any Bidder whose Proposal is accepted after another Bidder has previously refused or has been unable to execute the Contract or to furnish a Contractor's Bond.

9. If requested by the Owner or the Administrator, the Bidder shall furnish evidence, satisfactory to the Owner and the Administrator, that the Bidder has the necessary facilities, ability, and financial resources to perform the Contract.

10. The Contract, when executed, shall be deemed to include the entire agreement between the parties thereto and neither party shall claim any modification thereof resulting from any representation or promise made at any time by any officer, agent, or employee of the other or by any other person.

11. The Owner reserves the right to waive minor irregularities or minor errors in any Proposal, if it appears to the Owner that such irregularities or errors were made through inadvertence. Any such irregularities or errors so waived must be corrected on the Proposal in which they occur prior to the execution of any Contract which may be awarded thereon. Failure to provide a Bid Bond or check as specified in item six (6) above is not a minor irregularity.

12. The Owner reserves the right to reject any or all Proposals.

13. The equipment to be furnished for all central offices and remote switching terminals included in the Proposal is to be of one and the same basic design. A Proposal submitted on any other basis will not be considered.

14. Equal Opportunity and Employment

(a) The Offeror's or Bidders's attention is called to the ''Equal Opportunity Clause'' and the ''Standard Federal Equal Employment Specifications'' set forth herein.

(b) The goals and timetables for minority and female participation, expressed in percentage terms for the Contractor's aggregate workforce in each trade on all construction work in the covered area, are as follows:

Timetables	Goals for minority participation for each trade	Goals for female participation in trade
	(Insert goals for each year)	(Insert goals for each year)

These goals are applicable to all the Contractor's construction work (whether or not it is federal or federally assisted) performed in the covered area. If the Contractor performs construction work in a geographical area located outside of the covered area, it shall apply the goals established for such geographical area where work is actually performed. With regard to this second area, the Contractor also is subject to the goals for both its federally involved and nonfederally involved construction.

The Contractor's compliance with Executive Order 11246 (3 CFR, 1963–1965 Comp., p. 340) and the regulations in 41 CFR part 60–4 shall be based on its implementation of the Equal Opportunity Clause, specific affirmative action obligations required by the specifications set forth in 41 CFR 60–4.3(a), and its efforts to meet the goals. The hours of minority and female employment and training must be substantially uniform throughout the length of the contract, and in each trade, and the Contractor shall make a good faith effort to employ minorities and women evenly on each of its projects. Transfer of minority or female employees or trainees from

Contractor to Contractor or from project to project for the sole purpose of meeting the Contractor's goals shall be a violation of the contract, Executive Order 11246 and the regulations in 41 CFR part 60–4. Compliance with the goals will be measured against the total work hours performed.

(c) The Contractor shall provide written notification to the Director of the Office of Federal Contract Compliance Programs within 10 working days of award of any construction subcontract in excess of $10,000 at any tier for construction work under the contract resulting from this solicitation. The notification shall list the name, address and telephone number of the subcontractor; employer identification number of the subcontractor; estimated dollar amount of the subcontract; estimated starting and completion dates of the subcontract; and the geographical area in which the subcontract is to be performed.

(d) As used in this Notice, and in the contract resulting from this solicitation, the ''covered area'' is

_____

_____

(insert description of the geographical areas where the contract is to be performed giving the state, county and city, if any).

NOTE: Paragraph 14 is applicable to the extent required by law. If applicable, certain information needs to be inserted at subparagraphs (b) and (d). In determining whether and how this paragraph is applicable, reference should be made to Office of Federal Contract Compliance Programs regulations (41 CFR Chapter 60).

_____

Date

_____

Owner

By _____

Title _____

Bidder's Proposal to Engineer, Furnish, Deliver, and Install Equipment, Materials and Software

(Proposal shall be submitted in ink or typewritten)

To: _____

(Hereinafter called the ''Owner'')

The undersigned (hereinafter called the ''Bidder'') hereby proposes to engineer, furnish, deliver, and install the equipment, materials and software for each Project listed under Column 1, ''Project,'' in Article I, section 1, and described in the plans, specifications and drawings (hereinafter called the ''Specifications'') prepared by the Owner and attached hereto and made a part hereof, financed by a loan to the Owner made or guaranteed by the United States of America, acting through the Administrator of the Rural Utilities Service (hereinafter called the ''Administrator''), or by loans to the Owner by the United States of America and by the Rural Telephone Bank, and designated _____.

The Bidder has become informed as to the location and characteristics of the proposed installations, has become informed as to the kind of facilities required before and during the delivery and installation of the equipment, material, and software and has become acquainted with the labor conditions which would affect the work.

The Bidder agrees that if its bid is accepted the following terms and conditions shall govern.

If, in submitting this Proposal, the Bidder has taken any exception to the form of proposal furnished by the Owner, the Bidder understands that the Owner and the Administrator may evaluate the effect of such change as they see fit and they may exclude the Proposal from consideration in determining the award of the Contract.

ARTICLE I

[Section 1. Bid Price. The Bidder will engineer, furnish, deliver, and install the equipment, materials, and software described in the Specifications for the following sums:]

	Time in calendar days								
Project (see notes 1, 2 and 3) (1)	Materials, equipment, and software (2)	Installation (3)	Base bid (4)	Delivery (5)	Completion of installation (6)	Completion of the project (see note 4) (7)	Spare parts (8)	Item (9)	Maintenance tools (10)
	$	$	$				$	a	$
	$	$	$				$	b	$
	$	$	$				$	c	$
	$	$	$				$	d	$
	$	$	$				$	e	$
	$	$	$				$	f	$
	$	$	$				$	g	$
	$	$	$				$	h	$
	$	$	$				$	i	$
	$	$	$				$	j	$
Totals	$	$	XXXXXXXXXX	XXXXXXXXXX	XXXXXXXXXX	XXXXXXXXXX	$	XXX	$
Total Base Bid			$	XXXXXXXXXX	XXXXXXXXXX	XXXXXXXXXX	XXXXXXXXXX	XXXXX	XXXXXXXXXX
Alternate No. 1	$	$	$				$	k	$
Alternate No. 2	$	$	$				$	l	$
Alternate No. 3	$	$	$				$	m	$
Alternate No. 4	$	$	$				$	n	$
Alternate No. 5	$	$	$				$	o	$
Alternate No. 6	$	$	$				$	p	$

Note 1: If a remote switching terminal, so designate and list after host office.
Note 2: All items included in a Project shall have the same completion schedule.
Note 3: Each Project shall be separated by a blank line.
Note 4: Time in calendar days for Completion of the Project shall be 60 days after the time established for Completion of Installation.

Section 2. Acceptable Equipment. Unless otherwise specified by the Owner (and agreed to in advance in writing by RUS), the Bidder agrees to furnish under this Proposal only equipment which is currently covered by a letter of acceptance issued by the Chairman, Committee ''A'' (Telephone). [Note: for convenience of borrowers and others, domestically manufactured products are included in RUS Bulletin 17551–100.] The Bidder agrees also to furnish only materials, equipment and software which are new and of most recent issue and manufacture, as of the date of the bid opening, or of near future release for which the Bidder can assure timely delivery.

Section 3. Changes in Project. The Owner, with the approval of the Administrator, may from time to time during the performance of the Contract effected by the acceptance of this Proposal, make reasonable changes, additions to or subtractions from the Specifications which are part of the Proposal as conditions may warrant. However, if substantial changes in the Project shall require an extension of time, a reasonable extension will be granted if the Bidder shall make a written request therefor to the Owner within thirty (30) days after any such change is made. Further, if the cost to the Bidder shall be increased or decreased by any such change or addition, the Contract price shall be increased or decreased by a reasonable amount in accordance with a contract amendment signed by the Owner and the Bidder and approved by the Administrator. No claim for additional compensation for any such change or addition will be considered unless the Bidder shall have made a written request therefor to the Owner prior to the commencement of work in connection with such change or addition. The Delivery or Completion of Installation times specified under Columns 5, ''Delivery'', and 6, ''Completion of Installation,'' in Article I, section 1, can only be changed by a Contract amendment approved by the Bidder, the Owner and RUS.

Section 4. Taxes. The bid prices herein set forth do not include any amounts payable by the Bidder or the Owner on account of taxes imposed by any taxing authority upon the sale, purchase or use of materials, supplies, equipment or software to be incorporated in the Project(s). If any such tax is applicable to the sale, purchase or use of materials, supplies, equipment or software hereunder, the amount thereof shall be stated separately on all invoices and paid by the Owner.

ARTICLE II

Delivery and Installation

Section 1. Time of Completion of Installation. The time of delivery of materials, equipment, and software and of Completion of Installation are of the essence of this Contract. The Bidder shall deliver the materials, equipment, and software required hereunder for each Project upon the time intervals established under Column 5, ''Delivery,'' in Article I, section 1, after the Administrator shall have approved this Contract in writing, and shall prosecute diligently and complete the installation of materials, equipment and software for each Project in accordance with the terms of this Contract and Specifications to the satisfaction of the Owner and the Administrator within the number of calendar days specified under Column 6, ''Completion of Installation,'' in Article I, section 1. The times for such Delivery or such Completion of Installation shall be extended for the period of any reasonable delay due exclusively to causes beyond the control and without the fault of the Bidder, including, but not limited to, acts of God, fires, strikes, floods, changes in the Specifications as herein provided, and acts or omissions of the Owner with respect to matters for which the Owner is solely responsible. However, no such extension of time shall be granted the Bidder unless within thirty (30) days after Bidder becomes aware of the happening of any event relied upon by the Bidder for such an extension of time the Bidder shall have made a request therefor in writing to the Owner. Further, no delay in such time for delivery of materials, equipment and software or Completion of Installation or in the progress of the work shall result in any liability on the part of the Owner, except that the Owner shall be responsible for and shall pay the Bidder on demand all additional, supportable costs and expenses incurred by the Bidder due to delays to the extent such delays are caused by the Owner's failure to perform its obligations under this Contract unless the Owner's failure to perform is caused by forces beyond its control.

Section 2. Sequence of Installation. All Projects shall be completed in the sequence in which they are listed under Column 1, ''Project,'' in Article I, section 1.

Section 3. Supervision and Inspection. The Bidder shall give sufficient supervision to the work at the site of the Project(s), using the Bidder's best skill and attention. The Bidder shall carefully study and compare all drawings, specifications, and other instructions and shall promptly report to the Owner any error, inconsistency or omission which Bidder may discover. The Bidder shall keep on the Project(s) during its progress a competent superintendent (hereinafter called the ''Superintendent'') and any necessary qualified assistants, all satisfactory to the Owner. The Superintendent shall represent the Bidder and all directions given to the Superintendent by the Owner shall be as binding as if given to the Bidder. When requested by the Bidder, such directions shall be confirmed in writing.

Section 4. Inspection and Tests. The installation of materials, equipment and software hereunder and all materials, equipment and

software used therein shall be subject to the inspection, test and approval of the Owner and Administrator, in accordance with the Specifications. The Bidder shall furnish all pertinent information required concerning the nature or source of materials. The Owner and the Administrator shall have the right to inspect pertinent records (other than manufacturing cost information) of the Bidder and of any subcontractor relevant to this Project(s). The Bidder shall provide all reasonable facilities necessary for such inspection and tests, except that the Bidder is not required to provide test equipment for the Owner's tests unless specifically required in the Specifications. Failure of the Owner to make inspections shall not release the Bidder from performance required hereunder.

The Bidder shall notify the Owner in writing upon Completion of Installation of each Project and provide a copy of the results of tests, if any, conducted by the Bidder.

The Owner shall make inspections and tests of each Project for compliance with the Specifications and provide the Bidder the results of such inspections and tests on RUS Form 517, Results of Acceptance Tests. If the Owner has not completed its inspections and tests and provided the Bidder the results on RUS Form 517 within thirty (30) days after the written notification of Completion of Installation from the Bidder, the Owner shall (1) pay to the Bidder the costs incurred by the Bidder as a result of this delay, and (2) grant an extension of time for the Completion of the Project equal to the number of days from the date of the end of the thirty (30) day period until the date the Owner provides the RUS Form 517 to the Bidder.

Within thirty (30) days of receipt of the RUS Form 517 from the Owner, the Bidder shall correct all deficiencies, if any, listed on the RUS Form 517 and notify the Owner in writing of such corrections and deliver to the Owner the documents set forth in Article III, section 2, at which time a final Owner's inspection and test of each Project shall be conducted. If tests subsequent to this are made necessary by the Bidder's failure to satisfactorily resolve all such deficiencies as previously listed on the RUS Form 517, the Bidder shall pay the Owner for the cost incurred by the Owner for all such subsequent tests.

Section 5. Delivery of Possession and Control to the Owner. The Bidder shall deliver to the Owner, and the Owner shall accept, full possession and control of each Project on the date of Completion of the Project or on an earlier date if agreed under Article IV, section 2.

Section 6. Employees. The Owner shall have the right to require the removal of any employee of the Bidder from the Project site if in the judgment of the Owner such removal is necessary in order to protect the interest of the Owner.

Section 7. Defective Workmanship, Materials or Software. Throughout the warranty period defined below the Bidder shall, within thirty (30) days of written notice from the Owner, and without charge to the Owner, at the Bidder's option, either remedy or replace any materials, equipment or software found to be defective in material, workmanship or installation, or not in conformity with the Specification. This is subject to the following definitions and conditions:

(a) The warranty start date for a Project is the date of delivery of possession and control by the Bidder to the Owner of that Project included in the Contract. Refer to Article II, section 5. The warranty period is twelve (12) months from the warranty start date, or six (6) months from Completion of the Project, whichever results in the longer period of coverage.

(b) Without regard to the expiration of the warranty period set forth above, the Bidder warrants to the Owner that any Software furnished under this Contract shall function, for a period of five (5) years from the warranty start date defined in the Contract, in accordance with the specifications and any written or printed technical material provided by the Bidder to explain the operation of the Software and aid in its use. The Bidder shall correct all deficiencies within thirty (30) days from the date of receipt by the Bidder of written notice of such deficiencies from the Owner. An extension of this thirty (30) day period may be allowed only if agreed upon by the Owner. It shall be the Bidder's obligation to insert and thoroughly test, at no charge to the Owner, any software amendment or alteration provided to satisfy the obligations of this Section 7. If a deficiency is detected or a correction made within the final ninety (90) days of the warranty, the warranty shall be extended to a date ninety (90) days after the deficiency has been corrected.

(c) The Owner shall pay the Bidder for any use of the Bidder's technical assistance center except for usage to diagnose defects covered by this warranty.

(d) This warranty is not diminished by the acceptance of workmanship, materials, equipment, or software, or by the issuing of any certificate with respect to Completion of the Project.

(e) This warranty does not cover defects in materials, equipment or software that are caused by modifications to or abuse of materials, equipment or software by the Owner.

(f) The Owner shall bear the cost and risk of shipping defective components to the Bidder's designated repair center. The Bidder shall bear the cost and risk of shipping new or repaired replacement components to the Owner.

ARTICLE III

Payments and Releases of Lien

Section 1. Payment to Bidder.

(a) The Owner shall pay the Bidder upon the basis of written estimates of the materials, equipment, and software delivered at the site of the Project, presented by the Bidder, and approved by the Owner, the following percentages of the price of the materials, equipment, and software for each Project set forth under Column 2, ''Materials, Equipment, and Software,'' in Article I, Section 1, as and if revised:

(i) Forty-five percent (45%) when fifty percent (50%) of the materials, equipment, and software for each Project has been delivered at the site of the Project, and

(ii) Ninety percent (90%) when all the materials, equipment, and software required to place each Project into operation has been delivered at the site of the Project.

(b) Upon written notification of the Completion of Installation of each Project, the Owner shall pay the Bidder ninety percent (90%) of the Base Bid plus accepted alternates for that Project.

(c) Upon the Completion of Installation, but prior to the payment to the Bidder of any amount in excess of ninety percent (90%) of the Total Contract Price, the Owner shall inspect the work performed hereunder and if the work shall be found to be in accordance with the Specifications and all provisions hereunder, the Owner shall certify as to that fact and as to the amount of the balance found to be due to the Bidder. No later than thirty (30) days after Completion of the Contract, as defined in Article VII, section 1, ''Definitions,'' the Owner shall submit such final certificate to the Administrator for approval and when such approval has been given, the Owner shall pay to the Bidder all unpaid amounts to which the Bidder shall be entitled hereunder; provided, however, such final payments shall be made not later than sixty (60) days after Completion of the Contract unless approval by the Administrator shall be withheld or delayed due to Bidder's actions or failure to act.

(d) Payment on undisputed invoices submitted by the Bidder shall be due thirty (30) days after receipt. Any amounts of these invoices not paid when due shall accrue interest at a rate one and one-half percent (1½%) higher than the ''Prime Rate'' published in the Wall Street Journal in its first issue of the month in which payment becomes due and changing each subsequent month with the first issue published in the respective month.

(e) Notwithstanding other provisions of this Article III, the Bidder, shall, at its request in writing, receive payment in full for each Project upon Completion of Installation of such and upon:

(i) Completion of the final acceptance tests of such Project as certified on RUS Form 754, Certificate of Completion, Central Office(s) and approved by the Owner.

(ii) Submission to the Owner and Administrator of the releases of lien and Certificate of Contractor referred to in section 2 hereof or in lieu thereof, where the Bidder is the manufacturer, the execution of the Certificate of Contractor and Indemnity Agreement on RUS Form 754, all in respect of such Project.

(iii) Approval by the Administrator of the Certificate of Completion, RUS Form 754 in respect of such Project.

Ten percent (10%) of the contract price of one central office shall be retained until the Bidder shall have furnished the certificates and releases of lien or indemnity agreement in respect of the Project required by section 2 of this Article III.

(This Section 1(e) is to be used only if (1) the Contract includes at least one central office and (2) the Owner wishes to allow the partial closeout procedure. The Owner shall strike out this Section 1(e) if the partial closeout procedure is not to be allowed)

(f) Acceptance by the Owner of equipment, materials, workmanship or software while the Bidder is in default under any provision of this Contract shall not be construed as a waiver by the Owner of any right hereunder including, without limitation, any right to liquidated damages the Owner may have by virtue of Article V, section 2.

Section 2. Release of Liens. Upon the Completion of Installation by the Bidder, but prior to the payment to the Bidder of any amount in excess of ninety percent (90%) of the Total Contract Price, except as specified in Article III, section 1(e), the Bidder shall deliver to the Owner (a) two original Waiver and Release of Lien in the form attached hereto, from manufacturers, material suppliers and subcontractors who have furnished materials or services for the work, and (b) two original Certificate of Contractor, in the form attached hereto, to the effect that all labor has been paid and that all such releases have been submitted to the Owner; and the Owner shall deliver to the Administrator for approval one of the originals of each such release and certificate.

In lieu of releases of lien where the Bidder is the manufacturer of the equipment, the Bidder may deliver to the Owner, in duplicate in the form attached hereto, a Certificate of Contractor and Indemnity Agreement, stating that all manufacturers, material suppliers and subcontractors who have furnished materials or services for the Project(s) have been paid in full, and agreeing to indemnify the Owner against any liens arising out of the Bidder's performance hereunder which may have been or may be filed against the Owner.

In this Article III ''manufacturer'' shall mean a Bidder who makes, produces, or manufactures the equipment and whose interest, including non-contracted installation, represent more than fifty percent (50%) of the value of the Total Contract Price.

ARTICLE IV

Particular Undertakings of the Bidder

Section 1. Protection to Persons and Property. At all times when equipment and materials are being delivered and installed the Bidder shall exercise reasonable precautions for the safety of employees on the job and of the public and shall comply with all applicable provisions of Federal, State and Municipal safety laws and building and construction codes. All machinery and equipment and other physical hazards shall be guarded in accordance with the ''Manual of Accident Prevention in Construction'' of the Associated General Contractors of America unless such instructions are incompatible with Federal, State or Municipal laws or regulations. The following provisions shall not limit the generality of the above requirements:

(a) The Bidder shall at all times keep the premises free from accumulations of waste material or rubbish caused by its employees or work, and at the completion of the work the Bidder shall remove all rubbish from and about the Project(s) and all its tools, scaffolding and surplus materials and shall leave its work ''broom clean.''

(b) The work, from its commencement to completion, or to such earlier date or dates when the Owner may take possession and control, shall be under the charge and control of the Bidder and during such period of control by the Bidder all risks in connection therewith, and in connection with the equipment, materials and software to be used therein, shall be borne by the Bidder. The Bidder shall make good and fully repair all injuries and damages to the equipment, materials and software under the control of the Bidder by reasons of any act of God, or any other casualty or cause whether or not the same shall have occurred by reason of the Bidder's negligence. The Bidder shall hold the Owner harmless from any and all claims for injuries of persons or for damage to property happening by reason of any negligence on the part of the Bidder or any of the Bidder's agents, subcontractors or employees during the control by the Bidder of the Project(s) or any part thereof. The Owner shall promptly notify the Bidder in writing of any such claims received and, except where the Owner is the claimant, shall give to the Bidder full authority and opportunity to settle such claims, and reasonably cooperate with the Bidder in obtaining information relative to such claims.

(c) Monthly reports of all accidents shall be promptly submitted to the Owner by the Bidder giving such data as may be prescribed by the Owner.

Section 2. Termination of Bidder's Risks and Obligations. The Bidder shall deliver to the Owner, and the Owner shall accept, full possession and control of each Project on the date of Completion of the Project. However, at any time after payment by the Owner to the Bidder of ninety percent (90%) of the Total Base Bid plus accepted alternates for that Project, but prior to Completion of the Project, the Owner and the Bidder may agree in writing to an earlier date of delivery of possession and control. Upon such delivery of possession and control of any Project the Bidder's risks and obligations as set forth in Article IV, section 1(b), pertaining to such Project shall be terminated; provided, however, that nothing herein contained shall relieve the Bidder of its obligation for full performance under the Specifications, or its liability with respect to defective workmanship or materials as specified in Article II, section 7 hereof. The equipment shall not be placed in service until delivery of possession and control to the Owner has been accomplished, as set forth above.

Section 3. Insurance. During the Bidder's performance hereunder, the Bidder shall take out and maintain fully paid insurance providing not less than the minimum coverage required by 7 CFR part 1788, subpart C.

The Owner shall have the right to require public liability insurance and property damage liability insurance in an amount greater than those required in 7 CFR part 1788, subpart C. If this requirement is included in the plans and specifications used for bidding, the added costs shall be included in the bid price. If the requirement is added after the Contract is approved, the additional premium or premiums payable solely as the result of such additional insurance shall be added to the Contract price, by Contract amendment.

Upon request by the Administrator, the Bidder shall furnish to the Administrator a certificate in such form as the Administrator may prescribe evidencing compliance with the foregoing requirements.

Section 4. Purchase of Materials. The Bidder shall purchase all materials and supplies except software outright and not subject to any conditional sales agreements, bailment lease or other agreement reserving unto the seller any right, title or interest therein. Materials and supplies other than software shall become the property of the Owner as the Owner makes payments therefor to the Bidder in accordance with Article III, Section 1(a).

Section 5. Software License. The software licensing agreement, if required, covering the rights, terms and conditions of the use and assignability of all software integral to the operation of the Project(s), shall be in the form of Addendum 1 to this Contract.

Section 6. Assignment of Guarantees. All guarantees of materials, equipment, workmanship and software running in favor of the Bidder shall be transferred and assigned to the Owner upon Completion of the Project and at such time as the Bidder receives final payment. Any such guarantees shall be in addition to the Bidder's warranty defined in Article II, section 7. This provision may be modified with respect to a particular warranty if the Bidder demonstrates to the satisfaction of RUS and the Owner that a transfer is not possible.

Section 7. Patent, Copyright, Trademark and Trade Secret Infringement. The Bidder shall hold harmless and indemnify the Owner from any and all claims, suits, and proceedings for the infringement of any patent, copyright, trademark or violation of trade secrets covering any equipment or software used in the work, except for items of the Owner's design or selection. If the Owner's use of equipment or software is enjoined, the Bidder shall promptly, at its own expense, modify or replace the infringing equipment or software so that it no longer infringes but remains functionally equivalent, or obtain for the Owner a license or other right to use. This shall be in addition to any other rights or claims which the Owner may have. The Bidder shall, at its own expense, (and the Owner agrees to permit Bidder to do so,) defend any suits which may be instituted by any party against the Owner for alleged infringement of patents, copyright, trademark or violation of trade secrets relative to the Bidder's performance hereunder. Either party shall notify the other promptly of any such claims, and the Owner shall give to the Bidder full authority and opportunity to settle such claims, and shall reasonably cooperate with the Bidder in obtaining information relative to such claims.

Section 8. Compliance with Statutes and Regulations. The Bidder shall comply with all applicable laws, statutes, ordinances, rules and regulations. The Bidder acknowledges that it is familiar with the Rural Electrification Act of 1936, as amended (7 U.S.C. 901 *et seq.*), the Anti-Kickback Acts, as amended (40 U.S.C. 276c; 41 U.S.C. 51 *et seq.*), and any rules and regulations issued pursuant thereto, and 18 U.S.C. 201, 286, 287, 641, 666, 874, 1001, 1361 and 1366, as amended. The Bidder understands that the obligations of the parties hereunder are subject to the applicable regulations and orders of the Governmental agencies having jurisdiction in the premises.

The Bidder represents that to the extent required by Executive Orders 12549 (3 CFR, 1985–1988 Comp., p. 189) and 12689 (3 CFR, 1989 Comp., p. 235), Debarment and Suspension, and 7 CFR part 3017, it has submitted to the Owner a duly executed certification in the form prescribed in 7 CFR part 3017.

The Bidder represents that, to the extent required, it has complied with the requirements of Public Law 101–121, section 319, 103 Stat. 701, 750–765 (31 U.S.C. 1352), entitled ''Limitation on use of appropriated funds to influence certain Federal contracting and financial transactions,'' and any rules and regulations issued pursuant thereto.

ARTICLE V

Remedies

Section 1. Completion on Bidder's Default. If default shall be made by the Bidder in the performance of any of the work hereunder, the Owner, without in any manner limiting its legal and equitable remedies in the circumstances, may serve upon the Bidder and the surety or sureties upon the Bidder's Bond or Bonds a written notice requiring the Bidder to cause such default to be corrected forthwith. Unless within thirty (30) days after the service of such notice upon the Bidder such default shall be corrected or arrangements for the correction thereof, satisfactory to both the Owner and the Administrator, shall have been made by the Bidder or its surety or sureties, the Owner may take over the performance of the Bidder's obligations hereunder and prosecute the same to completion by contract or otherwise for the account and at the expense of the Bidder, and the Bidder and its surety or sureties shall be liable to the Owner for any supportable cost or expense in excess of the bid price occasioned thereby. In such event, the Owner may take possession of and utilize, in completing the Project(s), any tools, supplies, equipment, appliances and plant belonging to the Bidder which may be situated at the site of the Project(s). The Owner, in such contingency, may exercise any rights, claims or demands which the Bidder may have against third persons in connection herewith and for such purpose the Bidder does hereby assign, transfer and set over unto the Owner all such rights, claims and demands.

Section 2. Liquidated Damages. Should the Bidder fail to complete any Project as shown under Column 7, ''Completion of the Project,'' in Article I, Section 1, within the time herein agreed upon, after giving effect to extensions of time, if any, herein provided, then, in that event and in view of the difficulty of estimating with exactness damages caused by such delay, the Owner shall, so long as the subject Project shall not have been placed in service, have the right to deduct from and retain out of such moneys which may be then due, or which may become due and payable to the Bidder, the sum of:

_____

dollars ($_____)

for _____

(Project)

for _____

dollars ($_____)

for _____

(Project)

dollars ($_____

for _____

per day for each and every day that such completion is delayed beyond the scheduled time for Completion of the Project, as liquidated damages and not as a penalty, up to the amount of the respective Base Bid plus accepted alternates for the affected Project: *Provided*, however, that the Owner shall promptly notify the Bidder in writing of the manner in which the amount claimed as liquidated damages was computed. The Bidder shall pay to the Owner the amount necessary to effect such payment in full. Such payment is not to be reduced by the value of any partial performance by the Bidder.

At the technical sessions, each Bidder shall identify all features and capabilities that are not fully developed or do not have a verifiable satisfactory field performance record. If the Owner allows these features to be bid as separate Projects, then they are to be individually listed under Columns 1 through 10, in Article I, section 1. These unproven features and capabilities are to be individually listed in this section 2 also, with liquidated damages amounts determined by the Owner and stated for each. If a Bidder neglects to identify any such feature at the technical session, delay in providing the feature is considered a delay in completing the associated Project and the Owner may assess liquidated damages listed for that Project regardless of whether the Project is placed in service.

Section 3. Consequential Damages. In no event shall the Bidder's liability for incidental or consequential loss or damage, except for personal injury or tangible property damage, exceed the amount of ten times the total contract price, as amended.

Section 4. Enforcement of Remedies by Administrator. The Administrator may on behalf of the Owner exercise any right or enforce any remedy which the Owner may exercise or enforce hereunder.

Section 5. Cumulative Remedies. Every right or remedy herein conferred upon or reserved to the Owner or the Administrator shall be cumulative and shall be in addition to every right and remedy now or hereafter existing at law or in equity or by statute and the pursuit of any right or remedy shall not be construed as an election. Provided, however, that the provisions of section 2 of this Article V shall be the exclusive measure of damages for failure by the Bidder to have effected the Completion of Project within the time herein agreed upon.

ARTICLE VI

EQUAL EMPLOYMENT

Section 1. The Bidder.

(a) The Bidder represents that:

(1) It has, _____ does not have _____, 100 or more employees, and if it has, that

(2) It has _____, has not _____, furnished the Equal Employment Opportunity Employers Information Report EEO–1, Standard Form 100, required of employers with 100 or more employees pursuant to Executive Order 11246 and Title VII of the Civil Rights Act of 1964.

(b) The Bidder agrees that it will obtain, prior to the award of any subcontract for more than $10,000 hereunder to a subcontractor with 100 or more employees, a statement, signed by the proposed subcontractor, that the proposed subcontractor has filed a current report on Standard Form 100.

(c) The Bidder agrees that if it has 100 or more employees and has not submitted a report on Standard Form 100 for the current reporting year and that if this contract will amount to more than $10,000, the Bidder will file such report, as required by law, and notify the Owner in writing of such filing prior to the Owner's acceptance of this Proposal.

(d) The Bidder certifies that it does not maintain or provide for its employees any segregated facilities at any of its establishments, and that it does not permit its employees to perform their services at any location, under its control, where segregated facilities are maintained. The Bidder certifies further that it will not maintain or provide for its employees any segregated facilities at any of its establishments, and that it will not permit its employees to perform their services at any location, under its control, where segregated facilities are maintained. The Bidder agrees that a breach of this certification is a violation of the Equal Opportunity Clause in this contract. As used in this certification, the term ''segregated facilities'' means any waiting rooms, work areas, restrooms and washrooms, restaurants and other eating areas, timeclocks, locker rooms and other storage or dressing areas, parking lots, drinking fountains, recreation or entertainment areas, transportation, and housing facilities provided for employees which are segregated by explicit directive or are in fact segregated on the basis of race, color, religion, or national origin, because of habit, local custom, or otherwise. The Bidder agrees that (except where it has obtained identical certifications from proposed subcontractors for specific time periods) it will obtain identical certifications from proposed subcontractors prior to the award of subcontracts exceeding $10,000 which are not exempt from the provisions of the Equal Opportunity Clause, and that it will retain such certifications in its files.

Section 2. During the performance of this contract, the Contractor agrees as follows:

(a) The Contractor will not discriminate against any employee or applicant for employment because of race, color, religion, sex or national origin. The Contractor will take affirmative action to ensure that applicants are employed, and that employees are treated during employment without regard to their race, color, religion, sex or national origin. Such action shall include, but not be limited to, the following: employment, upgrading, demotion or transfer; recruitment or recruitment advertising; layoff or termination; rates of pay or other forms of compensation; and selection for training, including apprenticeship. The Contractor agrees to post in conspicuous places available to employees and applicants for employment, notices to be provided setting forth the provisions of this nondiscrimination clause.

(b) The Contractor will, in all solicitations or advertisements for employees placed by or on behalf of the Contractor, state that all qualified applicants shall receive consideration for employment without regard to race, color, religion, sex or national origin.

(c) The Contractor will send to each labor union or representative of workers with which the Bidder has a collective bargaining agreement or other contract or understanding, a notice to be provided advising the said labor union or workers' representative of the Contractor's commitments under this section, and shall post copies of the notice in conspicuous places available to employees and applicants for employment.

(d) The Contractor will comply with all provisions of Executive Order 11246 of September 24, 1965, and of the rules, regulations and relevant orders of the Secretary of Labor.

(e) The Contractor will furnish all information and reports required by Executive Order 11246 of September 24, 1965, and by rules, regulations and orders of the Secretary of Labor, or pursuant thereto, and will permit access to the Contractor's books, records and accounts by the administering agency and the Secretary of Labor for purposes of investigation to ascertain compliance with such rules, regulations and orders.

(f) In the event of the Contractor's noncompliance with the nondiscrimination clauses of this contract or with any of the said rules, regulations or orders, this contract may be canceled, terminated or suspended in whole or in part and the Contractor may be declared ineligible for further Government contracts or federally assisted construction contracts in accordance with procedures authorized in Executive Order 11246 of September 24, 1965, and such other sanctions as may be imposed and remedies invoked as provided in the said Executive Order 11246 of September 24, 1965, or by rule, regulation or order of the Secretary of Labor, or as otherwise provided by law.

(g) The Contractor will include the portion of the sentence immediately preceding paragraph (a) and the provisions of paragraphs (a) through (g) in every subcontract or purchase order unless exempted by rules, regulations or orders of the Secretary of Labor issued pursuant to Section 204 of Executive Order 11246 of September 24, 1965, so that such provisions will be binding upon each subcontractor or vendor. The Contractor will take such action with respect to any subcontract or purchase order as the administering agency may direct as a means of enforcing such provisions, including actions for noncompliance: *Provided, however,* that in the event a contractor becomes involved in, or is threatened with, litigation with a subcontractor or vendor as a result of such direction by the administering agency, the Contractor may request the United States to enter into such litigation to protect the interests of the United States.

Section 3. Equal Employment Opportunity Specifications.

(a) As used in these specifications:

''Covered area'' means the geographical area described in the solicitation from which this contract resulted;

''Director'' means Director, Office of Federal Contract Compliance Programs, United States Department of Labor, or any person to whom the Director delegates authority;

''Employer identification number'' means the Federal Social Security number used on the Employer's Quarterly Federal Tax Return, U.S. Treasury Department Form 941; and

''Minority'' includes:

(i) Black (all persons having origins in any of the Black African racial groups not of Hispanic origin);

(ii) Hispanic (all persons of Mexican, Puerto Rican, Cuban, Central or South American or other Spanish Culture or origin, regardless of race);

(iii) Asian and Pacific Islander (all persons having origins in any of the original peoples of the Far East, Southeast Asia, the Indian Subcontinent, or the Pacific Islands); and

(iv) American Indian or Alaskan Native (all persons having origins in any of the original peoples of North America and maintaining identifiable tribal affiliations through membership and participation or community identification).

(b) Whenever the Contractor, or any Subcontractor at any tier, subcontracts a portion of the work involving any construction trade, it shall physically include in each subcontract in excess of $10,000 the provisions of these specifications and the Notice which contains the applicable goals for minority and female participation and which is set forth in the solicitations from which this contract resulted.

(c) If the Contractor is participating (pursuant to 41 CFR 60–4.5) in a Hometown Plan approved by the U.S. Department of Labor in the covered area either individually or through an association, its affirmative action obligations on all work in the Plan area (including goals and timetables) shall be in accordance with that Plan for those trades which have unions participating in the Plan. Contractors must be able to demonstrate their participation in and compliance with the provisions of any such Hometown Plan. Each Contractor or Subcontractor participating in an approved Plan is individually required to comply with its obligations under the EEO clause, and to make a good faith effort to achieve each goal under the Plan in each trade in which it has employees. The overall good faith performance by other Contractors or Subcontractors toward a goal in an approved Plan does not excuse any covered Contractor's or Subcontractor's failure to take good faith efforts to achieve the Plan goals and timetables.

(d) The Contractor shall implement the specific affirmative action standards provided in paragraphs (g) (i) through (xvi) of these specifications. The goals set forth in the solicitation from which this contract resulted are expressed as percentages of the total hours of employment and training of minority and female utilization the Contractor should reasonably be able to achieve in each construction trade in which it has employees in the covered area. Covered construction contractors performing construction work in geographical areas where they do not have a federal or federally assisted construction contract shall apply the minority and female goals established for the geographical area where the work is being performed. Goals are published periodically in the FEDERAL REGISTER in notice form, and such notices may be obtained from any Office of Federal Contract Compliance Programs office or from Federal procurement contracting officers. The Contractor is expected to make substantially uniform progress in meeting its goals in each craft during the period specified.

(e) Neither the provisions of any collective bargaining agreement, nor the failure by a union with whom the Contractor has a collective bargaining agreement, to refer either minorities or women shall excuse the Contractor's obligations under these specifications, Executive Order 11246, or the regulations promulgated pursuant thereto.

(f) In order for the nonworking training hours of apprentices and trainees to be counted in meeting the goals, such apprentices and trainees must be employed by the Contractor during the training period, and the Contractor must have made a commitment to employ the apprentices and trainees at the completion of their training, subject to the availability of employment opportunities. Trainees must be trained pursuant to training programs approved by the U.S. Department of Labor.

(g) The Contractor shall take specific affirmative actions to ensure equal employment opportunity. The evaluation of the Contractor's compliance with these specifications shall be based upon its effort to achieve maximum results from its actions. The Contractor shall document these efforts fully, and shall implement affirmative action steps at least as extensive as the following:

(i) Ensure and maintain a working environment free of harassment, intimidation, and coercion at all sites, and in all facilities at which the Contractor's employees are assigned to work. The Contractor, where possible, will assign two or more women to each construction project. The Contractor shall specifically ensure that all foremen, superintendents, and other on-site supervisory personnel are aware of and carry out the Contractor's obligation to maintain such a working environment, with specific attention to minority or female individuals working at such sites or in such facilities.

(ii) Establish and maintain a current list of minority and female recruitment sources, provide written notification to minority and female recruitment sources and to community organizations when the Contractor or its unions have employment opportunities available, and maintain a record of the organizations' responses.

(iii) Maintain a current file of the names, addresses and telephone numbers of each minority and female off-the-street applicant and minority or female referral from a union, a recruitment source or community organization and of what action was taken with respect to each such individual. If such individual was sent to the union hiring hall for referral and was not referred back to the Contractor by the union or, if referred, not employed by the Contractor, this shall be documented in the file with the reason therefore, along with whatever additional actions the Contractor may have taken.

(iv) Provide immediate written notification to the Director when the union or unions with which the Contractor has a collective bargaining agreement has not referred to the Contractor a minority person or woman sent by the Contractor, or when the Contractor has other information that the union referral process has impeded the Contractor's efforts to meet its obligations.

(v) Develop on-the-job training opportunities and/or participate in training programs for the area which expressly include minorities and women, including upgrading programs and apprenticeship and trainee programs relevant to the Contractor's employment needs, especially those programs funded or approved by the Department of Labor. The Contractor shall provide notice of these

programs to the sources compiled under (g)(ii) above.

(vi) Disseminate the Contractor's EEO policy by providing notice of the policy to unions and training programs and requesting their cooperation in assisting the Contractor in meeting its EEO obligations; by including it in any policy manual and collective bargaining agreement; by publicizing it in the company newspaper, annual report, etc.; by specific review of the policy with all management personnel and with all minority and female employees at least once a year; and by posting the company EEO policy on bulletin boards accessible to all employees at each location where construction work is performed.

(vii) Review, at least annually, the company's EEO policy and affirmative action obligations under these specifications with all employees having any responsibility for hiring, assignment, layoff, termination or other employment decisions including specific review of these items with onsite supervisory personnel such as Superintendents, General Foremen, etc., prior to the initiation of construction work at any job site. A written record shall be made and maintained identifying the time and place of these meetings, persons attending, subject matter discussed, and disposition of the subject matter.

(viii) Disseminate the Contractor's EEO policy externally by including it in any advertising in the news media, specifically including minority and female news media, and providing written notification to and discussing the Contractor's EEO policy with other Contractors and Subcontractors with whom the Contractor does or anticipates doing business.

(ix) Direct its recruitment efforts, both oral and written, to minority, female and community organizations, to schools with minority and female students and to minority and female recruitment and training organizations serving the Contractor's recruitment area and employment needs. Not later than one month prior to the date for the acceptance of applications for apprenticeship or other training by any recruitment source, the Contractor shall send written notification to organizations such as the above, describing the openings, screening procedures, and tests to be used in the selection process.

(x) Encourage present minority and female employees to recruit other minority persons and women and, where reasonable, provide after school, summer and vacation employment to minority and female youth both on the site and in other areas of a Contractor's work force.

(xi) Validate all tests and other selection requirements where there is an obligation to do so under 41 CFR Part 60–3.

(xii) Conduct, at least annually, an inventory and evaluation at least of all minority and female personnel for promotional opportunities and encourage these employees to seek or to prepare for, through appropriate training, etc., such opportunities.

(xiii) Ensure that seniority practices, job classifications, work assignments and other personnel practices, do not have a discriminatory effect by continually monitoring all personnel and employment related activities to ensure that the EEO policy and the Contractor's obligations under these specifications are being carried out.

(xiv) Ensure that all facilities and company activities are nonsegregated except that separate or single-user toilet and necessary changing facilities shall be provided to assure privacy between the sexes.

(xv) Document and maintain a record of all solicitations of offers for subcontracts from minority and female construction contractors and suppliers, including circulation of solicitations to minority and female contractor associations and other business associations.

(xvi) Conduct a review, at least annually, of all supervisors' adherence to and performance under the Contractor's EEO policies and affirmative action obligations.

(h) Contractors are encouraged to participate in voluntary associations which assist in fulfilling one or more of their affirmative action obligations (g) (i) through (xvi). The efforts of a contractor association, joint contractor-union, contractor-community, or other similar group of which the Contractor is a member and participant, may be asserted as fulfilling any one or more of its obligations under (g) (i) through (xvi) of these specifications provided that the Contractor actively participates in the group, makes every effort to assure that the group has a positive impact on the employment of minorities and women in the industry, ensures that the concrete benefits of the program are reflected in the Contractor's minority and female workforce participation, makes a good faith effort to meet its individual goals and timetables, and can provide access to documentation which demonstrates the effectiveness of actions taken on behalf of the Contractor. The obligation to comply, however, is the Contractor's and failure of such a group to fulfill an obligation shall not be a defense for the Contractor's noncompliance.

(i) A single goal for minorities and a separate single goal for women have been established. The Contractor, however, is required to provide equal employment opportunity and to take affirmative action for all minority groups, both male and female, and all women, both minority and non-minority. Consequently, the Contractor may be in violation of Executive Order 11246 if a particular group is employed in a substantially disparate manner (for example, even though the Contractor has achieved its goals for women

generally, the Contractor may be in violation of Executive Order 11246 if a specific minority group of women is underutilized).

(j) The Contractor shall not use the goals and timetables or affirmative action standards to discriminate against any person because of race, color, religion, sex, or national origin.

(k) The Contractor shall not enter into any Subcontract with any person or firm debarred from Government contracts pursuant to Executive Order 11246.

(l) The Contractor shall carry out such sanctions and penalties for violation of these specifications and of the Equal Opportunity Clause, including suspension, termination and cancellation of existing subcontracts as may be imposed or ordered pursuant to Executive Order 11246, as amended, and its implementing regulations, by the Office of Federal Contract Compliance Programs. Any Contractor who fails to carry out such sanctions and penalties shall be in violation of these specifications and Executive Order 11246, as amended.

(m) The Contractor, in fulfilling its obligations under these specifications, shall implement specific affirmative action steps, at least as extensive as those standards prescribed in paragraph (g) of these specifications, so as to achieve maximum results from its efforts to ensure equal employment opportunity. If the Contractor fails to comply with the requirements of Executive Order 11246, the implementing regulations, or these specifications, the Director shall proceed in accordance with 41 CFR 60–4.8.

(n) The Contractor shall designate a responsible official to monitor all employment related activity to ensure that the company EEO policy is being carried out, to submit reports relating to the provisions hereof as may be required by the Government and to keep records. Records shall at least include for each employee the name, address, telephone numbers, construction trade, union affiliation if any, employee identification number when assigned, social security number, race, sex, status (e.g., mechanic, apprentice, trainee, helper, or laborer), dates of changes in status, hours worked per week in the indicated trade, rate of pay, and locations at which the work was performed. Records shall be maintained in an easily understandable and retrievable form; however, to the degree that existing records satisfy this requirement, contractors shall not be required to maintain separate records.

(o) Nothing herein provided shall be construed as a limitation upon the application of other laws which establish different standards of compliance or upon the application of requirements for the hiring of local or other area residents (e.g. those under the Public Works Employment Act of 1977 and the Community Development Block Grant Program).

Section 4. In this Article VI—

(a) The term ''Contractor'' shall also mean ''Bidder'' or ''Subcontractor'' as applicable.

(b) The provisions of sections 2 & 3 are applicable to the extent required by law. In determining whether these Sections are applicable, reference should be made to Office of Federal Contract Compliance Programs regulations (41 CFR part 60).

ARTICLE VII

MISCELLANEOUS

Section 1. Definitions.

The term ''Completion of the Contract'' shall mean accomplishment of Completion of the Project for all central offices (and associated remote switching terminals), features and services listed under Column 1, ''Project,'' in Article I, Section 1, and all alternates accepted by the Owner, on the Owner's Acceptance.

The term ''Completion of Installation'' shall mean full performance by the Bidder of the Bidder's obligation under the Contract and all amendments and revisions thereof, for a Project, except that it shall not include the acceptance tests nor performance of the Bidder's obligations in respect of (i) releases of lien and Certificate of Contractor under Article III, section 2, hereof and (ii) other final documents. The actual date of Completion of Installation shall be the date the Bidder submits to the Owner written notification that the Project is completed in conformance with the Specifications and ready for the Owner's acceptance inspection and tests as provided for under Article II, section 4.

The term ''Completion of the Project'' shall mean full performance by the Bidder of the Bidder's obligations herein set out and all amendments and revisions thereof for a central office (and all associated remote switching terminals), feature or service. The scheduled date for Completion of the Project is sixty (60) days after Completion of Installation as specified under Column 7, ''Completion of Installation,'' in Article I, section 1, as amended or adjusted under Article II, section 1, and section 4. The scheduled date for Completion of the Project is the date from which liquidated damages are computed. The actual date of Completion of the Project shall be the date of the receipt by the Owner from the Bidder of (a) all documents listed in Article III, section 2, (b) other final documents, and (c) written notification that all deficiencies listed on the RUS Form 517, Results of Acceptance Test, have been corrected; provided, that the final inspection and tests by the Owner finds the deficiencies satisfactorily resolved. If the deficiencies have not been satisfactorily resolved, the actual date of Completion of the Project shall be the date that the deficiencies are fully and satisfactorily resolved as determined by subsequent Owner's tests. The Certificate of

Completion approved and signed by the Owner and approved in writing by the Administrator shall be conclusive evidence as to the fact of Completion of the Project and the date thereof. Full compliance with the procedure for ''Completion of the Project'' and an individual Certificate of Completion is required for each Project listed under Column 1, ''Project,'' in Article I, section 1.

The Contract shall consist of the Notice and Instructions to Bidders, the Bidder's Proposal and the Owner's Acceptance, the Contractor's Bond and the Specifications.

The term ''days'' shall mean calendar days.

The term ''minor errors or irregularities'' shall mean a defect or variation in a Bidder's bid that is a matter of form and not of substance. Errors or irregularities are ''minor'' if they can be corrected or waived without being prejudicial to other Bidders and when they do not affect the price, quantity, quality, or timeliness of construction. Unless otherwise noted, the borrower determines whether an error or irregularity is ''minor.''

The term ''placed in service'' shall mean used by the Owner to earn revenue.

The term ''Project'' shall mean a central office and all associated remote switching terminals (if any), a remote switching terminal if purchased without a supporting central office, a feature (or group of features), or a service (or group of services), which is listed under Column 1, ''Project,'' in Article I, section 1. The only instance in which a remote switching terminal can constitute a separate Project is where such remote switching terminal is purchased with associated modifications to its supporting host switch but no other modifications to the host switch are specified. A Project will have a single completion schedule listed under Column 7, ''Completion of Installation,'' in Article I, section 1, and a single liquidated damages amount shown in Article V, section 2. The Contract may consist of one or more Projects.

The term ''Software'' shall mean computer programs contained on a tape, disc, semiconductor device or other memory device or system memory consisting of logic instructions and instruction sequences in machine-readable object code, which manipulate data in the central processor, control and perform input/output operations, perform error diagnostic and recovery routines, control call processing, and perform peripheral control, and administrative and maintenance functions; as well as associated documentation, excluding source code, used to describe, maintain and use the programs provided under the Contract.

The term ''Specifications'' shall mean the minimum performance requirements of the Owner as contained in the documents listed below, which are either attached or become a part of the Contract by reference, as amended by specific written exceptions contained in the Bidder's proposal and accepted by the Owner and the Administrator:

RUS Form _____, dated _____

RUS Form _____, dated _____

Section 2. Continuing Equipment Support—Parts, Service, and Software. In addition to warranty repairs and replacement, the Bidder shall offer repair service and repair parts to the Owner in accordance with the Bidder's practices and terms then in effect, for the Bidder's manufactured equipment furnished pursuant to this Agreement. Such repair service or repair parts shall be available for as long as the Bidder is manufacturing or stocking such equipment, or for no less than eight (8) years after the Bidder has ceased manufacturing or offering for sale such equipment. The Bidder shall also offer software support services to the Owner in accordance with the Bidder's practices, terms, and charges then in effect, but in any event for no less than five (5) years after the Bidder has ceased manufacturing or offering for sale such software.

Section 3. Materials and Supplies. The Bidder shall use only such unmanufactured articles, materials and supplies as have been mined or produced in the United States, Mexico or Canada and only such manufactured articles, materials and supplies as have been manufactured in the United States, Mexico or Canada substantially all from articles, materials or supplies mined, produced or manufactured, as the case may be, in the United States, Mexico or Canada; provided that foreign articles, materials or supplies may be used in the event and to the extent that the Administrator shall expressly authorize in writing such use pursuant to the provisions of the Rural Electrification Act of 1938, being Title IV of Public Resolution No. 122, 75th Congress, approved June 21, 1938. The Bidder agrees to submit to the Owner such certificate or certificates, signed by the Bidder and all subcontractors, with respect to compliance with the foregoing provision as the Administrator from time to time may require.

Section 4. Bond. The Bidder shall furnish to the Owner a Contractor's Bond in conformance with the requirements of 7 CFR part 1788, subpart C.

Section 5. Confidentiality. All information supplied by the Bidder to the Owner which bears a legend or notice restricting its use, copying, or dissemination, except insofar as it may be in the public domain through no acts attributable to the Owner, shall be treated by the Owner as confidential information, and the Owner shall not reproduce any such information except for its own internal use and as authorized by this Contract, and shall use any information only for archival backup, in-house training, operating, maintenance and administrative purposes and in conjunction with its use of the

equipment, materials and software furnished hereunder. All information supplied to the Bidder by the Owner which bears a legend or notice restricting its use, copying, or dissemination, except insofar as it may be in the public domain through no acts attributable to the Bidder, shall be treated by the Bidder as confidential information, and shall not be used by the Bidder for any purpose adverse to the interests of the Owner, and shall not be reproduced or distributed by the Bidder except for the Bidder's use in its performance under this Contract. The foregoing confidentiality obligations do not apply to information which is independently developed by the receiving party or which is lawfully received by the receiving party free of restriction from another source having a right to so furnish such information, or is already known to the receiving party at the time of disclosure free of restriction. If the Bidder has failed to provide continuing equipment support as described in Article VII, section 2, the Owner is released from this obligation. This provision does not restrict release of information by the United States of America pursuant to the Freedom of Information Act or other legal process.

Section 6. Entire Agreement. The terms and conditions of this Contract as approved by RUS supersede all prior oral or written understandings between the parties. There are no understandings or representations, expressed or implied, not expressly set forth herein.

Section 7. Survival of Obligations. The rights and obligations of the parties, which by their nature, would continue beyond the termination, cancellation, or expiration of this Contract, shall survive such termination or expiration.

Section 8. Non-Waiver. No waiver of any terms or conditions of this Contract, or the failure of either party to enforce strictly any such term or condition on one or more occasions, shall be construed as a waiver of the same or of any other terms or conditions of this Contract on any other occasion.

Section 9. Releases Void. Neither party shall require releases or waivers of any personal rights from representatives or employees of the other in connection with visits to its premises, nor shall such parties plead such releases or waivers in any action or proceeding.

Section 10. License. The Bidder shall comply with all applicable construction codes.

(a) The Bidder warrants that it possesses contractor's license number _____ issued to it by the State of _____ in which the project(s) is located, and said license expires on _____, 19___.

(b) The Bidder warrants that no license is required in the state in which the Project(s) is located.

(Bidder shall cross out that subsection that does not apply)

Section 11. Nonassignment of Contract. The Bidder shall not assign the Contract, effected by acceptance of this Proposal, or any part hereof, or enter into any contract with any person, firm or corporation, for the performance of the Bidder's obligations hereunder, or any part hereof, without the approval in writing of the Owner, the Surety, and the Administrator. However, the Bidder may subcontract the whole or any part of the installation work to be performed at the installation site, (as distinguished from furnishing and delivery of equipment and materials), provided that; (a) the Bidder shall remain responsible for the performance thereof and (b) the Bidder shall obtain the consent of the surety to such subcontract. A copy of such consent shall be submitted to the Owner and the Administrator.

Section 12. Choice of Law. The rights and obligations of the parties and all interpretations and performance of this Contract shall be governed in all respects by the laws of the State of _____ except for its rules with respect to the conflict of laws.

Section 13. Approval of the Administrator. The acceptance of this proposal by the Owner shall not create a contract unless such acceptance shall be approved in writing by the Administrator within ninety (90) days after the date hereof:

By _____

(Signature of Bidder)

_____

(Name—Type or Print)

_____

(Title) _____

(Company Name of Bidder)

_____

_____

(Address of Bidder)

Attest:

_____

(Secretary)

_____

(Date)

The Proposal must be signed with the full name of the Bidder. In the case of a partnership the Proposal must be signed in the firm name by each partner. In the case of a corporation the Proposal must be signed in the corporate name by a duly authorized officer and the Corporate seal affixed and attested by the Secretary of the Corporation.

(If executed by other than the President, a Vice-President, a partner or the individual owner, a power of attorney or other legally acceptable document authorizing execution shall accompany this contract, unless such power of attorney is on file with RUS.)

Acceptance

Subject to the approval of the Administrator, the Owner hereby accepts the Proposal of _____

_____

for the Project(s) herein described for the Total Base Bid of
$ _____ and

Alternate For:

Spare Parts, Item(s)	$ _____
Maintenance Tools, Item(s)	$ _____
Alternate No. 1 (add) (deduct)	$ _____
Alternate No. 2 (add) (deduct)	$ _____
Alternate No. 3 (add) (deduct)	$ _____
Alternate No. 4 (add) (deduct)	$ _____
Alternate No. 5 (add) (deduct)	$ _____
Alternate No. 6 (add) (deduct)	$ _____
The total contract price is	$ _____

By _____
OWNER
ATTEST: _____
PRESIDENT _____
SECRETARY

_____

DATE OF ACCEPTANCE

[End of clause]

(The information collection and recordkeeping requirements of this section have been approved by the Office of Management and Budget (OMB) under control number 0572–0059)

[59 FR 31126, June 17, 1994, as amended at 60 FR 1711, Jan. 5, 1995]

§§ 1755.526—1755.699 [Reserved]

§ 1755.700 RUS specification for aerial service wires.

§§ 1755.701 through 1755.704 cover the requirements for aerial service wires.

[61 FR 26074, May 24, 1996]

§ 1755.701 Scope.

(a) This section covers the requirements for aerial service wires intended for aerial subscriber drops.

(b) The aerial service wires can be either copper coated steel reinforced or nonmetallic reinforced designs.

(c) For the copper coated steel reinforced design, the reinforcing members are the conductors.

(1) The conductors are solid copper-covered steel wires.

(2) The wire structure is completed by insulating the conductors with an overall extruded plastic insulating compound.

(d) For the nonmetallic reinforced design, the conductors are solid copper individually insulated with an extruded solid insulating compound.

(1) The insulated conductors are either laid parallel (two conductor design only) or twisted into pairs (a star-quad configuration is permitted for two pair wires).

(2) The wire structure is completed by the application of nonmetallic reinforcing members and an overall plastic jacket.

(e) All wires sold to RUS borrowers for projects involving RUS loan funds under §§ 1755.700 through 1755.704 must be accepted by RUS Technical Standards Committee ''A'' (Telecommunications). For wires manufactured to the specification of §§ 1755.700 through 1755.704, all design changes to an accepted design must be submitted for acceptance. RUS will be the sole authority on what constitutes a design change.

(f) Materials, manufacturing techniques, or wire designs not specifically addressed by §§ 1755.700 through 1755.704 may be allowed if accepted by RUS. Justification for acceptance of modified materials, manufacturing techniques, or wire designs must be provided to substantiate product utility and long term stability and endurance.

[61 FR 26074, May 24, 1996]

§ 1755.702 Copper coated steel reinforced (CCSR) aerial service wire.

(a) *Conductors.* (1) Each conductor shall comply with the requirements specified in the American National Standard Institute/Insulated Cable Engineers Association, Inc. (ANSI/ICEA) S–89–648–1993, paragraphs 2.1 through 2.1.5. The ANSI/ICEA S–89–648–1993 Standard For Telecommunications Aerial Service Wire, Technical Requirements (approved by ANSI July 11, 1994) is incorporated by reference in accordance with 5 U.S.C. 552(a) and 1 CFR part 51. Copies of ANSI/ICEA S–89–648–1993 are available for inspection during normal business hours at RUS, room 2845, U.S. Department of Agriculture, Washington, DC 20250–1500 or at the Office of the Federal Register, 800 North Capitol Street, NW., suite 700, Washington, DC. Copies are available from ICEA, P. O. Box 440, South Yarmouth,

MA 02664, telephone number (508) 394–4424.

(2) Factory joints in conductors shall comply with the requirement specified in ANSI/ICEA S–89–648–1993, paragraph 2.1.6.

(b) *Conductor insulation.* (1) The raw materials used for the conductor insulation shall comply with the requirements specified in ANSI/ICEA S–89–648–1993, paragraph 3.1.1.

(2) The raw materials shall be accepted by RUS prior to their use.

(3) The finished conductor insulation shall be free from holes, splits, blisters, or other imperfections and shall be as smooth as is consistent with best commercial practice.

(4) The finished conductor insulation shall comply with the requirements specified in ANSI/ICEA S–89–648–1993, paragraphs 3.1.5 through 3.1.5.4.

(5) The insulation shall have a minimum spot thickness of not less than 0.9 millimeters (mm) (0.03 inches (in.)) at any point.

(c) *Wire assembly.* (1) The two conductors shall be insulated in parallel to form an integral configuration.

(2) The finished wire assembly shall be either a flat or a notched oval. Other finished wire assemblies may be used provided that they are accepted by RUS prior to their use.

(3) The overall dimensions of the finished wire assembly shall be in accordance with the following requirements:

Diameter	Dimensions	
	Minimum mm (in.)	Maximum mm (in.)
Major	5.5 (0.22)	8.0 (0.31)
Minor	3.0 (0.12)	5.0 (0.19)

(d) *Conductor marking.* The insulated conductors of a finished wire shall be marked in accordance with the requirements specified in ANSI/ICEA S–89–648–1993, paragraph 3.1.4.

(e) *Electrical requirements*—(1) *Conductor resistance.* The direct current (dc) resistance of each conductor in a completed CCSR aerial service wire shall comply with the requirement specified in ANSI/ICEA S–89–648–1993, paragraph 7.1.2.

(2) *Wet mutual capacitance.* The wet mutual capacitance of the completed CCSR aerial service wire shall comply with the requirement specified in ANSI/ICEA S–89–648–1993, paragraph 7.1.3.

(3) *Wet attenuation.* The wet attenuation of the completed CCSR aerial service wire shall comply with the requirement specified in ANSI/ICEA S–89–648–1993, paragraph 7.1.4.

(4) *Wet insulation resistance.* The wet insulation resistance of the completed CCSR aerial service wire shall comply with the requirement specified in ANSI/ICEA S–89–648–1993, paragraph 7.1.5.

(5) *Dielectric strength.* (i) The wet dielectric strength between conductors and between each conductor of the completed CCSR aerial service wire and the surrounding water shall comply with the requirement specified in ANSI/ICEA S–89–648–1993, paragraph 7.1.6.

(ii) The dry dielectric strength between conductors of the completed CCSR aerial service wire shall comply with the requirement specified in ANSI/ICEA S–89–648–1993, paragraph 7.1.7.

(6) *Fusing coordination.* The completed CCSR aerial service wire shall comply with the fusing coordination requirement specified in ANSI/ICEA S–89–648–1993, paragraph 7.1.8.

(7) *Insulation imperfections.* Each length of completed CCSR aerial service wire shall comply with the requirement specified in ANSI/ICEA S–89–648–1993, paragraph 7.1.9.

(f) *Mechanical requirements*—(1) *Impact test.* (i) All CCSR aerial service wires manufactured in accordance with this section shall comply with the unaged impact test specified in ANSI/ICEA S–89–648–1993, paragraph 8.1.2.

(ii) All CCSR aerial service wires manufactured in accordance with this section shall comply with the aged impact test specified in ANSI/ICEA S–89–648–1993, paragraph 8.1.3.

(2) *Abrasion resistance test.* All CCSR aerial service wires manufactured in accordance with this section shall comply with the abrasion resistance test specified in ANSI/ICEA S–89–648–1993, paragraph 8.1.4.

(3) *Static load test.* All CCSR aerial service wires manufactured in accordance with this section shall comply with the static load test specified in

ANSI/ICEA S–89–648–1993, paragraph 8.1.5.

(4) *Plasticizer compatibility test.* All CCSR aerial service wires manufactured in accordance with this section shall comply with the plasticizer compatibility test specified in ANSI/ICEA S–89–648–1993, paragraph 8.1.8.

(g) *Environmental requirements*—(1) *Cold temperature handling test.* (i) All CCSR aerial service wires manufactured in accordance with this section shall comply with the unaged cold temperature handling test specified in ANSI/ICEA S–89–648–1993, paragraph 8.2.1.

(ii) All CCSR aerial service wires manufactured in accordance with this section shall comply with the aged cold temperature handling test specified in ANSI/ICEA S–89–648–1993, paragraph 8.2.2.

(2) *Light absorption test.* All CCSR aerial service wires manufactured in accordance with this section shall comply with the light absorption test specified in ANSI/ICEA S–89–648–1993, paragraph 8.2.3.

(3) *Low temperature separation test.* All CCSR aerial service wires manufactured in accordance with this section shall comply with the low temperature separation test specified in ANSI/ICEA S–89–648–1993, paragraph 8.2.4.

(4) *Flammability test.* All CCSR aerial service wires manufactured in accordance with this section shall comply with the flammability test specified in ANSI/ICEA S–89–648–1993, paragraph 8.3.

(5) *Wire listing.* All CCSR aerial service wires manufactured in accordance with this section shall comply with the listing requirements specified in ANSI/ICEA S–89–648–1993, paragraph 8.4.

(h) *Identification marker.* Each length of CCSR aerial service wire shall be identified in accordance with ANSI/ICEA S–89–648–1993, paragraph 9.1.4. When surface marking is employed, the color of the initial marking shall be either white or silver.

(i) *Length marking (optional).* (1) Sequentially numbered length marking of the completed CCSR aerial service wire may be used at the option of the manufacturer unless specified by the end user.

(2) When sequentially numbered length markings are used, the length markings shall be in accordance with ANSI/ICEA S–89–648–1993, paragraph 9.1.5. The color of the initial marking shall be either white or silver.

(j) *Durability of marking.* The durability of the marking of the CCSR aerial service wire shall comply with the requirements specified in ANSI/ICEA S–89–648–1993, paragraph 9.1.6.

[61 FR 26075, May 24, 1996]

§ 1755.703 Nonmetallic reinforced (NMR) aerial service wire.

(a) *Conductors.* (1) Each conductor shall comply with the requirements specified in ANSI/ICEA S–89–648–1993, paragraphs 2.2 and 2.2.1. The ANSI/ICEA S–89–648–1993 Standard For Telecommunications Aerial Service Wire, Technical Requirements (approved by ANSI July 11, 1994) is incorporated by reference in accordance with 5 U.S.C. 552(a) and 1 CFR part 51. Copies of ANSI/ICEA S–89–648–1993 are available for inspection during normal business hours at RUS, room 2845, U.S. Department of Agriculture, Washington, DC 20250–1500 or at the Office of the FEDERAL REGISTER, 800 North Capitol Street, NW., suite 700, Washington, DC. Copies are available from ICEA, P. O. Box 440, South Yarmouth, MA 02664, telephone number (508) 394–4424.

(2) Factory joints made in the conductors during the manufacturing process shall comply with the requirement specified in ANSI/ICEA S–89–648–1993, paragraph 2.2.2.

(b) *Conductor insulation.* (1) The raw materials used for the conductor insulation shall comply with the requirements specified in ANSI/ICEA S–89–648–1993, paragraphs 3.2 through 3.2.2.

(2) The finished conductor insulation shall comply with the requirements specified in ANSI/ICEA S–89–648–1993, paragraph 3.2.3.

(3) The dimensions of the insulated conductors shall comply with the requirements specified in ANSI/ICEA S–89–648–1993, paragraph 3.2.3.1.

(4) The colors of the insulation shall comply with the requirements specified in ANSI/ICEA S–89–648–1993, paragraph 3.2.3.2.

(5) A permissible overall performance level of faults in conductor insulation shall comply with the requirement specified in ANSI/ICEA S–89–648–1993,

paragraph 3.2.4.6. The length count and number of faults shall be recorded. The information shall be retained for a period of 6 months and be available for review by RUS when requested.

(6) Repairs to the conductor insulation during manufacture are permissible. The method of repair shall be accepted by RUS prior to its use. The repaired insulation shall comply with the requirement specified in ANSI/ICEA S–89–648–1993, paragraph 3.2.3.3.

(7) All repaired sections of insulation shall be retested in the same manner as originally tested for compliance with paragraph (b)(5) of this section.

(8) The colored insulating material removed from or tested on the conductor, from a finished wire shall comply with the requirements specified in ANSI/ICEA S–89–648–1993, paragraphs 3.2.4 through 3.2.4.5.

(c) *Identification of pairs and layup of pairs.* (1) The insulation shall be colored coded to identify:

(i) The tip and ring conductor of each pair; and

(ii) Each pair in the completed wire.

(2) The colors to be used in the pairs together with the pair numbers shall be in accordance with the table specified in ANSI/ICEA S–89–648–1993, paragraph 4.1.1.

(3) The insulated conductors shall be either layed parallel (two conductor design only) or twisted into pairs.

(4) When using parallel conductors for the two conductor design, the parallel conductors shall be designed to enable the wire to meet the electrical requirements specified in paragraph (g) of this section.

(5) When twisted pairs are used, the following requirements shall be met:

(i) The pair twists shall be designed to enable the wire to meet the electrical requirements specified in paragraph (g) of this section; and

(ii) The average length of pair twists in any pair in the finished wire, when measured on any 3 meter (10 foot) length, shall not exceed the requirement specified in ANSI/ICEA S–89–648–1993, paragraph 4.1.

(6) An alternative method of forming the two-pair wire is the use of a star-quad configuration.

(i) The assembly of the star-quad shall be such as to enable the wire to meet the electrical requirements specified in paragraph (g) of this section.

(ii) The star-quad configuration shall be assembled in accordance with ANSI/ICEA S–89–648–1993, paragraph 4.1.2.

(iii) The average length of twist for the star-quad in the finished wire, when measured on any 3 meter (10 foot) length, shall not exceed the requirement specified in ANSI/ICEA S–89–648–1993, paragraph 4.1.

(iv) The color scheme used to provide identification of the tip and ring conductors of each pair in the star-quad shall comply with the table specified in ANSI/ICEA S–89–648–1993, paragraph 4.1.2.

(d) *Strength members.* The strength members shall comply with the requirements specified in ANSI/ICEA S–89–648–1993, paragraphs 6.1 and 6.1.1.

(e) *Wire jacket.* (1) The jacket shall comply with the requirements specified in ANSI/ICEA S–89–648–1993, paragraphs 5.1 and 5.1.1.

(2) The jacket raw materials shall be accepted by RUS prior to their use.

(f) *Wire assembly.* The finished wire assembly shall be in accordance with ANSI/ICEA S–89–648–1993, paragraph 5.1.3 and Figure 5–1.

(g) *Electrical requirements.*—(1) *Conductor resistance.* The dc resistance of each conductor in a completed NMR aerial service wire shall comply with the requirement specified in ANSI/ICEA S–89–648–1993, paragraph 7.2.2.

(2) *Resistance unbalance.* (i) The dc resistance unbalance between the two conductors of any pair in a completed NMR aerial service wire and the average resistance unbalance of all pairs in a Quality Control Lot shall comply with the requirements specified in ANSI/ICEA S–89–648–1993, paragraph 7.2.3.

(ii) The resistance unbalance between tip and ring conductors shall be random with respect to the direction of unbalance. That is, the resistance of the tip conductors shall not be consistently higher with respect to the ring conductors and vice versa.

(3) *Dry mutual capacitance.* The dry mutual capacitance of the completed NMR aerial service wire shall comply with the requirements specified in ANSI/ICEA S–89–648–1993, paragraph 7.2.4, Type 1.

(4) *Pair-to-pair capacitance unbalance.* The pair-to-pair capacitance unbalance as measured on the completed NMR aerial service wire shall comply with the requirements specified in ANSI/ICEA S–89–648–1993, paragraph 7.2.5.

(5) *Attenuation.* (i) The dry attenuation of the completed NMR aerial service wire shall comply with the requirement specified in ANSI/ICEA S–89–648–1993, paragraph 7.2.7.

(ii) The wet attenuation of the completed NMR aerial service wire shall comply with the requirement specified in ANSI/ICEA S–89–648–1993, paragraph 7.2.8.

(6) *Insulation resistance.* (i) The dry insulation resistance of the completed NMR aerial service wire shall comply with the requirement specified in ANSI/ICEA S–89–648–1993, paragraph 7.2.9.

(ii) The wet insulation resistance of the completed NMR aerial service wire shall comply with the requirement specified in ANSI/ICEA S–89–648–1993, paragraph 7.2.10.

(7) *Wet dielectric strength.* The wet dielectric strength between conductors and between each conductor of the completed NMR aerial service wire and the surrounding water shall comply with the requirement specified in ANSI/ICEA S–89–648–1993, paragraph 7.2.11.

(8) *Fusing coordination.* The completed NMR aerial service wire shall comply with the fusing coordination requirement specified in ANSI/ICEA S–89–648–1993, paragraph 7.2.13.

(9) *Crosstalk loss.* (i) The output-to-output far-end crosstalk loss (FEXT) for any pair of completed NMR aerial service wire shall comply with the requirement specified in ANSI/ICEA S–89–648–1993, paragraph 7.2.14.

(ii) The input-to-input near-end crosstalk loss (NEXT) for any pair of completed NMR aerial service wire shall comply with the requirement specified in ANSI/ICEA S–89–648–1993, paragraph 7.2.14.

(h) *Mechanical requirements*—(1) *Impact test.* (i) All NMR aerial service wires manufactured in accordance with this section shall comply with the unaged impact test specified in § 1755.702(f)(1)(i).

(ii) All NMR aerial service wires manufactured in accordance with this section shall comply with the aged impact test specified in § 1755.702(f)(1)(ii).

(2) *Abrasion resistance test.* All NMR aerial service wires manufactured in accordance with this section shall comply with the abrasion resistance test specified in § 1755.702(f)(2).

(3) *Static load test.* All NMR aerial service wires manufactured in accordance with this section shall comply with the static load test specified in § 1755.702(f)(3).

(4) *Elongation test.* All NMR aerial service wires manufactured in accordance with this section shall comply with the elongation test specified in ANSI/ICEA S–89–648–1993, paragraph 8.1.7.

(5) *Plasticizer compatibility test.* All NMR aerial service wires manufactured in accordance with this section shall comply with the plasticizer compatibility test specified in § 1755.702(f)(4).

(i) *Environmental requirements*—(1) *Cold temperature handling test.* (i) All NMR aerial service wires manufactured in accordance with this section shall comply with the unaged cold temperature handling test specified in § 1755.702(g)(1)(i).

(ii) All NMR aerial service wires manufactured in accordance with this section shall comply with the aged cold temperature handling test specified in § 1755.702(g)(1)(ii).

(2) *Light absorption test.* All NMR aerial service wires manufactured in accordance with this section shall comply with the light absorption test specified in § 1755.702(g)(2).

(3) *Flammability test.* All NMR aerial service wires manufactured in accordance with this section shall comply with the flammability test specified in § 1755.702(g)(4).

(4) *Wire listing.* All NMR aerial service wires manufactured in accordance with this section shall comply with the listing requirements specified in § 1755.702(g)(5).

(j) *Ripcord (optional).* (1) A ripcord may be used in the NMR aerial service wire structure at the option of the manufacturer unless specified by the end user.

(2) When a ripcord is used it shall comply with the requirements specified

in ANSI/ICEA S–89–648–1993, paragraphs 4.2 through 4.2.3.

(k) *Identification marker.* Each length of NMR aerial service wire shall be identified in accordance with ANSI/ICEA S–89–648–1993, paragraphs 9.1 through 9.1.4. When surface marking is employed, the color of the initial marking shall be either white or silver.

(l) *Length marking (optional).* (1) Sequentially numbered length marking of the completed NMR aerial service wire may be used at the option of the manufacturer unless specified by the end user.

(2) When sequentially numbered length markings are used, the length markings shall be in accordance with in accordance with §1755.702(i)(2).

(m) *Durability of marking.* The durability of the marking of the NMR aerial service wire shall comply with the requirements specified in §1755.702(j).

[61 FR 26076, May 24, 1996]

§1755.704 Requirements applicable to both CCSR and NMR aerial service wires.

(a) *Acceptance testing.* (1) The tests described in §§1755.700 through 1755.704 are intended for acceptance of wire designs and major modifications of accepted designs. What constitutes a major modification is at the discretion of RUS. These tests are intended to show the inherent capability of the manufacturer to produce wire products having long life and stability.

(2) For initial acceptance, the manufacturer shall:

(i) Certify that the product fully complies with each paragraph in §§1755.700 through 1755.704;

(ii) Agree to periodic plant inspections by RUS;

(iii) Certify whether the product complies with the domestic origin manufacturing provisions of the ''Buy American'' requirements of the Rural Electrification Act of 1938 (7 U.S.C. 903 note), as amended (the ''REA Buy-American provision'');

(iv) Submit at least three written user testimonials concerning field performance of the product; and

(v) Provide any other nonpropriety data deemed necessary by the Chief, Outside Plant Branch (Telecommunications).

(3) In order for RUS to consider a manufacturer's request that a product be requalified, the manufacturer shall certify not later than June 30 of the year in which requalification is required, that the product:

(i) Fully complies with each paragraph in §§1755.700 through 1755.704; and

(ii) Does or does not comply with the domestic origin manufacturing provisions of the REA Buy American provisions.The required certifications shall be dated within 90 days of the submission.

(4) Initial and requalification acceptance requests should be addresses to: Chairman, Technical Standards Committee ''A'' (Telecommunications), Telecommunications Standards Division, Rural Utilities Service, AG Box 1598, Washington, DC 20250–1598.

(b) *Extent of testing*—(1) *Tests on 100 percent of completed wire.* (i) Each conductor in the completed CCSR and NMR aerial service wire shall be tested for continuity in accordance with ANSI/ICEA S–89–648–1993, paragraphs 7.1.1 and 7.2.1, respectively. The ANSI/ICEA S–89–648–1993 Standard For Telecommunications Aerial Service Wire, Technical Requirements (approved by ANSI July 11, 1994) is incorporated by reference in accordance with 5 U.S.C. 552(a) and 1 CFR part 51. Copies of ANSI/ICEA S–89–648–1993 are available for inspection during normal business hours at RUS, room 2845, U.S. Department of Agriculture, Washington, DC 20250–1500 or at the Office of the Federal Register, 800 North Capitol Street, NW., suite 700, Washington, DC. Copies are available from ICEA, P. O. Box 440, South Yarmouth, MA 02664, telephone number (508) 394–4424.

(ii) Each conductor in the completed CCSR and NMR aerial service wire shall be tested for shorts in accordance with ANSI/ICEA S–89–648–1993, paragraphs 7.1.1 and 7.2.1, respectively.

(iii) Each length of completed CCSR and NMR aerial service wire shall be tested for insulation imperfections in accordance with §1755.702(e)(7) and §1755.703(b)(5), respectively.

(2) *Capability tests.* Tests on a quality assurance basis shall be made as frequently as is required for each manufacturer to determine and maintain compliance with:

(i) Performance of the conductors;

(ii) Performance of the conductor insulation and jacket material;

(iii) Sequential marking and lettering;

(iv) Mutual capacitance, capacitance unbalance, attenuation, and crosstalk;

(v) Conductor resistance, resistance unbalance, and insulation resistance;

(vi) Dielectric strength and fusing coordination;

(vii) Impact, abrasion, static load, elongation, and plasticizer compatibility tests; and

(viii) Cold temperature handling, light absorption, low temperature separation, and flammability tests.

(c) *Summary of records of electrical and physical tests.* (1) Each manufacturer shall maintain suitable summary records for a period of at least 3 years of all electrical and physical tests required on completed wire as set forth in paragraph (b) of this section. The test data for a particular lot of aerial service wire shall be in a form such that it may be readily available to the purchaser or to RUS upon request.

(2) Measurements and computed values shall be rounded off to the number of places or figures specified for the requirement according to ANSI/ICEA S–89–648–1993, paragraph 1.3.

(d) *Manufacturing irregularities.* (1) Repairs to the insulation of CCSR aerial service wires are not permitted in wires supplied to end users under §§ 1755.700 through 1755.704.

(2) Repairs to the jacket of NMR aerial service wires are not permitted in wires supplied to end users under §§ 1755.700 through 1755.704.

(e) *Splicing.* Splicing of completed CCSR and NMR aerial service wires shall comply with the requirement specified in ANSI/ICEA S–89–648–1993, paragraph 8.1.1.

(f) *Preparation for shipment.* (1) CCSR and NMR aerial service wire shall be shipped either in coils or on reels.

(2) When CCSR and NMR aerial service wires are shipped on reels the following provisions shall apply:

(i) The diameter of the drum shall be large enough to prevent damage to the wire from reeling or unreeling. The reels shall be substantial and so constructed as to prevent damage to the wire during shipment and handling;

(ii) A waterproof corrugated board or other suitable means of protection accepted by RUS prior to its use may be applied to the reel. If the waterproof corrugated board or other suitable material is used for protection, it shall be suitably secured in place to prevent damage to the wire during storage and handling. The use of the waterproof corrugated board or other suitable means of protection shall be at the option of the manufacturer unless specified by the end user;

(iii) The outer end of the wire shall be securely fastened to the reel head so as to prevent the wire from becoming loose in transit. The inner end of the wire shall be securely fastened in such a way as to make it readily available if required for electrical testing. Spikes, staples, or other fastening devices which penetrate the conductor insulation of the CCSR aerial service wire and the jacket of the NMR aerial service wire shall not be used. The method of fastening the wire ends shall be accepted by RUS prior to their use;

(iv) Each length of wire shall be wound on a separate reel;

(v) Each reel shall be plainly marked to indicate the direction in which it should be rolled to prevent loosening of the wire on the reel; and

(vi) Each reel shall be stenciled or labeled on either one or both sides with the following information:

(A) Customer order number;

(B) Manufacturer's name and product code;

(C) Factory reel number and year of manufacture;

(D) Gauge of conductors and pair size of wire;

(E) Length of wire; and

(F) RUS designation letter ''K.''

(3) When CCSR and NMR aerial service wires are shipped in coils the following provisions shall apply:

(i) The diameter of the coil shall be large enough to prevent damage to the wire from coiling or uncoiling;

(ii) The nominal length of the wire in a coil shall be 305 meters (1,000 feet). No coil shall be less than 290 meters (950 feet) long or more than 460 meters (1,500 feet) long; however, 25 percent of the total number of coils may be less than 305 meters (1,000 feet);

(iii) The coils of wire shall be wound securely with strong tape in four separate evenly spaced places;

(iv) The coils may be protected from damage by wrapping the coil with heavy paper, burlap, or other suitable material accepted by RUS prior to its use. The use of the heavy paper, burlap, or other suitable means of protection shall be at the option of the manufacturer unless specified by the end user; and

(v) Each coil shall be tagged with the following information:

(A) Customer order number;

(B) Manufacturer's name and product code;

(C) Year of manufacture;

(D) Gauge of conductors and pair size of wire;

(E) Length of wire; and

(F) RUS designation letter ''K.''

(4) In lieu of wrapping the coil with heavy paper, burlap, or other suitable material, the coil may be packaged in a moisture resistant carton.

(5) When the coils are shipped in moisture resistant cartons, each carton shall be marked with the information specified in paragraphs (f)(3)(v)(A) through (f)(3)(v)(F) of this section.

(6) Other methods of shipment may be used if accepted by RUS prior to their use.

(7) When NMR aerial service wire is shipped, the ends of the wire shall be sealed in accordance with ANSI/ICEA S–89–648–1993, paragraph 9.2.

[61 FR 26077, May 24, 1996]

§§1755.705—1755.859 [Reserved]

§1755.860 RUS specification for filled buried wires.

(a) *Scope.* (1) This section covers the requirements for filled buried wires intended for direct burial as a subscriber drop and/or distribution wire.

(i) The conductors are solid copper, individually insulated with an extruded solid insulating compound.

(ii) The insulated conductors are twisted into pairs (a star-quad configuration is permitted for the two pair wires) which are then stranded or oscillated to form a cylindrical core.

(iii) A moisture resistant filling compound is applied to the stranded conductors completely covering the insulated conductors and filling the interstices between the pairs.

(iv) The wire structure is completed by the application of an optional core wrapping material, an inner jacket, a flooding compound, a shield, a flooding compound, and an overall plastic jacket.

(2) The number of pairs and gauge size of conductors which are used within the RUS program are provided in the following table:

American Wire Gauge (AWG)	22	24
Pairs	2	2
	3	3

(3) All wires sold to RUS borrowers for projects involving RUS loan funds under this section must be accepted by RUS Technical Standards Committee ''A'' (Telephone). For wires manufactured to the specification of this section, all design changes to an accepted design must be submitted for acceptance. RUS will be the sole authority on what constitutes a design change.

(4) Materials, manufacturing techniques, or wire designs not specifically addressed by this section may be allowed if accepted by RUS. Justification for acceptance of modified materials, manufacturing techniques, or wire designs must be provided to substantiate product utility and long term stability and endurance.

(5) The American National Standards Institute/Electronic Industries Association (ANSI/EIA) 359-A-84, EIA Standard Colors for Color Identification and Coding, referenced in this section is incorporated by reference by RUS. This incorporation by reference was approved by the Director of the Federal Register in accordance with 5 U.S.C. 552(a) and 1 CFR part 51. Copies of ANSI/EIA 359-A-84 are available for inspection during normal business hours at RUS, room 2845, U.S Department of Agriculture, Washington, DC 20250–1500 or at the Office of the Federal Register, 800 North Capitol Street, NW., suite 700, Washington, DC. Copies are available from EIA, 2001 Pennsylvania Avenue, NW., suite 900, Washington, DC 20006, telephone number (202) 457–4966.

(6) American Society for Testing and Materials specifications (ASTM) A 505–87, Standard Specification for Steel,

Sheet and Strip, Alloy, Hot-Rolled and Cold-Rolled, General Requirements for; ASTM B 3–90, Standard Specification for Soft or Annealed Copper Wire; ASTM B 193–87, Standard Test Method for Resistivity of Electrical Conductor Materials; ASTM B 224–91, Standard Classification of Coppers; ASTM B 694–86, Standard Specification for Copper, Copper Alloy, and Copper-Clad Stainless Steel Sheet and Strip for Electrical Cable Shielding; ASTM D 150–87, Standard Test Methods for A-C Loss Characteristics and Permittivity (Dielectric Constant) of Solid Electrical Insulating Materials; ASTM D 257–91, Standard Test Methods for D-C Resistance or Conductance of Insulating Materials; ASTM D 1238–90b, Standard Test Method for Flow Rates of Thermoplastics by Extrusion Plastometer; ASTM D 1248–84(1989), Standard Specification for Polyethylene Plastics Molding and Extrusion Materials; ASTM D 1535–89, Standard Test Method for Specifying Color by the Munsell System; ASTM D 3349–86, Standard Test Method for Absorption Coefficient of Carbon Black Pigmented Ethylene Plastic; ASTM D 4101–82(1988), Standard Specification for Propylene Plastic Injection and Extrusion Materials; ASTM D 4565–90a, Standard Test Methods for Physical and Environmental Performance Properties of Insulations and Jackets for Telecommunications Wire and Cable; ASTM D 4566–90, Standard Test Methods for Electrical Performance Properties of Insulations and Jackets for Telecommunications Wire and Cable; ASTM D 4568–86, Standard Test Methods for Evaluating Compatibility between Cable Filling and Flooding Compounds and Polyolefin Cable Materials; ASTM D 4872–88, Standard Test Method for Dielectric Testing of Wire and Cable Filling Compounds; ASTM E 8–91, Standard Test Methods of Tension Testing of Metallic Materials; and ASTM E 29–90, Standard Practice for Using Significant Digits in Test Data to Determine Conformance with Specifications, referenced in this section are incorporated by reference by RUS. These incorporations by references were approved by the Director of the Federal Register in accordance with 5 U.S.C. 552(a) and 1 CFR part 51. Copies of the ASTM standards are available for inspection during normal business hours at RUS, room 2845, U.S. Department Agriculture, Washington, DC 20250–1500 or at the Office of the Federal Register, 800 North Capitol Street, NW., suite 700, Washington, DC. Copies are available from ASTM, 1916 Race Street, Philadelphia, Pennsylvania 19103–1187, telephone number (215) 299–5585.

(b) *Conductors and conductor insulation.* (1) Each conductor must be a solid round wire of commercially pure annealed copper. Conductors must meet the requirements of the American Society for Testing and Materials (ASTM) B 3–90 except that requirements for *Dimensions and Permissible Variations* are waived and elongation requirements are superseded by this section.

(2) The minimum conductor elongation in the final wire must comply with the following limits when tested in accordance with ASTM E 8–91.

Conductor—AWG	Minimum Elongation—Percent
22	20
24	16

(3) Joints made in conductors during the manufacturing process may be brazed, using a silver alloy solder and nonacid flux, or they may be welded using either an electrical or cold welding technique. In joints made in uninsulated conductors, the two conductor ends must be butted. Splices made in insulated conductors need not be butted but may be joined in a manner acceptable to RUS.

(4)(i) The tensile strength of any section of a conductor containing a factory joint must not be less than 85 percent of the tensile strength of an adjacent section of the solid conductor of equal length without a joint.

(ii) *Engineering Information:* The sizes of wire used and their nominal diameters shall be as shown in the following table:

AWG	Nominal Diameter	
	Millimeters (mm)	(Inches (in.))
22	0.643	(0.0253)
24	0.511	(0.0201)

(5) Each conductor must be insulated with either a colored, solid, insulating grade, high density polyethylene or crystalline propylene/ethylene copolymer or with a solid natural primary layer and a colored, solid outer skin using one of the insulating materials listed in paragraphs (b)(5)(i) through (b)(5)(ii) of this section.

(i) The polyethylene raw material selected to meet the requirements of this section must be Type III, Class A, Category 4 or 5, Grade E9, in accordance with ASTM D 1248–84(1989).

(ii) The crystalline propylene/ethylene raw material selected to meet the requirements of this section must be Class PP 200B 40003 E11 in accordance with ASTM D 4101–82(1988).

(iii) Raw materials intended as conductor insulation furnished to these requirements must be free from dirt, metallic particles, and other foreign matter.

(iv) All insulating raw materials must be accepted by RUS prior to their use.

(6) All conductors in any single length of wire must be insulated with the same type of material.

(7) A permissible overall performance level of faults in conductor insulation must average not greater than one fault per 12,000 conductor meters (40,000 conductor feet) for each gauge of conductor.

(i) All insulated conductors must be continuously tested for insulation faults during the twinning operation with the method of test acceptable to RUS. The length count and number of faults must be recorded. The information must be retained for a period of 6 months and be available for review by RUS when requested.

(ii) The voltages for determining compliance with the requirements of this section are as follows:

AWG	Direct Current Voltages (Kilovolts)
22	6.0
24	5.0

(8) Repairs to the conductor insulation during manufacturing are permissible. The method of repair must be accepted by RUS prior to its use. The repaired insulation must be capable of meeting the relevant electrical requirements of this section.

(9) All repaired sections of insulation must be retested in the same manner as originally tested for compliance with paragraph (b)(7) of this section.

(10) Colored insulating material removed from or tested on the conductor, from a finished wire, must be capable of meeting the following performance requirements:

Property	Polyethylene	Crystalline Propylene/Ethylene Copolymer
Melt Flow Rate		
Percent increase from raw material, Maximum.		
<0.5 (Initial Melt Index).	50	—
0.5–2.00 (Initial Melt Index).	25	—
≤5.0 (Initial Melt Index).	—	110
Tensile Strength—Minimum		
Megapascals (MPa).	16.5	21.0
(Pounds per Square Inch (psi)).	(2,400)	(3,000)
Ultimate Elongation		
Minimum, Percent.	300	300
Cold Bend		
Failures, Maximum.	0/10	0/10
Shrinkback		
Maximum, mm (in.).	10 (0.375)	10 (0.375)
Oxygen Induction Time		
Minimum, Minutes.	20	20

(11) *Testing procedures.* The procedures for testing the insulation samples for compliance with paragraph (b)(10) of this section must be as follows.

(i) *Melt flow rate.* The melt flow rate must be determined as described in ASTM D 1238–90b. Condition E must be used for polyethylene. Condition L must be used for crystalline propylene/ethylene copolymer. The melt flow test must be conducted prior to the filling operation.

(ii) *Tensile strength and ultimate elongation.* Samples of the insulation material, removed from the conductor, must be tested in accordance with ASTM D 4565–90a using the following conditions. The minimum length of unclamped specimen must be 50 mm (2.0 in.). The minimum speed of jaw separation must be 25 mm (1.0 in.) per minute per 25 mm (1.0 in.) of unclamped specimen. The temperature of specimens and surrounding shall be 23 ± 1° C.

NOTE: Quality assurance testing at a jaw separation speed of 500 mm/min (20 in./min) is permissible. Failures at this rate must be retested at the 50 mm/min (2 in./min) rate to determine section compliance.

(iii) *Cold bend.* Samples of the insulation material on the conductor must be tested in accordance with ASTM D 4565–90a at a temperature of −40 ± 1° C with a mandrel diameter equal to 3 times the outside diameter of the insulated conductor. There must be no cracks visible to normal or corrected-to-normal vision.

(iv) *Shrinkback.* Samples of insulation must be tested for four hours in accordance with ASTM D 4565–90a. The temperature for the type of material is listed as follows:

Material	Temperature
Polyethylene	115 ± 1° C
Crystalline propylene/ethylene Copolymer	130 ± 1° C

(v) *Oxygen induction time.* Samples of insulation, which have been conditioned in accordance with paragraph 17.3 of ASTM D 4565–90a, must be tested in accordance with the procedures of ASTM D 4565–90a using copper pans and a test temperature of 199 ± 1° C.

(12) Other methods of testing may be used if acceptable to RUS.

(c) *Identification of pairs and twisting of pairs.* (1) The insulation must be colored to identify:

(i) The tip and ring conductor of each pair; and

(ii) Each pair in the completed wire.

(2) The colors to be used to provide identification of the tip and ring conductor of each pair are shown in the following table:

Pair No.	Color	
	Tip	Ring
1	White	Blue
2	White	Orange
3	White	Green

(3) *Standards of color.* The colors of the insulated conductors supplied in accordance with this section are specified in terms of the Munsell Color System (ASTM D 1535–89) and must comply with the ''Table of Wire and Cable Limit Chips'' as defined in ANSI/EIA-359-A-84. (Visual color standards meeting these requirements may be obtained directly from the Munsell Color Company, Inc., 2441 North Calvert Street, Baltimore, Maryland 21218).

(4) Positive identification of the tip and ring conductors of each pair by marking each conductor of a pair with the color of its mate is permissible. The method of marking must be accepted by RUS prior to its use.

(5) Other methods of providing positive identification of the tip and ring conductors of each pair may be employed if accepted by RUS prior to its use.

(6) The insulated conductors must be twisted into pairs.

(7) In order to provide sufficiently high crosstalk isolation, the pair twists must be designed to enable the wire to meet the capacitance unbalance and the crosstalk loss requirements of paragraphs (m)(2), (m)(3), and (m)(4) of this section.

(8) The average length of pair twists in any pair in the finished wire, when measured on any 3 meter (m) (10 foot(ft)) length, must not exceed 152 mm (6 in.).

(9) An alternative method of forming the two pair wire is the use of a star-quad configuration.

(i) The assembly of the star-quad must be such as to enable the wire to meet the capacitance unbalance and the crosstalk loss requirements of paragraphs (m)(2), (m)(3), and (m)(4) of this section.

(ii) The four individual insulated conductors must be twisted together to form a star-quad configuration with the tip and ring conductors of each pair diagonally opposite each other in the quad.

(iii) The average length of twist for the star-quad in the finished wire, when measured on any 3 m (10 ft) length, must not exceed 152 mm (6 in.).

(iv) The following color scheme must be used to provide identification of the tip and ring conductor of each pair in the star-quad:

Pair No.	Color	
	Tip	Ring
1	White with blue stripe.	Blue
2	White with orange stripe.	Orange

(v) If desired, the blue and orange conductors may contain a white stripe. The stripes in this case must be narrow enough so that the tip and ring identification is obvious.

(d) *Forming of the wire core.* (1) Twisted pairs or star-quad configuration must be assembled in such a way as to form a substantially cylindrical group.

(2) The filling compound must be applied to the wire core in such a way as to provide a completely filled core as is commercially practical.

(3) If desired for manufacturing reasons, white or colored binders of nonhygroscopic and nonwicking material may be applied over the core.

(e) *Filling compound.* (1) After or during the stranding operation and prior to application of the optional core wrap and inner jacket, a homogeneous filling compound free of agglomerates must be applied to the wire core. The compound must be as nearly colorless as is commercially feasible and consistent with the end product requirements and pair identification.

(2) The filling compound must be free from dirt, metallic particles, and other foreign matter. It must be applied in such a way as to fill the space within the wire core.

(3) The filling compound must be nontoxic and present no dermal hazards.

(4) The filling compound must exhibit the following dielectric properties at a temperature of 23 ± 3° C when measured in accordance with ASTM D 150–87 or ASTM D 4872–88.

(i) The dissipation factor must not exceed 0.0015 at a frequency of 1 megahertz (MHz).

(ii) The dielectric constant must not exceed 2.30.

(5) The volume resistivity must not be less than 10^{12} ohm-cm at a temperature of 23 ± 3° C when measured in accordance with ASTM D 257–91 or ASTM D 4872–88.

(6) The individual wire manufacturer must satisfy RUS that the filling compound selected for use is suitable for its intended application. The filling compound must be compatible with the wire components when tested in accordance with ASTM D 4568–86 at a temperature of 80° C.

(f) *Core wrap (optional).* (1) When a core wrap is used, it must consist of a layer of nonhygroscopic and nonwicking dielectric material. The wrap must be applied with an overlap.

(2) The core wrap must provide a sufficient heat barrier to prevent visible evidence of conductor insulation deformation or adhesion between conductors, caused by adverse heat transfer during the inner jacketing operation.

(3) If required for manufacturing reasons, white or colored binders of nonhygroscopic and nonwicking material may be applied over the core wrap.

(4) Sufficient filling compound must be applied to the core wrap that voids or air spaces existing between the core and inner side of the core wrap are minimized.

(g) *Inner jacket.* (1) An inner jacket must be applied over the core and/or core wrap.

(2) The jacket must be free from holes, splits, blisters, or other imperfections and must be as smooth and concentric as is consistent with the best commercial practice.

(3) The inner jacket material and test requirements must be as specified for the outer jacket material per paragraphs (j)(3) through (j)(5)(iv) of this section.

(4) The inner jacket thickness at any point must not be less than 0.5 mm (0.020 in.). The thickness must be determined from measurements on 50 mm (2 in.) samples taken not less than 0.3 m (1 ft) from either end of the wire. The average must be determined from 4 readings taken approximately 90° apart

on any cross section of the samples. The maximum and minimum points must be determined by exploratory measurements. The maximum thickness minus the minimum thickness at any cross section must not exceed 43 percent of the average thickness at that cross section.

(h) *Flooding compound.* (1) Sufficient flooding compound must be applied on all sheath interfaces so that voids and air spaces in these areas are minimized.

(2) The flooding compound must be compatible with the jacket when tested in accordance with ASTM D 4568–86 at a temperature of 80° C. The floodant must exhibit adhesive properties sufficient to prevent jacket slip when tested in accordance with the requirements of appendix A, paragraph (III)(5), of this section.

(3) The individual wire manufacturer must satisfy RUS that the flooding compound selected for use is acceptable for the application.

(i) *Shield.* (1) A shield must be applied either longitudinally or helically over the inner jacket.

(i) If the shield is applied longitudinally, it must be corrugated.

(ii) If the shield is applied helically, it must be smooth.

(2) The overlap for longitudinally applied shields must be a minimum of 2 mm (0.075 in.) The overlap for helically applied shields must be a minimum of 23 percent of the tape width.

(3) General requirements for application of the shielding material are as follows:

(i) Successive lengths of shielding tapes may be joined during the manufacturing process by means of cold weld, electric weld, soldering with a nonacid flux, or other acceptable means;

(ii) Where two ends of a metal shield are to be joined together, care shall be taken to clean the metal surfaces in order to provide for a good mechanical and electrical connection;

(iii) The shields of each length of wire must be tested for continuity. A one meter (3 ft) section of shield containing a factory joint must exhibit not more than 110 percent of the resistance of a shield of equal length without a joint;

(iv) The breaking strength of any section of a shield tape containing a factory joint must not be less than 80 percent of the breaking strength of an adjacent section of the shield of equal length without a joint;

(v) The reduction in thickness of the shielding material due to the corrugating or application process must be kept to a minimum and must not exceed 10 percent at any spot; and

(vi) The shielding material must be applied in such a manner as to enable the wire to pass the bend test as specified in paragraph (n)(3) of this section.

(4) The following materials are acceptable for use as wire shielding:

Standard Wire	Gopher Resistant Wire
Copper Alloy 220 (Bronze). (0.1016 ± 0.0076 mm) .. (0.0040 ± 0.0003 in.)	Copper-Clad Stainless Steel 0.1270 ± 0.0127 mm (0.0050 ± 0.0005 in.)
Copper Alloy 220 (Bronze). 0.1270 ± 0.0127 mm .... (0.0050 ± 0.0005 in.)	Copper Alloy 664 0.1397 ± 0.0127 mm (0.0055 ± 0.0005 in.)
	Copper-Clad Alloy Steel 0.1270 ± 0.0127 mm (0.0050 ± 0.0005 in.)

(i) The copper-clad steels and copper alloy 664 shielding tapes must be capable of meeting the following performance requirements prior to application to the wire:

Property	Requirement
Tensile Strength Minimum, MPa (psi)	379 (55,000)
Tensile Yield Minimum, MPa (psi)	241 (35,000)
Elongation Minimum, percent in 50 mm (2 in.).	15

(ii) *Copper alloy 220.* The shielding material, prior to application to the wire, must be in the fully annealed condition and shall conform to the requirements of ASTM B 694–86 for C22000 commercial bronze.

(iii) *Copper-clad stainless steel.* In addition to meeting the requirements of paragraph (i)(4)(i) of this section, the shielding material, prior to application to the wire, must be in the fully annealed condition and must conform to the requirements of ASTM B 694–86, with a cladding ratio of 16/68/16 and

must have a minimum electrical conductivity of 28 percent IACS when measured in accordance with ASTM B 193–87.

(iv) *Copper alloy 664.* In addition to meeting the requirements of paragraph (i)(4)(i) of this section, the shielding material, prior to application to the wire, must be annealed temper and must conform to the requirements of ASTM B 694–86 and must have a minimum electrical conductivity of 28 percent IACS when measured in accordance with ASTM B 193–87.

(v) *Copper-clad alloy steel.* In addition to meeting the requirements of paragraph (i)(4)(i) of this section, the shielding material, prior to application to the wire, must be in the fully annealed condition and the copper component must conform to the requirements of ASTM B 224–91 and the alloy steel component must conform to the requirements of ASTM A 505–87, with a cladding ratio of 16/68/16, and must have a minimum electrical conductivity of 28 percent IACS when measured in accordance with ASTM B 193–87.

(j) *Outer jacket.* (1) The outer jacket must provide the wire with a tough, flexible, protective covering which can withstand exposure to sunlight, to atmospheric temperatures and stresses reasonably expected in normal installation and service.

(2) The jacket must be free from holes, splits, blisters, or other imperfections and must be as smooth and concentric as is consistent with the best commercial practice.

(3) The raw material used for the outer jacket must be one of the five types listed in paragraphs (j)(3)(i) through (j)(3)(v) of this section. The raw material must contain an antioxidant to provide long term stabilization and the materials must contain a 2.60 ± 0.25 percent concentration of furnace black to provide ultraviolet shielding. Both the antioxidant and furnace black must be compounded into the material by the raw material supplier.

(i) Low density, high molecular weight polyethylene (LDHMW) must conform to the requirements of ASTM D 1248–84(1989), Type I, Class C, Category 4 or 5, Grade J3.

(ii) Low density, high molecular weight ethylene copolymer (LDHMW) must conform to the requirements of ASTM D 1248–84 (1989), Type I, Class C, Category 4 or 5, Grade J3.

(iii) Linear low density, high molecular weight polyethylene (LLDHMW) must conform to the requirements of ASTM D 1248–84(1989), Type I, Class C, Category 4 or 5, Grade J3.

(iv) High density polyethylene (HD) must conform to the requirements of ASTM D 1248–84(1989), Type III, Class C, Category 4 or 5, Grade J4.

(v) Medium density polyethylene (MD) must conform to the requirements of ASTM D 1248–84(1989), Type II, Class C, Category 4 or 5, Grade J4.

(vi) Particle size of the carbon selected for use must not average greater than 20 nanometers.

(vii) Absorption coefficient must be a minimum of 400 in accordance with the procedures of ASTM D 3349–86.

(4) The outer jacketing material removed from or tested on the wire must be capable of meeting the following performance requirements:

Property	LLDHMW, Ethylene Copolymer	LDHMW Polyethylene	HD or MD Polyethylene
Melt Flow Rate Percent increase from raw material Maximum		50	50
<0.41 (Initial Melt Index)	100	—	—
0.41–2.00 (Initial Melt Index)	50	—	—
Tensile Strength Minimum, MPa (psi)	12.0 (1,700)	12.0 (1,700)	16.5 (2,400)
Ultimate Elongation Percent, Minimum	400	400	300
Shrinkback Percent of Length, Maximum	5	5	5
Impact Failures, Maximum	2/10	2/10	2/10

(5) *Testing procedures.* The procedures for testing the jacket samples for compliance with paragraph (j)(4) of this section must be as follows:

(i) *Melt flow rate.* The melt flow rate must be as determined by ASTM D 1238–90b, Condition E. Jacketing material must be free from flooding and filling compound.

(ii) *Tensile strength and ultimate elongation.* Test in accordance with ASTM D 4565–90a, using a jaw separation speed of 500 mm/min (20 in./min) for low density material and 50 mm/min (2 in./min) for high and medium density materials.

(iii) *Shrinkback.* Test in accordance with the procedures specified in ASTM D 4565–90a using a test temperature of 100 ± 1° C for low density material and a test temperature of 115 ± 1° C for high and medium density materials.

(iv) *Impact.* The test must be performed in accordance with ASTM D 4565–90a using an impact force of 4 newton-meter (3 pound force-foot) at a temperature of −20 ± 2° C. The cylinder must strike the sample at the shield overlap. A crack or split in the jacket constitutes failure.

(6) *Jacket thickness.* The minimum jacket thickness must be 0.64 mm (0.025 in.) except that the minimum thickness over the sheath slitting cord, if present, must be 0.46 mm (0.018 in.). The minimum point must be determined by exploratory measurements. The average thickness at any cross section must be determined from four readings including the minimum point, taken approximately 90° apart. The thickness measurement must exclude any jacket material that has formed into the corrugation. The maximum thickness at any cross section must not be greater than 155 percent of the minimum thickness.

(7) *Eccentricity.* The eccentricity of the jacket must not exceed 43 percent when calculated using the formula as follows:

$$\frac{\text{Maximum Thickness} - \text{Minimum Thickness}}{\text{Average Thickness}} \times 100 \text{ Percent}$$

(k) *Sheath slitting cord (optional).* (1) Sheath slitting cords may be used in the wire structure at the option of the manufacturer.

(2) When a sheath slitting cord is used it must be nonhygroscopic and nonwicking, continuous throughout a length of wire, and of sufficient strength to open the sheath without breaking the cord.

(3) Sheath slitting cords must be capable of consistently slitting the jacket(s) and/or shield for a continuous length of 0.6 m (2 ft) when tested in accordance with the procedure specified in appendix B of this section.

(l) *Identification marker and length marker.* (1) Each length of wire must be permanently identified as to manufacturer and year of manufacture.

(2) The number of conductor pairs and their gauge size must be marked on the jacket.

(3) The marking must be printed on the jacket at regular intervals of not more than 1.5 m (5 ft).

(4) An alternative method of marking may be used if accepted by RUS prior to its use.

(5) The completed wire must have sequentially numbered length markers in FEET OR METERS at regular intervals of not more than 1.5 m (5 ft) along the outside of the jacket.

(6) The method of length marking must be such that for any single length of wire, continuous sequential numbering must be employed.

(7) The numbers must be dimensioned and spaced to produce good legibility and must be approximately 3 mm (0.125 in.) in height. An occasional illegible marking is permissible if there is a legible marking located not more than 1.5 m (5 ft) from it.

(8) The method of marking must be by means of suitable surface markings producing a clear, distinguishable, contrasting marking acceptable to RUS. Where direct or transverse printing is employed, the characters should be indented to produce greater durability of marking. Any other method of length marking must be acceptable to RUS as producing a marker suitable for the field. Size, shape and spacing of numbers, durability, and overall legibility of the marker will be considered in acceptance of the method.

(9) The accuracy of the length marking must be such that the actual length of any wire section is never less than the length indicated by the marking and never more than one percent greater than the length indicated by the marking.

(10) The color of the initial marking must be white or silver. If the initial marking fails to meet the requirements of the preceding paragraphs, it will be permissible to either remove the defective marking and re-mark with the white or silver color or leave the defective marking on the wire and re-mark with yellow. No further re-marking is permitted. Any re-marking must be on a different portion of the wire circumference than any existing marking when possible and have a numbering sequence differing from any other existing marking by at least 5,000.

(11) Any reel of wire which contains more than one set of sequential markings must be labeled to indicate the color and sequence of marking to be used. The labeling must be applied to the reel and also to the wire.

(m) *Electrical requirements*—(1) *Mutual capacitance and conductance.* (i) The average mutual capacitance (corrected for length) of all pairs in any reel must not exceed 52 ± 4 nanofarad/ kilometer (nF/km) (83 ± 7 nanofarad/mile (nF/mile)) when tested in accordance with ASTM D 4566–90 at a frequency of 1.0 ± 0.1 kilohertz (kHz) and a temperature of 23 ± 3° C.

(ii) The mutual conductance (corrected for length and gauge) of any pair must not exceed 2 micromhos/kilometer (micromhos/km) (3.3 micromhos/mile) when tested in accordance with ASTM D 4566–90 at a frequency of 1.0 ± 0.1 kHz and a temperature of 23 ± 3° C.

(2) *Pair-to-pair capacitance unbalance.* The capacitance unbalance between any pair of the completed wire must not exceed 145 picofarad/kilometer (pF/km) (80 picofarad/1000 ft (pF/1000 ft)) when tested in accordance with ASTM D 4566–90 at a frequency of 1.0 ± 0.1 kHz and a temperature of 23 ± 3° C.

(3) *Pair-to-ground capacitance unbalance*—(i) *Pair-to-ground.* The capacitance unbalance as measured on the individual pairs of the completed wire must not exceed 2625 pF/km (800 pF/1000 ft) when tested in accordance with ASTM D 4566–90 at a frequency of 1.0 ± 0.1 kHz and a temperature of 23 ± 3° C.

(ii) When measuring pair-to-ground capacitance unbalance, all pairs, except the pair under test, are grounded to the shield.

(iii) Pair-to-ground capacitance unbalance may vary directly with the length of the wire.

(4) *Far-end crosstalk loss.* (i) The output-to-outputfar-end crosstalk loss (FEXT) between any pair combination of a completed wire when measured in accordance with ASTM D 4566–90 at a test frequency of 150 kHz must not be less than 58 decibel/ kilometer (dB/km) (63 decibel/1000 ft). If the loss K_o at a frequency F_o for length L_o is known, then K_x can be determined for any other frequency F_x or length L_x by:

$$\text{FEXT loss}\,(K_X) = K_O - 20\log 10\,\frac{F_X}{F_O} - 10\log 10\,\frac{L_X}{L_O}$$

(5) *Attenuation.* The attenuation of any individual pair on any reel of wire must not exceed the following limits when measured at or corrected to a temperature of 20 ± 1° C and a test frequency of 150 kHz. The test must be conducted in accordance with ASTM D 4566–90.

Conductor AWG	Individual Pair Attenuation dB/km (decibel/mile (dB/mile))	
	Maximum	Minimum
22	6.8 (11.0)	5.0 (8.1)
24	8.7 (14.0)	6.6 (10.7)

(6) *Insulation resistance.* Each insulated conductor in each length of completed wire, when measured with all other insulated conductors and the shield grounded, must have an insulation resistance of not less than 1600 megohm-kilometer (1000 megohm-mile) at 20 ± 1° C. The measurement must be made in accordance with the procedures of ASTM D 4566–90.

(7) *High voltage test.* (i) In each length of completed wire, the insulation between conductors when tested in accordance with ASTM D 4566–90 must withstand for 3 seconds a direct current (dc) potential whose value is not less than:

(A) 5.0 kilovolts for 22-gauge conductors; and

(B) 4.0 kilovolts for 24-gauge conductors.

(ii) In each length of completed wire, the dielectric strength between the shield and all conductors in the core must be tested in accordance with ASTM D 4566–90 and must withstand, for 3 seconds, a dc potential whose value is not less than 20 kilovolts.

(8) *Conductor resistance.* The dc resistance of any conductor must be measured in the completed wire in accordance with ASTM D 4566–90 and must not exceed the following values when measured at or corrected to a temperature of 20 ± 1° C.

AWG	Maximum Resistance	
	ohms/kilometer	(ohms/1000 ft)
22	57.1	(17.4)
24	90.2	(27.5)

(9) *Resistance unbalance.* (i) The difference in dc resistance between the two conductors of any pair in the completed wire must not exceed 5.0 percent when measured in accordance with the procedures of ASTM D 4566–90.

(ii) The resistance unbalance between tip and ring conductors shall be random with respect to the direction of unbalance. That is, the resistance of the tip conductors shall not be consistently higher with respect to the ring conductors and vice versa.

(n) *Mechanical requirements*—(1) *Defective wire.* Pairs in each length of wire will not be permitted to have either a ground, cross, short or open circuit condition.

(2) *Wire breaking strength.* The breaking strength of the completed wire must not be less than 890 newtons (200 pound-force) when tested in accordance with ASTM D 4565–90a using a jaw separation speed of 25 mm/min (1.0 in./min).

(3) *Wire bending test.* The completed wire must be capable of meeting the requirements of ASTM D 4565–90a after conditioning at −20 ± 2° C and at 23 ± 2° C.

(4) *Water penetration test.* (i) A one meter (3 ft) length of completed wire must be stabilized at 23 ± 2° C and tested in accordance with ASTM D 4565–90a using a one meter (3 ft) water head over the sample or placed under the equivalent continuous pressure for one hour.

(ii) After the one hour period, there must be no water leakage in the sheath interfaces, under the core wrap or between any insulated conductors in the core.

(iii) If water leakage is detected in the first sample, one 3 m (10 ft) additional adjacent sample from the same reel of wire must be tested in accordance with paragraph (n)(4)(ii) of this section. If the second sample exhibits water leakage, the entire reel of wire is to be rejected. If the second sample exhibits no leakage, the entire reel of wire is considered acceptable.

(5) *Compound flow test.* The completed wire must be capable of meeting the compound flow test specified in ASTM D 4565–90a when exposed for a period of 24 hours at a temperature of 80 ± 1° C. At the end of this test period, there must be no evidence of flowing or dripping of compound from either the core or sheath interfaces.

(o) *Acceptance testing and extent of testing.* (1) The tests described in appendix A of this section are intended for acceptance of wire designs and major modifications of accepted designs. RUS decides what constitutes a major modification. These tests are intended to show the inherent capability of the manufacturer to produce wire products having long life and stability.

(2) For initial acceptance, the manufacturer must submit:

(i) An original signature certification that the product fully complies with each requirement of this section;

(ii) Qualification Test Data, per appendix A of this section;

(iii) To periodic plant inspections;

(iv) A certification that the product does or does not comply with the domestic origin manufacturing provisions of the ''Buy American'' requirements of the Rural Electrification Act of 1938 (7 U.S.C. 901 *et seq.*);

(v) Written user testimonials concerning performance of the product; and

(vi) Other nonproprietary data deemed necessary by the Chief, Outside Plant Branch (Telephone).

(3) For requalification acceptance, the manufacturer must submit an original signature certification that the product fully complies with each section of the specification, excluding

the Qualification Section, and a certification that the product does or does not comply with the domestic origin manufacturing provisions of the ''Buy American'' requirements of the Rural Electrification Act of 1938 (7 U.S.C. 901 *et seq.*) for acceptance by June 30 every three years. The required data and certification must have been gathered within 90 days of the submission.

(4) Initial and requalification acceptance requests should be addressed to: Chairman, Technical Standards, Committee ''A'' (Telephone), Telecommunications Standards Division, Rural Utilities Service, Washington, DC 20250–1500.

(5) Tests on 100 percent of completed wire. (i) The shield of each length of wire must be tested for continuity using the procedures of ASTM D 4566–90.

(ii) Dielectric strength between all conductors and the shield must be tested to determine freedom from grounds in accordance with paragraph (m)(7)(ii) of this section.

(iii) Each conductor in the completed wire must be tested for continuity using the procedures of ASTM D 4566–90.

(iv) Dielectric strength between conductors must be tested to ensure freedom from shorts and crosses in accordance with paragraph (m)(7)(i) of this section.

(v) The average mutual capacitance must be measured on all wires.

(6) *Capability tests.* Tests on a quality assurance basis must be made as frequently as is required for each manufacturer to determine and maintain compliance with:

(i) Performance requirements for conductor insulation and jacket material;

(ii) Performance requirements for filling and flooding compounds;

(iii) Sequential marking and lettering;

(iv) Capacitance unbalance and crosstalk;

(v) Insulation resistance;

(vi) Conductor resistance and resistance unbalance;

(vii) Wire bending and wire breaking strength tests;

(viii) Mutual conductance and attenuation; and

(ix) Water penetration and compound flow tests.

(p) *Summary of records of electrical and physical tests.* (1) Each manufacturer must maintain suitable summary of records for a period of at least 3 years for all electrical and physical tests required on completed wire by this section as set forth in paragraphs (o)(5) and (o)(6) of this section. The test data for a particular reel shall be in a form that it may be readily available to the purchaser or to RUS upon request.

(2) Measurements and computed values must be rounded off to the number of places of figures specified for the requirement according to ASTM E 29–90.

(q) *Manufacturing irregularities.* (1) Repairs to the inner jacket and shield are not permitted in wire supplied to the end user under this section.

(2) Minor defects in the outer jackets (defects having a dimension of 3 mm (0.125 in.) or less in any direction) may be repaired by means of heat fusing in accordance with good commercial practices utilizing sheath grade compound.

(r) *Preparation for shipment.* (1) The wire must be shipped on reels. The diameter of the drum must be large enough to prevent damage to the wire from reeling or unreeling. The reels must be substantial and so constructed as to prevent damage to the wire during shipment and handling.

(2) The thermal wrap must comply with the requirements of appendix C of this section. When a thermal reel wrap is supplied, the wrap must be applied to the reel and must be suitably secured in place to minimize thermal exposure to the wire during storage and shipment. The use of the thermal reel wrap as a means of reel protection will be at the option of the manufacturer unless specified by the end user.

(3) The outer end of the wire must be securely fastened to the reel head so as to prevent the wire from becoming loose in transit. The inner end of the wire must be securely fastened in such a way as to make it readily available if required for electrical testing. Spikes, staples, or other fastening devices which penetrate the wire jacket must not be used. The method of fastening the wire ends must be accepted by RUS prior to it being used.

(4) Each length of wire must be wound on a separate reel unless otherwise specified or agreed to by the purchaser.

(5) Each reel must be plainly marked to indicate the direction in which it should be rolled to prevent loosening of the wire on the reel.

(6) Each reel must be stenciled or labeled on either one or both sides with the name of the manufacturer, year of manufacture, actual shipping length, an inner and outer end sequential length marking, description of the wire, reel number and the RUS wire designation:

Wire Designation
BFW
Wire Construction
Pair Count
Conductor Gauge
N = Copper Alloy 220 (Bronze) Shield
Y = Gopher Resistant Shields
Example: BFWY 3–24

Buried Filled Wire, Gopher Resistant Shield, 3 pair, 24 AWG

(7) Both ends of the filled buried wire, manufactured to the requirements of this section, must be equipped with end caps which are acceptable to RUS.

(The information and recordkeeping requirements of this section have been approved by the Office of Management and Budget (OMB) under the control number 0572–0059)

APPENDIX A TO 7 CFR 1755.860—QUALIFICATION TEST METHODS

(I) The test procedures described in this appendix are for qualification of initial designs and major modifications of accepted designs. Included in (V) of this appendix are suggested formats that may be used in submitting test results to RUS.

(II) *Sample Selection and Preparation.* (1) All testing must be performed on lengths removed sequentially from the same 3 pair, 22 gauge jacketed wire. This wire must not have been exposed to temperatures in excess of 38° C since its initial cool down after sheathing. The lengths specified are minimum lengths and if desirable from a laboratory testing standpoint longer lengths may be used.

(a) Length A shall be 10 ± 0.2 meters (33 ± 0.5 feet) long and must be maintained at 23 ± 3° C. One length is required.

(b) Length B shall be 12 ± 0.2 meters (40 ± 0.5 feet) long. Prepare the test sample by removing the inner and outer jacket, shield, and core wrap, if present, for a sufficient distance on both ends to allow the insulated conductors to be flared out. Remove sufficient conductor insulation so that appropriate electrical test connections can be made at both ends. Coil the specimen with a diameter of 15 to 20 times its sheath diameter. Three lengths are required.

(c) Length C shall be one meter (3 feet) long. Four lengths are required.

(d) Length D shall be 300 millimeters (1 foot) long. Four lengths are required.

(e) Length E shall be 600 millimeters (2 feet) long. Four lengths are required.

(f) Length F shall be 3 meters (10 feet) long and must be maintained at 23 ± 3° C for the duration of the test. Two lengths are required.

(2) *Data Reference Temperature.* Unless otherwise specified, all measurements shall be made at 23 ± 3° C.

(III) *Environmental Tests*—(1) *Heat Aging Test*—(a) *Test Samples.* Place one sample each of lengths B, C, D, and E in an oven or environmental chamber. The ends of sample B must exit from the chamber or oven for electrical tests. Securely seal the oven exit holes.

(b) *Sequence of Tests.* After conditioning the samples are to be subjected to the following tests:

(i) Water Immersion Test outlined in (III)(2) of this appendix;

(ii) Water Penetration Test outlined in (III)(3) of this appendix; .

(iii) Insulation Compression Test outlined in (III)(4) of this appendix; and

(iv) Jacket Slip Strength Test outlined in (III)(5) of this appendix.

(c) *Initial Measurements.* (i) For sample B, measure the open circuit capacitance and conductance for each pair at 1 and 150 kilohertz and the attenuation at 150 kilohertz after conditioning the sample at the data reference temperature for 24 hours. Calculate the average and standard deviation for the data of the 3 pairs on a per kilometer (per mile) basis.

(ii) The attenuation at 150 kilohertz may be calculated from open circuit admittance (Yoc) and short circuit impedance (Zsc) or may be obtained by direct measurement of attenuation.

(iii) Record on suggested formats attached in (V) of this appendix or on other easily readable formats.

(d) *Heat Conditioning.* (i) Immediately after completing the initial measurements, condition the sample for 14 days at a temperature of 65 ± 2° C.

(ii) At the end of this period note any exudation of filling compound. Measure and calculate the parameters given in (III)(1)(c) of this appendix. Record on suggested formats attached in (V) of this appendix or on other easily readable formats.

(iii) Cut away and discard a one meter (3 foot) section from each end of length B.

(e) *Overall Electrical Deviation.* (i) Calculate the percent change in all average parameters between the final parameters after conditioning with the initial parameters in (III)(1)(c) of this appendix.

(ii) The stability of the electrical parameters after completion of this test must be within the following prescribed limits:

(A) *Capacitance.* The average mutual capacitance must be within 5 percent of its original value;

(B) The change in average mutual capacitance must be less than 5 percent over the frequency range of 1 to 150 kilohertz;

(C) *Conductance.* The average mutual conductance must not exceed 2 micromhos/kilometer (3.3 micromhos/mile) at a frequency of 1 kilohertz; and

(D) *Attenuation.* The attenuation must not have increased by more than 5 percent over its original value.

(2) *Water Immersion Electrical Test*—(a) *Test Sample Selection.* The 10 meter (33 foot) section of length B must be tested.

(b) *Test Sample Preparation.* Prepare the sample by removing the inner and outer jacket, shield, and core wrap, if present, for a sufficient distance to allow one end to be accessed for test connections. Cut out a series of 2.5 millimeter by 13 millimeter (0.1 inch by 0.5 inch) rectangular slots along the test sample, at 300 millimeter (1 foot) intervals progressing successively 90 degrees around the circumference of the wire. Assure that the wire core is exposed at each slot by slitting the inner jacket and core wrap if present. Place the prepared sample in a dry vessel which when filled will maintain a one meter (3 foot) head of water over 6 meters (20 feet) of uncoiled wire. Extend and fasten the ends of the wire so they will be above the water line and the pairs are rigidly held for the duration of the test.

(c) *Capacitance and Conductance Testing.* Measure the initial values of mutual capacitance and conductance of all pairs in each wire at a frequency of 1 kilohertz before filling the vessel with water. Be sure the wire shield is grounded to the test equipment. Fill the vessel until there is a one meter (3 foot) head of water on the wires.

(i) Remeasure the mutual capacitance and conductance after the wires have been submerged for 24 hours and again after 30 days.

(ii) Record each sample separately on the suggested formats attached in (V) of this appendix or on other easily readable formats.

(d) *Overall Electrical Deviation.* (i) Calculate the percent change in all average parameters between the final parameters after conditioning with the initial parameters in (III)(2)(c) of this appendix.

(ii) The stability of the electrical parameters after of the test must be within the following prescribed limits:

(A) *Capacitance.* The average mutual capacitance must be within 5 percent of its original value; and

(B) *Conductance.* The average mutual conductance must not exceed 2 micromhos/kilometer (3.3 micromhos/mile) at a frequency of 1 kilohertz.

(3) *Water Penetration Testing.* (a) A watertight closure must be placed over the jacket of length C. The closure must not be placed over the jacket so tightly that the flow of water through preexisting voids or air spaces is restricted. The other end of the sample must remain open.

(b) Test per Option A or Option B. (i) *Option A.* Weigh the sample and closure prior to testing. Fill the closure with water and place under a continuous pressure of 10 ± 0.7 kilopascals (1.5 ± 0.1 pounds per square inch gauge) for one hour. Collect the water leakage from the end of the test sample during the test and weigh to the nearest 0.1 gram. Immediately after the one hour test, seal the ends of the wire with a thin layer of grease and remove all visible water from the closure, being careful not to remove water that penetrated into the core during the test. Reweigh the sample and determine the weight of water that penetrated into the core. The weight of water that penetrated into the core must not exceed 1 gram.

(ii) *Option B.* Fill the closure with a 0.2 gram sodium fluorscein per liter water solution and apply a continuous pressure of 10 ± 0.7 kilopascals (1.5 ± 0.1 pounds per square inch gauge) for one hour. Catch and weigh any water that leaks from the end of the wire during the one hour period. If no water leaks from the sample, carefully remove the water from the closure. Then carefully remove the outer jacket, shield, inner jacket and core wrap, if present, one at a time, examining with an ultraviolet light source for water penetration. After removal of the inner jacket and core wrap, if present, carefully dissect the core and examine for water penetration within the core. Where water penetration is observed, measure the penetration distance. The distance of water penetration into the core must not exceed 127 millimeters (5.0 inches).

(4) *Insulation Compression Test.* (a) *Test Sample D.* Remove inner and outer jacket, shield, and core wrap, if present, being careful not to damage the conductor insulation. Remove one pair from the core and carefully separate, wipe off core filler and straighten the insulated conductors. Retwist the two insulated conductors together under sufficient tension to form 10 evenly spaced 360 degree twists in a length of 100 millimeters (4 inches).

(b) *Sample Testing.* Center the mid 50 millimeters (2 inches) of the twisted pair between two smooth rigid parallel metal plates measuring 50 millimeters (2 inches) in length or

diameter. Apply a 1.5 volt direct current potential between the conductors, using a light or buzzer to indicate electrical contact between the conductors. Apply a constant load of 67 newtons (15 pound-force) on the sample for one minute and monitor for evidence of contact between the conductors. Record results on suggested formats attached in (V) of this appendix or on other easily readable formats.

(5) *Jacket Slip Strength Test*—(a) *Sample Selection.* Test sample E from (III)(1)(a) of this appendix.

(b) *Sample Preparation.* Prepare test sample in accordance with the procedures specified in ASTM D 4565–90a.

(c) *Sample Conditioning and Testing.* Remove the sample from the tensile tester prior to testing and condition for one hour at 50 ± 2° C. Test immediately in accordance with the procedure specified in ASTM D 4565–90a. A minimum outer jacket slip strength of 67 newtons (15 pound-force) is required. Record the load attained.

(6) *Humidity Exposure.* (a) Repeat steps (III)(1)(a) through (III)(1)(c)(iii) of this appendix for separate set of samples B, C, D and E which have not been subjected to prior environmental conditioning.

(b) Immediately after completing the measurements, expose the test sample to 100 temperature cyclings. Relative humidity within the chamber must be maintained at 90 ± 2 percent. One cycle consists of beginning at a stabilized chamber and test sample temperature of 52 ± 1° C, increasing the temperature to 57 ± 1° C, allowing the chamber and test samples to stabilize at this level, then dropping the temperature back to 52 ± 1° C.

(c) Repeat steps (III)(1)(d)(ii) through (III)(5)(c) of this appendix.

(7) *Temperature Cycling.* (a) Repeat steps (III)(1)(a) through (III)(1)(c)(iii) of this appendix for separate set of samples B, C, D and E which have not been subjected to prior environmental conditioning.

(b) Immediately after completing the measurements, subject the test sample to 10 cycles of temperature between −40° C and +60° C. The test sample must be held at each temperature extreme for a minimum of 1 1/2 hours during each cycle of temperature. The air within the temperature cycling chamber must be circulated throughout the duration of the cycling.

(c) Repeat steps (III)(1)(d)(ii) through (III)(5)(c) of this appendix.

(IV) *Control Sample*—(1) *Test Samples.* A separate set of lengths for samples A, C, D, and E must have been maintained at 23 ± 3° C for at least 48 hours before the testing.

(2) Repeat steps (III)(2) through (III)(5)(c) of this appendix except use length A instead of length B.

(3) *Surge Test.* (a) One length of sample F must be used to measure the breakdown between conductors while the other length of F must be used to measure core to shield breakdown.

(b) The samples must be capable of withstanding, without damage, a single surge voltage of 20 kilovolts peak between conductors, and 35 kilovolts peak between conductors and the shield as hereinafter described. The surge voltage must be developed from a capacitor discharge through a forming resistor connected in parallel with the dielectric of the test sample. The surge generator constants must be such as to produce a surge of 1.5 × 40 microseconds wave shape.

(c) The shape of the generated wave must be determined at a reduced voltage by connecting an oscilloscope across the forming resistor with the wire sample connected in parallel with the forming resistor. The capacitor bank is charged to the test voltage and then discharged through the forming resistor and test sample. The test sample will be considered to have passed the test if there is no distinct change in the wave shape obtained with the initial reduced voltage compared to that obtained after the application of the test voltage.

(V) The following suggested formats may be used in submitting the test results to RUS:

Environmental Conditioning _____

FREQUENCY 1 KILOHERTZ

PAIR NUMBER	CAPACITANCE		CONDUCTANCE	
	nF/km	(nF/mile)	micromhos/km	(micromhos/mile)
	Initial	Final	Initial	Final
1	_____	_____	_____	_____
2	_____	_____	_____	_____
3	_____	_____	_____	_____
Average $\bar{x}$	_____	_____	_____	_____

Overall Percent Difference in Average $\bar{x}$ Capacitance:_____ Conductance: _____

Environmental Conditioning _____

FREQUENCY 150 KILOHERTZ

PAIR NUMBER	CAPACITANCE		CONDUCTANCE		ATTENUATION	
	nF/km	(nF/mile)	micromhos/km	(micromhos/mile)	dB/km	(dB/mile)
	Initial	Final	Initial	Final	Initial	Final
1	_____	_____	_____	_____	_____	_____
2	_____	_____	_____	_____	_____	_____
3	_____	_____	_____	_____	_____	_____
Average $\bar{x}$	_____	_____	_____	_____	_____	_____

Overall Percent Difference in Average $\bar{x}$ Capacitance:_____ Conductance: _____ Attenuation:_____

Environmental Conditioning _____

WATER IMMERSION TEST (1 KILOHERTZ)

PAIR NUMBER	CAPACITANCE			CONDUCTANCE		
	nF/km	(nF/mile)		micromhos/km	(micromhos/mile)	
	Initial	24 hours	Final	Initial	24 hours	Final
1	_____	_____	_____	_____	_____	_____
2	_____	_____	_____	_____	_____	_____
3	_____	_____	_____	_____	_____	_____
Average $\bar{x}$	_____	_____	_____	_____	_____	_____

Overall Percent Difference in Average $\bar{x}$ Capacitance:_____ Conductance: _____

Water Penetration Test

	Option A		Option B	
	End Leakage grams	Weight Gain grams	End Leakage grams	Penetration mm (in.)
Control	_____	_____	_____	_____
Heat Age	_____	_____	_____	_____
Humidity Exposure	_____	_____	_____	_____
Temperature Cycling.	_____	_____	_____	_____

Insulation Compression

	Failures
Control	_____
Heat Age	_____
Humidity Exposure	_____
Temperature Cycling	_____

Jacket Slip Strength @ 50° C

	Load in newtons (pound-force)
Control	_____
Heat Age	_____
Humidity Exposure	_____

Jacket Slip Strength @ 50° C—Continued

	Load in newtons (pound-force)
Temperature Cycling	_____

Filler Exudation (grams)

Heat Age	_____
Humidity Exposure	_____
Temperature Cycle	_____

Surge Test (kilovolts)	
Conductor to Conductor	_____
Shield to Conductors	_____

APPENDIX B TO 7 CFR 1755.860—SHEATH SLITTING CORD QUALIFICATION

(I) The test procedures described in this appendix are for qualification of initial and subsequent changes in sheath slitting cords.

(II) *Sample Selection.* All testing must be performed on two 1.2 meters (4 feet) lengths of wire removed sequentially from the same 3 pair, 22 gauge jacketed wire. This wire must not have been exposed to temperatures in excess of 38° C since its initial cool down after sheathing.

(III) *Test Procedure.* (1) Using a suitable tool, expose enough of sheath slitting cord to permit grasping with needle nose pliers.

(2) The prepared test specimens must be maintained at a temperature of 23 ± 1° C for at least 4 hours immediately prior to and during the test.

(3) Wrap the sheath slitting cord around the plier jaws to ensure a good grip.

(4) Grasp and hold the wire in a convenient position while gently and firmly pulling the sheath slitting cord longitudinally in the direction away from the wire end. The angle of pull may vary to any convenient and functional degree. A small starting notch is permissible.

(5) The sheath slitting cord is considered acceptable if the cord can slit the jacket and/or shield for a continuous length of 0.6 meter (2 feet) without breaking the cord.

APPENDIX C TO 7 CFR 1755.860—THERMAL REEL WRAP QUALIFICATION

(I) The test procedures described in this appendix are for qualification of initial and subsequent changes in thermal reel wraps.

(II) *Sample Selection.* All testing must be performed on two 450 millimeter (18 inch) lengths of wire removed sequentially from the same 3 pair, 22 gauge jacketed wire. This wire must not have been exposed to temperatures in excess of 38° C since its initial cool down after sheathing.

(III) *Test Procedure.* (1) Place the two samples on an insulating material such as wood, etc.

(2) Tape thermocouples to the jackets of each sample to measure the jacket temperature.

(3) Cover one sample with the thermal reel wrap.

(4) Expose the samples to a radiant heat source capable of heating the uncovered jacket sample to a minimum of 71° C. A 600 watt photoflood lamp or an equivalent lamp having the light spectrum approximately that of the sun shall be used.

(5) The height of the lamp above the jacket shall be 380 millimeters (15 inches) or a height that produces the 71° C jacket temperature on the unwrapped sample.

(6) After the samples have stabilized at the temperature, the jacket temperatures of the samples must be recorded after one hour of exposure to the heat source.

(7) Compute the temperature difference between the jackets.

(8) For the thermal reel wrap to be acceptable to RUS, the temperature differences between the jacket with the thermal reel wrap and the jacket without the reel wrap must be greater than or equal to 17° C.

[58 FR 61004, Nov. 19, 1993, as amended at 60 FR 1711, Jan. 5, 1995]

§§ 1755.861—1755.869 [Reserved]

§ 1755.870 RUS specification for terminating cables.

(a) *Scope.* (1) This section establishes the requirements for terminating cables used to connect incoming outside plant cables to the vertical side of the main distributing frame in a telephone central office.

(i) The conductors are solid tinned copper, individually insulated with extruded solid dual insulating compounds.

(ii) The insulated conductors are twisted into pairs which are then stranded or oscillated to form a cylindrical core.

(iii) The cable structure is completed by the application of a core wrap, a shield, and a polyvinyl chloride jacket.

(2) The number of pairs and gauge size of conductors which are used within the RUS program are provided in the following table:

American Wire Gauge (AWG)	22	24
Number of Pairs	12	12
	50	50
	100	100
	200	200
	300	300
	400	400
	600	600
	800	800

NOTE: Cables larger in pair sizes from those shown in this table shall meet all the requirements of this section.

(3) All cables sold to RUS borrowers for projects involving RUS loan funds under this section must be accepted by RUS Technical Standards Committee ''A'' (Telephone). For cables manufactured to the specification of this section, all design changes to an accepted

design must be submitted for acceptance. RUS will be the sole authority on what constitutes a design change.

(4) Materials, manufacturing techniques, or cable designs not specifically addressed by this section may be allowed if accepted by RUS. Justification for acceptance of modified materials, manufacturing techniques, or cable designs shall be provided to substantiate product utility and long term stability and endurance.

(5) The American National Standard Institute/Electronic Industries Association (ANSI/EIA) 359–A–84, EIA Standard Colors for Color Identification and Coding, referenced in this section is incorporated by reference by RUS. This incorporation by reference was approved by the Director of the Federal Register in accordance with 5 U.S.C. 552(a) and 1 CFR part 51. Copies of ANSI/EIA 359–A–84 are available for inspection during normal business hours at RUS, room 2845, U.S. Department of Agriculture, Washington, DC 20250–1500 or at the Office of the Federal Register, 800 North Capitol Street, NW., suite 700, Washington, DC. Copies are available from Global Engineering Documents, 15 Inverness Way East, Englewood, CO 80112, telephone number (303) 792–2181.

(6) American Society for Testing and Materials Specifications (ASTM) B 33–91, Standard Specification for Tinned Soft or Annealed Copper Wire for Electrical Purposes; ASTM B 736–92a Standard Specification for Aluminum, Aluminum Alloy and Aluminum-Clad Steel Cable Shielding Stock; ASTM D 1248–84 (1989), Standard Specification for Polyethylene Plastics Molding and Extrusion Materials; ASTM D 1535–89, Standard Test Method for Specifying Color by the Munsell System; ASTM D 2287–81 (Reapproved 1988), Standard Specification for Nonrigid Vinyl Chloride Polymer and Copolymer Molding and Extrusion Compounds; ASTM D 2436–85, Standard Specification for Forced-Convection Laboratory Ovens for Electrical Insulation; ASTM D 2633–82 (Reapproved 1989), Standard Methods of Testing Thermoplastic Insulations and Jackets for Wire and Cable; ASTM D 4101–82 (1988), Standard Specification for Propylene Plastic Injection and Extrusion Materials; ASTM D 4565–90a, Standard Test Methods for Physical and Environmental Performance Properties of Insulations and Jackets for Telecommunications Wire and Cable; ASTM D 4566–90, Standard Test Methods for Electrical Performance Properties of Insulations and Jackets for Telecommunications Wire and Cable; and ASTM E 29–90, Standard Practice for Using Significant Digits in Test Data to Determine Conformance with Specifications, referenced in this section are incorporated by reference by RUS. These incorporations by references were approved by the Director of the Federal Register in accordance with 5 U.S.C. 552(a) and 1 CFR part 51. Copies of the ASTM standards are available for inspection during normal business hours at RUS, room 2845, U.S. Department of Agriculture, Washington, DC 20250–1500 or at the Office of the Federal Register, 800 North Capitol Street, NW., suite 700, Washington, DC. Copies are available from ASTM, 1916 Race Street, Philadelphia, Pennsylvania 19103–1187, telephone number (215) 299–5585.

(7) American National Standards Institute/National Fire Protection Association (ANSI/NFPA), NFPA 70–1993 National Electrical Code referenced in this section is incorporated by reference by RUS. This incorporation by reference was approved by the Director of the Federal Register in accordance with 5 U.S.C. 552(a) and 1 CFR part 51. A copy of the ANSI/NFPA standard is available for inspection during normal business hours at RUS, room 2845, U.S. Department of Agriculture, Washington, DC 20250–1500 or at the Office of the Federal Register, 800 North Capitol Street, NW., suite 700, Washington, DC. Copies are available from NFPA, Batterymarch Park, Quincy, Massachusetts 02269, telephone number 1 (800) 344–3555.

(8) Underwriters Laboratories Inc. (UL) 1666, Standard Test for Flame Propagation Height of Electrical and Optical-Fiber Cables Installed Vertically in Shafts, dated January 22, 1991, referenced in this section is incorporated by reference by RUS. This incorporation by reference was approved by the Director of the Federal Register in accordance with 5 U.S.C. 552(a) and 1 CFR part 51. A copy of the UL standard

is available for inspection during normal business hours at RUS, room 2845, U.S. Department of Agriculture, Washington, DC 20250–1500 or at the Office of the Federal Register, 800 North Capitol Street, NW., suite 700, Washington, DC. Copies are available from UL Inc., 333 Pfingsten Road, Northbrook, Illinois 60062–2096, telephone number (708) 272–8800.

(b) *Conductors and conductor insulation.* (1) Each conductor shall be a solid round wire of commercially pure annealed tin coated copper. Conductors shall meet the requirements of the American Society for Testing and Materials (ASTM) B 33–91 except that requirements for *Dimensions and Permissible Variations* are waived.

(2) Joints made in conductors during the manufacturing process may be brazed, using a silver alloy solder and nonacid flux, or they may be welded using either an electrical or cold welding technique. In joints made in uninsulated conductors, the two conductor ends shall be butted. Splices made in insulated conductors need not be butted but may be joined in a manner acceptable to RUS.

(3) The tensile strength of any section of a conductor, containing a factory joint, shall not be less than 85 percent of the tensile strength of an adjacent section of the solid conductor of equal length without a joint.

(4) Engineering Information: The sizes of wire used and their nominal diameters shall be as shown in the following table:

AWG	Nominal diameter	
	Millimeters	(Inches)
22	0.643	(0.0253)
24	0.511	(0.0201)

(5) Each conductor shall be insulated with a primary layer of natural or white solid, insulating grade, high density polyethylene or crystalline propylene/ethylene copolymer and an outer skin of colored, solid, insulating grade, polyvinyl chloride (PVC) using one of the insulating materials listed in paragraphs (b)(5)(i) through (iii) of this section.

(i) The polyethylene raw material selected to meet the requirements of this section shall be Type III, Class A, Category 4 or 5, Grade E9, in accordance with ASTM D 1248–84 (1989).

(ii) The crystalline propylene/ethylene raw material selected to meet the requirements of this section shall be Class PP 200B 40003 E11 in accordance with ASTM D 4101–82 (1988).

(iii) The PVC raw material selected to meet the requirements of this section shall be either Type PVC–64751E3XO, Type PVC–76751E3XO, or Type PVC–77751E3XO in accordance with ASTM D 2287–81 (1988).

(iv) Raw materials intended as conductor insulation furnished to these requirements shall be free from dirt, metallic particles, and other foreign matter.

(v) All insulating raw materials shall be accepted by RUS prior to their use.

(6) All conductors in any single length of cable shall be insulated with the same type of material.

(7) A permissible overall performance level of faults in conductor insulation when using the test procedures in paragraph (b)(8) of this section shall average not greater than one fault per 12,000 conductor meters (40,000 conductor feet) for each gauge of conductor.

(8) The test used to determine compliance with paragraph (b)(7) of this section shall be conducted as follows:

(i) Samples tested shall be taken from finished cables selected at random from standard production cable. The samples tested shall contain a minimum of 300 conductor meters (1,000 conductor feet) for cables sizes less than 50 pairs and 1,500 conductor meters (5,000 conductor feet) for cables sizes greater than or equal to 50 pairs. No further sample need be taken from the same cable production run within 6,000 cable meters (20,000 cable feet) of the original test sample from that run.

(ii) The cable sample shall have its jacket, shield, and core wrap removed and its core shall be immersed in tap water for a minimum period of 6 hours. In lieu of removing the jacket, shield, and core wrap from the core, the entire cable may be tested. In this case, the core shall be completely filled with tap water, under pressure; then the cable assembly shall be immersed for a minimum period of 6 hours. With the cable core still fully immersed, except for

end connections, the insulation resistance (IR) of all conductors to water shall be measured using a direct current (dc) voltage of 100 volts to 550 volts.

(iii) An IR value of less than 500 megohms for any individual insulated conductor tested at or corrected to a temperature of 23 °C is considered a failure. If the cable sample is more than 7.5 meters (25 feet) long, all failing conductors shall be retested and reported in 7.5 meter (25 foot) segments.

(iv) The pair count, gauge, footage, and number of insulation faults shall be recorded. This information shall be retained on a 6 month running basis for review by RUS when requested.

(v) A fault rate, in a continuous length in any one reel, in excess of one fault per 3,000 conductor meters (10,000 conductor feet) due to manufacturing defects is cause for rejection. A minimum of 6,000 conductor meters (20,000 conductor feet) is required to develop a noncompliance in a reel.

(9) Repairs to the conductor insulation during manufacturing are permissible. The method of repair shall be accepted by RUS prior to its use. The repaired insulation shall be capable of meeting the relevant electrical requirements of this section.

(10) All repaired sections of insulation shall be retested in the same manner as originally tested for compliance with paragraph (b)(7) of this section.

(11) The colored composite insulating material removed from or tested on the conductor, from a finished cable, shall be capable of meeting the following performance requirements:

Property	Composite insulation
Tensile Strength, Minimum Megapascals (MPa) (Pounds per square inch (psi))	16.5 (2400)
Ultimate Elongation Percent, Minimum	125
Cold Bend Failures, Maximum	0/10
Shrinkback, Maximum Millimeter (mm) (Inches (in.))	9.5 (3/8)
Adhesion, Maximum Newtons (N) (Pound-force (lbf))	13.3 (3)
Compression Minimum, N (lbf)	1780 (400)

(12) *Testing procedures.* The procedures for testing the composite insulation samples for compliance with paragraph (b)(11) of this section shall be as follows:

(i) *Tensile strength and ultimate elongation.* Samples of the insulation material, removed from the conductor, shall be tested in accordance with ASTM D 2633–82(1989), except that the speed of jaw separation shall be 50 millimeters/minute (50 mm/min) (2 inches/minute (2 in./min)).

NOTE: Quality assurance testing at a jaw separation speed of 500 mm/min (20 in./min) is permissible. Failures at this rate shall be retested at the 50 mm/min (2 in./min) rate to determine specification compliance.

(ii) *Cold bend.* Samples of the insulation material on the conductor shall be tested in accordance with ASTM D 4565–90a at a temperature of −40±1 °C with a mandrel diameter of 6 mm (0.25 in.). There shall be no cracks visible to normal or corrected-to-normal vision.

(iii) *Shrinkback.* Samples of insulation shall be tested for four hours at a temperature of 115±1 °C in accordance with ASTM D 4565–90a.

(iv) *Adhesion.* Samples of insulation material on the conductor shall be tested in accordance with ASTM D 4565–90a with a crosshead speed of 50 mm/min (2 in./min).

(v) *Compression.* Samples of the insulation material on the conductor shall be tested in accordance with ASTM D 4565–90a with a crosshead speed of 5 mm/min (0.2 in./min).

(13) Other methods of testing may be used if acceptable to RUS.

(c) *Identification of pairs and twisting of pairs.* (1) The PVC skin shall be colored to identify:

(i) The tip and ring conductor of each pair; and

(ii) Each pair in the completed cable.

(2) The colors used to provide identification of the tip and ring conductor of each pair shall be as shown in the following table:

Pair No.	Color	
	Tip	Ring
1	White	Blue
2	White	Orange
3	White	Green
4	White	Brown
5	White	Slate
6	Red	Blue
7	Red	Orange
8	Red	Green
9	Red	Brown
10	Red	Slate
11	Black	Blue
12	Black	Orange

Pair No.	Color	
	Tip	Ring
13	Black	Green
14	Black	Brown
15	Black	Slate
16	Yellow	Blue
17	Yellow	Orange
18	Yellow	Green
19	Yellow	Brown
20	Yellow	Slate
21	Violet	Blue
22	Violet	Orange
23	Violet	Green
24	Violet	Brown
25	Violet	Slate

(3) *Standards of color.* The colors of the insulated conductors supplied in accordance with this section are specified in terms of the Munsell Color System (ASTM D 1535–89) and shall comply with the ''Table of Wire and Cable Limit Chips'' as defined in ANSI/EIA–359–A–84. (Visual color standards meeting these requirements may be obtained directly from the Munsell Color Company, Inc., 2441 North Calvert Street, Baltimore, Maryland 21218).

(4) Positive identification of the tip and ring conductors of each pair by marking each conductor of a pair with the color of its mate is permissible. The method of marking shall be accepted by RUS prior to its use.

(5) Other methods of providing positive identification of the tip and ring conductors of each pair may be employed if accepted by RUS prior to its use.

(6) The insulated conductors shall be twisted into pairs.

(7) In order to provide sufficiently high crosstalk isolation, the pair twists shall be designed to enable the cable to meet the capacitance unbalance and the crosstalk loss requirements of paragraphs (h)(2), (h)(3), and (h)(4) of this section.

(8) The average length of pair twists in any pair in the finished cable, when measured on any 3 meter (m) (10 foot (ft)) length, shall not exceed 152 mm (6 in.).

(d) *Forming of the cable core.* (1) Twisted pairs shall be assembled in such a way as to form a substantially cylindrical group.

(2) When desired for lay-up reasons, the basic group may be divided into two or more subgroups called units.

(3) Each group, or unit in a particular group, shall be enclosed in bindings of the colors indicated for its particular pair count. The pair count, indicated by the color of insulation, shall be consecutive as indicated in paragraph (d)(5) of this section through units in a group.

(4) Threads or tapes used as binders shall be nonhygroscopic and nonwicking. The threads shall consists of a suitable number of ends of each color arranged as color bands. When tapes are used as binders, they shall be colored. Binders shall be applied with a lay of not more than 100 mm (4 in.). The colored binders shall be readily recognizable as the basic intended color and shall be distinguishable from all other colors.

(5) The colors of the bindings and their significance with respect to pair count shall be as shown in the following table:

Group No.	Color of bindings	Group pair count
1	White-Blue	1–25
2	White-Orange	26–50
3	White-Green	51–75
4	White-Brown	76–100
5	White-Slate	101–125
6	Red-Blue	126–150
7	Red-Orange	151–175
8	Red-Green	176–200
9	Red-Brown	201–225
10	Red-Slate	226–250
11	Black-Blue	251–275
12	Black-Orange	276–300
13	Black-Green	301–325
14	Black-Brown	326–350
15	Black-Slate	351–375
16	Yellow-Blue	376–400
17	Yellow-Orange	401–425
18	Yellow-Green	426–450
19	Yellow-Brown	451–475
20	Yellow-Slate	476–500
21	Violet-Blue	501–525
22	Violet-Orange	526–550
23	Violet-Green	551–575
24	Violet-Brown	576–600

(6) The use of the white unit binder in cables of 100 pair or less is optional.

(7) When desired for manufacturing reasons, two or more 25 pair groups may be bound together with nonhygroscopic and nonwicking threads or tapes into super-units. The group binders and the super-unit binders shall be colored such that the combination of the two binders shall positively identify each 25 pair group from every other 25 pair group in the cable.

(8) Super-unit binders shall be of the colors shown in the following table:

SUPER-UNIT BINDER COLORS

Pair No.	Binder color
1–600	White
601–1200	Red

(e) *Core wrap.* (1) The core shall be completely covered with a layer of nonhygroscopic and nonwicking dielectric material. The core wrap shall be applied with an overlap.

(2) The core wrap shall provide a sufficient heat barrier to prevent visible evidence of conductor insulation deformation or adhesion between conductors, caused by adverse heat transfer during the jacketing operation.

(3) Engineering Information: If required for manufacturing reasons, white or uncolored binders of nonhygroscopic and nonwicking material may be applied over the core and/or core wrap.

(f) *Shield.* (1) An aluminum shield, plastic coated on one side, shall be applied longitudinally over the core wrap.

(2) The shield may be applied over the core wrap with or without corrugations (smooth) and shall be bonded to the outer jacket.

(3) The shield overlap shall be a minimum of 3 mm (0.125 in.) for cables with core diameters of 15 mm (0.625 in.) or less and a minimum of 6 mm (0.25 in.) for cables with core diameters greater than 15 mm (0.625 in.). The core diameter is defined as the diameter under the core wrap and binding.

(4) General requirements for application of the shielding material shall be as follows:

(i) Successive lengths of shielding tapes may be joined during the manufacturing process by means of cold weld, electric weld, soldering with a nonacid flux, or other acceptable means;

(ii) The metal shield with the plastic coating shall have the coating removed prior to joining the metal ends together. After joining, the plastic coating shall be restored without voids using good manufacturing techniques;

(iii) The shields of each length of cable shall be tested for continuity. A one meter (3 ft) section of shield containing a factory joint shall exhibit not more than 110 percent of the resistance of a shield of equal length without a joint;

(iv) The breaking strength of any section of a shield tape containing a factory joint shall not be less than 80 percent of the breaking strength of an adjacent section of the shield of equal length without a joint;

(v) The reduction in thickness of the shielding material due to the corrugating or application process shall be kept to a minimum and shall not exceed 10 percent at any spot; and

(vi) The shielding material shall be applied in such a manner as to enable the cable to pass the bend test as specified in paragraph (i)(1) of this section.

(5) The dimensions of the uncoated aluminum tape shall be 0.2030±0.0254 mm (0.0080±0.0010 in.).

(6) The aluminum tape shall conform to either Alloy AA–1100–0, AA–1145–0, or AA–1235–0 as covered in the latest edition of Aluminum Standards and Data, issued by the Aluminum Association, except that requirements for tensile strength are waived.

(7) The single-sided plastic coated aluminum shield shall conform to the requirements of ASTM B 736–92a, Type I Coating, Class 1 or 2, or Type II Coating, Class 1. The minimum thickness of the Type I Coating shall be 0.038 mm (0.0015 in.). The minimum thickness of the Type II Coating shall be 0.008 mm (0.0003 in.).

(8) The plastic coated aluminum shield shall be tested for resistance to water migration by immersing a one meter (3 ft) length of tape under a one meter (3 ft) head of water containing a soluble dye plus 0.25 percent (%) wetting agent.

(i) After a minimum of 5 minutes, no dye shall appear between the interface of the shield tape and the plastic coating.

(ii) The actual test method shall be acceptable to RUS.

(9) The bond between the plastic coated shield and the jacket shall conform to the following requirements:

(i) Prepare test strips approximately 200 mm (8 in.) in length. Slit the jacket and shield longitudinally to produce 4 strips evenly spaced and centered in 4 quadrants on the jacket circumference. One of the strips shall be centered over

the overlapped edge of the shielding tape. The strips shall be 13 mm (0.5 in.) wide. For cable diameters less than 19 mm (0.75 in.) make two strips evenly spaced.

(ii) Separate the shield and jacket for a sufficient distance to allow the shield and jacket to be fitted in the upper and lower jaws of a tensile machine. Record the maximum force required to separate the shield and jacket to the nearest newton (pound-force). Repeat this action for each test strip.

(iii) The force required to separate the jacket from the shield shall not be less than 9 N (2 lbf) for any individual strip when tested in accordance with paragraph (f)(9)(ii) of this section. The average force for all strips of any cable shall not be less than 18 N (4 lbf).

(g) *Cable jacket and extraneous material.* (1) The jacket shall provide the cable with a tough, flexible, protective covering which can withstand stresses reasonably expected in normal installation and service.

(2) The jacket shall be free from holes, splits, blisters, or other imperfections and shall be as smooth and concentric as is consistent with the best commercial practice.

(3) The raw material used for the cable jacket shall be one of the following four types:

(i) Type PVC–55554EOXO in accordance with ASTM D 2287–81(1988);

(ii) Type PVC–65554EOXO in accordance with ASTM D 2287–81(1988);

(iii) Type PVC–55556EOXO in accordance with ASTM D 2287–81(1988); or

(iv) Type PVC–66554EOXO in accordance with ASTM D 2287–81(1988).

(4) The jacketing material removed from or tested on the cable shall be capable of meeting the following performance requirements:

Property	Jacket performance
Tensile Strength-Unaged Minimum, MPa (psi)	13.8 (2000)
Ultimate Elongation-Unaged Minimum, Percent (%)	200
Tensile Strength-Aged Minimum, % of original value	80
Ultimate Elongation-Aged Minimum, % of original value	50
Impact Failures, Maximum	2/10

(5) *Testing procedures.* The procedures for testing the jacket samples for compliance with paragraph (g)(4) of this section shall be as follows:

(i) *Tensile strength and ultimate elongation-unaged.* The test shall be performed in accordance with ASTM D 2633–82(1989), using a jaw separation speed of 50 mm/min (2 in./min).

NOTE: Quality assurance testing at a jaw separation speed of 500 mm/min (20 in./min) is permissible. Failures at this rate shall be retested at the 50 mm/min (2 in./min) rate to determine specification compliance.

(ii) *Tensile strength and ultimate elongation-aged.* The test shall be performed in accordance with paragraph (g)(5)(i) of this section after being aged for 7 days at a temperature of 100±1 °C in a circulating air oven conforming to ASTM D 2436–85.

(iii) *Impact.* The test shall be performed in accordance with ASTM D 4565–90a using an impact force of 4 newton-meter (3 pound force-foot) at a temperature of −10±1 °C. The cylinder shall strike the sample at the shield overlap. A crack or split in the jacket constitutes failure.

(6) *Jacket thickness.* The nominal jacket thickness shall be as specified in the following table. The test method used shall be either the End Sample Method (paragraph (g)(6)(i) of this section) or the Continuous Uniformity Thickness Gauge Method (paragraph (g)(6)(ii) of this section):

No. of pairs	Nominal jacket thickness mm (in.)
25 or less	1.4 (0.055)
50	1.5 (0.060)
100	1.7 (0.065)
200	1.9 (0.075)
300	2.2 (0.085)
400	2.4 (0.095)
600	2.9 (0.115)
800 and over	3.3 (0.130)

(i) *End sample method.* The jacket shall be capable of meeting the following requirements:

Minimum Average Thickness—90% of nominal thickness

Minimum Thickness—70% of nominal thickness

(ii) *Continuous uniformity thickness gauge method.* (A) The jacket shall be capable of meeting the following requirements:

Minimum Average Thickness—90% of nominal thickness

Minimum (Min.) Thickness—70 % of nominal thickness

Maximum (Max.) Eccentricity—55%

Eccentricity=Max. Thickness—Min. Thickness (Average Thickness)×100

(B) *Maximum and minimum thickness values.* The maximum and minimum thickness values shall be based on the average of each axial section.

(7) The color of the jacket shall be either black or dark grey in conformance with the Munsell Color System specified in ASTM D 1535–89.

(8) There shall be no water or other contaminants in the finished cable which would have a detrimental effect on its performance or its useful life.

(h) *Electrical requirements*—(1) *Mutual capacitance and conductance.* (i) The average mutual capacitance (corrected for length) of all pairs in any reel shall not exceed the following when tested in accordance with ASTM D 4566–90 at a frequency of 1.0± 0.1 kilohertz (kHz) and a temperature of 23±3°C:

Number of cable pairs	Mutual capacitance	
	Nanofarad/ kilometer	(Nanofarad/ mile)
12	52±4	(83±7)
Over 12	52±2	(83±4)

(ii) The root mean square (rms) deviation of the mutual capacitance of all pairs from the average mutual capacitance of that reel shall not exceed 3.0 % when calculated in accordance with ASTM D 4566–90.

(iii) The mutual conductance (corrected for length and gauge) of any pair shall not exceed 3.7 micromhos/kilometer (micromhos/km) (6.0 micromhos/mile) when tested in accordance with ASTM D 4566–90 at a frequency of 1.0±0.1 kHz and a temperature of 23±3°C.

(2) *Pair-to-pair capacitance unbalance.* The capacitance unbalance as measured on the completed cable shall not exceed 45.3 picofarad/kilometer (pF/km) (25 picofarad/1000 ft (pF/1000 ft)) rms when tested in accordance with ASTM D 4566–90 at a frequency of 1.0±0.1 kHz and a temperature of 23±3°C.

(3) *Pair-to-ground capacitance unbalance.* (i) The average capacitance unbalance as measured on the completed cable shall not exceed 574 pF/km (175 pF/1000 ft) when tested in accordance with ASTM D 4566–90 at a frequency of 1±0.1 kHz and a temperature of 23±3°C.

(ii) When measuring pair-to-ground capacitance unbalance all pairs except the pair under test are grounded to the shield except when measuring cable containing super-units in which case all other pairs in the same super-unit shall be grounded to the shield.

(iii) Pair-to-ground capacitance unbalance may vary directly with the length of the cable.

(4) *Crosstalk loss.* (i) The rms output-to-output far-end crosstalk loss (FEXT) measured on the completed cable in accordance with ASTM D 4566–90 at a test frequency of 150 kHz shall not be less than 68 decibel/kilometer (dB/km) (73 decibel/1000 ft (dB/1000 ft)). The rms calculation shall be based on the combined total of all adjacent and alternate pair combinations within the same layer and center to first layer pair combinations.

(ii) The FEXT crosstalk loss between any pair combination of a cable shall not be less than 58 dB/km (63 dB/1000 ft) at a frequency of 150 kHz. If the loss K_o at a frequency F_o for length L_o is known, then K_x can be determined for any other frequency F_x or length L_x by:

$$\text{FEXT loss}\,(K_x) = K_o - 20\log 10\,\frac{F_x}{F_o} - 10\log 10\,\frac{L_x}{L_o}$$

(iii) The near-end crosstalk loss (NEXT) as measured within and between units of a completed cable in accordance with ASTM D 4566–90 at a frequency of 772 kHz shall not be less than the following mean minus sigma (M–S) crosstalk requirement for any unit within the cable:

Unit size	M–S decibel (dB)
Within Unit:	
12 and 13 pairs	56
18 and 25 pairs	60
Between Unit:	
Adjacent 13 pairs	65
Adjacent 25 pairs	66
Nonadjacent (all)	81

Where M–S is the Mean near-end coupling loss based on the combined total of all pair combinations, less one Standard Deviation, Sigma, of the mean value.

(5) *Insulation resistance.* Each insulated conductor in each length of completed cable, when measured with all other insulated conductors and the shield grounded, shall have an insulation resistance of not less than 152 megohm-kilometer (500 megohm-mile) at 20±1°C. The measurement shall be made in accordance with the procedures of ASTM D 4566–90.

(6) *High voltage test.* (i) In each length of completed cable, the dielectric strength of the insulation between conductors shall be tested in accordance with ASTM D 4566–90 and shall withstand, for 3 seconds, a direct current (dc) potential whose value is not less than:

(A) 3.6 kilovolts for 22-gauge conductors; or

(B) 3.0 kilovolts for 24-gauge conductors.

(ii) In each length of completed cable, the dielectric strength between the shield and all conductors in the core shall be tested in accordance with ASTM D 4566–90 and shall withstand, for 3 seconds, a dc potential whose value is not less than 10 kilovolts.

(7) *Conductor resistance.* The dc resistance of any conductor shall be measured in the completed cable in accordance with ASTM D 4566–90 and shall not exceed the following values when measured at or corrected to a temperature of 20±1°C:

AWG	Maximum resistance	
	ohms/kilometer	(ohms/1000 ft)
22	60.7	(18.5)
24	95.1	(29.0)

(8) *Resistance unbalance.* (i) The difference in dc resistance between the two conductors of a pair in the completed cable shall not exceed the values listed in this paragraph when measured in accordance with the procedures of ASTM D 4566–90:

AWG	Resistance unbalance	Maximum for any reel
	Average percent	Individual pair percent
22	1.5	4.0
24	1.5	5.0

(ii) The resistance unbalance between tip and ring conductors shall be random with respect to the direction of unbalance. That is, the resistance of the tip conductors shall not be consistently higher with respect to the ring conductors and vice versa.

(9) *Electrical variations.* (i) Pairs in each length of cable having either a ground, cross, short, or open circuit condition shall not be permitted.

(ii) The maximum number of pairs in a cable which may vary as specified in paragraph (h)(9)(iii) of this section from the electrical parameters given in this section are listed in this paragraph. These pairs may be excluded from the arithmetic calculation:

Nominal pair count	Maximum No. of pairs with allowable electrical variation
12–100	1
101–300	2
301–400	3
401–600	4
601 and above	6

(iii) *Parameter variations*—(A) *Capacitance unbalance-to-ground.* If the cable fails either the maximum individual pair or average capacitance unbalance-to-ground requirement and all individual pairs are 3280 pF/km (1000 pF/1000 ft) or less the number of pairs specified in paragraph (h)(9)(ii) of this section may be eliminated from the average and maximum individual calculations.

(B) *Resistance unbalance.* Individual pair of not more than 7 percent for all gauges.

(C) *Far end crosstalk.* Individual pair combination of not less than 52 dB/km (57 dB/1000 ft).

NOTE: RUS recognizes that in large pair count cables (600 pair and above) a cross, short, or open circuit condition occasionally may develop in a pair which does not affect

the performance of the other cable pairs. In these circumstances rejection of the entire cable may be economically unsound or repairs may be impractical. In such circumstances the manufacturer may desire to negotiate with the customer for acceptance of the cable. No more than 0.5 percent of the pairs may be involved.

(i) *Mechanical requirements*—(1) *Cable cold bend test.* The completed cable shall be capable of meeting the requirements of ASTM D 4565–90a after conditioning at −20 ± 2 °C except the mandrel diameters shall be as specified below:

Cable outside diameter	Mandrel diameter
<40 mm (1.5 in.)	15x
≥40 mm (1.5 in.)	20x

(2) *Cable flame test.* The completed cable shall be capable of meeting a maximum flame height of 3.7 m (12.0 ft) when tested in accordance with Underwriters Laboratories (UL) 1666 dated January 22, 1991.

(3) *Cable listing.* All cables manufactured to the specification of this section at a minimum shall be listed as Communication Riser Cable (Type CMR) in accordance with Sections 800–50 and 800–51(b) of the 1993 National Electrical Code.

(j) *Sheath slitting cord* (optional). (1) Sheath slitting cords may be used in the cable structure at the option of the manufacturer.

(2) When a sheath slitting cord is used it shall be nonhygroscopic and nonwicking, continuous throughout a length of cable, and of sufficient strength to open the sheath without breaking the cord.

(3) Sheath slitting cords shall be capable of consistently slitting the jacket and/or shield for a continuous length of 0.6 m (2 ft) when tested in accordance with the procedure specified in appendix B of this section.

(k) *Identification marker and length marker.* (1) Each length of cable shall be permanently identified as to manufacturer and year of manufacture.

(2) The number of conductor pairs and their gauge size shall be marked on the jacket.

(3) The marking shall be printed on the jacket at regular intervals of not more than 1.5 m (5 ft).

(4) An alternative method of marking may be used if accepted by RUS prior to its use.

(5) The completed cable shall have sequentially numbered length markers in FEET OR METERS at regular intervals of not more than 1.5 m (5 ft) along the outside of the jacket.

(6) The method of length marking shall be such that for any single length of cable, continuous sequential numbering shall be employed.

(7) The numbers shall be dimensioned and spaced to produce good legibility and shall be approximately 3 mm (0.125 in.) in height. An occasional illegible marking is permissible if there is a legible marking located not more than 1.5 m (5 ft) from it.

(8) The method of marking shall be by means of suitable surface markings producing a clear, distinguishable, contrasting marking acceptable to RUS. Where direct or transverse printing is employed, the characters should be indented to produce greater durability of marking. Any other method of length marking shall be acceptable to RUS as producing a marker suitable for the field. Size, shape and spacing of numbers, durability, and overall legibility of the marker shall be considered in acceptance of the method.

(9) The accuracy of the length marking shall be such that the actual length of any cable section is never less than the length indicated by the marking and never more than one percent greater than the length indicated by the marking.

(10) The color of the initial marking for a black colored jacket shall be either white or silver. The color of the initial marking for a dark grey colored jacket shall be either red or black. If the initial marking of the black colored jacket fails to meet the requirements of the preceding paragraphs, it will be permissible to either remove the defective marking and re-mark with the white or silver color or leave the defective marking on the cable and re-mark with yellow. If the initial marking of the dark grey colored jacket fails to meet the requirements of the preceding paragraphs, it will be permissible to either remove the defective marking and re-mark with the red or black color or leave the defective

marking on the cable and re-mark with yellow. No further re-marking is permitted. Any re-marking shall be on a different portion of the cable circumference than any existing marking when possible and have a numbering sequence differing from any other existing marking by at least 5,000.

(11) Any reel of cable which contains more than one set of sequential markings shall be labeled to indicate the color and sequence of marking to be used. The labeling shall be applied to the reel and also to the cable.

(l) *Preconnectorized cable* (optional). (1) At the option of the manufacturer and upon request by the purchaser, cables 100 pairs and larger may be factory terminated in 25 pair splicing modules.

(2) The splicing modules shall meet the requirements of RUS Bulletin 345–54, PE–52, RUS Specification for Telephone Cable Splicing Connectors (Incorporated by Reference at § 1755.97), and be accepted by RUS prior to their use.

(m) *Acceptance testing and extent of testing.* (1) The tests described in appendix A of this section are intended for acceptance of cable designs and major modifications of accepted designs. RUS decides what constitutes a major modification. These tests are intended to show the inherent capability of the manufacturer to produce cable products having long life and stability.

(2) For initial acceptance, the manufacturer shall submit:

(i) An original signature certification that the product fully complies with each section of the specification;

(ii) Qualification Test Data, per appendix A of this section;

(iii) To periodic plant inspections;

(iv) A certification that the product does or does not comply with the domestic origin manufacturing provisions of the ''Buy American'' requirements of the Rural Electrification Act of 1938 (7 U.S.C. 901 *et seq.*);

(v) Written user testimonials concerning performance of the product; and

(vi) Other nonproprietary data deemed necessary by the Chief, Outside Plant Branch (Telephone).

(3) For requalification acceptance, the manufacturer shall submit an original signature certification that the product fully complies with each section of the specification, excluding the Qualification Section, and a certification that the product does or does not comply with the domestic origin manufacturing provisions of the ''Buy American'' requirements of the Rural Electrification Act of 1938 (7 U.S.C. 901 *et seq.*) for acceptance by June 30 every three years. The required data and certification shall have been gathered within 90 days of the submission.

(4) Initial and requalification acceptance requests should be addressed to: Chairman, Technical Standards Committee ''A'' (Telephone), Telecommunications Standards Division, Rural Utilities Service, Washington, DC 20250–1500.

(5) *Tests on 100 percent of completed cable.* (i) The shield of each length of cable shall be tested for continuity using the procedures of ASTM D 4566–90.

(ii) Dielectric strength between all conductors and the shield shall be tested to determine freedom from grounds in accordance with paragraph (h)(6)(ii) of this section.

(iii) Each conductor in the completed cable shall be tested for continuity using the procedures of ASTM D 4566–90.

(iv) Dielectric strength between conductors shall be tested to ensure freedom from shorts and crosses in accordance with paragraph (h)(6)(i) of this section.

(v) Each conductor in the completed preconnectorized cable shall be tested for continuity.

(vi) Each length of completed preconnectorized cable shall be tested for split pairs.

(vii) The average mutual capacitance shall be measured on all cables. If the average mutual capacitance for the first 100 pairs tested from randomly selected groups is between 50 and 53 nF/km (80 to 85 nF/mile), the remainder of the pairs need not to be tested on the 100 percent basis. (See paragraph (h)(1) of this section).

(6) *Capability tests.* Tests on a quality assurance basis shall be made as frequently as is required for each manufacturer to determine and maintain compliance with:

(i) Performance requirements for conductor insulation and jacket material;

(ii) Bonding properties of coated or laminated shielding materials;

(iii) Sequential marking and lettering;

(iv) Capacitance unbalance and crosstalk;

(v) Insulation resistance;

(vi) Conductor resistance and resistance unbalance;

(vii) Cable cold bend and cable flame tests; and

(viii) Mutual conductance.

(n) *Summary of records of electrical and physical tests.* (1) Each manufacturer shall maintain a suitable summary of records for a period of at least 3 years for all electrical and physical tests required on completed cable by this section as set forth in paragraphs (m)(5) and (m)(6) of this section. The test data for a particular reel shall be in a form that it may be readily available to the purchaser or to RUS upon request.

(2) Measurements and computed values shall be rounded off to the number of places of figures specified for the requirement according to ASTM E 29–90.

(o) *Manufacturing irregularities.* (1) Repairs to the shield are not permitted in cable supplied to the end user under this section.

(2) No repairs or defects in the jacket are allowed.

(p) *Preparation for shipment.* (1) The cable shall be shipped on reels unless otherwise specified or agreed to by the purchaser. The diameter of the drum shall be large enough to prevent damage to the cable from reeling or unreeling. The reels shall be substantial and so constructed as to prevent damage to the cable during shipment and handling.

(2) A waterproof corrugated board or other means of protection acceptable to RUS shall be applied to the reel and shall be suitably secured in place to prevent damage to the cable during storage and shipment.

(3) The outer end of the cable shall be securely fastened to the reel head so as to prevent the cable from becoming loose in transit. The inner end of the cable shall be securely fastened in such a way as to make it readily available if required for electrical testing. Spikes, staples, or other fastening devices which penetrate the cable jacket shall not be used. The method of fastening the cable ends shall be accepted by RUS prior to it being used.

(4) Each length of cable shall be wound on a separate reel unless otherwise specified or agreed to by the purchaser.

(5) The arbor hole shall admit a spindle 63 mm (2.5 in.) in diameter without binding. Steel arbor hole liners may be used but shall be acceptable to RUS prior to their use.

(6) Each reel shall be plainly marked to indicate the direction in which it should be rolled to prevent loosening of the cable on the reel.

(7) Each reel shall be stenciled or labeled on either one or both sides with the name of the manufacturer, year of manufacture, actual shipping length, an inner and outer end sequential length marking, description of the cable, reel number and the RUS cable designation:

Cable Designation

CT
Cable Construction
Pair Count
Conductor Gauge

A = Coated Aluminum Shield

P = Preconnectorized Cable

Example: CTAP 100–22

Terminating Cable, Coated Aluminum Shield, Preconnectorized, 100 pairs, 22 AWG.

(8) When preconnectorized cable is shipped, the splicing modules shall be protected to prevent damage during shipment and handling. The protection method shall be acceptable to RUS prior to its use.

(The information collection and recordkeeping requirements of this section have been approved by the Office of Management and Budget (OMB) under control number 0572–0059)

APPENDIX A TO 7 CFR 1755.870—QUALIFICATION TEST METHODS

(I) The test procedures described in this appendix are for qualification of initial designs and major modifications of accepted designs. Included in paragraph (V) of this appendix are suggested formats that may be used in submitting test results to RUS.

(II) *Sample Selection and Preparation.* (1) All testing shall be performed on lengths removed sequentially from the same 25 pair, 22

gauge jacketed cable. This cable shall not have been exposed to temperatures in excess of 38 °C since its initial cool down after sheathing. The lengths specified are minimum lengths and if desirable from a laboratory testing standpoint longer lengths may be used.

(a) Length A shall be 12 ± 0.2 meters (40 ± 0.5 feet) long. Prepare the test sample by removing the jacket, shield, and core wrap for a sufficient distance on both ends to allow the insulated conductors to be flared out. Remove sufficient conductor insulation so that appropriate electrical test connections can be made at both ends. Coil the sample with a diameter of 15 to 20 times its sheath diameter. Two lengths are required.

(b) Length B shall be 300 millimeters (1 foot) long. Three lengths are required.

(c) Length C shall be 3 meters (10 feet) long and shall be maintained at 23 ± 3 °C for the duration of the test. Two lengths are required.

(2) *Data Reference Temperature.* Unless otherwise specified, all measurements shall be made at 23 ± 3 °C.

(III) *Environmental Tests*—(1) *Heat Aging Test*—(a) *Test Samples.* Place one sample each of lengths A and B in an oven or environmental chamber. The ends of sample A shall exit from the chamber or oven for electrical tests. Securely seal the oven exit holes.

(b) *Sequence of Tests.* Sample B referenced in paragraph (III)(1)(a) of this appendix shall be subjected to the insulation compression test outlined in paragraph (III)(2) of this appendix.

(c) *Initial Measurements.* (i) For sample A, measure the open circuit capacitance and conductance for each odd pair at 1, 150, and 772 kilohertz after conditioning the sample at the data reference temperature for 24 hours. Calculate the average and standard deviation for the data of the 13 pairs on a per kilometer (per mile) basis.

(ii) Record on suggested formats in paragraph (V) of this appendix or on other easily readable formats.

(d) *Heat Conditioning.* (i) Immediately after completing the initial measurements, condition the sample for 14 days at a temperature of 65 ± 2 °C.

(ii) At the end of this period. Measure and calculate the parameters given in paragraph (III)(1)(c) of this appendix. Record on suggested formats in paragraph (V) of this appendix or on other easily readable formats.

(e) *Overall Electrical Deviation.* (i) Calculate the percent change in all average parameters between the final parameters after conditioning with the initial parameters in paragraph (III)(1)(c) of this appendix.

(ii) The stability of the electrical parameters after completion of this test shall be within the following prescribed limits:

(A) *Capacitance.* The average mutual capacitance shall be within 10 percent of its original value;

(B) The change in average mutual capacitance shall be less than 10 percent over the frequency range of 1 to 150 kilohertz; and

(C) *Conductance.* The average mutual conductance shall not exceed 3.7 micromhos/kilometer (6 micromhos/mile) at a frequency of 1 kilohertz.

(2) *Insulation Compression Test*—(a) *Test Sample B.* Remove jacket, shield, and core wrap being careful not to damage the conductor insulation. Remove one pair from the core and carefully separate and straighten the insulated conductors. Retwist the two insulated conductors together under sufficient tension to form 10 evenly spaced 360 degree twists in a length of 100 millimeters (4 inches).

(b) *Sample Testing.* Center the mid 50 millimeters (2 inches) of the twisted pair between two smooth rigid parallel metal plates measuring 50 millimeters (2 inches) in length or diameter. Apply a 1.5 volt direct current potential between the conductors, using a light or buzzer to indicate electrical contact between the conductors. Apply a constant load of 67 newtons (15 pound-force) on the sample for one minute and monitor for evidence of contact between the conductors. Record results on suggested formats in paragraph (V) of this appendix or on other easily readable formats.

(3) *Temperature Cycling.* (a) Repeat paragraphs (III)(1)(a) through (III)(1)(c)(ii) of this appendix for a separate set of samples A and B which have not been subjected to prior environmental conditioning.

(b) Immediately after completing the measurements, subject the test samples to 10 cycles of temperature between −40 °C and +60 °C. The test samples shall be held at each temperature extreme for a minimum of 1.5 hours during each cycle of temperature. The air within the temperature cycling chamber shall be circulated throughout the duration of the cycling.

(c) Repeat paragraphs (III)(1)(d)(ii) through (III)(2)(b) of this appendix.

(IV) *Control Sample*—(1) *Test Samples.* One length of sample B shall have been maintained at 23 ± 3 °C for at least 48 hours before the testing.

(2) Repeat paragraphs (III)(2) through (III)(2)(b) of this appendix.

(3) *Surge Test.* (a) One length of sample C shall be used to measure the breakdown between conductors while the other length of C shall be used to measure core to shield breakdown.

(b) The samples shall be capable of withstanding, without damage, a single surge voltage of 20 kilovolts peak between conductors, and 35 kilovolts peak between conductors and the shield as hereinafter described. The surge voltage shall be developed from a

capacitor discharge through a forming resistor connected in parallel with the dielectric of the test sample. The surge generator constants shall be such as to produce a surge of 1.5×40 microseconds wave shape.

(c) The shape of the generated wave shall be determined at a reduced voltage by connecting an oscilloscope across the forming resistor with the cable sample connected in parallel with the forming resistor. The capacitor bank is charged to the test voltage and then discharged through the forming resistor and test sample. The test sample shall be considered to have passed the test if there is no distinct change in the wave shape obtained with the initial reduced voltage compared to that obtained after the application of the test voltage.

(V) The following suggested formats may be used in submitting the test results to RUS:

Environmental Conditioning _____

FREQUENCY 1 KILOHERTZ

Pair No.	Capacitance nF/km (nF/mile)		Conductance micromhos/km (micromhos/mile)	
	Initial	Final	Initial	Final
1				
3				
5				
7				
9				
11				
13				
15				
17				
19				
21				
23				
25				
Average $\bar{x}$				
Overall Percent Difference in Average $\bar{x}$				

Environmental Conditioning _____

FREQUENCY 150 KILOHERTZ

Pair No.	Capacitance nF/km (nF/mile)		Conductance micromhos/km (micromhos/mile)	
	Initial	Final	Initial	Final
1				
3				
5				
7				
9				
11				
13				
15				
17				
19				
21				
23				
25				
Average $\bar{x}$				
Overall Percent Difference in Average $\bar{x}$				

Environmental Conditioning _____

FREQUENCY 772 KILOHERTZ

Pair No.	Capacitance nF/km (nF/mile)		Conductance micromhos/km (micromhos/mile)	
	Initial	Final	Initial	Final
1				

FREQUENCY 772 KILOHERTZ—Continued

Pair No.	Capacitance nF/km (nF/mile)		Conductance micromhos/km (micromhos/mile)	
	Initial	Final	Initial	Final
3				
5				
7				
9				
11				
13				
15				
17				
19				
21				
23				
25				
Average $\bar{x}$				
Overall Percent Difference in.				
Average $\bar{x}$				

	Failures
Insulation Compression:	
Control	
Heat Age	
Temperature Cycling	
Surge Test (kilovolts):	
Conductor-to-Conductor	
Shield-to-Conductors	

APPENDIX B TO 7 CFR 1755.870—SHEATH SLITTING CORD QUALIFICATION

(I) This test procedure described in this appendix is for qualification of initial and subsequent changes in sheath slitting cords.

(II) *Sample selection.* All testing shall be performed on two 1.2 m (4 ft) lengths of cable removed sequentially from the same 25 pair, 22 gauge jacketed cable. This cable shall not have been exposed to temperatures in excess of 38 °C since its initial cool down after sheathing.

(III) *Test procedure.* (1) Using a suitable tool, expose enough of the sheath slitting cord to permit grasping with needle nose pliers.

(2) The prepared test specimens shall be maintained at a temperature of 23 ± 1 °C for at least 4 hours immediately prior to and during the test.

(3) Wrap the sheath slitting cord around the plier jaws to ensure a good grip.

(4) Grasp and hold the cable in a convenient position while gently and firmly pulling the sheath slitting cord longitudinally in the direction away from the cable end. The angle of pull may vary to any convenient and functional degree. A small starting notch is permissible.

(5) The sheath slitting cord is considered acceptable if the cord can slit the jacket and/or shield for a continuous length of 0.6 m (2 ft) without breaking the cord.

[59 FR 30507, June 14, 1994; 59 FR 34899, July 7, 1994, as amended at 60 FR 1711, Jan. 5, 1995]

§§ 1755.871—1755.889 [Reserved]

§ 1755.890 RUS specification for filled telephone cables with expanded insulation.

(a) *Scope.* (1) This section covers the requirements for filled telephone cables intended for direct burial installation either by trenching or by direct plowing, for underground application by placement in a duct, or for aerial installation by attachment to a support strand.

(i) The conductors are solid copper, individually insulated with an extruded cellular insulating compound which may be either totally expanded or expanded with a solid skin coating.

(ii) The insulated conductors are twisted into pairs which are then stranded or oscillated to form a cylindrical core.

(iii) For high frequency applications, the cable core may be separated into compartments with screening shields.

(iv) A moisture resistant filling compound is applied to the stranded conductors completely covering the insulated conductors and filling the interstices between pairs and units.

(v) The cable structure is completed by the application of suitable core wrapping material, a flooding compound, a shield or a shield/armor, and an overall plastic jacket.

(2) The number of pairs and gauge size of conductors which are used within the RUS program are provided in the following table:

AWG	19	22	24	26
Pairs	6	6	6	
	12	12	12	
	18	18	18	
	25	25	25	25
		50	50	50
		75	75	75
		100	100	100
		150	150	150
		200	200	200
		300	300	300
		400	400	400
		600	600	600
		900	900	900
		1000	1000	1000
			1200	1200
			1500	1500
			1800	1800
				2100
				2400
				2700

NOTE: Cables larger in pair sizes than those shown in this table must meet all requirements of this section.

(3) Screened cable, when specified, must meet all requirements of this section. The pair sizes of screened cables used within the RUS program are referenced in paragraph (e)(2)(i) of this section.

(4) All cables sold to RUS borrowers for projects involving RUS loan funds under this section must be accepted by RUS Technical Standards Committee ''A'' (Telephone). For cables manufactured to the specification of this section, all design changes to an accepted design must be submitted for acceptance. RUS will be the sole authority on what constitutes a design change.

(5) Materials, manufacturing techniques, or cable designs not specifically addressed by this section may be allowed if accepted by RUS. Justification for acceptance of modified materials, manufacturing techniques, or cable designs must be provided to substantiate product utility and long-term stability and endurance.

(6) The American National Standard Institute/Insulated Cable Engineers Association, Inc. (ANSI/ICEA) S-84–608–1988, Standard For Telecommunications Cable, Filled, Polyolefin Insulated, Copper Conductor Technical Requirements referenced throughout this section is incorporated by reference by RUS. This incorporation by reference was approved by the Director of the Federal Register in accordance with 5 U.S.C. 552(a) and 1 CFR part 51. Copies of ANSI/ICEA S-84–608–1988 are available for inspection during normal business hours at RUS, room 2845, U.S. Department of Agriculture, Washington, DC 20250 or at the Office of the Federal Register, 800 North Capitol Street, NW., suite 700, Washington, DC. Copies are available from ICEA, P. O. Box 440, South Yarmouth, MA 02664, telephone number (508) 394–4424.

(7) American Society for Testing and Materials specifications (ASTM) A 505-87, Standard Specification for Steel, Sheet and Strip, Alloy, Hot-Rolled and Cold-Rolled, General Requirements For; ASTM B 193-87, Standard Test Method for Resistivity of Electrical Conductor Materials; ASTM B 224-80, Standard Classification of Coppers; ASTM B 694-86, Standard Specification for Copper, Copper Alloy, and Copper-Clad Stainless Steel Sheet and Strip for Electrical Cable Shielding; ASTM D 4565-90a, Standard Test Methods for Physical and Environmental Performance Properties of Insulations and Jackets for Telecommunications Wire and Cable; and ASTM D 4566-90, Standard Test Methods for Electrical Performance Properties of Insulations and Jackets for Telecommunications Wire and Cable referenced in this section are incorporated by reference by RUS. These incorporations by references were approved by the Director of the Federal Register in accordance with 5 U.S.C. 552(a) and 1 CFR part 51. Copies of the ASTM standards are available for inspection during normal business hours at RUS, room 2845, U.S. Department of Agriculture, Washington, DC 20250 or at the Office of the Federal Register, 800 North Capitol Street, NW., suite 700, Washington, DC. Copies area available from ASTM, 1916 Race Street, Philadelphia, PA 19103–1187, telephone number (215) 299–5585.

(b) *Conductors and conductor insulation.* (1) The gauge sizes of the copper conductors covered by this section must be 19, 22, 24, and 26 American Wire Gauge (AWG).

(2) Each conductor must comply with the requirements specified in ANSI/ICEA S-84–608–1988, paragraph 2.1.

(3) Factory joints made in conductors during the manufacturing process must comply with the requirements specified in ANSI/ICEA S-84–608–1988, paragraph 2.2.

(4) The raw materials used for conductor insulation must comply with the requirements specified in ANSI/ICEA S-84–608–1988, paragraphs 3.1 through 3.1.3.

(5) The finished conductor insulation must comply with the requirements specified in ANSI/ICEA S-84–608–1988, paragraphs 3.2.2, 3.2.3, and 3.3.

(6) Insulated conductor must not have an overall diameter greater than 2 millimeters (mm) (0.081 inch (in.)).

(7) A permissible overall performance level of faults in conductor insulation must average not greater than one fault per 12,000 conductor meters (40,000 conductor feet) for each gauge of conductor.

(i) All insulated conductors must be continuously tested for insulation faults during the twinning operation with a method of testing acceptable to RUS. The length count and number of faults must be recorded. The information must be retained for a period of 6 months and be available for review by RUS when requested.

(ii) The voltages for determining compliance with the requirements of this section are as follows:

AWG	Direct Current Voltages (kilovolts)
19	4.5
22	3.6
24	3.0
26	2.4

(8) Repairs to the conductor insulation during manufacture are permissible. The method of repair must be accepted by RUS prior to its use. The repaired insulation must be capable of meeting the relevant electrical requirements of this section.

(9) All repaired sections of insulation must be retested in the same manner as originally tested for compliance with paragraph (b)(7) of this section.

(10) The colored insulating material removed from or tested on the conductor, from a finished cable, must meet the performance requirements specified in ANSI/ICEA S-84–608–1988, paragraphs 3.4.1 through 3.4.6.

(c) *Identification of pairs and twisting of pairs.* (1) The insulation must be colored to identify:

(i) The tip and ring conductor of each pair; and

(ii) Each pair in the completed cable.

(2) The colors to be used in the pairs in the 25 pair group, together with the pair numbers must be in accordance with the table specified in ANSI/ICEA S-84–608–1988, paragraph 3.5.

(3) Positive identification of the tip and ring conductors of each pair by marking each conductor of a pair with the color of its mate is permissible. The method of marking must be accepted by RUS prior to its use.

(4) Other methods of providing positive identification of the tip and ring conductors of each pair may be employed if accepted by RUS prior to its use.

(5) The insulated conductors must be twisted into pairs.

(6) In order to provide sufficiently high crosstalk isolation, the pair twists must be designed to enable the cable to meet the capacitance unbalance and crosstalk loss requirements of paragraphs (k)(5), (k)(6), and (k)(8) this section.

(7) The average length of pair twists in any pair in the finished cable, when measured on any 3 meter (10 foot) length, must not exceed the requirement specified in ANSI/ICEA S-84–608–1988, paragraph 3.5.

(d) *Forming of the cable core.* (1) Twisted pairs must be assembled in such a way as to form a substantially cylindrical group.

(2) When desired for lay-up reasons, the basic group may be divided into two or more subgroups called units.

(3) Each group, or unit in a particular group, must be enclosed in bindings of the colors indicated for its particular pair count. The pair count, indicated by the colors of insulation, must be consecutive as indicated in paragraph (d)(6) of this section through units in a group.

(4) The filling compound must be applied to the cable core in such a way as to provide as near a completely filled core as is commercially practical.

(5) Threads and tapes used as binders must comply with the requirements specified in ANSI/ICEA S-84–608–1988, paragraphs 4.2 and 4.2.1.

(6) The colors of the bindings and their significance with respect to pair count must be as follows:

Group No.	Color of Bindings	Group Pair Count
1	White-Blue	1–25
2	White-Orange	26–50
3	White-Green	51–75
4	White-Brown	76–100
5	White-Slate	101–125
6	Red-Blue	126–150
7	Red-Orange	151–175
8	Red-Green	176–200
9	Red-Brown	201–225
10	Red-Slate	226–250
11	Black-Blue	251–275
12	Black-Orange	276–300
13	Black-Green	301–325
14	Black-Brown	326–350
15	Black-Slate	351–375
16	Yellow-Blue	376–400
17	Yellow-Orange	401–425
18	Yellow-Green	426–450
19	Yellow-Brown	451–475
20	Yellow-Slate	476–500
21	Violet-Blue	501–525
22	Violet-Orange	526–550
23	Violet-Green	551–575
24	Violet-Brown	576–600

(7) The use of the white unit binder in cables of 100 pairs or less is optional.

(8) When desired for manufacturing reasons, two or more 25 pair groups may be bound together with nonhygroscopic and nonwicking threads or tapes into a super-unit. Threads or tapes must meet the requirements specified in paragraph (d)(5) of this section. The group binders and the super-unit binders must be color coded such that the combination of the two binders must positively identify each 25 pair group from every other 25 pair group in the cable. Super-unit binders must be of the color shown in the following table:

Super-Unit Binder Colors

Pair Numbers	Binder Color
1–600	White
601–1200	Red
1201–1800	Black
1801–2400	Yellow
2401–3000	Violet
3001–3600	Blue
3601–4200	Orange
4201–4800	Green
4801–5400	Brown
5401–6000	Slate

(9) Color binders must not be missing for more than 90 meters (300 feet) from any 25 pair group or from any subgroup used as part of a super-unit. At any cable cross-section, no adjacent 25 pair groups and no more than one subgroup of any super-unit may have missing binders. In no case must the total number of missing binders exceed three. Missing super-unit binders must not be permitted for any distance.

(10) Any reel of cable which contains missing binders must be labeled indicating the colors and location of the binders involved. The labeling must be applied to the reel and also to the cable.

(e) *Screened cable.* (1) Screened cable must be constructed such that a metallic, internal screen(s) must be provided to separate and provide sufficient isolation between the compartments to meet the requirements of this section.

(2) At the option of the user or manufacturer, identified service pairs providing for voice order and fault location may be placed in screened cables.

(i) The number of service pairs provided must be one per twenty-five operating pairs plus two for a cable size up to and including 400 pairs, subject to a minimum of four service pairs.The pair counts for screened cables are as follows:

Screened Cable Pair Counts

Carrier Pair Count	Service Pairs	Total Pair Count
24	4	28
50	4	54
100	6	106
150	8	158
200	10	210
300	14	314
400	18	418

(ii) The service pairs must be equally divided among the compartments. The color sequence must be repeated in each compartment.

(iii) The electrical and physical characteristics of each service pair must meet all the requirements set forth in this section.

(iv) The colors used for the service pairs must be in accordance with the requirements of paragraph (b)(5) of this section. The color code used for the service pairs together with the service pair number are shown in the following table:

Color Code For Service Pairs

Service Pair No.	Color	
	Tip	Ring
1	White	Red
2	"	Black
3	"	Yellow
4	"	Violet
5	Red	Black
6	"	Yellow
7	"	Violet
8	Black	Yellow
9	"	Violet

(3) The screen tape must comply with the requirements specified in ANSI/ICEA S-84–608–1988, paragraphs 5.1 through 5.4.

(4) The screen tape must be tested for dielectric strength by completely removing the protective coating from one end to be used for grounding purposes.

(i) Using an electrode, over a 30 centimeter (1 foot) length, apply a direct current (dc) voltage at the rate of rise of 500 volts/second until failure.

(ii) No breakdown should occur below 8 kilovolts.

(f) *Filling compound.* (1) After or during the stranding operation and prior to application of the core wrap, filling compound must be applied to the cable core. The compound must be as nearly colorless as is commercially feasible and consistent with the end product requirements and pair identification.

(2) The filling compound must comply with the requirements specified in ANSI/ICEA S-84–608–1988, paragraphs 4.4 through 4.4.4.

(3) The individual cable manufacturer must satisfy RUS that the filling compound selected for use is suitable for its intended application. The filling compound must be applied to the cable in such a manner that the cable components will not be degraded.

(g) *Core wrap.* (1) The core wrap must comply with the requirements specified in ANSI/ICEA-S-84–608–1988, paragraph 4.3.

(2) If required for manufacturing reasons, white or colored binders of nonhygroscopic and nonwicking material may be applied over the core and/or wrap. When used, binders must meet the requirements specified in paragraph (d)(5) of this section.

(3) Sufficient filling compound must have been applied to the core wrap so that voids or air spaces existing between the core and the inner side of the core wrap are minimized.

(h) *Flooding compound.* (1) Sufficient flooding compound must be applied on all sheath interfaces so that voids and air spaces in these areas are minimized. When the optional armored design is used, the flooding compound must be applied between the core wrap and shield, between the shield and armor, and between the armor and the jacket so that voids and air spaces in these areas are minimized. The use of floodant over the outer metallic substrate is not required if uniform bonding, per paragraph (i)(7) of this section, is achieved between the plastic-clad metal and the jacket.

(2) The flooding compound must comply with the requirements specified in ANSI/ICEA S-84–608–1988, paragraph 4.5 and the jacket slip test requirements of appendix A, paragraph (III)(5) of this section.

(3) The individual cable manufacturer must satisfy RUS that the flooding compound selected for use is acceptable for the application.

(i) *Shield and optional armor.* (1) A single corrugated shield must be applied longitudinally over the core wrap.

(2) For unarmored cable the shield overlap must comply with the requirements specified in ANSI/ICEA S-84–608–1988, paragraph 6.3.2. Core diameter is defined as the diameter under the core wrap and binding.

(3) For cables containing the coated aluminum shield/coated steel armor (CACSP) sheath design, the coated aluminum shield must be applied in accordance with the requirements specified in ANSI/ICEA S-84–608–1988, paragraph 6.3.2, Dual Tape Shielding System.

(4) General requirements for application of the shielding material are as follows:

(i) Successive lengths of shielding tapes may be joined during the manufacturing process by means of cold weld, electric weld, soldering with a nonacid flux or other acceptable means.

(ii) Shield splices must comply with the requirements specified in ANSI/ICEA S-84–608–1988, paragraph 6.3.3.

(iii) The corrugations and the application process of the coated aluminum and copper bearing shields must comply with the requirements specified in ANSI/ICEA S-84–608–1988, paragraph 6.3.1.

(iv) The shielding material must be applied in such a manner as to enable the cable to pass the cold bend test specified in paragraph (l)(3) of this section.

(5) The following is a list of acceptable materials for use as cable shielding. Other types of shielding materials may also be used provided they are accepted by RUS prior to their use.

Standard Cable	Gopher Resistant Cable
8-mil Coated Aluminum[1] 5-mil Copper	10-mil Copper 6-mil Copper-Clad Stainless Steel 5 mil Copper-Clad Stainless Steel 5 mil Copper-Clad Alloy Steel 7-mil Alloy 194 6-mil Alloy 194 8-mil Coated Aluminum[1] and 6-mil Coated Steel[1]

[1]Dimensions of uncoated metal.

(i) The 8-mil aluminum tape must be plastic coated on both sides and must comply with the requirements of ANSI/ICEA S-84–608–1988, paragraph 6.2.2.

(ii) The 5-mil copper tape must comply with the requirements specified in ANSI/ICEA S-84–608–1988, paragraph 6.2.3.

(iii) The 10-mil copper tape must comply with the requirements specified in ANSI/ICEA S-84–608–1988, paragraph 6.2.4.

(iv) The 6-mil copper clad stainless steel tape must comply with the requirements specified in ANSI/ICEA S-84–608–1988, paragraph 6.2.5.

(v) The 5-mil copper clad stainless steel tape must be in the fully annealed condition and must conform to the requirements of American Society for Testing and Materials (ASTM) B 694–86, with a cladding ratio of 16/68/16.

(A) The electrical conductivity of the clad tape must be a minimum of 28 percent of the International Annealed Copper Standard (IACS) when measured per ASTM B 193–87.

(B) The tape must be nominally 0.13 millimeter (0.005 inch) thick with a minimum thickness of 0.11 millimeter (0.0045 inch).

(vi) The 5-mil copper clad alloy steel tape must be in the fully annealed condition and the copper component must conform to the requirements of ASTM B 224–80 and the alloy steel component must conform to the requirements of ASTM A 505–87, with a cladding ratio of 16/68/16.

(A) The electrical conductivity of the copper clad alloy steel tape must comply with the requirement specified in (5)(v)(A) of this section.

(B) The thickness of the copper clad alloy steel tape must comply with the requirements specified in (5)(v)(B) of this section.

(vii) The 6-mil and 7-mil 194 copper alloy tapes must comply with the requirements specified in ANSI/ICEA S-84–608–1988, paragraph 6.2.6.

(6) The corrugation extensibility of the coated aluminum shield must comply with the requirements specified in ANSI/ICEA S-84–608–1988, paragraph 6.4.

(7) When the jacket is bonded to the plastic coated aluminum shield, the bond between the jacket and shield must comply with the requirements specified in ANSI/ICEA S-84–608–1988, paragraph 7.2.6.

(8) A single plastic coated steel corrugated armor must be applied longitudinally directly over the coated aluminum shield listed in paragraph (i)(5) of this section with an overlap complying with the requirements specified in ANSI/ICEA S-84–608–1988, paragraph 6.3.2, Outer Steel Tape.

(9) Successive lengths of steel armoring tapes may be joined during the manufacturing process by means of cold weld, electric weld, soldering with a nonacid flux or other acceptable means. Armor splices must comply with the breaking strength and resistance requirements specified in ANSI/ICEA S-84–608–1988, paragraph 6.3.3.

(10) The corrugations and the application process of the coated steel armor must comply with the requirements specified in ANSI/ICEA S-84–608–1988, paragraph 6.3.1.

(i) The corrugations of the armor tape must coincide with the corrugations of the coated aluminum shield.

(ii) Overlapped portions of the armor tape must be in register (corrugations must coincide at overlap) and in contact at the outer edge.

(11) The armoring material must be so applied to enable the cable to pass the cold bend test specified in paragraph (l)(3) of this section.

(12) The 6-mil steel tape must be electrolytic chrome coated steel (ECCS) plastic coated on both sides and must comply with the requirements specified in ANSI/ICEA S-84–608–1988, paragraph 6.2.8.

(13) When the jacket is bonded to the plastic coated steel armor, the bond between the jacket and armor must comply with the requirement specified in ANSI/ICEA-S-84–608–1988, paragraph 7.2.6.

(j) *Cable jacket.* (1) The jacket must comply with the requirements specified in ANSI/ICEA S-84–608–1988, paragraph 7.2.

(2) The raw materials used for the cable jacket must comply with the requirements specified in ANSI/ICEA S-84–608–1988, paragraph 7.2.1.

(3) Jacketing material removed from or tested on the cable must meet the performance requirements specified in ANSI/ICEA S-84–608–1988, paragraphs 7.2.3 and 7.2.4.

(4) The thickness of the jacket must comply with the requirements specified in ANSI/ICEA S-84–608–1988, paragraph 7.2.2.

(k) *Electrical requirements*—(1) *Conductor resistance.* The direct current resistance of any conductor in a completed cable and the average resistance of all conductors in a Quality Control Lot must comply with the requirements specified in ANSI/ICEA S-84–608–1988, paragraph 8.1.

(2) *Resistance unbalance.* (i) The direct current resistance unbalance between the two conductors of any pair in a completed cable and the average resistance unbalance of all pairs in a completed cable must comply with the requirements specified in ANSI/ICEA S-84–608–1988, paragraph 8.2.

(ii) The resistance unbalance between tip and ring conductors shall be random with respect to the direction of unbalance. That is, the resistance of the tip conductors shall not be consistently higher with respect to the ring conductors and vice versa.

(3) *Mutual capacitance.* The average mutual capacitance of all pairs in a completed cable and the individual mutual capacitance of any pair in a completed cable must comply with the requirements specified in ANSI/ICEA S-84–608–1988, paragraph 8.3.

(4) *Capacitance difference.* (i) The capacitance difference for completed cables having 75 pairs or greater must comply with the requirement specified in ANSI/ICEA S-84–608–1988, paragraph 8.4.

(ii) When measuring screened cable, the inner and outer pairs must be selected from both sides of the screen.

(5) *Pair-to-pair capacitance unbalance*—(i) *Pair-to-pair.* The capacitance unbalance as measured on the completed cable must comply with the requirements specified in ANSI/ICEA S-84–608–1988, paragraph 8.5.

(ii) *Screened cable.* In cables with 25 pairs or less and within each group of multigroup cables, the pair-to-pair capacitance unbalance between any two pairs in an individual compartment must comply with the requirements specified in ANSI/ICEA S-84–608–1988, paragraph 8.5. The pair-to-pair capacitance unbalances to be considered must be:

(A) Between pairs adjacent in a layer in an individual compartment;

(B) Between pairs in centers of 4 pairs or less in an individual compartment; and

(C) Between pairs in adjacent layers in an individual compartment when the number of pairs in the inner (smaller) layer is 6 or less. The center is counted as a layer.

(iii) In cables with 25 pairs or less, the root-mean-square (rms) value is to include all the pair-to-pair unbalances measured for each compartment separately.

(iv) In cables containing more than 25 pairs, the rms value must include the pair-to-pair unbalances in the separate compartments.

(6) *Pair-to-ground capacitance unbalance*—(i) *Pair-to-ground.* The capacitance unbalance as measured on the completed cable must comply with the requirements specified in ANSI/ICEA S-84–608–1988, paragraph 8.6.

(ii) When measuring pair-to-ground capacitance unbalance all pairs except the pair under test are grounded to the shield and/or shield/armor except when measuring cables containing super

units in which case all other pairs in the same super unit must be grounded to the shield.

(iii) The screen tape must be left floating during the test.

(iv) Pair-to-ground capacitance unbalance may vary directly with the length of the cable.

(7) *Attenuation.* (i) For nonscreened and screened cables, the average attenuation of all pairs on any reel when measured at 150 and 772 kilohertz must comply with the requirements specified in ANSI/ICEA S-84–608–1988, paragraph 8.7, Foam and/or Foam-Skin Column.

(ii) For T1C type cables over 12 pairs, the maximum average attenuation of all pairs on any reel must not exceed the values listed below when measured at a frequency of 1576 kilohertz at or corrected to a temperature of 20 ± 1° C. The test must be conducted in accordance with ASTM D 4566–90.

AWG	Maximum Average Attenuation decibel/kilometer (dB/km) (decibel/mile)
19	14.9 (24.0)
22	21.6 (34.8)
24	27.2 (43.8)

(8) *Crosstalk loss.* (i) The equal level far-end power sum crosstalk loss (FEXT) as measured on the completed cable must comply with the requirements specified in ANSI/ICEA S-84–608–1988, paragraph 8.8, FEXT Table.

(ii) The near-end power sum crosstalk loss (NEXT) as measured on completed cable must comply with the requirements specified in ANSI/ICEA S-84–608–1988, paragraph 8.8, NEXT Table.

(iii) *Screened cable.* (A) For screened cables the NEXT as measured on the completed cable must comply with the requirements specified in ANSI/ICEA S-84–608–1988, paragraphs 8.9 and 8.9.1.

(B) For T1C screened cable the NEXT as measured on the completed cable must comply with the requirements specified in ANSI/ICEA S-84–608–1988, paragraphs 8.9 and 8.9.2.

(9) *Insulation resistance.* The insulation resistance of each insulated conductor in a completed cable must comply with the requirement specified in ANSI/ICEA S-84–608–1988, paragraph 8.11.

(10) *High voltage test.* (i) In each length of completed cable, the insulation between conductors must comply with the requirements specified in ANSI/ICEA S-84–608–1988, paragraph 8.12, Foam and/or Foam-Skin Column.

(ii) In each length of completed cable, the dielectric between the shield and/or armor and conductors in the core must comply with the requirements specified in ANSI/ICEA S-84–608–1988, paragraph 8.13, Single Jacketed, Foam and/or Foam-Skin Column. In screened cable the screen tape must be left floating.

(iii) *Screened cable.* (A) In each length of completed screened cable, the dielectric between the screen tape and the conductors in the core must comply with the requirement specified in ANSI/ICEA S-84–608–1988, paragraph 8.14.

(B) In this test, the cable shield and/or armor must be left floating.

(11) *Electrical variations.* (i) Pairs in each length of cable having either a ground, cross, short, or open circuit condition will not be permitted.

(ii) The maximum number of pairs in a cable which may vary as specified in paragraph (k)(11)(iii) of this section from the electrical parameters given in this section are listed below. These pairs may be excluded from the arithmetic calculation.

Nominal Pair Count	Maximum Number of Pairs With Allowable Electrical Variation
6–100	1
101–300	2
301–400	3
401–600	4
601 and above	6

(iii) *Parameter variations.* (A) *Capacitance unbalance-to-ground.* If the cable fails either the maximum individual pair or average capacitance unbalance-to-ground requirement and all individual pairs are 3937 picofarad/kilometer (1200 picofarad/1000 feet) or less, the number of pairs specified in paragraph (k)(11)(ii) of this section may be eliminated from the average and maximum individual calculations.

(B) *Resistance unbalance.* Individual pair of 7 percent for all gauges.

(C) *Conductor resistance, maximum.* The following table shows maximum conductor resistance:

AWG	ohms/ kilo- meter	(ohms/ 1000 feet)
19	29.9	(9.1)
22	60.0	(18.3)
24	94.5	(28.8)
26	151.6	(46.2)

NOTE: RUS recognizes that in large pair count cable (600 pair and above) a cross, short, or open circuit condition occasionally may develop in a pair which does not affect the performance of the other cable pairs. In these circumstances rejection of the entire cable may be economically unsound or repairs may be impractical. In such circumstances the manufacturer may desire to negotiate with the customer for acceptance of the cable. No more than 0.5 percent of the pairs may be involved.

(l) *Mechanical requirements*—(1) *Compound flow test.* All cables manufactured in accordance with the requirements of this section must be capable of meeting the compound flow test specified in ANSI/ICEA S-84–608–1988, paragraph 9.1 using a test temperature of 80 ± 1° C.

(2) *Water penetration test.* All cables manufactured in accordance with the requirements of this section must be capable of meeting the water penetration test specified in ANSI/ICEA S-84–608–1988, paragraph 9.2.

(3) *Cable cold bend test.* All cables manufactured in accordance with the requirements of this section must be capable of meeting the cable cold bend test specified in ANSI/ICEA S-84–608–1988, paragraph 9.3.

(4) *Cable impact test.* All cables manufactured in accordance with the requirements of this section must be capable of meeting the cable impact test specified in ANSI/ICEA S-84–608–1988, paragraph 9.4.

(5) *Jacket notch test (CACSP sheath only).* All cables utilizing the coated aluminum/coated steel sheath (CACSP) design manufactured in accordance with the requirements of this section must be capable of meeting the jacket notch test specified in ANSI/ICEA S-84–608–1988, paragraph 9.5.

(6) *Cable torsion test (CACSP sheath only).* All cables utilizing the coated aluminum/coated steel sheath (CACSP) design manufactured in accordance with the requirements of this section must be capable of meeting the cable torsion test specified in ANSI/ICEA S-84–608–1988, paragraph 9.6.

(m) *Sheath slitting cord (optional).* (1) Sheath slitting cord may be used in the cable structure at the option of the manufacturer unless specified by the end user.

(2) When a sheath slitting cord is used it must be nonhygroscopic and nonwicking, continuous throughout a length of cable and of sufficient strength to open the sheath without breaking the cord.

(n) *Identification marker and length marker.* (1) Each length of cable must be identified in accordance with ANSI/ICEA S-84–608–1988, paragraphs 10.1 through 10.1.4. The color of the ink used for the initial outer jacket marking must be either white or silver.

(2) The markings must be printed on the jacket at regular intervals of not more than 0.6 meter (2 feet).

(3) The completed cable must have sequentially numbered length markers in accordance with ANSI/ICEA S-84–608–1988, paragraph 10.1.5. The color of the ink used for the initial outer jacket marking must be either white or silver.

(o) *Preconnectorized cable (optional).* (1) At the option of the manufacturer and upon request by the purchaser, cables 100 pairs and larger may be factory terminated in 25 pair splicing modules.

(2) The splicing modules must meet the requirements of RUS Bulletin 345–54, PE-52, RUS Specification for Telephone Cable Splicing Connectors (Incorporated by Reference at § 1755.97), and be accepted by RUS prior to their use.

(p) *Acceptance testing and extent of testing.* (1) The tests described in appendix A of this section are intended for acceptance of cable designs and major modifications of accepted designs. What constitutes a major modification is at the discretion of RUS. These tests are intended to show the inherent capability of the manufacturer to produce cable products having long life and stability.

(2) For initial acceptance, the manufacturer must submit:

(i) An original signature certification that the product fully complies with each section of the specification;

(ii) Qualification Test Data, per appendix A of this section;

(iii) To periodic plant inspections;

(iv) A certification that the product does or does not comply with the domestic origin manufacturing provisions of the ''Buy American'' requirements of the Rural Electrification Act of 1938 (7 U.S.C. 901 *et seq.*);

(v) Written user testimonials concerning field performance of the product; and

(vi) Other nonproprietary data deemed necessary by the Chief, Outside Plant Branch (Telephone).

(3) For requalification acceptance, the manufacturer must submit an original signature certification that the product fully complies with each section of the specification, excluding the Qualification Section, and a certification that the product does or does not comply with the domestic origin manufacturing provisions of the ''Buy American'' requirements of the Rural Electrification Act of 1938 (7 U.S.C. 901 *et seq.*), for acceptance by August 30 of each year. The required data must have been gathered within 90 days of the submission. If the initial acceptance of a product to this specification was within 180 days of August 30, then requalification for that product will not be required for that year.

(4) Initial and requalification acceptance requests should be addressed to:

Chairman, Technical Standards Committee ''A'' (Telephone), Telecommunications Standard Division, Rural Utilities Service, Washington, DC 20250–1500.

(5) *Tests on 100 percent of completed cable.* (i) The shield and/or armor of each length of cable must be tested for continuity in accordance with ANSI/ICEA S-84–608–1988, paragraph 8.16.

(ii) The screen tape of each length of screened cable must be tested for continuity in accordance with ANSI/ICEA S-84–608–1988, paragraph 8.16.

(iii) Dielectric strength between conductors and shield and/or armor must be tested to determine freedom from grounds in accordance with paragraph (k)(10)(ii) of this section.

(iv) Dielectric strength between conductors and screen tape must be tested to determine freedom from grounds in accordance with paragraph (k)(10)(iii) of this section.

(v) Each conductor in the completed cable must be tested for continuity in accordance with ANSI/ICEA S-84–608–1988, paragraph 8.16.

(vi) Dielectric strength between conductors, in each length of completed cable, must be tested to insure freedom from shorts and crosses in each length of completed cable in accordance with paragraph (k)(10)(i) of this section.

(vii) Each conductor in the completed preconnectorized cable must be tested for continuity.

(viii) Each length of completed preconnectorized cable must be tested for split pairs.

(ix) The average mutual capacitance must be measured on all cables. If the average mutual capacitance for the first 100 pairs tested from randomly selected groups is between 50 and 53 nanofarads/kilometer (nF/km) (80 and 85 nanofarad/mile), the remainder of the pairs need not be tested on the 100 percent basis (See paragraph (k)(3) of this section).

(6) *Capability tests.* Tests on a quality assurance basis must be made as frequently as is required for each manufacturer to determine and maintain compliance with:

(i) Performance requirements for conductor insulation, jacketing material, and filling and flooding compounds;

(ii) Bonding properties of coated or laminated shielding and armoring materials and performance requirements for screen tape;

(iii) Sequential marking and lettering;

(iv) Capacitance difference, capacitance unbalance, crosstalk, and attenuation;

(v) Insulation resistance, conductor resistance, and resistance unbalance;

(vi) Cable cold bend and cable impact tests;

(vii) Water penetration and compound flow tests; and

(viii) Jacket notch and cable torsion tests.

(q) *Summary of records of electrical and physical tests.* (1) Each manufacturer must maintain suitable summary records for a period of at least 3 years of all electrical and physical tests required on completed cable by this section as set forth in paragraphs (p)(5) and (p)(6) of this section. The test data for a particular reel must be in a form

that it may be readily available to the purchaser or to RUS upon request.

(2) Measurements and computed values must be rounded off to the number of places or figures specified for the requirement according to ANSI/ICEA S-84–608–1988, paragraph 1.3.

(r) *Manufacturing irregularities.* (1) Repairs to the shield and/or armor are not permitted in cable supplied to end users under this section.

(2) Minor defects in jackets (defects having a dimension of 3 millimeters (0.125 inch.) or less in any direction) may be repaired by means of heat fusing in accordance with good commercial practices utilizing sheath grade compounds.

(s) *Preparation for shipment.* (1) The cable must be shipped on reels. The diameter of the drum must be large enough to prevent damage to the cable from reeling or unreeling. The reels must be substantial and so constructed as to prevent damage to the cable during shipment and handling.

(2) The thermal wrap must comply with the requirements of ANSI/ICEA S-84–608–1988, paragraph 10.3. When a thermal reel wrap is supplied, the wrap must be applied to the reel and must be suitably secured in place to minimize thermal exposure to the cable during storage and shipment. The use of the thermal reel wrap as a means of reel protection will be at the option of the manufacturer unless specified by the end user.

(3) The outer end of the cable must be securely fastened to the reel head so as to prevent the cable from becoming loose in transit. The inner end of the cable must be securely fastened in such a way as to make it readily available if required for electrical testing. Spikes, staples, or other fastening devices which penetrate the cable jacket must not be used. The method of fastening the cable ends must be acceptable to RUS and accepted prior to its use.

(4) Each length of cable must be wound on a separate reel unless otherwise specified or agreed to by the purchaser.

(5) The arbor hole must admit a spindle 63 millimeters (2.5 inches) in diameter without binding. Steel arbor hole liners may be used but must be accepted by RUS prior to their use.

(6) Each reel must be plainly marked to indicate the direction in which it should be rolled to prevent loosening of the cable on the reel.

(7) Each reel must be stenciled or labeled on either one or both sides with the information specified in ANSI/ICEA S-84–608–1988, paragraph 10.4 and the RUS cable designation:

Cable Designation
BFCE
Cable Construction
Pair Count
Conductor Gauge

E = Expanded Insulation
A = Coated Aluminum Shield
C = Copper Shield
Y = Gopher Resistant Shield
X = Armored, Separate Shield
H = T1 Screened Cable
H1C = T1C Screened Cable
P = Preconnectorized

Example: BFCEXH100–22

Buried Filled Cable, Expanded Insulation, Armored (w/separate shield), T1 Screened Cable, 100 pair, 22 AWG.

(8) When cable manufactured to the requirements of this specification is shipped, both ends must be equipped with end caps acceptable to RUS.

(9) When preconnectorized cables are shipped, the splicing modules must be protected to prevent damage during shipment and handling. The protection method must be acceptable to RUS and accepted prior to its use.

(10) All cables ordered for use in underground duct applications must be equipped with a factory-installed pulling-eye on the outer end in accordance with ANSI/ICEA S-84–608–1988, paragraph 10.5.2.

(The information and recordkeeping requirements of this section have been approved by the Office of Management and Budget (OMB) under the control number 0572–0059)

APPENDIX A TO 7 CFR 1755.890—QUALIFICATION TEST METHODS

(I) The test procedures described in this appendix are for qualification of initial cable designs and major modifications of accepted designs. Included in (V) of this appendix are suggested formats that may to be used in submitting test results to RUS.

(II) *Sample selection and preparation.* (1) All testing must be performed on lengths removed sequentially from the same 25 pair, 22 gauge jacketed cable. This cable must not have been exposed to temperatures in excess of 38° C since its initial cool down after

sheathing. The lengths specified are minimum lengths and if desirable from a laboratory testing standpoint longer lengths may be used.

(a) Length A must be 10 ± 0.2 meters (33 ± 0.5 feet) long and must be maintained at 23 ± 3° C. One length is required.

(b) Length B must be 12 ± 0.2 meters (40 ± 0.5 feet) long. Prepare the test sample by removing the jacket, shield or shield/armor, and core wrap for a sufficient distance on both ends to allow the insulated conductors to be flared out. Remove sufficient conductor insulation so that appropriate electrical test connections can be made at both ends. Coil the sample with a diameter of 15 to 20 times its sheath diameter. Three lengths are required.

(c) Length C must be one meter (3 feet) long. Four lengths are required.

(d) Length D must be 300 millimeters (1 foot) long. Four lengths are required.

(e) Length E must be 600 millimeters (2 feet) long. Four lengths are required.

(f) Length F must be 3 meters (10 feet) long and must be maintained at 23 ± 3° C for the duration of the test. Two lengths are required.

(2) *Data reference temperature.* Unless otherwise specified, all measurements must be made at 23 ± 3° C.

(III) *Environmental tests*—(1) *Heat aging test*—(a) *Test samples.* Place one sample each of lengths B, C, D, and E in an oven or environmental chamber. The ends of Sample B must exit from the chamber or oven for electrical tests. Securely seal the oven exit holes.

(b) *Sequence of tests.* The samples are to be subjected to the following tests after conditioning:

(i) Water Immersion Test outlined in (III)(2) of this appendix;

(ii) Water Penetration Test outlined in (III)(3) of this appendix;

(iii) Insulation Compression Test outlined in (III)(4) of this appendix; and

(iv) Jacket Slip Strength Test outlined in (III)(5) of this appendix.

(c) *Initial Measurements.* (i) For Sample B measure the open circuit capacitance for each odd numbered pair at 1, 150, and 772 kilohertz, and the attenuation at 150 and 772 kilohertz after conditioning the sample at the data reference temperature for 24 hours. Calculate the average and standard deviation for the data of the 13 pairs on a per kilometer or (on a per mile) basis.

(ii) The attenuation at 150 and 772 kilohertz may be calculated from open circuit admittance (Yoc) and short circuit impedance (Zsc) or may be obtained by direct measurement of attenuation.

(iii) Record on suggested formats in (V) of this appendix or on other easily readable formats.

(d) *Heat conditioning.* (i) Immediately after completing the initial measurements, condition the sample for 14 days at a temperature of 65 ± 2° C.

(ii) At the end of this period note any exudation of cable filler. Measure and calculate the parameters given in (III)(1)(c) of this appendix. Record on suggested formats in (V) of this appendix or other easily readable formats.

(iii) Cut away and discard a one meter (3 foot) section from each end of length B.

(e) *Overall electrical deviation.* (i) Calculate the percent change in all average parameters between the final parameters after conditioning and the initial parameters in (III)(1)(c) of this appendix.

(ii) The stability of the electrical parameters after completion of this test must be within the following prescribed limits:

(A) *Capacitance.* The average mutual capacitance must be within 5 percent of its original value;

(B) The change in average mutual capacitance must be less than 5 percent over frequency 1 to 150 kilohertz; and

(C) *Attenuation.* The 150 and 772 kilohertz attenuation must not have increased by more than 5 percent over their original values.

(2) *Water immersion electrical test*—(a) *Test sample selection.* The 10 meter (33 foot) section of length B must be tested.

(b) *Test sample preparation.* Prepare the sample by removing the jacket, shield or shield/armor, and core wrap for sufficient distance to allow one end to be accessed for test connections. Cut out a series of 6 millimeter (0.25 inch.) diameter holes along the test sample, at 30 centimeters (1 foot) intervals progressing successively 90 degrees around the circumference of the cable. Assure that the cable core is exposed at each hole by slitting the core wrapper. Place the prepared sample in a dry vessel which when filled will maintain a one meter (3 foot) head of water over 6 meters (20 feet) of uncoiled cable. Extend and fasten the ends of the cable so they will be above the water line and the pairs are rigidly held for the duration of the test.

(c) *Capacitance testing.* Measure the initial values of mutual capacitance of all odd pairs in each cable at a frequency of 1 kilohertz before filling the vessel with water. Be sure the cable shield or shield/armor is grounded to the test equipment. Fill the vessels until there is a one meter (3 foot) head of water on the cables.

(i) Remeasure the mutual capacitance after the cables have been submerged for 24 hours and again after 30 days.

(ii) Record each sample separately on suggested formats attached or on other easily readable formats.

(d) *Overall electrical deviation.* (i) Calculate the percent change in all average parameters

between the final parameters after conditioning with the initial parameters in (III)(2)(c) of this appendix.

(ii) The average mutual capacitance must be within 5 percent of its original value.

(3) *Water penetration testing.* (a) A watertight closure must be placed over the jacket of length C. The closure must not be placed over the jacket so tightly that the flow of water through pre-existing voids of air spaces is restricted. The other end of the sample must remain open.

(b) Test per Option A or Option B—(i) *Option A.* Weigh the sample and closure prior to testing. Fill the closure with water and place under a continuous pressure of 10 ± 0.7 kilopascals (1.5 ± 0.1 pounds per square inch gauge) for one hour. Collect the water leakage from the end of the test sample during the test and weigh to the nearest 0.1 gram. Immediately after the one hour test, seal the ends of the cable with a thin layer of grease and remove all visible water from the closure, being careful not to remove water that penetrated into the core during the test. Reweigh the sample and determine the weight of water that penetrated into the core. The weight of water that penetrated into the core must not exceed 6 grams.

(ii) *Option B.* Fill the closure with a 0.2 gram sodium fluorscein per liter water solution and apply a continuous pressure 10 ± 0.7 kilopascals (1.5 ± 0.1 pounds per square inch gauge) for one hour. Catch and weigh any water that leaks from the end of the cable during the one hour period. If no water leaks from the sample, carefully remove the water from the closure. Then carefully remove the jacket, shield or shield/ armor, and core wrap one at a time, examining with an ultraviolet light source for water penetration. After removal of the core wrap, carefully dissect the core and examine for water penetration within the core. Where water penetration is observed, measure the penetration distance. The distance of water penetration into the core must not exceed 127 millimeters (5.0 inches).

(4) *Insulation compression test*—(a) *Test sample D.* Remove jacket, shield or shield/armor, and core wrap being careful not to damage the conductor insulation. Remove one pair from the core and carefully separate, wipe off core filler and straighten the insulated conductors. Retwist the two insulated conductors together under sufficient tension to form 10 evenly spaced 360 degree twists in a length of 10 centimeters (4 inches).

(b) *Sample testing.* Center the mid 50 millimeters (2 inches) of the twisted pair between 2 smooth rigid parallel metal plates that are 50 millimeters × 50 millimeters (2 inches × 2 inches). Apply a 1.5 volt direct current potential between the conductors, using a light or buzzer to indicate electrical contact between the conductors. Apply a constant load of 67 newtons (l5 pound-force) on the sample for one minute and monitor for evidence of contact between the conductors. Record results on suggested formats in (V) of this appendix or on other easily readable formats.

(5) *Jacket slip strength test*—(a) *Sample selection.* Test Sample E from (III)(1)(a) of this appendix.

(b) *Sample preparation.* Prepare test sample in accordance with the procedures specified in ASTM D 4565–90a.

(c) *Sample conditioning and testing.* Remove the sample from the tensile tester prior to testing and condition for one hour at 50 ± 2° C. Test immediately in accordance with the procedures specified in ASTM D 4565–90a. A minimum jacket slip strength of 67 newtons (15 pound-force) is required. Record the highest load attained.

(6) *Humidity exposure.* (a) Repeat steps (III)(1)(a) through (III)(1)(c)(iii) of this appendix for separate set of samples B, C, D, and E which have not been subjected to prior environmental conditioning.

(b) Immediately after completing the measurements, expose the test sample to 100 temperature cyclings. Relative humidity within the chamber must be maintained at 90 ± 2 percent. One cycle consists of beginning at a stabilized chamber and test sample temperature of 52 ± 1° C, increasing the temperature to 57 ± 1° C, allowing the chamber and test samples to stabilize at this level, then dropping the temperature back to 52 ± 1° C.

(c) Repeat steps (III)(1)(d)(ii) through (III)(5)(c) of this appendix.

(7) *Temperature cycling.* (a) Repeat steps (III)(1)(a) through (III)(1)(c)(iii) of this appendix for separate set of samples B, C, D, and E which have not been subjected to prior environmental conditioning.

(b) Immediately after completing the measurements, subject the test sample to the 10 cycles of temperature between a minimum of −40° C and +60° C. The test sample must be held at each temperature extreme for a minimum of 1 1/2 hours during each cycle of temperature. The air within the temperature cycling chamber must be circulated throughout the duration of the cycling.

(c) Repeat steps (III)(1)(d)(ii) through (III)(5)(c) of this appendix.

(IV) *Control sample*—(1) *Test samples.* A separate set of lengths A, C, D, E, and F must have been maintained at 23 ± 3° C for at least 48 hours before the testing.

(2) Repeat steps (III)(2) through (III)(5)(c) of this appendix except use length A instead of length B.

(3) *Surge test.* (a) One length of sample F must be used to measure the breakdown between conductors while the other length of F must be used to measure the core to shield breakdown.

(b) The samples must be capable of withstanding without damage, a single surge

voltage of 15 kilovolts peak between conductors, and a 25 kilovolts peak surge voltage between conductors and the shield or shield/armor as hereinafter described. The surge voltage must be developed from a capacitor discharged through a forming resistor connected in parallel with the dielectric of the test sample. The surge generator constants must be such as to produce a surge of 1.5×40 microsecond wave shape.

(c) The shape of the generated wave must be determined at a reduced voltage by connecting an oscilloscope across the forming resistor with the cable sample connected in parallel with the forming resistor. The capacitor bank is charged to the test voltage and then discharged through the forming resistor and test sample. The test sample will be considered to have passed the test if there is no distinct change in the wave shape obtained with the initial reduced voltage compared to that obtained after the application of the test voltage.

(V) The following suggested formats may be used in submitting the test results to RUS:

Environmental Conditioning_____

FREQUENCY 1 KILOHERTZ

Pair Number	Capacitance	
	nF/km (nanofarad/mile)	
	Initial	Final
1	_____	_____
3	_____	_____
5	_____	_____
7	_____	_____
9	_____	_____
11	_____	_____
13	_____	_____
15	_____	_____
17	_____	_____
19	_____	_____
21	_____	_____
23	_____	_____
25	_____	_____
Average $\bar{x}$	_____	_____

Overall Percent Difference in Average $\bar{x}$ _____

Environmental Conditioning_____

FREQUENCY 150 KILOHERTZ

Pair Number	Capacitance		Attenuation	
	nF/km (nanofarad/mile)		dB/km (decibel/mile)	
	Initial	Final	Initial	Final
1	_____	_____	_____	_____
3	_____	_____	_____	_____
5	_____	_____	_____	_____
7	_____	_____	_____	_____
9	_____	_____	_____	_____
11	_____	_____	_____	_____
13	_____	_____	_____	_____
15	_____	_____	_____	_____
17	_____	_____	_____	_____
19	_____	_____	_____	_____
21	_____	_____	_____	_____
23	_____	_____	_____	_____
25	_____	_____	_____	_____
Average $\bar{x}$	_____	_____	_____	_____

Overall Percent Difference in Average $\bar{x}$ Capacitance:_____ Conductance:_____

Environmental Conditioning_____

FREQUENCY 772 KILOHERTZ

Pair Number	Capacitance		Attenuation	
	nF/km (nanofarad/mile)		dB/km (decibel/mile)	
	Initial	Final	Initial	Final
1	_____	_____	_____	_____
3	_____	_____	_____	_____
5	_____	_____	_____	_____
7	_____	_____	_____	_____
9	_____	_____	_____	_____
11	_____	_____	_____	_____
13	_____	_____	_____	_____
15	_____	_____	_____	_____
17	_____	_____	_____	_____
19	_____	_____	_____	_____
21	_____	_____	_____	_____
23	_____	_____	_____	_____
25	_____	_____	_____	_____
Average $\bar{x}$	_____	_____	_____	_____

Overall Percent Difference in Average $\bar{x}$ Capacitance:_____ Conductance:_____

Environmental Conditioning_____

WATER IMMERSION TEST (1 KILOHERTZ)

Pair Number	Capacitance nF/km (nanofarad/mile)		
	Initial	24 Hours	Final
1	_____	_____	_____
3	_____	_____	_____
5	_____	_____	_____
7	_____	_____	_____
9	_____	_____	_____
11	_____	_____	_____
13	_____	_____	_____
15	_____	_____	_____
17	_____	_____	_____
19	_____	_____	_____
21	_____	_____	_____
23	_____	_____	_____
25	_____	_____	_____
Average $\bar{x}$	_____	_____	_____

Overall Percent Difference in Average $\bar{x}$ _____

Water Penetration Test

	Option A		Option B	
	End Leakage grams	Weight Gain grams	End Leakage grams	Penetration mm (in.)
Control.				
Heat Age.				
Humidity Exposure.				
Temperature Cycling.				

Insulation Compression

	Failures
Control	_____
Heat Age	_____
Humidity Exposure	_____
Temperature Cycling	_____

Jacket Slip Strength @ 50° C

	Load in newtons (pound-force)
Control	_____
Heat Age	_____
Humidity Exposure	_____
Temperature Cycling	_____

Filler Exudation (grams)

Heat Age	_____
Humidity Exposure	_____
Temperature Cycling	_____

Surge Test (kilovolts)

Conductor to Conductor	_____
Shield to Conductors	_____

[58 FR 29328, May 20, 1993, as amended at 60 FR 1711, Jan. 5, 1995]

§ 1755.900 RUS specification for filled fiber optic cables.

(a) *Scope.* (1) This section covers the requirement for filled fiber optic cables intended for aerial installation either by attachment to a support strand or by an integrated self-supporting arrangement, for underground application by placement in a duct, or for buried installations either by trenching or by direct plowing.

(i) The optical waveguides are glass fibers having directly-applied protective coatings, and are called ''fibers'', herein. These fibers may be assembled in either loose fiber bundles with a protective core tube, encased in several

protective buffer tubes, or in tight buffer tubes.

(ii) Fillers, strength members, core wraps, and bedding tapes may complete the cable core.

(iii) The core or buffer tubes containing the fibers and the interstices between the buffer tubes, fillers, and strength members in the core structure are filled with a suitable material to exclude water.

(iv) The cable structure is completed by an extruded overall plastic jacket. This jacket may have strength members embedded in it, in some designs.

(v) Buried installation requires an armor under the outer jacket.

(vi) For self-supporting cable the outer jacket may be extruded over the support messenger and cable core.

(2) The cable is fully color coded so that each fiber is distinguishable from every other fiber. A basic color scheme of twenty-four colors allows individual fiber identification. Colored tubes, binders, threads, stripings, or markings provide fiber group identification.

(3) Cable manufactured to this section must demonstrate compliance with the qualification testing requirements to ensure satisfactory end-use performance characteristics for the intended applications.

(4) Optical cable designs not specifically addressed by this section may be allowed if accepted by RUS. Justification for acceptance of a modified design must be provided to substantiate product utility and long term stability and endurance.

(5) All cables sold to RUS borrowers for projects involving RUS loan funds under this section must be accepted by RUS Technical Standards Committee ''A'' (Telephone). For cables manufactured to the specification of this section, all design changes to an accepted design must be submitted for acceptance. RUS will be the sole authority on what constitutes a design change.

(6) The American National Standard Institute/Institute of Electrical and Electronics Engineers, Inc (ANSI/IEEE), 1993 National Electrical Safety Code (NESC) referenced in this section is incorporated by reference by RUS. This incorporation by reference was approved by the Director of the Federal Register in accordance with 5 U.S.C. 552(a) and 1 CFR part 51. Copies of ANSI/IEEE 1993 NESC are available for inspection during normal business hours at RUS, room 2845, U.S. Department of Agriculture, Washington, DC 20250–1500 or at the Office of the Federal Register, 800 North Capitol Street, NW., suite 700, Washington, DC. Copies are available from IEEE Service Center, 445 Hoes Lane, Piscataway, NJ 08854, telephone number 1 (800) 678–4333.

(7) American Society for Testing and Materials Specifications (ASTM) A 640–91, Standard Specification for Zinc-Coated Steel Strand for Messenger Support of Figure 8 Cable; ASTM B 736–92a, Standard Specification for Aluminum, Aluminum Alloy, and Aluminum-Clad Steel Cable Shielding Stock; ASTM D 1238–90b, Standard Test Method for Flow Rates of Thermoplastics by Extrusion Plastometer; ASTM D 1248–84 (1989), Standard Specification for Polyethylene Plastic Molding and Extrusion Materials, ASTM D 1535–89, Standard Test Method for Specifying Color by the Munsell System; ASTM D 3349–86, Standard Test Method for Absorption Coefficient of Carbon Black Pigmented Ethylene Plastic; ASTM D 4565–90a, Standard Test Methods for Physical and Environmental Performance Properties of Insulations and Jackets for Telecommunications Wire and Cable; ASTM D 4566–90, Standard Test Methods for Electrical Performance Properties of Insulations and Jackets for Telecommunications Wire and Cable; ASTM D 4568–86, Standard Test Methods for Evaluating Compatibility Between Cable Filling and Flooding Compounds and Polyolefin Cable Materials; and ASTM E 29–90, Standard Practice for Using Significant Digits in Test Data to Determine Conformance with Specifications, referenced in this section are incorporated by reference by RUS. These incorporations by references were approved by the Director of the Federal Register in accordance with 5 U.S.C. 552(a) and 1 CFR part 51. Copies of ASTM standards are available for inspection during normal business hours at RUS, room 2845, U.S. Department of Agriculture, Washington, DC 20250–1500 or at the Office of the Federal Register, 800 North Capitol Street, NW., suite 700, Washington, DC.

Copies are available from ASTM, 1916 Race Street, Philadelphia, Pennsylvania 19103–1187, telephone number (215) 299–5585.

(8) Electronic Industries Association Standards (EIA)–455–20, Measurement of Change in Optical Transmittance; EIA–455–41, Compressive Loading Resistance of Fiber Optic Cables; EIA–455–86, Fiber Optic Cable Jacket Shrinkage; EIA–455–89A, Fiber Optic Cable Jacket Elongation And Tensile Strength; and EIA–455–174, Mode Field Diameter of Single-Mode Optical Fiber by Knife-Edge Scanning in the Far Field, referenced in this section are incorporated by reference by RUS. These incorporations by references were approved by the Director of the Federal Register in accordance with 5 U.S.C. 552(a) and 1 CFR part 51. Copies of EIA standards are available for inspection during normal business hours at RUS, room 2845, U.S. Department of Agriculture, Washington, DC 20250–1500 or at the Office of the Federal Register, 800 North Capitol Street, NW., suite 700, Washington, DC. Copies are available from Global Engineering Documents, 15 Inverness Way East, Englewood, CO 80112, telephone number (303) 792–2181.

(9) Electronic Industries Association/Telecommunications Industries Association Standards (EIA/TIA)–455–25A, Repeated Impact Testing of Fiber Optic Cables and Cable Assemblies; EIA/TIA–455–30B, Frequency Domain Measurement of Multimode Optical Fiber Information Transmission Capacity; EIA/TIA–455–31B, Fiber Tensile Proof Test Method; EIA/TIA–455–37A, Low or High Temperature Bend Test for Fiber Optic Cable; EIA/TIA–455–45B, Method for Measuring Optical Fiber Geometry Using a Laboratory Microscope; EIA/TIA–455–46A, Spectral Attenuation Measurement for Long-Length, Graded-Index Optical Fibers; EIA/TIA–455–48B, Measurement of Optical Fiber Cladding Diameter Using Laser-Based Instruments; EIA/TIA–455–51A, Pulse Distortion Measurement of Multimode Glass Optical Fiber Information Transmission Capacity; EIA/TIA–455–53A, Attenuation by Substitution Measurement for Multimode Graded-Index Optical Fibers or Fiber Assemblies Used in Long Length Communications Systems; EIA/TIA–455–55B, End-View Methods for Measuring Coating and Buffer Geometry of Optical Fibers; EIA/TIA–455–58A, Core Diameter Measurement of Graded-Index Optical Fibers; EIA/TIA–455–59, Measurement of Fiber Point Defects Using an OTDR; EIA/TIA–455–61, Measurement of Fiber or Cable Attenuation Using an OTDR; EIA/TIA–455–78A, Spectral-Attenuation Cutback Measurement for Single-Mode Optical Fibers; EIA/TIA–455–81A, Compound Flow (Drip) Test for Filled Fiber Optic Cable; EIA/TIA–455–82B, Fluid Penetration Test for Fluid-Blocked Fiber Optic Cable; EIA/TIA–455–85A, Fiber Optic Cable Twist Test; EIA/TIA–455–104A, Fiber Optic Cable Cyclic Flexing Test; EIA/TIA–455–164A, Single-Mode Fiber, Measurement of Mode Field Diameter by Far-Field Scanning; EIA/TIA–455–165A, Mode Field Diameter Measurement Near Field Scanning Technique; EIA/TIA–455–167A, Mode Field Diameter, Variable Aperture in the Far Field; EIA/TIA–455–168A, Chromatic Dispersion Measurement of Multimode Graded-Index and Single-Mode Optical Fibers by Spectral Group Delay Measurement in the Time Domain; EIA/TIA–455–169A, Chromatic Dispersion Measurement of Single-Mode Optical Fibers by the Phase-Shift Method; EIA/TIA–455–170, Cable Cutoff Wavelength of Single-Mode Fiber by Transmitted Power; EIA/TIA–455–173, Coating Geometry Measurement for Optical Fiber Side-View Method; EIA/TIA–455–175A, Chromatic Dispersion Measurement of Single-Mode Optical Fibers by the Differential Phase Shift Method; EIA/TIA–455–176, Method for Measuring Optical Fiber Cross-Sectional Geometry by Automated Grey-Scale Analysis; EIA/TIA–455–177A, Numerical Aperture Measurement of Graded-Index Optical Fibers; EIA/TIA–455–178, Measurements of Strip Force Required for Mechanically Removing Coatings from Optical Fibers; and EIA/TIA–598, Color Coding of Fiber Optic Cables, referenced in this section are incorporated by reference by RUS. These incorporations by references were approved by the Director of the Federal Register in accordance with 5 U.S.C. 552(a) and 1 CFR part 51. Copies of EIA/TIA standards

are available for inspection during normal business hours at RUS, room 2845, U.S. Department of Agriculture, Washington, DC 20250–1500 or at the Office of the Federal Register, 800 North Capitol Street, NW., suite 700, Washington, DC. Copies are available from Global Engineering Documents, 15 Inverness Way East, Englewood, CO 80112, telephone number (303) 792–2181.

(10) RUS intends that the optical fibers contained in the cables manufactured in accordance with this section have characteristics that will allow signals, having a range of wavelengths, to be carried simultaneously.

(b) *Optical fibers.* (1) The solid glass optical fibers must consist of a cylindrical core and cladding covered by either an ultraviolet-cured acrylate or other suitable coating.

(2) The optical fiber types must be one of the following:

(i) Dispersion-unshifted single mode fiber EIA Class IVa;

(ii) Dispersion-shifted single mode fiber EIA Class IVb;

(iii) 50/125 micrometer multimode fiber EIA Class Ia; or

(iv) 62.5/125 micrometer multimode fiber EIA Class Ia.

(3) The dispersion-unshifted single mode fiber core must have either a matched or depressed clad step refractive index profile with a mode-field diameter of 9.0±1.0 micrometers when measured at 1300 nanometers and 10.5+1.0 micrometers/−1.5 micrometers when measured at 1550 nanometers in accordance with any one of the following test methods:

(i) EIA/TIA–455–164A;

(ii) EIA/TIA–455–165A;

(iii) EIA/TIA–455–167A; or

(iv) EIA–455–174.

(4) The dispersion-shifted single mode fiber core must have either a segmented core design or depressed clad step refractive index profile with a mode-field diameter of 7.5+1.5 micrometers/−1.3 micrometers when measured at 1550 nanometers in accordance with any one of the test procedures specified in paragraph (b)(3) of this section.

(5) The core clad off-set of the dispersion-unshifted and dispersion-shifted single mode fibers must not be greater than 1.0 micrometer when measured in accordance with either EIA/TIA–455–45B or EIA/TIA–455–176.

(6) The multimode fiber cores must have graded (parabolic) refractive index profiles with core diameters of 50.0±3.0 micrometers or 62.5±3.0 micrometers when measured in accordance with either EIA/TIA–455–58A, or EIA/TIA–455–176.

(7) The core noncircularity of multimode fibers must not exceed 6 percent when measured in accordance with either EIA/TIA–455–45B or EIA/TIA–455–176.

(8) The outside diameter of the glass fiber for both single mode and multimode fibers must be 125±2.0 micrometers when measured in accordance with any one of the following test methods:

(i) EIA/TIA–455–45B;

(ii) EIA/TIA–455–176; or

(iii) EIA/TIA–455–48B, Methods A or B.

(9) The outside diameter of the glass fiber must be nominally concentric with the fiber core as is consistent with the best commercial practice.

(10) The individual fibers must be proof tested at a minimum tensile stress of 0.35 gigapascal for approximately one second when measured in accordance with EIA/TIA–455–31B.

(11) Factory splices of fibers are allowed provided that prior acceptance from RUS is obtained for the splice technique, that all splices are documented and reported to the customer and that the spliced fiber meets all requirements of this section.

(12) The optical fiber must be coated with a suitable material to preserve the intrinsic strength of the glass having an outside diameter of 250±15 micrometers when measured in accordance with either EIA/TIA–455–55B or EIA/TIA–455–173.

(13) The maximum force required to remove 25 millimeters of protective fiber coating must not exceed 13 newtons when measured in accordance with EIA/TIA–455–178.

(14) All optical fibers in any single length of cable must be of the same type.

(c) *Buffer/coating.* (1) The optical fibers contained in a tube buffer (loose tube), an inner jacket (unit core), a channel or otherwise loosely packaged

must have a clearance between the fibers and the inside of the container sufficient to allow for thermal expansions without constraining the fibers. The protective container must be manufactured from a material having a coefficient of friction sufficiently low to allow the fibers free movement.

(2) Optical fibers covered in near contact with an extrusion (tight tube) must have an intermediate soft buffer to allow for thermal expansions and minor pressures.

(3) All protective coverings in any single length of cable must be continuous and be of the same material except at splice locations.

(4) The protective coverings must be free from holes, splits, blisters, and other imperfections and must be as smooth and concentric as is consistent with the best commercial practice.

(5) Repairs to the fiber coatings are not allowed except at splice locations.

(6) Both loose tube and tight tube coverings of each color and other fiber package types removed from the finished cable must meet the following shrinkback and cold bend performance requirements. The fibers may be left in the tubes.

(i) *Shrinkback.* Testing must be conducted in accordance with ASTM D 4565–90a, paragraph 14.1, using a talc bed at a temperature of 95 °C. Shrinkback must not exceed 5 percent of the original 150 millimeter length of the specimen. The total shrinkage of the specimen must be measured.

(ii) *Cold bend.* Testing must be conducted on at least one tube from each color in the cable. Stabilize the specimen to −20±1 °C for a minimum of four hours. While holding the specimen and mandrel at the test temperature, wrap the tube in a tight helix ten times around a mandrel with a diameter not greater than five times the tube diameter. The tube must show no evidence of cracking when observed with normal or corrected-to-normal vision.

NOTE: Channel cores and similar slotted single component core designs need not be tested for cold bend.

(d) *Fiber and buffer tube identification.* (1) The colors designated for identification of loose buffer tubes, tight tube buffer fibers and individual fibers in multifiber tubes, slots or bundles are shown in the following table:

Buffer tube and fiber No.	Color
1	Blue.
2	Orange.
3	Green.
4	Brown.
5	Slate.
6	White.
7	Red.
8	Black.
9	Yellow.
10	Violet.
11	Rose.
12	Aqua.
13	Blue/Black Tracer.
14	Orange/Black Tracer.
15	Green/Black Tracer.
16	Brown/Black Tracer.
17	Slate/Black Tracer.
18	White/Black Tracer.
19	Red/Black Tracer.
20	Black/Yellow Tracer.
21	Yellow/Black Tracer.
22	Violet/Black Tracer.
23	Rose/Black Tracer.
24	Aqua/Black Tracer.

(2) *Standards of color.* Except for the aqua color, the colors of fibers and tubes supplied in accordance with this section are specified in terms of the Munsell Color System (ASTM D 1535–89) and must comply with the color limits as defined in EIA/TIA–598. (A visual color standard meeting these requirements and entitled ''Munsell Color Charts for Color Coding,'' may be obtained from the Munsell Color Company, Inc., 2441 North Calvert Street, Baltimore, Maryland 21218. The latest edition of the color standard should be used.)

(i) The aqua color limits using the Munsell Color System must be as follows:

MUNSELL NOTATION

Symbol	Aqua color
Centroid	10BG 7/6
H++	5B 7/6
H−−	5BG 7/6
V++	10BG 8/4
V−−	10BG 6/6
C++	None
C−−	10BG 7/4

(ii) Other coloring schemes used for providing identification of buffer tubes and optical fibers which deviate from the requirements of paragraph (d)(1) of this section will not be accepted by RUS.

(e) *Strength members.* (1) Strength members must be an integral part of the cable construction, but are not considered part of the support messenger for self-supporting optical cable.

(2) The combined strength of all the strength members must be sufficient to support the stress of installation and to protect the cable in service.

(3) Strength members may be incorporated into the core as a central support member or filler, as fillers between the fiber packages, as an annular serving over the core, as an annular serving over the intermediate jacket, embedded in the outer jacket or as a combination of any of these methods.

(4) The central support member or filler must contain no more than one splice per kilometer of cable. Individual fillers placed between the fiber packages and placed as annular servings over the core must contain no more than one splice per kilometer of cable. Cable sections having central member or filler splices must meet the same physical requirements as unspliced cable sections.

(5) Strength member materials and splicing techniques must be accepted by RUS prior to their use.

(6) In each length of completed cable having a metallic central member, the dielectric strength between the armor and the metallic center member must withstand at least 15 kilovolts direct current for 3 seconds.

(f) *Forming the cable core.* (1) Protected fibers must be assembled with the optional central support member, fillers and strength members in such a way as to form a cylindrical group.

(2) The standard cylindrical group or core designs shall consist of 4, 6, 8, 10, 12, 16, 18, 20, or 24 fibers. Cylindrical groups or core designs larger than the sizes shown above must meet all the requirements of this section.

(3) When threads or tapes are used as core binders, they must be colored either white or natural and must be a nonhygroscopic and nonwicking dielectric material.

(4) When threads or tapes are used as unit binders to define optical fiber units in loose tube, tight tube, slotted, or bundled cored designs, they must be colored in accordance with the table listed below and must be a nonhygroscopic and nonwicking dielectric material or be rendered such by the filling compound. The colors of the binders must be in accordance with paragraphs (d)(2) introductory text and (d)(2)(i) of this section.

Unit No.	Binder color
1	Blue.
2	Orange.
3	Green.
4	Brown.
5	Slate.
6	White.
7	Red.
8	Black.
9	Yellow.
10	Violet.
11	Rose.
12	Aqua.
13	Blue-Black.
14	Orange-Black.
15	Green-Black.
16	Brown-Black.
17	Slate-Black.
18	White-Black.
19	Red-Black.
20	Black-Black-Yellow.
21	Yellow-Yellow-Black.
22	Violet-Black.
23	Rose-Black.
24	Aqua-Black.

(g) *Filling compound.* (1) To prevent the ingress of water into the core, a filling compound must be applied into the interior of the loose fiber tubes and into the interstices of the core. When a core wrap is used, the filling compound must also be applied to the core wrap, over the core wrap and between the core wrap and inner jacket when required.

(2) The materials must be homogeneous and uniformly mixed; free from dirt, metallic particles and other foreign matter; easily removed; nontoxic and present no dermal hazards.

(3) The individual cable manufacturer must satisfy RUS that the filling compound selected for use is suitable for its intended application. The filling compound must be compatible with the cable components when tested in accordance with ASTM D 4568–86 at a temperature of 80° C.

(h) *Core wrap (optional).* (1) At the option of the manufacturer, one or more layers of nonhygroscopic and nonwicking dielectric material may be applied over the core.

(2) The core wrap(s) can be used to provide a heat barrier to prevent deformation or adhesion between the fiber

tubes or can be used to contain the core.

(3) When core wraps are used, sufficient filling compound must be applied to the core wraps so that voids or air spaces existing between the core wraps and between the core the inner side of the core wrap are minimized.

(i) *Inner jacket.* (1) Inner jackets may be applied directly over the core or over the strength members.

(i) For armored cable an inner jacket is optional but recommended. The inner jacket may absorb stresses in the cable core that may be introduced by armor application or by armored cable installation.

(ii) For unarmored cable an inner jacket is optional.

(2) The inner jacket material and test requirements must be as for the outer jacket material per paragraphs (m)(3) introductory text through (m)(3)(v) of this section, except that either black or natural polyethylene may be used. In the case of natural polyethylene, the requirements for absorption coefficient and the inclusion of furnace black are waived.

(j) *Flooding compound.* (1) Sufficient flooding compound must be applied between the inner jacket and armor and between the armor and outer jacket so that voids and air spaces in these areas are minimized. The use of floodant between the armor and outer jacket is not required when uniform bonding, per paragraph (k)(10) of this section, is achieved between the plastic-clad armor and the outer jacket.

(2) The flooding compound must be compatible with the jacket when tested in accordance with ASTM D 4568–86 at a temperature of 80° C. The floodant must exhibit adhesive properties sufficient to prevent jacket slip when tested in accordance with the requirements of appendix A, paragraph (III)(3), of this section.

(3) The individual cable manufacturer must satisfy RUS that the flooding compound selected for use is acceptable for the application.

(4) In lieu of a flooding compound, water blocking tapes may be applied between the inner jacket and armor and between the armor and outer jacket to prevent water migration. The use of the water blocking tape between the armor and outer jacket is not required when uniform bonding, per paragraph (k)(10) of this section, is achieved between the plastic-clad armor and the outer jacket.

(k) *Armor.* (1) A steel armor, plastic coated on both sides, is required for direct buried cable manufactured under the provisions of this section. An armor is optional for duct and aerial cable as required by the purchaser. The plastic coated steel armor must be applied longitudinally directly over the core wrap or the intermediate jacket and have a minimum overlap of 3.0 millimeters.

(2) The uncoated steel tape must be electrolytic chrome coated steel (ECCS) with a thickness of 0.155 ± 0.015 millimeters.

(3) The reduction in thickness of the armoring material due to the corrugating or to the application process must be kept to a minimum and must not exceed 10 percent at any spot.

(4) The armor of each length of cable must be electrically continuous with no more than one joint or splice allowed per kilometer of cable. This requirement does not apply to a joint or splice made in the raw material by the raw material manufacturer.

(5) The breaking strength of any section of an armor tape, containing a factory splice joint, must not be less than 80 percent of the breaking strength of an adjacent section of the armor of equal length without a joint.

(6) For cables containing no floodant over the armor, the overlap portions of the armor tape must be bonded in cables having a flat, noncorrugated armor to meet the requirements of paragraphs (q)(1) through (q)(7)(ii) of this section. If the tape is corrugated, the overlap portions of the armor tape must be sufficiently bonded and the corrugations must be sufficiently in register to meet the requirements of paragraphs (q)(1) through (q)(7)(ii) of this section.

(7) The armor tape must be so applied as to enable the cable to pass the bend test as specified in paragraph (q)(1) of this section.

(8) The protective coating on the steel armor must meet the Bonding-to-Metal, Heat Sealability, Lap-Shear and Moisture Resistance requirements of

Type I, Class 2 coated metals in accordance with ASTM B 736–92a.

(9) The ability of the plastic-clad metal to resist the flooding compound must be determined as required by ASTM D 4568–86 using a one meter length of coated steel which must be aged for 7 days at 68±1 °C. There must be no delamination of the coating from the steel at the conclusion of the test.

(10) When the jacket is bonded to the plastic coated armor, the bond between the plastic coated armor and the outer jacket must not be less than 525 newtons per meter over at least 90 percent of the cable circumference when tested in accordance with ASTM D 4565–90a. For cables with strength members embedded in the jacket, and residing directly over the armor, the area of the armor directly under the strength member is excluded from the 90 percent calculation.

(l) *Optional support messenger (aerial cable).* (1) When a self-supporting aerial cable containing an integrated support messenger is supplied, the support messenger must comply with the requirements specified in paragraphs (l)(2) introductory text through (l)(6) of this section.

(2) The fully flooded, stranded support messenger must be 6.35 millimeters diameter, 7 wire, extra high strength grade, Class A galvanized steel strand conforming to ASTM A 640–91 with exceptions and additional provisions as follows:

(i) The maximum lay of the individual wires of the strand must be 140 millimeters.

(ii) Any section of a completed strand containing a joint must have minimum tensile strength and elongation of 29,500 newtons and 3.5 percent, respectively, when tested in accordance with the procedures specified ASTM A 640–91.

(iii) The individual wires from a completed strand which contain joints must not fracture when tested according to the ''Ductility of Steel'' procedures specified in ASTM A 640–91 except that the mandrel diameter must be equal to 5 times the nominal diameter of the individual wires.

(3) The support strand must be completely covered with a corrosion protective floodant. The floodant must be homogeneous and uniformly mixed.

(4) The floodant must be nontoxic and present no dermal hazard.

(5) The floodant must be free from dirt, metallic particles, and other foreign matter that may interfere with the performance of the cable.

(6) The floodant must be compatible with the polyethylene outer jacket and must be acceptable to RUS.

(7) Other methods of providing self-supporting cable specifically not addressed in this section may be allowed if accepted by RUS. Justification for acceptance of a modified design must be provided to substantiate product utility and long term stability and endurance.

(m) *Outer jacket.* (1) The outer jacket must provide the cable with a tough, flexible, protective covering which can withstand exposure to sunlight, to atmosphere temperatures and to stresses reasonably expected in normal installation and service.

(2) The jacket must be free from holes, splits, blisters, or other imperfections and shall be as smooth and concentric as is consistent with the best commercial practice.

(3) The raw material used for the outer jacket must be one of the five types listed in paragraphs (m)(3)(i) through (m)(3)(v) of this section. The raw material must contain an antioxidant to provide long term stabilization and the materials must contain a 2.60±0.25 percent concentration of furnace black to provide ultraviolet shielding. Both the antioxidant and furnace black must be compounded into the material by the raw material supplier.

(i) Low density, high molecular weight polyethylene (LDHMW) must conform to the requirements of ASTM D 1248–84(1989), Type I, Class C, Category 4 or 5, Grade J3.

(ii) Low density, high molecular weight ethylene copolymer (LDHMW) must conform to the requirements of ASTM D 1248–84(1989), Type I, Class C, Category 4 or 5, Grade J3.

(iii) Linear low density, high molecular weight polyethylene (LLDHMW) must conform to the requirements of ASTM D 1248–84(1989), Type I, Class C, Category 4 or 5, Grade J3.

(iv) High density polyethylene (HD) must conform to the requirements of ASTM D 1248–84(1989), Type III, Class C, Category 4 or 5, Grade J4.

(v) Medium density polyethylene (MD) must conform to the requirements of ASTM D 1248–84(1989), Type II, Class C, Category 4 or 5, Grade J4.

(vi) Particle size of the carbon selected for use must not average greater than 20 nanometers.

(vii) Absorption coefficient must be a minimum of 400 in accordance with the procedures of ASTM D 3349–86.

(4) The outer jacketing material removed from or tested on the cable must be capable of meeting the following performance requirements:

Property	LLDHMW, ethylene copolymer	LDHMW poly-ethylene	HD or MD poly-ethylene
Melt Flow Rate:			
Percent increase from raw material, Maximum	.....	50	50
<0.41 (Initial Melt Index)	100		
0.41–2.00 (Initial Melt Index)		50	.....
Tensile Strength:			
Minimum, Megapascals	12	12	16.5
Ultimate Elongation:			
Minimum, Percent	400	400	300
Environmental Stress Cracking:			
Maximum, Failures	0/10	2/10	2/10
Shrinkback:			
Maximum, Percent	5	5	5
Impact:			
Maximum, Failures	2/10	2/10	2/10

(5) *Testing procedures.* The procedures for testing jacket specimens for compliance with paragraph (m)(4) of this section must be as follows:

(i) *Melt flow rate.* The melt flow rate must be determined by ASTM D 1238–90b, Condition E. Jacketing material must be free from flooding and filling compound.

(ii) *Tensile strength and ultimate elongation.* Test in accordance with EIA–455–89A, using a jaw separation speed of 500 millimeters per minute for low density material and 50 millimeters per minute for high and medium density materials.

(iii) *Environmental stress cracking.* Test in accordance with ASTM D 4565–90a.

(iv) *Shrinkback.* Test in accordance with the procedures specified in EIA–455–86 using a temperature of 100 ± 1° C for a 4 hour period for low density material and a test temperature of 115 ± 1° C for a 4 hour period for high and medium density materials.

(v) *Impact.* The test must be performed in accordance with ASTM D 4565–90a using an impact force of 4 newton-meters at a temperature of −20 ± 2° C. A cracked or split jacket constitutes failure.

(6) *Jacket thickness.* The nominal outer jacket thickness must not be less than 1.3 millimeters. The test method used must either be the End Sample Method (paragraph (m)(6)(i) of this section) or the Continuous Uniformity Thickness Gauge Method (paragraph (m)(6)(ii) of this section).

(i) *End sample method.* The jacket must be capable of meeting the following requirements:

Minimum Average Thickness: 90 percent (%) of nominal thickness

Minimum Spot Thickness: 70 % of nominal thickness

(ii) *Continuous uniformity thickness gauge.* (A) The jacket must be capable of meeting the following requirements:

Minimum Average Thickness: 75 % of nominal thickness

Minimum Thickness: 70 % of nominal thickness

Maximum Eccentricity: 40 % of nominal thickness

$$\text{Eccentricity} = \frac{\text{Max. Thickness} - \text{Min. Thickness}}{\text{Average Thickness}} \times 100$$

(B) The maximum and minimum thickness values shall be based on the average of each axial section.

(7) For jackets having embedded strength members, the jacket thickness must meet the requirements of paragraph (m)(6) of this section except that the jacket thickness over the strength members must not be less than 0.50 millimeters.

(8) The minimum jacket thickness at any point over the support messenger for self-supporting aerial cable utilizing such an element must be 1.1 millimeters.

(9) The web dimension for self-supporting aerial cable utilizing such a feature must be as follows:

$$\text{Height: } 2.29 \pm 0.750 \text{ millimeters}$$

$$\text{Width: } 1.52 \begin{matrix} +0.51 \text{ millimeters} \\ -0.25 \text{ millimeters} \end{matrix}$$

(n) *Sheath slitting cord (optional).* (1) A sheath slitting cord is optional.

(2) When a sheath slitting cord is used it must be nonhygroscopic and nonwicking or be rendered such by the filling or flooding compound, continuous throughout a length of cable and of sufficient strength to open the sheath over at least a one meter length without breaking the cord at a temperature of 23±5 °C.

(o) *Identification marker and length marker.* (1) Each length of cable must be permanently labeled either Optical Cable, OC, Optical Fiber Cable, or OF on the outer jacket and identified as to manufacturer and year of manufacture.

(2) Each length of cable intended for direct burial installation shall be marked with a telephone handset in compliance with Rule 350G of the 1993 National Electrical Safety Code (NESC).

(3) Mark the number of fibers on the jacket.

(4) The markings must be printed on the jacket at regular intervals of not more than 2 meters.

(5) An alternative method of marking may be used if acceptable to RUS.

(6) The completed cable must have sequentially numbered length markers in Meters or Feet at regular intervals of not more than 2 meters along the outside of the jacket.

(7) Continuous sequential numbering must be employed in a single length of cable.

(8) The numbers must be dimensioned and spaced to produce good legibility and must be approximately 3 millimeters in height. An occasional illegible marking is permissible if there is a legible marking located not more than 2 meters from it.

(9) The method of marking must be by means of suitable surface markings producing a clear distinguishable contrasting marking acceptable to RUS. Where direct or transverse printing is employed, the characters should be indented to produce greater durability of marking. Any other method of length marking must be acceptable to RUS as producing a marker suitable for the field. Size, shape and spacing of numbers, durability and overall legibility of the marker will be considered in acceptance of the method.

(10) Agreement between the actual length of the cable and the length marking on the cable jacket must be within the limits of +1 percent, −0 percent.

(11) The color of the initial marking must be white or silver. If the initial marking fails to meet the requirements of the preceding paragraphs, it will be permissible to either remove the defective marking and re-mark with the white or silver color or leave the defective marking on the cable and re-mark with yellow. No further re-marking is permitted. Any re-marking must be on a different portion of the cable circumference than any existing marking when possible and have a numbering sequence differing from any other existing marking by at least 3,000.

(12) Any reel of cable that contains more than one set of sequential markings must be labeled to indicate the

color and sequence of marking to be used. The labeling must be applied to the reel and also to the cable.

(p) *Optical performance.* (1) The optical performance of the single mode fibers must be in accordance with the requirements specified in paragraphs (p)(1)(i) through (p)(1)(viii) of this section.

(i) The attenuation values of the single mode fibers within the cable must not exceed 0.5 decibel per kilometer (dB/km) for dispersion-unshifted single mode fiber at 1310 and 1550 nanometers and must not exceed 0.5 dB/km for dispersion-shifted single mode fiber at 1550 nanometers. The test method used for measuring the attenuation must be in accordance with either:

(A) EIA/TIA–455–78A; or

(B) EIA/TIA–455–61.

(ii) The attenuation values for wavelengths between 1285 and 1330 nanometers and between 1525 and 1575 nanometers for dispersion-unshifted fibers must not exceed the attenuation at 1310 and 1550 nanometers by more than 0.1 dB/km. The attenuation values for wavelengths between 1525 and 1575 nanometers for dispersion-shifted fibers must not exceed the attenuation at 1550 nanometers by more than 0.1 dB/km. The test method used for measuring the attenuation must be in accordance with any one of the methods specified in paragraph (p)(1)(i) of this section.

(iii) Attenuation discontinuities in the fiber's length must not exceed 0.1 decibel (dB) for dispersion-unshifted fiber at 1310±20 and 1550±20 nanometers and must not exceed 0.1 dB for dispersion-shifted fiber at 1550±20 nanometers when measured in accordance with EIA/TIA–455–59.

(iv) Measurement of the attenuation must be conducted at the wavelength specified for application and must be expressed in decibels per kilometer.

(v) Because the accuracy of attenuation measurements for single mode fibers becomes questionable when measured on short cable lengths, attenuation measurements are to be made utilizing characterization cable lengths. If the ship length of cable is less than one kilometer, the attenuation values measured on longer lengths of cable (characterization length of cable) before cutting to the ship lengths of cable may be applied to the ship lengths.

(vi) For dispersion-unshifted fiber the zero dispersion wavelength must be between 1300 and 1322 nanometers, and the value of the dispersion slope at the zero-dispersion wavelength must not be greater than 0.092 picosecond per nanometer squared times kilometer ($ps/(nm^2 \div km)$) when measured in accordance with either:

(A) EIA/TIA–455–168A;

(B) EIA/TIA–455–169A; or

(C) EIA/TIA–455–175A.

(vii) For dispersion-shifted fiber, the dispersion over the wavelength range between 1525 and 1575 nanometers must not exceed 3.5 picosecond per nanometer times kilometer ($ps/(nm \div km)$) and must have a maximum dispersion slope of 0.095 $ps/(nm^2 \div km)$ at the zero dispersion wavelength when measured in accordance with any one of the test procedures specified in paragraph (p)(1)(vi) of this section.

(viii) The cut off wavelength of the dispersion-unshifted and the dispersion-shifted fibers in a cable must be less than 1260 nanometers when measured in accordance with EIA/TIA–455–170.

(2) The optical performance of the multimode fibers must be in accordance with the requirements specified in paragraphs (p)(2)(i) through (p)(2)(vi) of this section.

(i) The attenuation values of the 50/125 and 62.5/125 micrometer multimode fibers within the cable must not exceed 1.5 dB/km at 1300 nanometers when measured in accordance with either:

(A) EIA/TIA–455–46A;

(B) EIA/TIA–455–53A; or

(C) EIA/TIA–455–61.

(ii) Attenuation discontinuities in the fiber's length must not exceed 0.2 dB for both multimode fiber types at 1300±20 nanometers when measured in accordance with EIA/TIA–455–59.

(iii) Measurement of the attenuation must be conducted at the wavelength specified for application and must be expressed in decibels per kilometer.

(iv) Because the accuracy of attenuation measurements for multimode fibers becomes questionable when measured on short cable lengths, attenuation measurements are to be made

utilizing characterization cable lengths. If the ship length of cable is less than one kilometer, the attenuation values measured on longer lengths of cable (characterization length of cable) before cutting to the ship lengths of cable may be applied to the ship lengths.

(v) The bandwidth of the multimode fibers at the −3 dB optical power of the optical fibers within the cable must be within the limits prescribed in the purchase order.

(vi) The test methods used to measure bandwidth must be in accordance with either EIA/TIA–455–30B or EIA/TIA–455–51A.

(3) Numerical aperture (NA) for each multimode optical fiber in the cable must be 0.20±0.015 for the 50/125 micrometer design and 0.275±0.015 for the 62.5/125 micrometer design when measured in accordance with EIA/TIA–455–177A.

(q) *Mechanical requirements*—(1) *Cable bend test.* (i) All cables manufactured in accordance with the requirements of this section must be capable of meeting the following bend test without exhibiting an increase in fiber attenuation greater than 0.10 dB for single mode fibers and 0.40 dB for multimode fibers.

(ii) Measure the attenuation of dispersion-unshifted single mode fibers at 1310±20 and 1550±20 nanometers, dispersion-shifted single mode fibers at 1550±20 nanometers and multimode fibers at 1300±20 nanometers.

(iii) After measuring the attenuation of the optical fibers, test the cable sample in accordance with EIA/TIA–455–37A, Test Condition E, Turns Test Level 3. The following detailed test conditions shall apply:

(A) Section 4.2—Mandrel diameter must be 20 times the cable diameter.

(B) Section 4.5—Measure the attenuation increase of the wound sample at the test temperature and specified wavelengths in accordance with EIA–455–20.

(C) For armored cable, the armor overlap must be on the outside of the bend.

(D) For self-supporting cable, the jacketed support messenger and connection web must be removed prior to testing.

(iv) The cable may be allowed to warm to room temperature before visual inspection. The bent area of the cable must show neither visible evidence of fracture of the jacket nor delamination of the bond at the overlap and to the outer jacket in nonflooded cable. After removal of the jacket, there must be no visible evidence of fracture of the armor, when present, and of the components in the core.

(2) *Cable impact test.* (i) All cables manufactured in accordance with the requirements of this section must be capable of meeting the following impact test without exhibiting an increase in fiber attenuation greater than 0.10 dB for single mode fibers and 0.40 dB for multimode fibers, and without cracking or splitting of the cable jacket.

(ii) Measure the attenuation of the optical fibers in accordance with paragraph (q)(1)(ii) of this section.

(iii) After measuring the attenuation of the optical fibers, test the cable in accordance with EIA/TIA–455–25A.

(3) *Cable compression test.* (i) All cables manufactured in accordance with the requirements of this section must be capable of meeting the following compressive strength test without exhibiting an increase in fiber attenuation greater than 0.10 dB for single mode fibers and 0.4 dB for multimode and without cracking or splitting of the cable jacket when subjected to a minimum compressive load of 440 newtons per centimeter for armored cable and 220 newtons per centimeter for nonarmored cable.

(ii) Measure the attenuation of the optical fibers in accordance with paragraph (q)(1)(ii) of this section.

(iii) After measuring the attenuation of the optical fibers, test the cable in accordance with EIA–455–41 using a rate of 3 millimeters to 20 millimeters per minute and maintaining the load for 10 minutes.

(4) *Cable twist test.* (i) All cables manufactured in accordance with the requirements of this section must be capable of meeting the following twist test without exhibiting an increase in fiber attenuation greater than 0.10 dB for single mode fibers and 0.40 dB for

multimode fibers, and without cracking or splitting of the cable jacket.

(ii) Measure the attenuation of the optical fibers in accordance with paragraph (q)(1)(ii) of this section.

(iii) After measuring the attenuation of the optical fibers, test the cable in accordance with EIA/TIA–455–85A, using a maximum cable twisting length of 4 meters.

(5) *Cable flex test.* (i) All cables manufactured in accordance with the requirements of this section must be capable of meeting the following flex test without exhibiting an increase in fiber attenuation greater than 0.10 dB for single mode fibers and 0.40 dB for multimode fibers.

(ii) Measure the attenuation of the optical fibers in accordance with paragraph (q)(1)(ii) of this section.

(iii) After measuring the attenuation of the optical fibers, test the cable in accordance with EIA/TIA–455–104A, Test Conditions I and II, flexed for 25 cycles using a sheave diameter not less than 20 times the cable diameter (Test condition letter B).

(iv) After completion of the test, the bent area of the cable must show neither visible evidence of fracture of the jacket nor delamination of the bond at the overlap and to the outer jacket in nonflooded cable. After removal of the jacket, there must be no visible evidence of fracture of the armor, when present, and of the components in the core.

(6) *Water penetration test.* (i) A one meter length of completed fiber optic cable must be preconditioned for 24 hours at 23±5 °C and then tested in accordance with EIA/TIA–455–82B using a one meter water head over the sample or placed under the equivalent continuous pressure for one hour.

(ii) After the one hour period, there must be no water leakage through the sheath interfaces, under the core wrap, between the cable core interstices or through the fiber buffers.

(iii) If water leakage is detected in the first sample, one additional 3 meter sample from EACH END of the same reel must be tested in accordance with paragraph (q)(6)(i) of this section. If either sample exhibits water leakage, the entire reel of cable is to be rejected. If the samples exhibit no leakage, the entire reel of cable is considered acceptable.

(7) *Compound flow test.* (i) Three 300 millimeter long test samples must be preconditioned for 24 hours at 23±5 °C and then tested in accordance with EIA/TIA–455–81A using a test temperature of 80 ± 1 °C.

(ii) The amount of filling or flooding compounds that flowed or dripped from any of the suspended cable specimens must be less than or equal to 0.5 grams of material. The measurement of an amount greater than 0.5 grams for any of the suspended cable specimens constitutes failure.

(r) *Preconnectorized cable (optional).* (1) At the option of the manufacturer and upon request by the purchaser, the cable may be factory terminated with connectors acceptable to RUS.

(2) All connectors must be accepted by RUS prior to their use.

(s) *Acceptance testing and extent of testing.* (1) The tests described in appendix A of this section are intended for acceptance of cable designs and major modifications of accepted designs. What constitutes a major modification is at the discretion of RUS. These tests are intended to show the inherent capability of the manufacturer to produce cable products that have satisfactory performance characteristics, long life and long-term optical stability but are not intended as field tests.

(2) For initial acceptance, the manufacturer must submit:

(i) An original signature certification that the product fully complies with each section of the specification;

(ii) Qualification Test Data, per appendix A of this section;

(iii) A set of instructions for handling the cable;

(iv) OSHA Material Safety Data Sheets for all components;

(v) Agree to periodic plant inspections;

(vi) A certification that the product does or does not comply with the domestic origin manufacturing provisions, of the ''Buy American'' requirements of the Rural Electrification Act of 1938 (52 Stat. 818);

(vii) Written user testimonials concerning field performance of the product; and

(viii) Other nonproprietary data deemed necessary by the Chief, Outside Plant Branch (Telephone).

(3) For requalification acceptance, the manufacturer must submit an original signature certification that the product fully complies with each section of the specification, excluding the Qualification Section, and a certification that the product does or does not comply with the domestic origin manufacturing provisions of the ''Buy American'' requirements of the Rural Electrification Act of 1938 (52 Stat. 818), for acceptance by September 30 every three years. The required data and certification must have been gathered within 90 days of the submission.

(4) Initial and requalification acceptance requests should be addressed to: Chairman, Technical Standards Committee ''A'' (Telephone), Telecommunications Standards Division, Rural Utilities Service, Washington, DC 20250–1500.

(5) *Tests on 100 percent of completed cable.* (i) The armor for each length of cable must be tested for continuity using the procedures of ASTM D 4566–90.

(ii) Attenuation for each optical fiber in the cable must be measured.

(iii) Optical discontinuities must be isolated and their location and amplitude recorded.

(6) *Capability tests.* Tests on a quality assurance basis must be made as frequently as is required for each manufacturer to determine and maintain compliance with:

(i) Numerical aperture and bandwidth of multimode fibers;

(ii) Cut off wavelength of single mode fibers;

(iii) Dispersion of single mode fibers;

(iv) Shrinkback and cold testing of loose tube and tight tube buffers;

(v) Adhesion properties of the protective fiber coating;

(vi) Dielectric strength between the armor and the metallic central member;

(vii) Performance requirements for the inner and outer jacketing materials;

(viii) Performance requirements for the filling and flooding compounds;

(ix) Bonding properties of the coated armoring material;

(x) Sequential marking and lettering;

(xi) Cable bend and cable impact tests;

(xii) Water penetration and compound flow tests;

(xiii) Cable twist, cable flex, and cable compression tests; and

(xiv) Performance requirements of support messenger.

(t) *Records of optical and physical tests.* (1) Each manufacturer must maintain suitable summary records for a period of at least 3 years of all optical and physical tests required on completed cable by this section as set forth in paragraphs (s)(5) and (s)(6) of this section. The test data for a particular reel must be in a form that it may be readily available to RUS upon request. The optical data must be furnished to the purchaser on a suitable and easily readable form.

(2) Measurements and computed values must be rounded off to the number of places or figures specified for the requirement according to ASTM E 29–90.

(u) *Manufacturing irregularities.* (1) Repairs to the armor, when present, are not permitted in cable supplied to end users under this section.

(2) Minor defects in the inner and outer jacket (defects having a dimension of 3 millimeter or less in any direction) may be repaired by means of heat fusing in accordance with good commercial practices utilizing sheath grade compounds.

(3) Buffer tube repair is permitted only in conjunction with fiber splicing.

(v) *Packaging and preparation for shipment.* (1) The cable must be shipped on reels. The diameter of the drum must be large enough to prevent damage to the cable from reeling and unreeling. The reels must be substantial and so constructed as to prevent damage during shipment and handling.

(2) A circumferential thermal wrap or other means of protection complying with the requirements of appendix B of this section must be secured between the outer edges of the reel flange to protect the cable against damage during storage and shipment.

(3) Cable manufactured to the requirements of this section must be sealed at the ends to prevent entrance of moisture. The method of sealing

must be accepted by RUS prior to its use.

(4) The end-of-pull (outer end) of the cable must be securely fastened to prevent the cable from coming loose during transit. The start-of-pull (inner end) of the cable must project through a slot in the flange of the reel, around an inner riser, or into a recess on the reel flange near the drum and fastened in such a way to prevent the cable from becoming loose during installation.

(5) Spikes, staples or other fastening devices must be used in a manner which will not result in penetration of the cable.

(6) The arbor hole must admit a spindle 63.5 millimeters in diameter without binding. Steel arbor hole liners may be used but must be accepted by RUS prior to their use.

(7) Each reel must be plainly marked to indicate the direction in which it should be rolled to prevent loosening of the cable on the reel.

(8) Each reel must be stenciled or lettered with the name of the manufacturer.

(9) The following information must be either stenciled on the reel or on a tag firmly attached to the reel:

Optical Cable
Number of Fibers
Armored or Nonarmored
Year of Manufacture
Name of Cable Manufacturer
Length of Cable
Reel Number
RUS 7 CFR 1755.900

Example:

Optical Cable
4 fiber
Armored
1988
XYZ Company
1050 meters
Reel Number 3
RUS 7 CFR 1755.900

(10) When preconnectorized cable is shipped, the splicing modules must be protected to prevent damage during shipment and handling. The protection method must be accepted by RUS prior to its use.

(The information collection and recordkeeping requirements of this section have been approved by the Office of Management and Budget (OMB) under control number 0572–0059)

APPENDIX A TO 7 CFR 1755.900—QUALIFICATION TESTS METHODS

(I) The test procedures described in this appendix are for qualification of initial cable designs and major modifications of accepted designs. Included in (V) of this appendix are suggested formats that may be used in submitting test results to RUS.

(II) Sample selection and preparation. (1) All testing must be performed on lengths removed sequentially from any of the same cables listed below. The cables must not have been exposed to temperatures in excess of 38°C since their initial cool downs after sheathing. The lengths specified are minimum lengths and if desirable from a laboratory testing standpoint longer lengths may be used:

(a) 12 single mode fiber jacketed cable consisting of 6 single mode dispersion-unshifted fibers and 6 single mode dispersion-shifted fibers.

(b) 12 multimode fiber jacketed cable consisting of 6 50/125 micrometer multimode fibers and 6 62.5/125 micrometer multimode fibers.

(c) 24 fiber jacketed combination cable consisting of 6 single mode dispersion-unshifted fibers; 6 single mode dispersion-shifted fibers; 6 50/125 micrometer multimode fibers; and 6 62.5/125 micrometer multimode fibers.

(2) Length A shall be a minimum of 500 meters long. Coil the sample with a diameter of 50 to 75 times its sheath diameter. Three lengths are required if only requesting acceptance for either single mode fiber cable (a), multimode fiber cable (b), or using the combination fiber cable (c). Six lengths, 3 lengths of single mode fiber cable (a), and 3 lengths of multimode fiber cable (b), are required if requesting acceptance for both single mode and multimode fiber cables.

(3) Length B shall be one meter long. Four lengths of either single mode fiber cable (a), multimode fiber cable (b) or the combination fiber cable (c) are required.

(4) Length C shall be 600 millimeters long. Four lengths of either single mode fiber cable (a), multimode fiber cable (b) or the combination fiber cable (c) are required.

(5) Data reference temperature. Unless otherwise specified, all measurement shall be made at 23±5°C.

(III) *Environmental tests*—(1) *Heat aging test.* (a) *Test samples.* Place one or two samples of length A and one sample each of lengths B and C in an oven or environmental chamber. The ends of sample A must exit from the chamber or oven for optical tests. Securely seal the oven exit holes.

(b) *Sequence of tests.* The samples are to be subjected to the following tests after conditioning:

(i) Water Penetration Test outlined in paragraph (III) (2) of this appendix; and

(ii) Jacket Slip Strength Test outlined in paragraph (III) (3) of this appendix. (For Flooded Designs Only)

(c) *Initial measurements.* (i) For sample(s) A measure the attenuation for the single mode dispersion-unshifted fibers at 1310 and 1550 nanometers, for single mode dispersion-shifted fibers at 1550 nanometers and/or for multimode fibers at 1300 nanometers at a temperature of 23±5°C. Also measure the bandwidth of the multimode fibers. Calculate the attenuation data on a per kilometer basis. Calculate the bandwidth data on a megahertz-kilometer (MHz-km) basis.

(ii) Record on suggested formats in (V) of this appendix or on other easily readable formats.

(d) *Heat conditioning.* (i) Immediately after completing the initial measurements, condition the sample(s) for 14 days at a temperature of 65±2°C.

(ii) At the end of this period note any exudation of cable filler. Measure the parameters given in paragraph (III)(1)(c) of this appendix. Record on suggested formats in (V) of this appendix or on other easily readable formats.

(e) *Overall optical deviation.* (i) Calculate the change in all parameters between the final parameters after conditioning with initial parameters in paragraph (III)(1)(c) of this appendix.

(ii) The stability of the optical parameters after completion of this test must be within the following prescribed limits:

(A) *Attenuation.* The attenuation of each multimode fiber must not change by more than 0.3 db/km and the attenuation of each single mode fiber must not change by more than 0.1 dB/km.

(B) *Bandwidth.* The bandwidth of each multimode fiber must not change by more than 15 percent from their original values.

(2) *Water penetration testing.* (a) A watertight closure must be placed over the jacket of length B from paragraph (III)(1)(a) of this appendix. The closure must not be placed over the jacket so tightly that the flow of water through pre-existing voids or air spaces is restricted. The other end of the sample must remain open.

(b) Test per Option A or Option B. (i) *Option A.* Weigh the sample and closure prior to testing. Fill the closure with water and place under a continuous pressure of 10 ± 0.7 kilopascals for one hour. Collect the water leakage from the end of the test sample during the test and weigh to the nearest 0.1 gram. Immediately after the one hour test, seal the ends of the cable with a thin layer of grease and remove all visible water from the closure, being careful not to remove water that penetrated into the core during the test. Reweigh the sample and determine the weight of water that penetrated into the core.

(ii) *Option B.* Fill the closure with a 0.2 gram sodium fluorscein per liter water solution and apply a continuous pressure of 10 ± 0.7 kilopascals for one hour. Catch and weigh any water that leaks from the end of the cable during the one hour period. If no water leaks from the sample, carefully remove the water from the closure. Then carefully remove the outer jacket, armor, if present, inner jacket, if present, and core wrap one at a time, examining with an ultraviolet light source for water penetration. After removal of the core wrap, carefully dissect the core and examine for water penetration within the core. Where water penetration is observed, measure the penetration distance.

(3) *Jacket slip strength test.* (For Flooded Design Only) (a) *Sample selection.* Test sample C from paragraph (III)(1)(a) of this appendix.

(b) *Sample preparation.* Prepare test sample in accordance with the procedures specified in ASTM D 4565–90a.

(c) *Sample conditioning and testing.* Remove the sample from the tensile tester prior to testing and condition for one hour at 50 ± 2°C. Test immediately in accordance with the procedures specified in ASTM D 4565–90a. A minimum jacket slip strength of 67 newtons is required. Record the load attained on the suggested formats in (V) of this appendix or on other easily readable formats.

(4) *Temperature and humidity exposure.* (a) Repeat paragraphs (III)(1)(a) through (III)(1)(c)(ii) of this appendix for separate set of samples A, B and C which have not been subjected to prior environmental conditioning.

(b) Immediately after completing the measurements, expose the test sample to 100 temperature cyclings. Relative humidity within the chamber shall be maintained at 90 ± 2 percent. One cycle consists of beginning at a stabilized chamber and test sample temperature of 52 ± 2°C, increasing the temperature to 57 ± 2°C, allowing the chamber and test samples to stabilize at this level, then dropping the temperature back to 52 ± 2°C.

(c) Repeat paragraphs (III)(1)(d)(ii) through (III)(3)(c) of this appendix.

(5) *Temperature cycling.* (a) Repeat paragraphs (III)(1)(a) through (III)(1)(c)(ii) of this appendix for separate set of samples A, B, and C which have not been subjected to prior environmental conditioning.

(b) Immediately after completing the measurements, subject the test sample to 10 cycles of temperature between −40°C and +60°C. The test sample must be held at each temperature extreme for a minimum of 1½ hours during each cycle of temperature. The air within the temperature cycling chamber must be circulated throughout the duration of the cycling.

(c) Repeat paragraphs (III)(1)(d)(ii) through (III)(3)(c) of this appendix.

(IV) *Control sample*—(a) *Test samples.* A separate set of lengths B and C must have been

maintained at 23 ± 5°C for at least 48 hours before the testing.

(b) Repeat paragraphs (III)(2) through (III)(3)(c) of this appendix for these samples.

(V) The following suggested formats may be used in submitting the test results to RUS:

HEAT AGING TEST—SINGLE MODE CABLE

Fiber No.	Attenuation—1310 nm dB/km			Attenuation—1550 nm dB/km		
	Initial	Final	Change	Initial	Final	Change
1						
2						
3						
4						
5						
6						
7						
8						
9						
10						
11						
12						

HEAT AGING TEST—MULTIMODE CABLE

Fiber No.	Attenuation—1300 nm dB/km			Bandwidth dB/km		
	Initial	Final	Change	Initial	Final	Change (%)
1						
2						
3						
4						
5						
6						
7						
8						
9						
10						
11						
12						

HEAT AGING TEST—COMBINATION CABLE

Fiber No.	Attenuation—1310 nm dB/km			Attenuation—1550 nm dB/km			Bandwidth MHz-km		
	Initial	Final	Change	Initial	Final	Change	Initial	Final	Change (%)
1									

HEAT AGING TEST—COMBINATION CABLE—Continued

Fiber No.	Attenuation—1310 nm dB/km			Attenuation—1550 nm dB/km			Bandwidth MHz-km		
	Initial	Final	Change	Initial	Final	Change	Initial	Final	Change (%)
2									
3									
4									
5									
6									
7									
8									
9									
10									
11									
12									
13									
14									
15									
16									
17									
18									
19									
20									
21									
22									
23									
24									

TEMPERATURE/HUMIDITY TEST—SINGLE MODE CABLE

Fiber No.	Attenuation—1310 nm dB/km			Attenuation—1550 nm dB/km		
	Initial	Final	Change	Initial	Final	Change
1						
2						
3						
4						
5						
6						
7						
8						
9						
10						
11						
12						

TEMPERATURE/HUMIDITY TEST—MULTIMODE CABLE

Fiber No.	Attenuation—1300 nm dB/km			Bandwidth MHz-km		
	Initial	Final	Change	Initial	Final	Change
1						
2						
3						
4						
5						
6						
7						
8						
9						
10						
11						
12						

TEMPERATURE/HUMIDITY TEST—COMBINATION CABLE

Fiber No.	Attenuation—1310 nm dB/km			Attenuation—1550 nm dB/km			Bandwidth MHz-km		
	Initial	Final	Change	Initial	Final	Change	Initial	Final	Change (%)
1									
2									
3									

TEMPERATURE/HUMIDITY TEST—COMBINATION CABLE—Continued

Fiber No.	Attenuation—1310 nm dB/km			Attenuation—1550 nm dB/km			Bandwidth MHz-km		
	Initial	Final	Change	Initial	Final	Change	Initial	Final	Change (%)
4									
5									
6									
7									
8									
9									
10									
11									
12									
13									
14									
15									
16									
17									
18									
19									
20									
21									
22									
23									
24									

TEMPERATURE CYCLING TEST—SINGLE MODE CABLE

Fiber No.	Attenuation—1310 nm dB/km			Attenuation—1550 nm dB/km		
	Initial	Final	Change	Initial	Final	Change
1						
2						
3						
4						
5						
6						
7						
8						
9						
10						
11						
12						

TEMPERATURE CYCLING—MULTIMODE CABLE

Fiber No.	Attenuation—1300 nm dB/km			Bandwidth MHz–km		
	Initial	Final	Change	Initial	Final	Change (%)
1						
2						
3						
4						
5						
6						
7						
8						
9						
10						
11						
12						

TEMPERATURE CYCLING TEST COMBINATION CABLE

Fiber No.	Attenuation—1310 nm dB/km			Attenuation—1550 nm dB/km			Bandwidth MHz-km		
	Initial	Final	Change	Initial	Final	Change	Initial	Final	Change (%)
1									
2									
3									

TEMPERATURE CYCLING TEST COMBINATION CABLE—Continued

Fiber No.	Attenuation—1310 nm dB/km			Attenuation—1550 nm dB/km			Bandwidth MHz-km		
	Initial	Final	Change	Initial	Final	Change	Initial	Final	Change (%)
4									
5									
6									
7									
8									
9									
10									
11									
12									
13									
14									
15									
16									
17									
18									
19									
20									
21									
22									
23									
24									

WATER PENETRATION TEST

	Option A		Option B	
	End leakage grams	Weight gain grams	End leakage grams	Penetration millimeters
Control				
Heat Age				
Humidity Exposure				
Temperature Cycling ..				

JACKET SLIP STRENGTH @ 50°C

	Load in Newtons
Control	
Heat Age	
Humidity Exposure	
Temperature Cycling	

JACKET SLIP STRENGTH @ 50°C—Continued

	Filler Exudation (grams)
Heat Age	
Humidity Exposure	
Temperature Cycle	

APPENDIX B TO 7 CFR 1755.900—THERMAL REEL WRAP QUALIFICATION

(I) The test procedures described in this appendix are only for qualification of initial and subsequent changes in thermal reel wraps.

(II) *Sample selection.* All testing must be performed on two 450 millimeter lengths of cable removed sequentially from the same fiber jacketed cable. This cable must not have been exposed to temperatures in excess

of 38 °C since its initial cool down after sheathing.

(III) *Test procedure.* (1) Place the two samples on an insulating material such as wood.

(2) Tape thermocouples to the jackets of each sample to measure the jacket temperature.

(3) Cover one sample with the thermal reel wrap.

(4) Expose the samples to a radiant heat source capable of heating the uncovered jacket sample to a minimum of 71 °C. A GE 600 watt photoflood lamp or an equivalent lamp having the light spectrum approximately that of the sun shall be used.

(5) The height of the lamp above the jacket shall be 380 millimeters or an equivalent height that produces the 71 °C jacket temperature on the unwrapped sample shall be used.

(6) After the samples have stabilized at the temperature, the jacket temperatures of the samples shall be recorded after one hour of exposure to the heat source.

(7) Compute the temperature difference between jackets.

(8) For the thermal reel wrap to be acceptable to RUS, the temperature difference between the jacket with the thermal reel wrap and the jacket without the reel wrap shall be greater than or equal to 17 °C.

[59 FR 34360, July 5, 1994; 59 FR 44795, Aug. 30, 1994, as amended at 60 FR 1711, Jan. 5, 1995]

§ 1755.910 RUS specification for outside plant housings and serving area interface systems.

(a) *Scope.* (1) The purpose of this specification is to inform manufacturers and users of outside plant housings and serving area interface (SAI) systems of the engineering and technical requirements that are considered necessary for satisfactory performance in outside plant environments. Included are the mechanical, electrical, and environmental requirements, desired design features, and test methods for evaluation of the product.

(2) The housing and terminal requirements reflect the best engineering judgment available at the present time and may be subject to change due to advances in technology, economic conditions, or other factors.

(3) The test procedures described in this section are required by RUS to demonstrate the functional reliability of the product. However, other standard or unique test procedures may serve the same function. In such cases, RUS shall evaluate the test procedures and results on an individual basis.

(4) The test procedures specified herein satisfy the requirements of housings as well as the requirements of terminals that may be installed within housings. Some of the requirements are interrelated to several tests designed to determine the performance aspects of terminals and are directly affected by testing required for housings. Therefore, the manufacturer should carefully review all the test requirements in order to develop a testing schedule that is comprehensive, efficient in terms of the number of test specimens required and can be accomplished in an orderly and logical sequence.

(5) The specified tests may require special facilities to comply with Federal, State, or local regulatory requirements. Some test procedures are potentially hazardous to personnel because of the high voltages and mechanical forces involved. Safety precautions are necessary to prevent injury.

(6) Underwriters Laboratories, Inc. (UL) 94, Tests for Flammability of Plastic Materials for Parts in Devices and Appliances, fourth edition, dated June 18, 1991, referenced in this section is incorporated by reference by RUS. This incorporation by reference was approved by the Director of the Federal Register in accordance with 5 U.S.C. 552(a) and 1 CFR part 51. A copy of the UL standard is available for inspection during normal business hours at RUS, room 2845–S, U.S. Department of Agriculture, Washington, DC 20250–1500 or at the Office of the Federal Register, 800 North Capitol Street, NW., suite 700, Washington, DC. Copies are available from UL Inc., 333 Pfingsten Road, Northbrook, Illinois 60062–2096, telephone number (708) 272–8800.

(7) The American Society for Testing and Materials Specifications (ASTM) A 109–91, Standard Specification for Steel, Strip, Carbon, Cold-Rolled; ASTM A 153–82 (Reapproved 1987), Standard Specification for Zinc Coating (Hot-Dip) on Iron and Steel Hardware; ASTM A 366/A 366M–91, Standard Specification for Steel, Sheet, Carbon, Cold-Rolled, Commercial Quality; ASTM A 525–91b, Standard Specification for General Requirements for Steel Sheet, Zinc-Coated (Galvanized) by the Hot-Dip Process; ASTM A 526/A

526M–90, Standard Specification for Steel Sheet, Zinc-Coated (Galvanized) by the Hot-Dip Process, Commercial Quality; ASTM A 569/A 569M–91a, Standard Specification for Steel, Carbon (0.15 Maximum, Percent), Hot-Rolled Sheet and Strip Commercial Quality; ASTM A 621/A 621M–92, Standard Specification for Steel, Sheet and Strip, Carbon, Hot-Rolled, Drawing Quality; ASTM B 117–90, Standard Test Method of Salt Spray (Fog) Testing; ASTM B 539–90, Standard Test Methods for Measuring Contact Resistance of Electrical Connections (Static Contacts); ASTM B 633–85, Standard Specification for Electrodeposited Coatings of Zinc on Iron and Steel; ASTM D 523–89, Standard Test Method for Specular Gloss; ASTM D 610–85 (Reapproved 1989), Standard Test Method for Evaluating Degree of Rusting on Painted Steel Surfaces; ASTM D 822–89, Standard Practice for Conducting Tests on Paint and Related Coatings and Materials using Filtered Open-Flame Carbon-Arc Light and Water Exposure Apparatus; ASTM D 1535–89, Standard Test Method for Specifying Color by the Munsell System; ASTM D 1654–92, Standard Test Method for Evaluation of Painted or Coated Specimens Subjected to Corrosive Environments; ASTM D 1693–70 (Reapproved 1988), Standard Test Method for Environmental Stress-Cracking of Ethylene Plastics; ASTM D 2197–86 (Reapproved 1991), Standard Test Method for Adhesion of Organic Coatings by Scrape Adhesion; ASTM D 2247–92, Standard Practice for Testing Water Resistance of Coatings in 100% Relative Humidity; ASTM D 2565–92, Standard Practice for Operating Xenon Arc-Type Light-Exposure Apparatus With and Without Water for Exposure of Plastics; ASTM D 2794–92, Standard Test Method for Resistance of Organic Coatings to the Effects of Rapid Deformation (Impact); ASTM D 3928–89, Standard Test Method for Evaluation of Gloss or Sheen Uniformity; ASTM D 4568–86, Standard Test Methods for Evaluating Compatibility Between Cable Filling and Flooding Compounds and Polyolefin Cable Materials; ASTM G 21–90, Standard Practice for Determining Resistance of Synthetic Polymeric Materials to Fungi; and ASTM G 23–90, Standard Practice for Operating Light-Exposure Apparatus (Carbon-Arc Type) With and Without Water for Exposure of Nonmetallic Materials, referenced in this section are incorporated by reference by RUS. These incorporations by references were approved by the Director of the Federal Register in accordance with 5 U.S.C. 552(a) and 7 CFR part 51. Copies of the ASTM standards are available for inspection during normal business hours at RUS, room 2845–S, U.S. Department of Agriculture, Washington, DC 20250–1500 or at the Office of the Federal Register, 800 North Capitol Street, NW., suite 700, Washington, DC. Copies are available from ASTM, 1916 Race Street, Philadelphia, Pennsylvania 19103–1187, telephone number (215) 299–5585.

(b) *General information.* (1) Outside plant housings are fabricated of either metallic or nonmetallic materials in different sizes and configurations to suit a variety of applications. The purpose of a housing is to protect its contents from environmental elements, rodents, insects, or vandalism and unauthorized access. Housings are designed with internal brackets for accommodating splicing, bonding and grounding connections, cable terminals, cross-connect facilities, load coils, and optical and electronic equipment.

(2) Pedestals are housings primarily intended to house, organize, and protect cable terminations incorporating terminal blocks, splice connectors and modules, ground lugs and load coils. Activities typically performed in a pedestal are cable splicing, shield bonding and grounding, inductive loading, and connection of subscriber drops.

(3) Serving area interface (SAI) cabinets are housings intended to perform some of the same functions as pedestals but are primarily intended to serve as the connecting terminal between feeder cable and distribution cables.

(4) Outside plant housings shall be manufactured in accordance with National Electrical Code (NEC) requirements, Underwriters' Laboratories (UL) requirements, Department of Labor, Occupational Safety and Health Administration Standards (OSHA), and all other applicable Federal, State, and local requirements including, but not

limited to, statutes, rules, regulations, orders, or ordinances otherwise imposed by law.

(c) *General documentation requirements*—(1) *Installation and maintenance instructions.* (i) Each product shall have available a set of instructions designed to provide sufficient information for the successful installation of the housing, cables, auxiliary equipment, and the associated splice preparation. The instructions shall be of sufficient size to be easily read and shall be printed using waterproof ink. Pedestal instruction sheets shall include a list of miscellaneous replacement parts that may be purchased locally. SAI systems shall be supplied with complete instructions for installation and use.

(ii) When requested by RUS, or an RUS borrower, the manufacturer shall prepare a training package for the purpose of training technicians in the use and installation of the product and its auxiliary equipment.

(iii) The manufacturer shall provide ordering information for repair parts. Repair parts shall be obtainable through a local distributor or shall be easily obtainable. Information describing equivalent parts and their sources should be provided for those parts that may also be obtained from other sources.

(2) *Quality assurance.* The manufacturer shall demonstrate the existence of an ongoing quality assurance program that includes controls, procedures, and standards used for vendor certification, source inspection, incoming inspection, manufacture, in process testing, calibration and maintenance of tools and test equipment, final product inspection and testing, periodic qualification testing and control of nonconforming materials and products. The manufacturer shall maintain quality assurance records for five years.

(3) *RUS acceptance applications.* (i) The tests described in this specification are required for acceptance of product designs and major modifications of accepted designs. All modifications shall be considered major unless otherwise declared by RUS. The tests are intended to show the inherent capability of the manufacturer to produce products which have an expected service life of 30 years.

(ii) For initial acceptance the manufacturer shall:

(A) Submit an original signature certification that the product complies with each section of the specification;

(B) Provide qualification test data;

(C) Provide OSHA Material Safety Data Sheets for the product;

(D) Provide a detailed explanation concerning the intended use and capacity of the product;

(E) Provide a complete set of instructions, recommendations for equipment organization and splicing;

(F) Agree to periodic plant inspections;

(G) Provide a certification that the product does or does not comply with the domestic origin manufacturing provisions of the ''Buy American'' requirements of the Rural Electrification Act of 1938 (52 Stat. 818);

(H) Provide user testimonials concerning field performance of the product;

(I) Provide product samples if requested by RUS; and

(J) Provide any other data required by the Chief, Outside Plant Branch (Telephone).

(iii) Each requirement of this section must be addressed in submissions for acceptance. The designation N/A may be entered when the requirements do not apply.

(iv) Acceptance requests should be addressed to: Chairman, Technical Standards, Committee ''A'' (Telephone), Telecommunications Standards Division, Rural Utilities Service, Washington, DC 20250–1500.

(d) *Functional design criteria for housings*—(1) *General requirements.* (i) The functional requirements for housings concern materials, finishes, environmental factors, and design features that are applicable to most above ground housings used in the outside plant.

(ii) Housings shall be of sufficient size to permit easily managed installation, operational, testing, and maintenance operations. The general shape of outside plant housings is usually comparable to that of a rectangular column or cylinder, with the shape of any particular housing being left to the manufacturer's discretion. Each design is subject to acceptance by RUS.

(2) *Housing types and capacities.* (i) Housings used in outside plant are either the smaller housings generally known as pedestals or larger housings known as equipment or splice cabinets. Both categories may have designs intended for stake mounting, pole mounting, or pad mounting.

(ii) The classifications of pedestals are the general purpose channel Type (H) and the dome Type (M). The Type H pedestal has either front only access or back and front access while the Type M pedestal has top only access. Pedestals are further designated as follows:

Stake mounted	Type	Pole mounted	Pole mounted (extra high)
BD3	H	BD3A	
BD4	H	BD4A	
BD5	H	BD5A	
BD7	H	BD7A	
BD14	M	BD14A	BD14AG
BD15	M	BD15A	BD15AG
BD16	M	BD16A	BD16AG

(iii) The minimum volume associated with the pedestal designations shall be as shown in the following table:

Pedestal[1] housing designation	Minimum volume	
	Cubic centimeters cm^3	(Cubic Inches) ($in.^3$)
BD3, BD3A [2]	9,000	(550)
BD4, BD4A [2]	15,000	(900)
BD5, BD5A [2]	35,000	(2,100)
BD7([2])	72,000	(4,400)
BD14, BD14A, BD14AG [3]	9,000	(550)
BD15, BD15A, BD15AG [3]	27,000	(1,600)
BD16, BD16A, BD16AG [3]	38,000	(2,300)

Note 1: Housings designed for unique purposes will be evaluated on a case-by-case basis.

Note 2: For Type H pedestals, the minimum volume is that space as measured 5 centimeters (cm) (2 inches (in.)) below the top of the housing to a point 40 cm (16 in.) above the bottom of the lower cover plate.

Note 3: The minimum volume of the Type M pedestals shall be the space within the dome measured from the lower edge of the dome to a point 5 cm (2 in.) from the top.

(iv) Equipment cabinets intended for use as SAI housings shall be assigned size designations according to their maximum pair termination capacities. The capacity will vary depending on the type of terminating equipment used. SAI cabinets shall be suffix designated with an ''A'' for pole mounting, ''X'' for pad mounting, and ''S'' for stake mounting.

(v) Large pair count splice cabinets are classified according to their splice capacity. Approximately 48 cm^3 (3.0 $in.^3$) of splice area per pair straight spliced shall be permitted.

(vi) The minimum volume associated with large pair count splice cabinets shall be as shown in the following table:

Splice cabinet[1] designation	Minimum volume		Maximum splice capacity (pairs)
	($cm.^3$)	($in.^3$)	
BD6000	295,000	(18,000)	6,000
BD8000	393,000	(24,000)	8,000
BD10000	491,000	(30,000)	10,000

Note 1: Additional sizes of splice cabinets shall be considered by RUS on a case-by-case basis.

(3) *Design and fabrication requirements for housings.* (i) Type H pedestal housings may consist of an enclosed channel incorporating an integrally mounted stake that serves as a backplate, or they may be designed for universal mounting on stakes or poles. The body of the housing shall have two major components; an upper cover and a base cover. The upper cover shall have a top, front and back plate with the front cover removable to permit entry and provide increased work space. The base cover shall consist of a front plate and back plate. The base cover back plate may be an extension of the upper back plate cover.

(ii) Type M pedestal housings shall consist of a one piece upper sleeve designed to fit over the base cover trapping air to prohibit water from entering the splice area when installed in locations prone to temporary flooding. Pedestals designed to be mounted extra high on poles for locations susceptible to deep snow shall have a bottom close-off option available to prohibit the ingress of birds, rodents and insects.

(iii) The external housing components on all outside plant housings shall provide reasonable protection against accidental removal or vandalism. Housings shall be equipped with a cover plate retaining bolt and cup washer that may be opened only with an industry accepted socket type can wrench. Housings may be equipped with provisions to allow the purchaser to install a padlock.

(iv) Installed housings shall resist the disassembling force of frost heaving applied to the bottom of ground line cover plates. The base cover must

remain stationary to stabilize the contents of the housing cavity.

(v) In an effort to provide protection against dust penetration, blowing snow, rain, and ultraviolet light degradation of internal components, all mechanical gaps shall be restricted. The use of seals, overlaps, gaskets, and/or dovetailing is required to assure satisfactory protection of housed equipment.

(vi) Knockouts, cutouts, or notches designed to accommodate aerial service drops shall not be permitted. A design option for housings intended to accommodate service drops shall include a separate channel or equivalent in the base cover to allow future additions of service drops without the removal of gravel or the moisture barrier in the base of the housing. Service wire channels must be designed to prevent the entry of birds, reptiles, rodents and insects.

(vii) Minimal venting of SAI housings may be necessary to relieve internal pressure and condensation.

(viii) There shall be no aluminum housing components that will become buried in the soil when the housing is properly installed.

(ix) Housing components may be assembled using rivets, welds, glue, bolts and nuts, or other techniques suitable for the materials involved.

(x) Housings and their components that require field assembly must be capable of being assembled with tools normally available to outside plant technicians.

(xi) Hinged doors on SAI housings and large pair count splice housings shall be equipped with a device that restrains the doors in the open position.

(xii) Outside plant housings shall be free of sharp edges, burrs, etc., that could present a safety hazard to personnel involved in installation and use of the product or to the general public. Surfaces inside housings must not allow pinching of conductors during installation of cover plates or the opening and closing of doors.

(xiii) A ground line mark shall be provided, approximately 15 cm (6 in.) below the top edge of the housing base cover plate on housings intended for ground level mounting. Base cover plates shall have a minimum height of 31 cm (12 in.).

(xiv) Any housing, which weighs in excess of 91 kilograms (kg) (200 pounds (lb)), including its contents, shall be equipped with lifting brackets for attaching hoisting cables or chains.

(xv) Housing stakes shall be a minimum of 107 cm (42 in.) in length. If fabricated from steel, they shall have a minimum thickness of No. 13 gauge as measured according to American Society for Testing and Materials (ASTM) A 525–91b. Stakes shall be formed into a ''U'' channel with a minimum depth of 2 cm (0.75 in.). The stake shall be a single part of suitable design strength for driving 91 cm (36 in.) into the soil with hand tools without damage such as bending or warping. The stake shall have adequate mounting holes having a minimum separation of 15 cm (6 in.) for mounting the housing baseplate. The stake material must resist corrosion and deterioration when exposed to soil and atmospheric conditions.

(xvi) The housing design must permit a logical progression of installation steps that would normally be encountered in typical field installations.

(xvii) Provisions for attaching housings to stakes, poles, walls, other housings, or pads shall be provided for each design intended for those purposes. Locations of holes for mounting attachments may be provided by knockouts on above ground components. Mounting hole locations for below ground components may be predrilled.

(xviii) Pole mounting hardware shall provide at least 1.3 cm (0.5 in.) clearance from the pole to the housing. Pole mounting brackets shall accommodate the wide range of pole sizes used in the telephone industry.

(xix) Pad-mounted housings shall have hardware available for anchoring the housing base to the pad. A template may be provided to assist in the location of mounting attachment details for pad preparation.

(xx) Housings equipped with stub cables shall have strain relief devices to permit shipping and handling of the housing without damage to the housing or stub cables. Only RUS accepted cable shall be used for stub cables. The cable manufacturer's recommendations

concerning minimum bend radius shall be observed. The minimum bend radius for most copper cables is 10 times the cable diameter.

(xxi) Cable supports shall be provided near the top of the ground line cover and other appropriate locations within the housing to provide cable stability consistent with the intended use and capacity of the housing. Cable supports shall be capable of holding a minimum load of 23 kg (50 lb).

(xxii) An adequate supply of nonmetallic retainer clips or tie wraps capable of supporting a minimum load of 23 kg (50 lb) shall be provided with the housing. Adequate spaces for installation of the clips or tie wraps must be provided on the housing backplate and cable supports.

(xxiii) Housing chambers designed for splicing operations shall be equipped with insulated supporting straps or rods suitable for supporting splice bundles. The insulation on the straps or rods shall extend for the entire length of the device and shall have a dielectric strength of 15 kilovolts (kv) direct current (dc) minimum. Housings having an ''H'' frame design where both front and rear covers may be removed may incorporate insulated tie bars to be used as cable supports.

(xxiv) Housings designed to contain equipment in addition to splices shall be equipped with a device for physically separating the splice area from the service area of the housing.

(xxv) A dielectric shield rated at 15 kv dc shall be provided to enclose the cable splice area. The shield shall extend from the lower cable supports to within 2.5 cm (1 in.) of the top of the housing. The shield shall be equipped with Velcro or equivalent fastening devices designed to hold the shield in both the open or closed positions. The fastening devices shall extend along the entire vertical edge of the dielectric shield.

(xxvi) Mounting arrangements for a variety of terminal blocks and other equipment shall be provided by means of good housekeeping panels or other devices that may enhance the service aspect of the housing.

(xxvii) Housings designed for SAI cabinets may be shipped with terminal blocks installed and stub cables attached. If this option is exercised, the stub cables and terminal blocks must be RUS accepted. In all cases, SAI cabinets must be equipped with appropriate mounting devices for installing the peripheral equipment required for a serving area interface.

(xxviii) SAI cabinets shall be designed to provide physical separation between the splicing area and the area provided for running cross-connect jumpers.

(xxix) SAI cabinets and large splice housings must have an external feature for attaching a padlock to prevent unauthorized entry.

(xxx) Each housing shall have a tinned or zinc electroplated copper alloy or equivalent connector plate or bar to be used for terminating ground and cable shield bond connections. The device shall be equipped with captive studs and nuts with captive lock washers designed for attaching 6 American Wire Gauge (AWG) copper bonding harness wire or braid and a 6 AWG copper ground wire. Connector plates shall be equipped with enough studs and nuts to provide individual connections equivalent to the maximum number of cable sheaths recommended for the housing. Housings shall incorporate design features that enable the field installation of at least one additional connector plate for service conditions that require numerous connections. A bonding and grounding system capable of providing support and strain relief for service wires shall be provided for housings intended for use as distribution points. The bonding system shall be designed to provide sheath continuity as cable and service wires are installed, and prior to any other operation being performed. The bonding arrangement shall provide electrical continuity between all bonds and the ground connector plate. The bonding and grounding arrangement shall permit the lifting of individual cable ground connections for testing and cable locating activities without jeopardizing the grounding potential of other cables that may enter the housing. The bonding and grounding system shall be capable of conducting a current of 1000 amperes for at least 20 seconds.

(4) *Warning sign.* (i) A buried cable warning sign shall be securely attached to the outside of each housing. The lettering information on the sign shall be permanent.

(ii) For pedestals, the sign shall be centered horizontally on the front cover and the top of the sign shall be not more than 10 cm (4 in.) from the top of the housing.

(iii) For SAI cabinets, the sign shall be centered horizontally and vertically on the door. If there are two doors, the sign shall be mounted on the left door.

(iv) Deviations from warning sign location requirements are permitted only for housing design constraints. Alternate sign locations will be considered by RUS.

(v) The RUS standard sign design is shown in Figure 1.

(5) *Housing materials.* (i) Materials used in housings shall present no environmental or safety hazard as defined by industry standards or Federal, State, or local laws and regulations. Figure 1 is as follows:

FIGURE 1

WARNING SIGN

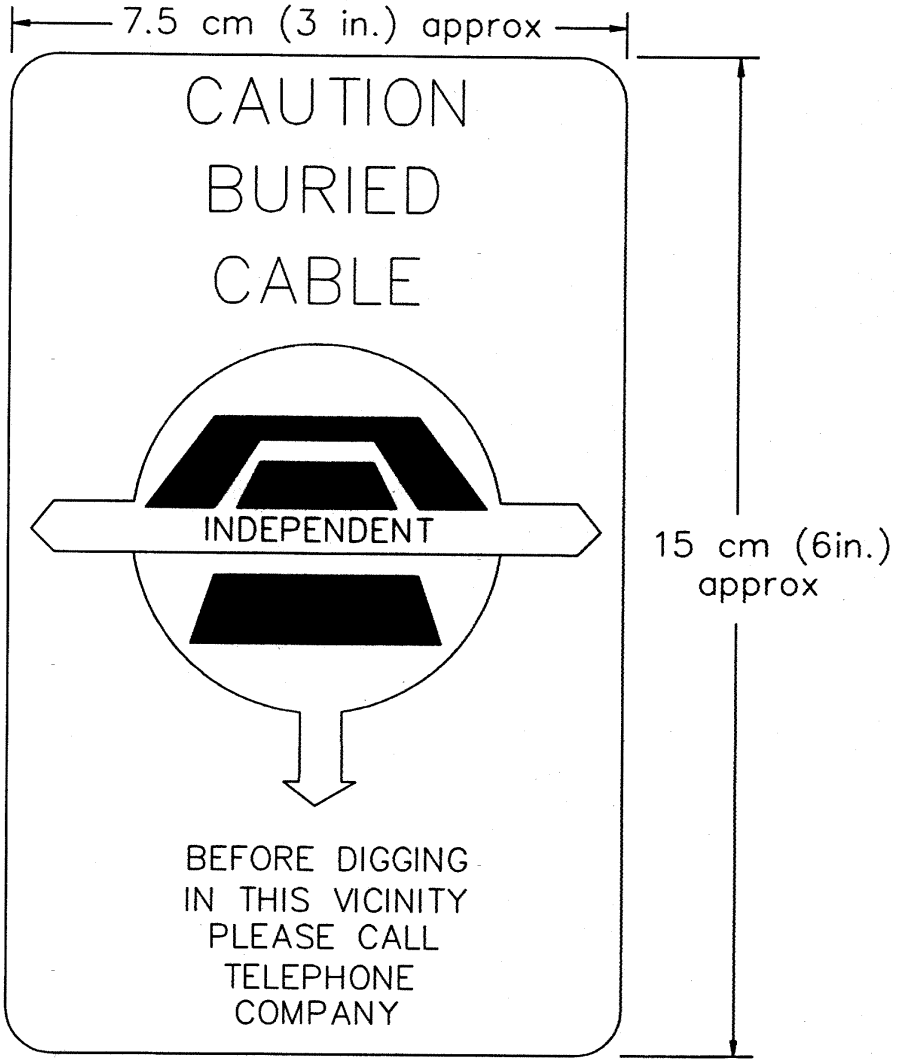

(ii) All materials are required to have fire resistance ratings consistent with recognized industry standards. External materials must be flame resistant.

(iii) All materials used in the manufacture of housings or component parts must achieve the required strength properties, resist deterioration when exposed to outdoor conditions, and be

acceptable to RUS for the specific application. New materials or materials not familiar to the RUS staff shall be supported by test and performance data which demonstrates their suitability for the intended use.

(iv) Nonmetallic housing materials shall have a fungus growth rating no greater than one according to ASTM G 21–90.

(v) Metallic components shall be either corrosion resistant or protected against corrosion and must not produce galvanic corrosion in wet or humid conditions on other metals that may be present in the housing environment.

(vi) Mill galvanized steel used in the manufacture of housings shall comply with the appropriate requirements of one of the following standards:

(A) ASTM A 109–91;

(B) ASTM A 366/A 366M–91;

(C) ASTM A 525–91b; or

(D) ASTM A 526/A 526M–90.

(vii) Hot rolled steel shall comply with the appropriate requirements of one of the following standards:

(A) ASTM A 569/A 569M–91a; or

(B) ASTM A 621/A 621M–92.

(viii) Cold rolled steel shall comply with the appropriate requirements of one of the following standards:

(A) ASTM A l09–91; or

(B) ASTM A 366/A 366M–91.

(ix) Steel parts used for internal housing brackets shall be hexavalent chromate coated or zinc plated in accordance with ASTM B 633–85.

(x) Hardware items used for assembling or fastening housing components shall be 300 series or passivated 400 series stainless steel or hot dip galvanized in accordance with ASTM A l53–82 (1987). Other materials will be considered by RUS on an individual basis.

(xi) Aluminum components shall be fabricated from alloy types 5052 or 6061 or other types that have been recognized as having acceptable corrosion resistance and formability and weldability features.

(xii) Nonmetallic parts must be resistant to solvents and stress cracking and shall be compatible with metals and other materials such as conductor insulations and filling compounds used in the manufacture of cable. Plastic materials must be noncorrosive to metals and resist deterioration when exposed to industrial chemical pollutants, ultra-violet rays, road salts, cleaning agents, insecticides, fertilizers, or other detrimental elements normally encountered in the outdoor environment.

(xiii) Housing door seals and gaskets may be manufactured from rubber or synthetic rubber-like elastomer materials. Seals and gaskets shall exhibit a high degree of weatherability with an effective life of at least 30 years in the outdoor environment. The material shall be tear resistant and have a low compression set.

(6) *Housing finish requirements.* (i) All interior and exterior surfaces of housings shall be free from blisters, wrinkles, cracks, scratches, dents, heat marks, and other defects.

(ii) There shall be inherent design provisions to prevent objectionable deterioration of the housing such as rusting, exposure of fiber or delamination. Secondary protection, such as galvanizing over steel per ASTM A 526/A 526M–90 or anodizing over aluminum, shall be provided to ensure reliability over the projected 30 year design life of the housing.

(iii) Painted metal housings shall have a minimum gloss of 60 (60° specular) in accordance with ASTM D 523–89.

(iv) All painted surfaces shall have a uniform color and texture in accordance with ASTM D 3928–89. Nonmetallic housings shall meet recognized industry standards concerning optical appearance for gloss and haze as applicable for the material.

(v) The colors of housings that RUS will consider for acceptance shall be as follows:

Color	Standard
Gray-Green	Munsell 6.5 GY 6.03/1.6
	Munsell 4.4 GY 6.74/1.5
Green	Munsell 8.8 G 2.65/5.3
Orange	Federal Standard 595A
	Color Number l2246
	Munsell 0.15YR 5.26/13.15
Chocolate	Munsell 5.27YR 2.40/2.60
	Color Number 835

(7) *Installation requirements.* (i) The design of the housing must provide for a logical and normal installation sequence, i.e., excavation, installation of

a foundation or base and anchoring devices, addition of hardware, installation and bonding of cables, splicing, addition of service, and final closing.

(ii) No special tools or equipment other than that usually carried by outside plant technicians and construction crews must be required for installation of the housing. Security devices are the exception to this requirement.

(iii) Installation hardware shall maintain housings in an erect and stable position when subjected to normal storm loads. Pad-mounted designs must accommodate precast or cast-in-place reinforced concrete or other suitable prefabricated material. Brackets, inserts for fastening, conduit openings, or other items necessary for a pad-mounted installation must be provided. The manufacturer shall provide detailed drawings or a template for locating inserts, conduit openings, or slots for cast-in-place pad construction.

(e) *Performance criteria and test procedures for housings*—(1) *General information.* (i) The housing manufacturer shall perform adequate inspections and tests to demonstrate that housings and housing components comply with RUS requirements.

(ii) Testing shall be performed at a room temperature of 24±3 °C (75±5 °C). Temperatures for testing performed at other than room temperature shall be determined as near the center of the product under test as practical.

(2) *Description of test housing.* (i) Each distinctly designed and configured family of housings intended to perform a particular function shall be tested.

(ii) The typical test sample shall consist of the exterior housing components such as covers, backplates, good housekeeping panels, cap assembly, anchor posts, decals, etc. Interior components must include the bonding and grounding hardware for cables and service wires and the dielectric shield. The housing may include terminal blocks or cross-connect modules, cable splices, or the typical outside plant equipment the housing is designed to contain and protect.

(3) *Environmental requirement for housings*—(i) *Thermal shock.* The test housing shall be placed in a test chamber and exposed to the temperature cycle of Figure 2 for five complete cycles. The step function nature of the temperature changes may be achieved by insertion and removal of the test housing from the chamber. The soak time at each temperature shall be four hours. The housing shall be removed from the test chamber at the conclusion of the five-cycle period. After the test housing temperature has stabilized to room temperature, the housing must be inspected for deterioration of materials and satisfactory operation of mechanical functions. Figure 2 is as follows:

FIGURE 2
THERMAL SHOCK TEMPERATURE CYCLE

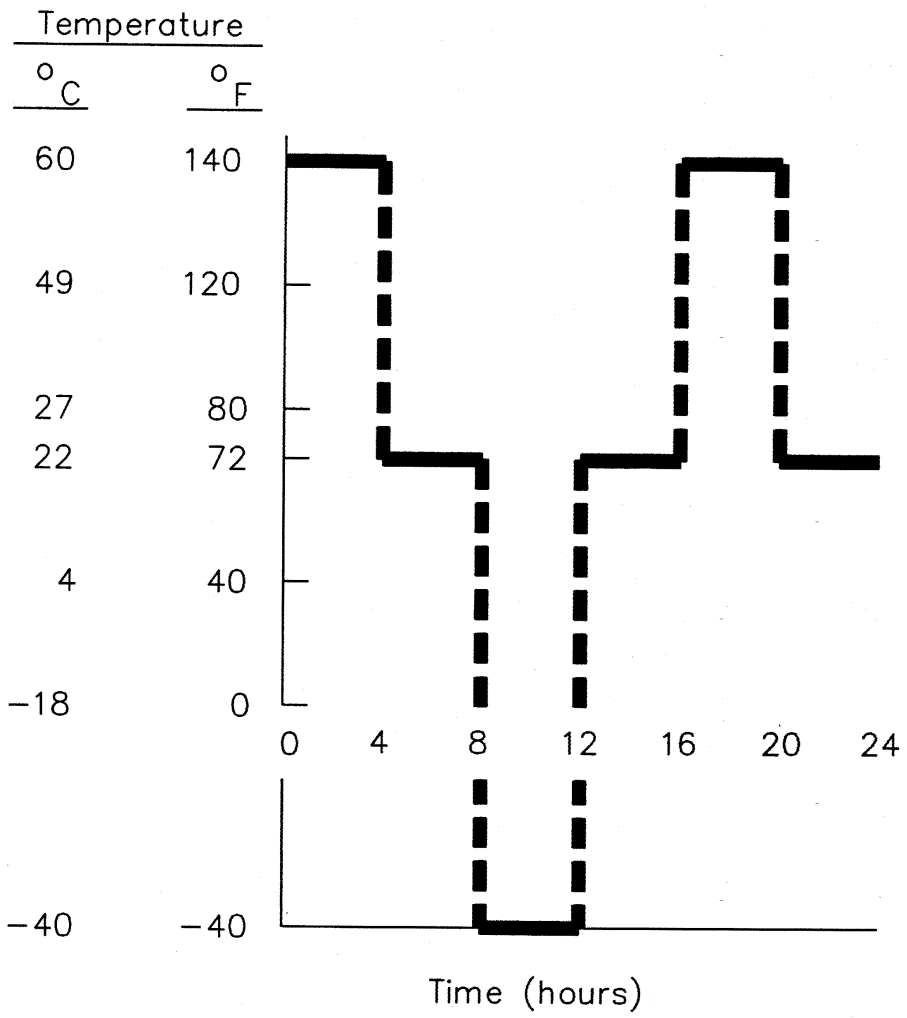

(ii) *Thermal shock and humidity.* The test housing shall be placed in an environmental test chamber at 95 ± 3 percent (%) relative humidity (RH) and temperature cycled per Figure 3 for a period of 30 days. At the end of the test there shall be no rust or corrosion of any closure components. Minor corrosion due to surface scratches, nicks, etc. is permitted. If the closure is made of a nonmetallic material, there shall be no signs of degradation. Figure 3 is as follows:

FIGURE 3

ENVIRONMENTAL TEST CHAMBER TEMPERATURE CYCLE

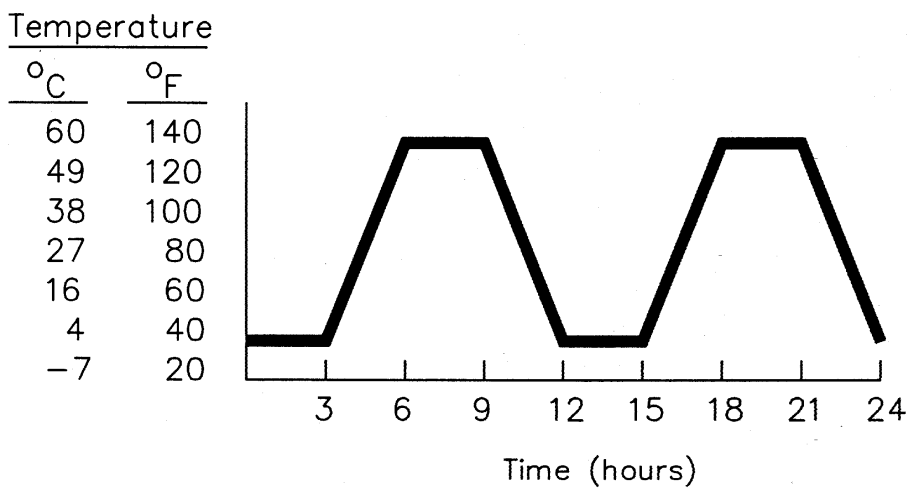

Note: Relative Humidity = 95% ± 3%

(iii) *Humidity and condensation.* Test panels shall be placed in an environmental chamber and subjected to 1,008 hours (42 cycles) of exposure per ASTM D 2247–92. One cycle consists of 24 hours of 100% humidity (with condensation on the panels) at a cabinet temperature of 38±1 °C (100±2 °F) and an ambient temperature of 25±1 °C (77±2 °F) without heat input. Upon completion of cycling, the test panels shall be subjected to an 11 newton-meter (N-m) (100 pound-inches (lb-in.)) impact test using the Gardner-Impact Tester or equivalent. Test panels shall show no substrate or coating cracking or loss of coating adhesion on either side.

(iv) *Weatherability.* Three test panels shall be tested for weatherability in accordance with the appropriate procedures of either ASTM D 822–89 or ASTM G 23–90. Total exposure time shall be a minimum of 800 hours. Failure is defined as fading, cracking, blistering, or delamination on any of the three test panels.

(v) *Low temperature durability.* Low temperature durability shall be proven by exposing the three test panels from (e)(3)(iv) of this section to at least 25 continuous cycles of the following test sequence:

(A) To insure complete saturation of the three test panels, soak them for 96 hours in a container of distilled water 22±2 °C (71.6±4 °F);

(B) Lower the temperature of the water and the immersed test panels to −28±2 °C (−18.4±4 °F) and stabilize for 24 hours;

(C) Thaw the water with the samples to 22±2 °C (71.6±4 °F) and stabilize for 24 hours;

(D) Repeat the procedure 24 times. Any cracking, crazing, deforming, or delaminating on any of the three test panels shall be considered a failure; and

(E) Remove the samples from the water and impact test the three panels by delivering a force of 11.3 N-m (100 lb-in.) using a Gardner-Impact Tester to each specimen at 71, 22, and −28±2 °C (159.8, 71.6, and −18.4±4 °F), after stabilizing them at those temperatures for at least two hours. Visual inspection shall reveal no deformation or perforations on any of the test panels.

(vi) *Corrosion resistance.* Corrosivity shall be tested in accordance with the requirements of ASTM B 117–90. Both scribed and unscribed panels shall be evaluated following the procedures of ASTM D 1654–92. Scribed panels shall have a rating of at least six, following 500 hours of exposure to salt fog, and the unscribed panels shall have a rating no lower than 10, after 1,000 hours exposure. Visual rust inspection shall confirm no more than 0.03% rusting (rust grade 9) of the surface area of the test sample when evaluated in accordance with ASTM D 610–85(1989). The unscribed samples shall be impacted with an 11.3 N-m (100 lb-in.) force, using a Gardner-Impact Tester or equivalent. Visual inspection of the impacted samples shall reveal no loss of adhesion between the base material and the coating or cracking at the finish on the test panels.

(vii) *Fungi resistance.* Fungi resistance of nonmetallic housing materials shall be tested according to the procedures of ASTM G 21–90. Any rating greater than one shall be considered a failure.

(viii) *Stress crack resistance.* The stress cracking characteristics of nonmetallic housing components shall be tested in accordance with ASTM D 1693–70 (Reapproved 1988). The tests shall be performed at 49±2½ C (120±4½ F) for 14 days and exposed to the following materials:

(A) Industry recognized filling compounds;

(B) Isopar M;

(C) Industry recognized solvents;

(D) Industry recognized encapsulants; and

(E) Commonly used insect, pest, and weed control products and agricultural fertilizers.

(ix) *Chemical resistance.* (A) Chemical resistance shall be determined by immersing representative nonmetallic material samples in each of the following solutions for 72 hours at 22±2 °C (71.6±4 °F):

(*1*) 3% sulfuric acid;

(*2*) 100 parts per million (ppm) trichloroethane in water;

(*3*) 0.2 N sodium hydroxide; and

(*4*) Unleaded high octane gasoline.

(B) There shall be no swelling, deformation, or softening of the material samples or any discoloration of the solution.

(x) *Ultraviolet resistance.* Test panels of metallic and nonmetallic outer housing materials shall be subjected to 700 hours exposure per ASTM D 2565–92 using the type BH apparatus. The panels shall not exhibit fading, blistering, checking, or delamination.

(xi) *Weathertightness.* The housing shall be mounted in its typical field installation position and sprayed with water. The temperature of the water shall be adjusted to be equal to or warmer than the temperature of the cabinet interior to avoid the possibility of condensation. A water spray head shall be used to direct water at the housing so that the water stream will strike the assembly at a downward angle of 45 degrees. The flow of the water shall be 3.8 liters per minute (one gallon per minute), with 276 kilopascals (40 pounds per square inch) head of pressure. The spray head shall be held 1.8 meters (m) (6 feet (ft)) from the test cabinet. The spray head shall be adjusted so that water impinges uniformly over the housing surface. The duration of the test shall be five minutes. All vertical cabinet surfaces shall be tested by this procedure. The exterior of the cabinet shall be thoroughly dried with towels (no heat drying) prior to examination of the housing interior. The interior of the housing shall be checked for presence of water. Wetting of over-lapping surfaces is permitted. There shall be no presence of water inside the housing.

(xii) *Wind Resistance.* (A)(*1*) Stub pole or wall mounted SAI and large pair

count splice housings shall be subjected to a load (F) as shown in Figure 4 and the following table to simulate the turning moment equivalent to a uniform wind load of 161 kilometers per hour (km/h) (100 miles per hour (mi/h)) perpendicular to the largest surface area.

Maximum area of largest surface square centimeters cm^2 (Square inches) (in.^{2})	Load	
	kg	(lb)
5,200 (800) or less	18	(40)
5,201 to 9,100 (801 to 1,400)	32	(70)
9,101 to 13,000 (1,401 to 2,000)	45	(100)
13,001 to 16,200 (2,001 to 2,500)	57	(125)

Note: The procedures for housings with larger surface area will be evaluated by RUS on a case-by-case basis.

(*2*) The housing shall remain in its original mounting position throughout the test and exhibit no mechanical deformation.

(*3*) Figure 4 is as follows:

FIGURE 4

TURNING MOMENT – POLE MOUNTED HOUSINGS

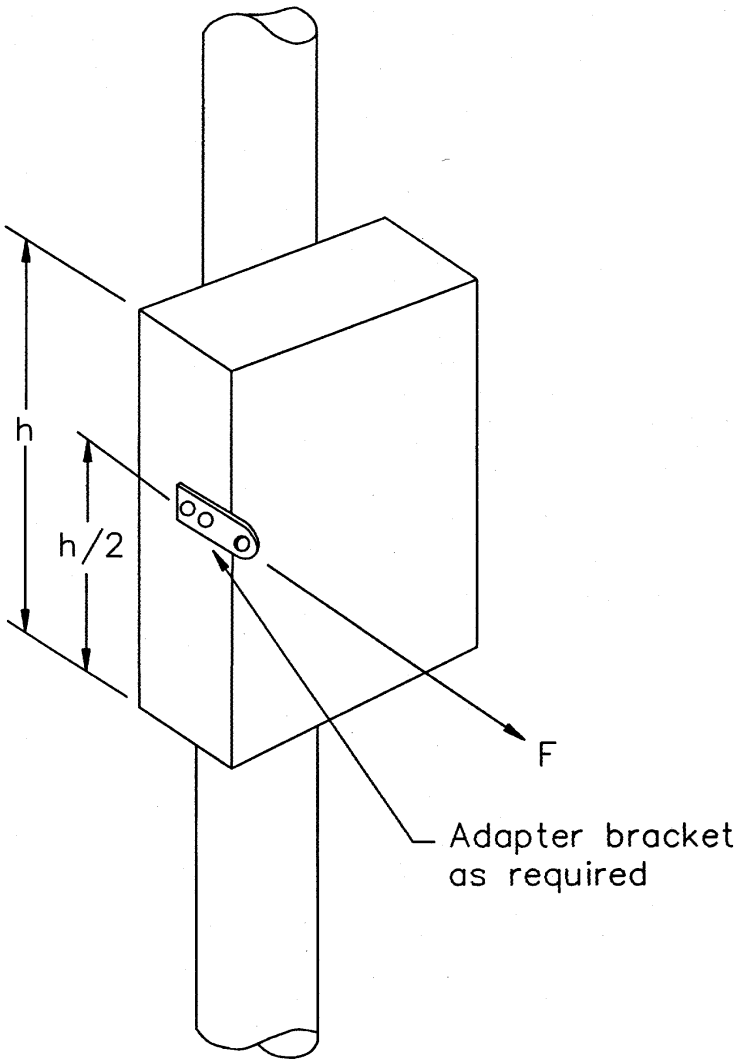

(B)(*1*) Pad or ground mounted SAI or splice housings shall be subjected to a load (F) as shown in Figure 5 and the following table to simulate the overturning moment equivalent to a uniform wind load of 161 km/h (100 mi/h) perpendicular to the largest surface area.

Height cm (in.)	Maximum area of largest surface cm² (in.²)	Load	
		kg	(lb)
122 (48) or less	11,000 (1,700) or less	91	(200)
	11,001–13,000 (1,701–2,000)	104	(230)
	13,001–14,900 (2,001–2,300)	118	(260)
123–152 (49–60)	11,700 (1,800) or less	91	(200)
	11,701–14,300 (1,801–2,200)	109	(240)
	14,301–16,200 (2,201–2,500)	127	(280)
	16,201–18,800 (2,501–2,900)	145	(320)
	18,801–20,800 (2,901–3,200)	163	(360)
	20,801–23,400 (3,201–3,600)	181	(400)
153–183 (61–72)	14,300 (2,200) or less	109	(240)
	14,301–16,900 (2,201–2,600)	127	(280)
	16,901–19,500 (2,601–3,000)	150	(330)
	19,501–22,700 (3,001–3,500)	172	(380)
	22,701–25,300 (3,501–3,900)	190	(420)
	25,301–27,900 (3,901–4,300)	213	(470)

Note: The procedures for housings with larger surface areas will be evaluated by RUS on a case-by-case basis

(*2*) The housing shall remain in its original mounting position throughout the test and exhibit no mechanical deformation.

(*3*) Figure 5 is as follows:

FIGURE 5

OVERTURNING MOMENT, PAD MOUNTED HOUSINGS

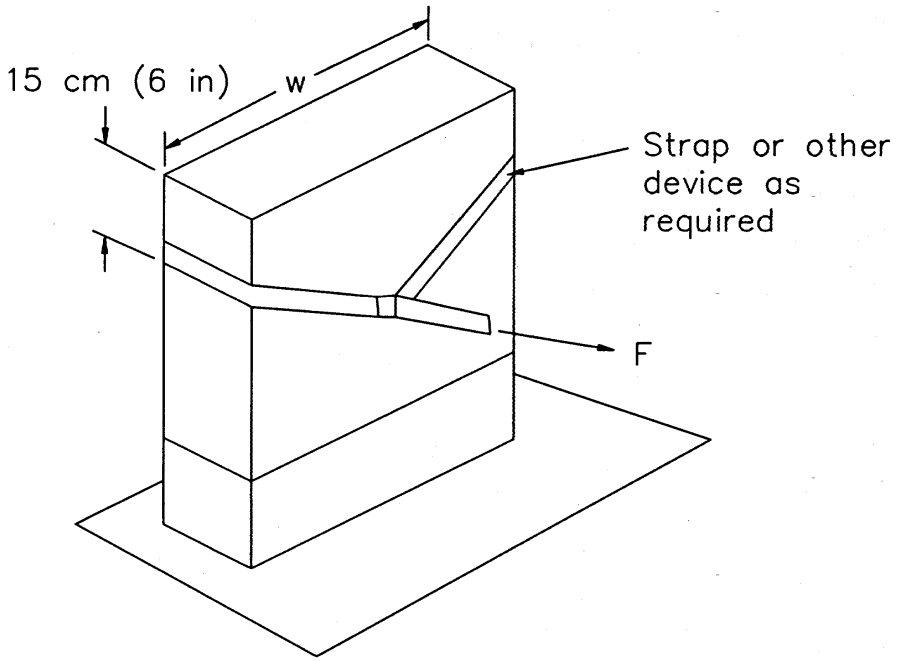

Notes:

1. The load "F" shall be applied perpendicular to the cabinet width where the width is greater than the depth.
2. If a foundation is used, the load "F" shall be applied toward the edge nearest to the cabinet.

(xiii) *Fire resistance.* (A) The test housing shall be installed in a manner typical of field installation. U.S. No. 1 wheat straw shall be placed on the ground around the housing base in an one meter (3 ft) radius at an approximate depth of 10 cm (4 in.). The straw shall be ignited and permitted to burn fully. After the housing has cooled, its contents shall be inspected for evidence of ignition, melting, burning, or structural damage. Damage sufficient to impair service constitutes failure.

(B) Polymeric materials shall be tested in accordance with the Underwriters Laboratories Publication (UL) 94, dated June 18, 1991. Materials used in housing components shall have a rating of 94V–0 or 94V–1 and shall not sustain combustion when an open flame source is removed.

(4) *Mechanical requirements for housings*—(i) *Impact resistance.* The test housing shall be subjected to the following impacts according to its minimum volume or minimum width and depth as shown in the following table:

Minimum volume cm^3 ($in.^3$)	Minimum width or depth cm (in.)	Impact force	
		N-m	(lb-ft)
Less than 35,000 (2,100).	Less than 13 (5)	68	(50)
35,000 (2,100) or greater.	13 (5) or greater	136	(100)

(A) The impact force shall be delivered to the front, back, and top surfaces. Circular housings shall be impacted on side surfaces 180° apart and on the top. The device used to deliver the force shall be spherical and approximately 25 to 31 cm (10 to 12 in.) in diameter. A typical test procedure may include the use of a hard rubber bowling ball, weighing 6 to 7 kg (13 to 16 lb), enclosed in a mesh bag, attached to a rope with a metal ring. The load shall be dropped vertically on the top surface and applied to the sides with a pendulum motion using the appropriate height and extension arm to achieve the required impact force. The housing must be impacted at the approximate mid-point of the surface area.

(B) Housings shall be conditioned for a minimum of eight hours at −40°C (−40°F) in an environmental chamber prior to testing. If the chamber is insufficient in size to conduct tests within the chamber, the housing may be removed and shall be tested within 10 minutes after removal.

(C) After impact testing, the housing shall not exhibit fractured or ruptured surfaces sufficient to allow the ingress of moisture or dust. The housing shall not exhibit mechanical damage that would impair the functioning of hinges, latches, locks, etc.

(ii) *Load deflection.* Free standing buried plant housings shall be tested for load deflection in accordance with Figure 6. The assembled housing shall be rigidly held in place by a mechanical means to simulate a normal field installation. A length of wire or cable, or other suitable material, shall be placed around the top section of the housing and deadended. The wire or cable shall be initially tensioned to 23 kg (50 lb). A measurement shall then be taken of the deflection of the housing at the top as shown in Figure 6. The deflection shall be recorded at incremental loads of 23 kg (50 lb) until destruction of the housing occurs. The average load for the three directions shall not be less than 136 kg (300 lb) and the minimum load in any direction shall be 113 kg (250 lb). Failure is defined as housing component fracture or crazing of the housing's surface finish. Figure 6 is as follows:

FIGURE 6

MEASURING LOAD DEFLECTION

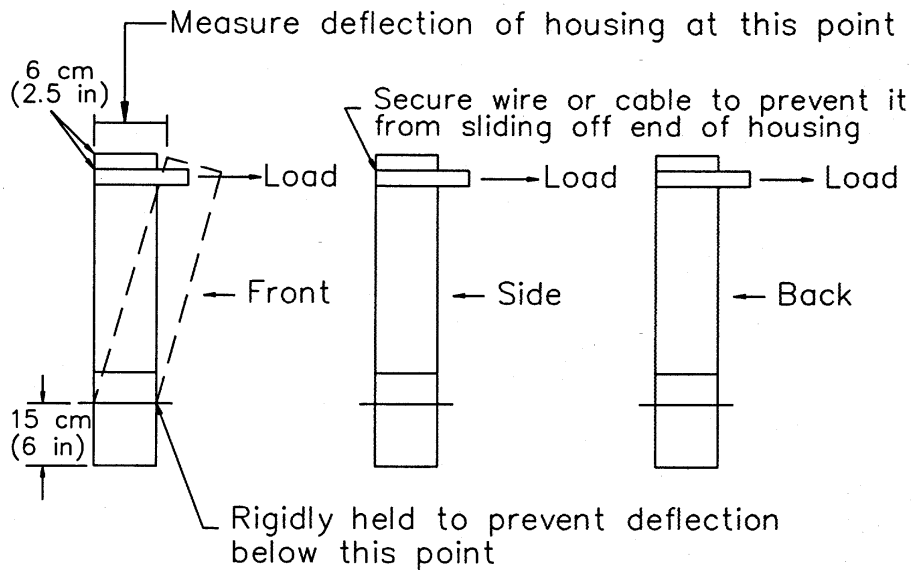

Notes:

1. One pedestal–mounted housing of each BD classification shall be tested to failure in each of the directions shown above.
2. A total of three pedestal–mounted housings of each BD classification shall be subjected to the required loads in each direction.
3. The average load for the three directions shall not be less than 136 kilograms (300 pounds). The minimum load shall be 113 kilograms (250 pounds).
4. Pole mounted housings shall be subjected to the same loading criteria.

(iii) *Vibration requirements.* The test housing and its contents shall be subjected to acceleration at a sine wave frequency sweep rate as shown in Figure 7 for a housing packaged for shipment and Figure 8 for an unpackaged housing. The frequency sweep may be performed continually or sequentially. The test shall be conducted once along each of three mutually perpendicular axes of the housing. There shall be no mechanical or electrical degradation of the housing or its contents. Noticeable damage to the housing constitutes failure. Figure 7 and Figure 8 are as follows:

FIGURE 7

VIBRATION TEST FOR PACKAGED HOUSINGS

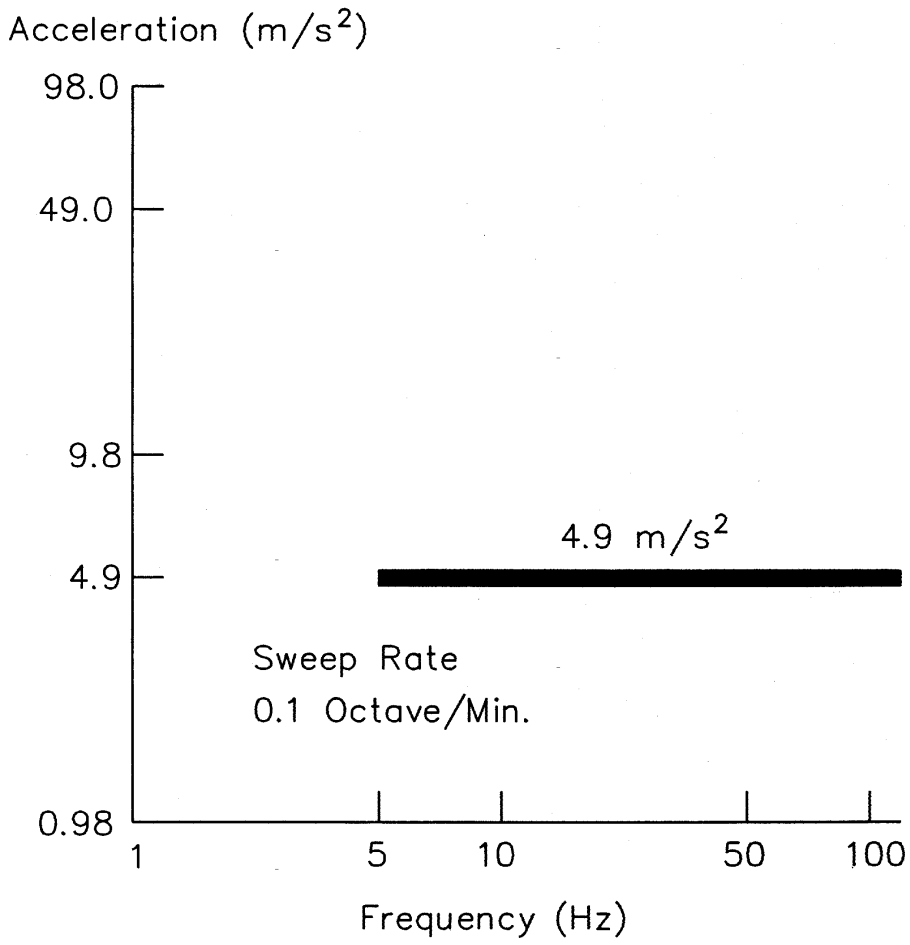

FIGURE 8

VIBRATION TEST FOR UNPACKAGED HOUSINGS

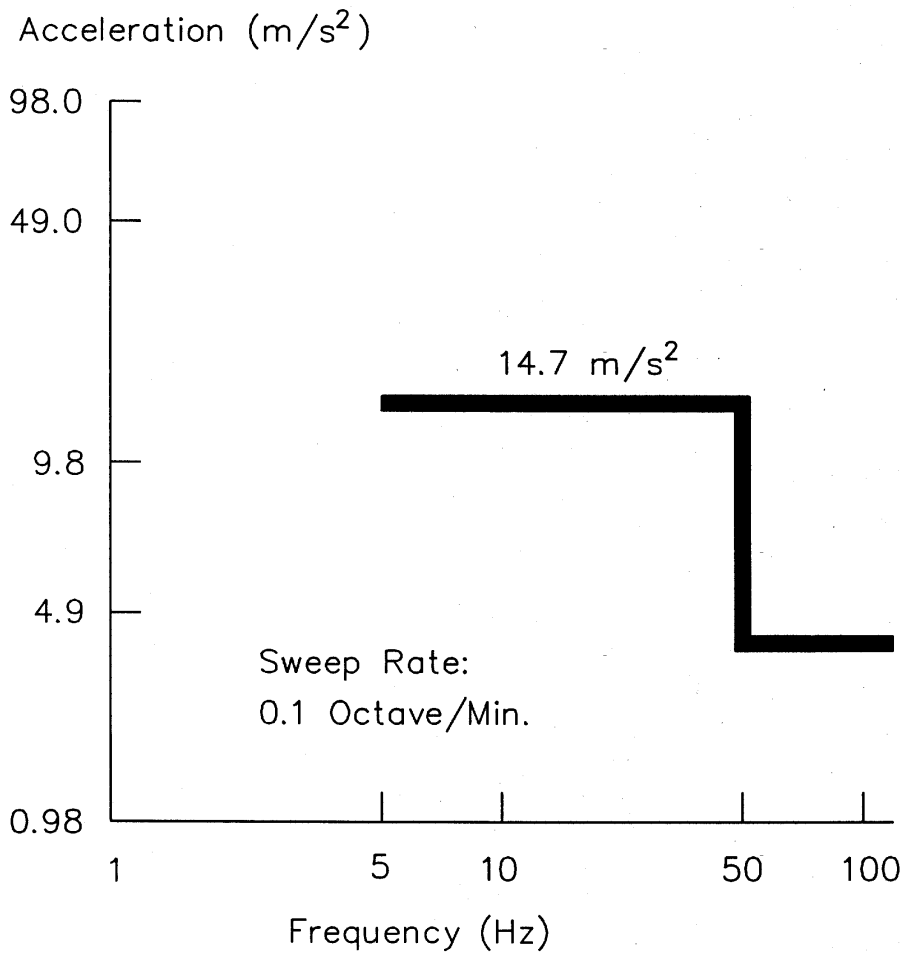

(iv) *Drop test requirements.* Housings shall be subjected to appropriate drop tests according to their weight. The drop tests shall be performed on housings and their contents as normally packaged as well as on unpackaged housings. The tests shall be conducted on a smooth level concrete floor or similar unyielding surface. For corner drops, the packaged housing and its contents shall be oriented at impact such that a straight line drawn through the struck corner and package geometric center is approximately perpendicular to the impact surface.

(A) Packaged housings and their contents weighing 91 kg (200 lb) or less

shall be capable of enduring a single drop on each face or corner without damage from a height specified as follows:

Packaged housing including contents weight kg (lb)	Drop height cm (in.)
0 to 9 (0 to 20)	76 (30)
10 to 23 (21 to 50)	61 (24)
24 to 45 (51 to 100)	53 (21)
46 to 91 (101 to 200)	46 (18)

(B) Packaged housings and their contents weighing more than 91 kg (200 lb) shall be capable of enduring a single drop on each of two diagonally opposite corners of the package without significant damage from a height specified as follows:

Packaged housing including contents weight kg (lb)	Drop height cm (in.)
92 to 453 (201 to 1000)	30 (12)
Over to 453 (1000)	15 (6)

(*1*) The packaged housing and contents shall be placed on its normal shipping base with one corner supported 15 cm (6 in.) above the floor and the other corner of the same end supported 30 cm (12 in.) above the floor as shown in Figure 9. The unsupported end of the package shall be raised so that the lowest corner reaches the height listed above and then allowed to fall freely. Figure 9 is as follows:

FIGURE 9

CORNER DROP TESTS FOR PACKAGED HOUSINGS WEIGHING MORE THAN 91 KILOGRAMS (200 POUNDS)

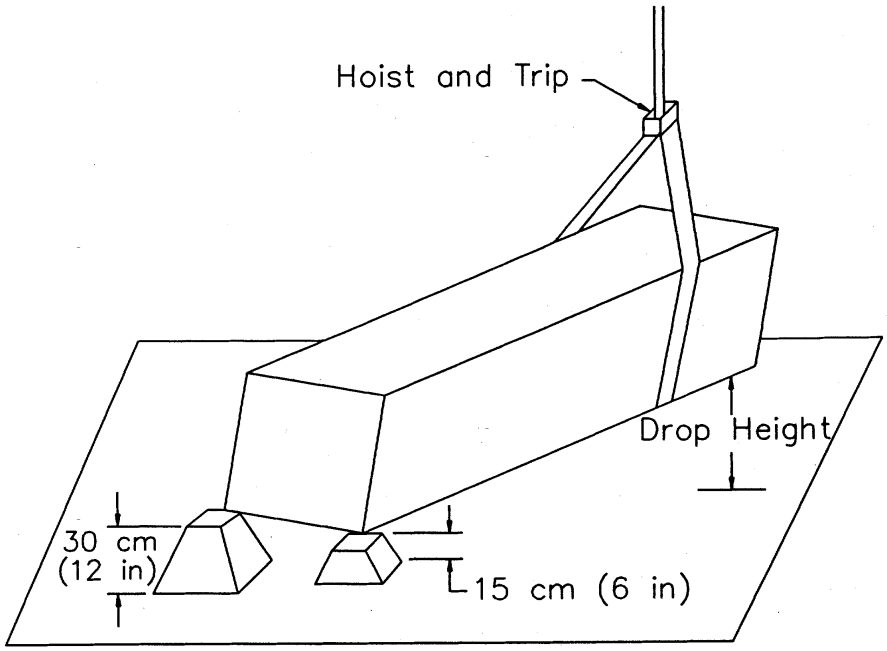

(*2*) The procedure of paragraph (e)(4)(iv)(B)(*1*) of this section shall be repeated for the diagonally opposite corner.

(*3*) The packaged housing and contents shall be capable of enduring a single drop on each edge of the base of its normal shipping position from the required height without damage and shall remain operational without function impairment. The packaged housing and contents shall be placed on its base with one edge supported on a sill 15 cm (6 in.) high and the unsupported edge raised to the required height as shown in Figure 10 and allowed to fall freely. Figure 10 is as follows:

FIGURE 10

EDGE DROP TEST FOR PACKAGED HOUSINGS WEIGHING MORE THAN 91 KILOGRAMS (200 POUNDS)

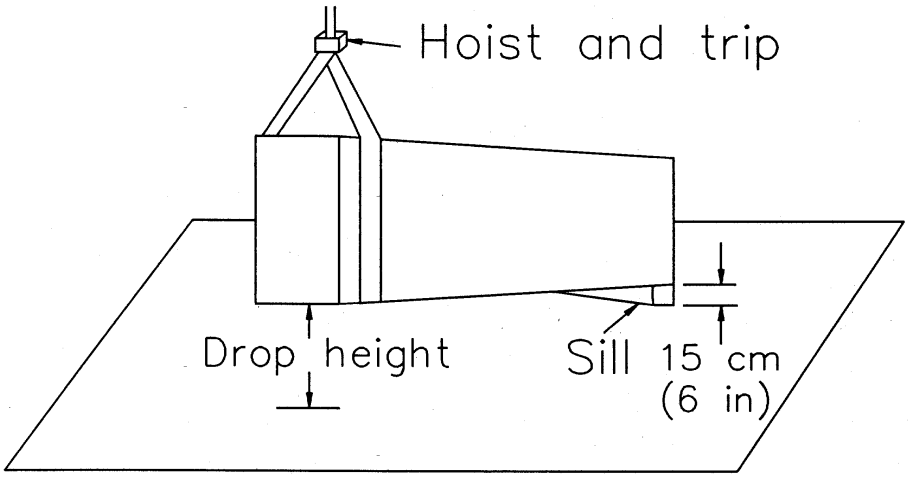

(*4*) The procedure of (e)(4)(iv)(B)(*3*) of this section shall be repeated for all edges of the base.

(C) Unpackaged housings and their contents weighing 23 kg (50 lb) or less shall be capable of enduring a single drop on each face and adjacent corners without significant damage from a height specified as follows:

Packaged housing including contents weight kg (lb)	Drop height cm (in.)
0 to 9 (0 to 20)	10 (4)
10 to 23 (21 to 50)	8 (3)

(D)(*1*) Unpackaged housings and their contents weighing more than 23 kg (50 lb) shall be capable of enduring a single drop without significant damage when lifted by its normal hoisting supports as shown in Figure 11 and with its lowest point at a height specified as follows:

Packaged housing including contents weight kg (lb)	Drop height cm (in.)
23 to 45 (51 to 100)	5 (2)

(*2*) Figure 11 is as follows:

FIGURE 11

DROP TEST FOR UNPACKAGED HOUSINGS WEIGHING MORE THAN 23 KILOGRAMS (50 POUNDS)

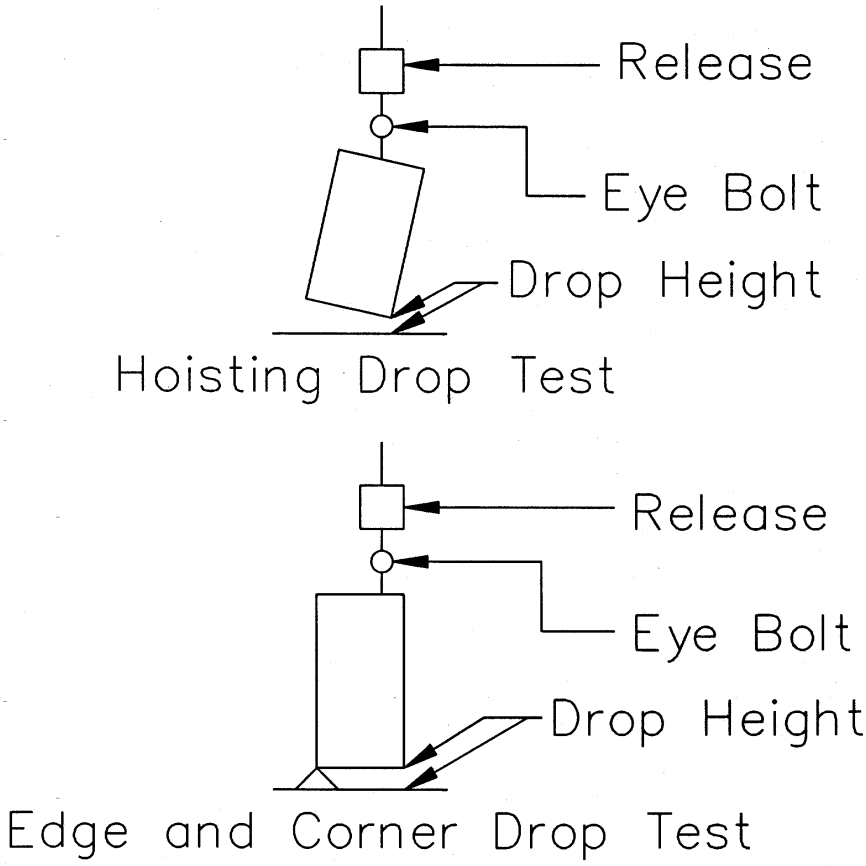

(v) *Firearms resistance.* All housings shall be tested for resistance to penetration by direct impact from a 12 gauge shotgun equipped with a modified choke and the use of a 3¾ dram equivalent powder charge and 35 grams #6 lead shot fired from a distance of 15 m (50 ft). The 12 gauge shotgun shall be fired from a normal standing position at the front side of the housing. Penetration through the housing wall by the lead shot shall constitute failure.

(vi) *Lifting hardware requirements.* The lifting hardware on housings and their contents that weigh more than 91 kg (200 lb) shall be tested. The housing shall be fastened to a restraining device such as a concrete slab and subjected to loading through the lifting attachments to simulate the lifting

load. For the first test a lifting line equipped with a dynamometer shall be attached to the housing lifting hardware and a load applied equal to three times the weight of a fully equipped housing. Deformation or damage to the housing or lifting hardware constitutes failure. A second test shall be conducted with the same arrangements as for the first except that a load shall be applied equal to six times the weight of a fully equipped housing. There shall be no catastrophic failure of the lifting hardware or housing.

(vii) *Stub cable strain relief tests.* Housings equipped with cable stubs and cable shipping retainer shall be tested by lifting a test housing, with the maximum length and weight of cable orderable, in a manner causing the full weight of the cable to be supported by the cabinet. Examination of the cable sheath after lifting shall reveal no tearing, rupturing, or other damage. The cable conductors and shield shall be tested for shorts and opens. Electrical defects to the stub cable or damage to the housing constitutes failure.

(viii) *Door restrainer evaluation.* (A) The housing shall be positioned with the door held in the open position by the door restraining device. A load, determined in accordance with the following table, shall be applied to the center of the door, perpendicular to the door and in each of the opening and closing directions.

Maximum area of door surface cm^2 (in.^{2})	Load kg (lb)
5,200 (800) or less	72 (160)
5,201 to 9,100 (801 to 1,400)	127 (280)
9,101 to 13,000 (1,401 to 2,000)	181 (400)

Note: Test procedures for housings with larger doors will be evaluated by RUS on a case-by-case basis.

(B) There shall be no functional failure of the restraining device nor mechanical damage to the housing.

(ix) *Security evaluation.* The security locking device shall be capable of withstanding a maximum torque of 2.8 N-m (25 lb-in.) without incurring physical damage to the closure, thereby resulting in a condition where the closure cannot be either accessed or locked.

(5) *Electrical requirements for housings.* Each bonding stud and nut location shall be evaluated by attaching one lead from a dc or alternating current (ac) power source to a bonding stud with the nut torqued as specified by its manufacturer and the other power source lead connected to the closure grounding conductor connector. The current path thus established must be capable of sustaining a current of 1,000 amperes root-mean-square for at least 20 seconds without fusing or causing any damage to the closure or its contents.

(6) *Finish requirements*—(i) *Impact resistance.* The finish on painted metal surfaces shall not exhibit radial cracking on the impact surface (intrusion) when indented at 18 N-m (160 lb-in.) with a 1.6 cm (0.6 in.) diameter spherical indentor. This test shall be performed in accordance with ASTM D 2794–92 with the exception that the test panel shall be of the same material, thickness, and finish as the pedestal housing being evaluated.

(ii) *Finish adhesion.* Painted finishes shall be tested for adhesion of finish in accordance with ASTM D 2197–86 (Reapproved 1991), Method A. There shall be no gouging in the top coat when tested with an 8 kg (17.7 lb) load. Gouging is defined as removal or separation of paint particles or breaking of the finish by the scraping loop to the extent of exposing base metal.

(iii) *Color evaluation.* The color of the housing finish should be compared against the Munsell system of color notation, as described in ASTM D 1535–89 to determine color consistency with that desired.

(iv) *Gloss evaluation.* The finish on painted housings shall be tested on two approximately 20 cm × 20 cm (8 in. × 8 in.) samples for each color used in accordance with the procedures of ASTM D 523–89. The finish shall have a minimum gloss of 60 (60° Specular).

(v) *Secondary finish evaluation.* Evidence of secondary protection shall be required for RUS acceptance. Typical secondary protection is galvanizing per ASTM A 526/A 526M–90 for steel surfaces.

(f) *Functional design criteria for binding post terminal blocks used in SAI cabinets*—(1) *General description.* A conventional binding post terminal consists of a metallic element or post, one end of which is configured for the permanent connection of 22, 24, or 26 AWG solid copper conductors and the opposite end

is configured for recurring connections and disconnections of solid copper cross-connect wire using a threaded screw or stud and nut combination for gripping the wire. The terminal is usually housed in a SAI cabinet. However, the terminal may receive limited use in smaller pedestal-type housings and pole mounted cabinets in the outside plant environment.

(2) *Design and fabrication requirements.* (i) Terminal blocks used in outside plant housings are expected to perform satisfactorily for a nominal design life of 30 years.

(ii) All individual terminals or terminal fields must be enclosed and the terminal enclosure must be totally filled with an encapsulating grease or gel which prevents connection degradation caused by moisture and corrosion. The encapsulant must provide complete encapsulation of terminal metallic connections and surfaces and totally fill all voids and cavities within individual terminal enclosures or terminal field enclosures to prevent ingress of moisture. The encapsulant must not restrict access to the terminal or restrict craft personnel from making connections. The encapsulant must be compatible with the standard materials used in cross-connect hardware and wiring.

(iii) Binding post terminals shall not be susceptible to damage under normal use of standard tools used by outside plant technicians such as screwdrivers and test set clips. In addition, use of other tools such as scissors, diagonal cutters and long nose pliers for tightening and loosening screws shall not result in damage to the terminal.

(iv) Terminals shall be designed so that a typical technician using customary tools shall be able to terminate cross-connect wire on a pair of terminals, or to remove it, without causing an electrical short between any two terminals or any other adjacent terminals.

(v) The terminal count sequence shall be indicated using numerals of at least 0.25 cm (0.10 in.) in height.

(vi) A means shall be provided to distinguish feeder terminals from distribution terminals.

(vii) A means shall be provided to identify tip terminals and ring terminals in a terminal field. The identification convention shall indicate tip on the left with ring on the right for horizontal spacing and tip on the top with ring on the bottom for vertical spacing.

(viii) The preferred height of the highest terminal in the connector field in a ground mounted SAI unit shall be 168 cm (66 in.) or less as measured from the top surface of the mounting pad. The bottom or lowest terminals in the connector field shall be at least 46 cm (18 in.) from the top surface of the pad.

(ix) Pole mounted aerial units shall be 84 cm (33 in.) or less in width. The maximum allowable height of the highest terminals in a pole mounted aerial unit is 168 cm (66 in.) as measured from the top surface of the standard balcony seat used with the interface. For computation purposes, 15 cm (6 in.) shall be allowed for the distance between the bottom of the interface and the top of the balcony seat.

(3) *Auxiliary features.* (i) SAI cabinets with terminal designs which do not permit direct attachment of common test instrument clips to terminal pairs without the occurrence of shorts shall be equipped with single pair auxiliary test contacts. The auxiliary test contacts shall attach to a terminal pair and provide a set of secondary terminals which will accept typical test instrument clips without the occurrence of shorts. Wire used to connect the auxiliary test contacts to the secondary terminals shall be 20 gauge minimum stranded conductor copper wire with a minimum dielectric strength between conductors of 15 kv. The test connector shall be functional on all terminal pairs.

(ii) A 25 or 50 pair test connector shall be available which can be used to make reliable electrical contact to terminals associated with discrete 25 pair binder groups. The multi-pair test connector shall be provided with a minimum of 1.8 m (6 ft) of suitable cabling terminated to a connector, for interfacing with test sets common to the industry. The multi-pair test connector shall be functional on all terminal groups.

(iii) A special service marker shall be available which must attach to a binding post terminal to identify special circuits and insulate exposed metal

parts from accidental shorts from tools and wires. A supply of 25 special service markers shall be provided with each SAI cabinet. The color of special service markers shall be red.

(iv)(A) A supply of twisted pair cross-connect wire shall be supplied with housings that are equipped with cross-connect terminals or that have provisions for mounting cross-connect terminals. The minimum length of cross-connect wire supplied is dependent on the SAI cabinet terminal capacity as follows:

Cabinet termination capacity (pairs)	Wire length
1 to 600	60 m (200 ft)
601 to 1200	120 m (400 ft)
Over 1200	180 m (600 ft)

(B) The cabinet shall be equipped to store the length of wire in a manner designed for convenient dispensing. The cross-connect wire supply shall be easily replaceable.

(g) *Performance criteria and test procedures for binding post terminal blocks used in SAI cabinets*—(1) *General.* Many of the tests described in this section require that the terminal block be installed in an appropriate housing in its typical field configuration.

(2) *Environmental requirements*—(i) *Insulation resistance/high humidity and salt fog exposure.* A test specimen shall consist of a standard ground or pole mounted housing equipped with a full complement of binding post terminals equipped with 25 special service markers. The minimum number of terminals to be tested shall be 100 pair (100 tips and 100 associated rings). The test terminals shall be selected to form a terminal array of approximate square dimensions. A 1 cm (36 in.) length of cross-connect wire shall be installed on each test terminal. All tips shall be joined together and all rings shall be joined together with a 48 volt dc potential applied as shown in Figure 12 during the high humidity/salt fog and simulated rain exposures. The 48 volt dc may be temporarily removed from the test samples during the measurement process and the ring terminal being measured shall be isolated from the remaining ring terminals. The terminal insulation resistance shall be measured at a potential of 100 volts dc using suitable instrumentation with a minimum measurement range of 10^4 to 10^{12} ohms. Figure 12 is as follows:

FIGURE 12

BINDING POST ARRANGEMENT FOR INSULATION RESISTANCE TESTING

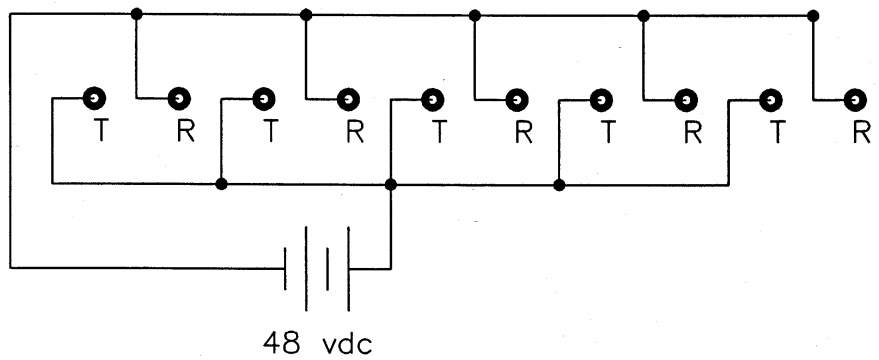

Note: 5 pair specimen arrangement shown is typical for entire (100 pair specimen minimum) test population.

(A) *High humidity.* The test housing shall be placed in an environmental test chamber at 95±3% RH and the temperature cycled as shown in Figure 3 in paragraph (e)(3)(ii) of this section for a period of 30 days. The cabinet doors shall remain in the fully open position. The insulation resistance between the ring terminal of each sample and all the common tip terminals shall be measured each 24 hours when the temperature is between 38 and 57 °C (100 and 135 °F) and increasing. The minimum insulation resistance when measured in accordance with paragraph (g)(2)(i) of this section shall not be less than 1 x 10^6 ohms.

(B) *Salt fog.* A test housing with its doors closed shall be placed in a salt fog 35 °C (95 °F) test chamber and exposed to a salt fog spray per ASTM B 117–90 for a period of 30 days. The insulation resistance should be measured every 24 hours as indicated in paragraph (g)(2)(i) of the section and shall not be less than 1 x 10^6 ohms. The special service markers shall exhibit no sign of fading, corrosion, swelling, warping, running color, or other signs of deterioration.

(ii) *Insulation resistance/simulated rain exposure.* (A) A test housing as described in paragraph (g)(2)(i) of this section shall be tested for water infiltration. The test shall be conducted using the method described in paragraph (e)(3)(xi) of this section. The cabinet doors shall remain closed for the duration of the test. The insulation resistance between the ring terminals and the common tip terminals shall be measured during and immediately following the spray application as indicated in paragraph (g)(2)(i) of this section and shall not be less than 1 x 10^6 ohms.

(B) With the cabinet doors open, a spray of tap water at a rate of 3.8 liters per minute (1 gallon per minute) at 276 kilo-pascals (40 pounds per square inch)

shall be directed on the terminal array for a period of 1 minute saturating all of the terminals. Following the spray application the doors shall be closed. The cabinet shall be maintained in a temperature environment of 26 to 28 °C (78 to 82 °F) at 95±3% RH for 6 hours. The insulation resistance shall then be measured as specified in paragraph (g)(2)(i) of this section. The minimum insulation resistance shall not be less than 1 x 10^6 ohms.

(iii) *Contact resistance.* A minimum of 100 terminals equipped with cross-connect wire that has been installed in a manner typical of that used in the industry shall be temperature cycled.

(A) The test shall consist of eight-hour temperature cycles with one-hour dwells at extreme temperatures of −40 °C to +60 °C (−40 °F to +140 °F), and temperature changes at an average rate of 16 °C (60 °F) per hour between the extremes. The relative humidity shall be maintained at 95±3%. The eight-hour test shall be conducted for 512 cycles. Millivolt drop measurements shall be made initially and after 2, 8, 16, 32, 64, 256, and 512 cycles with the samples at room temperature. The resistance measurement technique must conform to ASTM B 539–90. The measurement method must have an accuracy of at least ±30 microohms for resistances less than 50 milliohms. The change in contact resistance shall not exceed 2 milliohms.

(B) A minimum of 100 terminals equipped with cross-connect wire installed in a manner typical of the industry shall be maintained at 118 °C (245 °F) during the test period, except during disturbance measurement periods where each wire connection to the terminals shall have a 0.23 kg (0.5 lb) force momentarily applied in a manner to stress the connection. Initial millivolt measurements shall be made without disturbing the joints in accordance with paragraph (g)(2)(iii)(A) of this section with the samples at room temperature. After initial measurement each sample shall be disturbed followed by a millivolt drop measurement after 1, 2, 4, 8, 16, and 33 days. The change in contact resistance should be less than 2 milliohms when compared to the initial measurement.

(iv) *Fire resistance.* A fully equipped cabinet including a full complement of cross-connect jumpers shall be installed in the standard field arrangement and tested for fire resistance in accordance with paragraphs (e)(3)(xiii) introductory text through (e)(3)(xiii)(B) of this section. After cooling, the cabinet, terminals, and associated wiring shall be inspected for signs of ignition, melting, burning, or structural damage of sufficient consequences such that the results are service affecting.

(v) *Encapsulant material compatibility.* The terminal connection encapsulant compound must be compatible with the standard materials used in cross-connect hardware and wiring when aged in accordance with ASTM D 4568–86 at a temperature of 80±1 °C (176± 2 °F). The conductor insulation shall retain a minimum of 85% of its unaged tensile strength and elongation values. The cross-connect hardware shall exhibit no visible material degradation.

(vi) *Encapsulant flow test.* Terminal connection encapsulant must remain stable at 80±1 °C (176±2 °F) when tested in an environmental chamber. Test specimens shall be suspended in a preheated oven over a glass dish or other drip-catching medium for a period of 24 hours. At the end of the test period, the glass dish shall be examined for evidence of flowing or dripping of encapsulant from the cross-connect terminal. More than 0.5 gram of encapsulant in the dish at the end of the test constitutes failure.

(3) *Mechanical requirements*—(i) *Vibration.* A test housing equipped with a full complement of cross-connect terminals and jumper wiring shall be subjected to vibration testing in accordance with paragraph (e)(4)(iii) of this section.

(ii) *Torsional capacity of binding posts.* The test specimens shall consist of the complete binding post terminal consisting of the screw or nut, washers if required, and threaded post or stud respectively.

(A) Test specimens shall include the terminals along the matrix edge at mid-span locations as well as centrally located terminals. Tests shall be conducted using a torque indicating screwdriver, or wrench, with an accuracy of

±0.17 N-m (±1.5 lb-in.) or better. The torque indicating device shall be used to tighten a screw or nut until failure of the screw or nut is achieved. Tests shall be conducted while the test specimen is stabilized at temperatures of −40 °C, 20 °C, and 71 °C (−40 °F, +68 °F, and at +160 °F). Record the torques at terminal failure. At least 10 test specimens shall be tested at each temperature. The failure torque shall not be less than 2.8 N-m (25.0 lb-in.) for each temperature.

(B) The post or stud of the binding post terminal shall not fail before the screw or nut when increasing torque. The faceplate or receptacle restraining the post or stud shall not fail before the screw or nut when increasing torque.

(iii) *Lateral loading capacity of binding posts.* A minimum of three sets of 25 terminals shall be tested with the test specimens stabilized at temperatures of −40 °C, 20 °C and 71 °C (−40 °F, +68 °F, and 100 °F). The test arrangement shall include the terminals along the matrix edge at mid-span locations as well as centrally located terminals. A force measuring device, such as a dynamometer, shall be attached to the end of a binding post terminal and a 16 kg (35 lb) force applied orthogonally to the terminal axis in 4 perpendicular directions as shown in Figure 13. Permanent deformation in excess of 0.08 cm (0.03 in.) or any structural damage in either the terminal or faceplate constitutes a failure. Figure 13 is as follows:

FIGURE 13

LATERAL LOADING OF BINDING POST TERMINALS

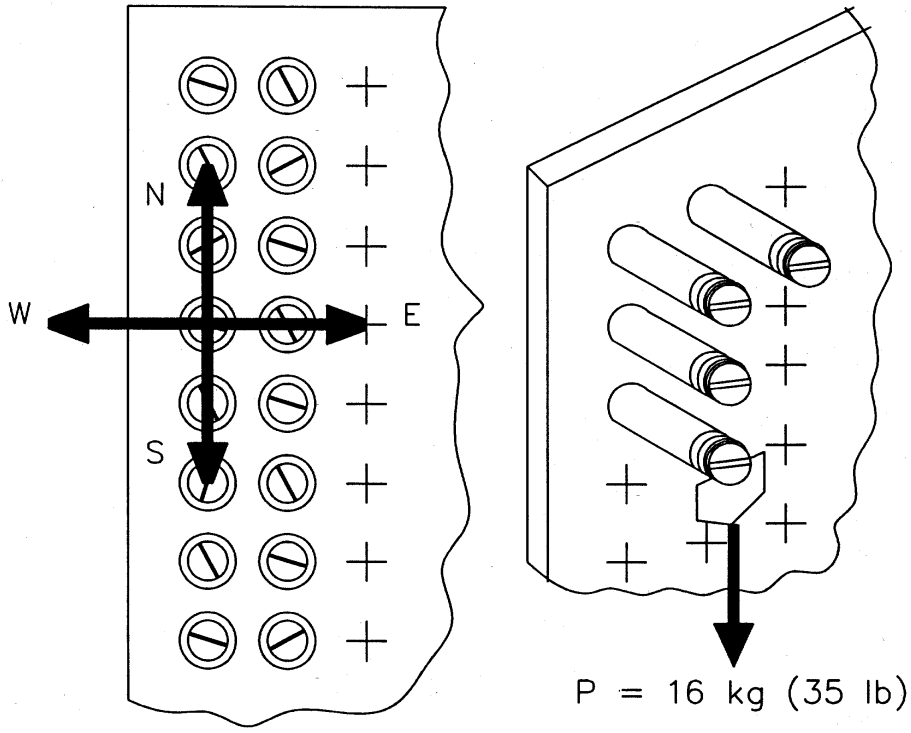

Note: Apply load P in N, E, S, and W directions

(iv) *Axial pullout resistance.* A minimum of three sets of 25 terminals shall be tested with the test specimens stabilized at temperatures of −40 °C, 20 °C, and 71 °C (−40 °F, +68 °F, and 100 ° F). The test arrangement shall include the terminals along the matrix edge at mid-span locations as well as centrally located terminals. A force measuring device, such as a dynamometer, shall be attached to a terminal and a force of 16 kg (35 lb) applied on axis as shown in Figure 14. There shall be no permanent deformation in excess of 0.08 cm (0.03 in.), any structural damage, or terminal pull-out in either the terminal or the faceplate. Figure 14 is as follows:

FIGURE 14

AXIAL PULLOUT OF BINDING POST TERMINALS

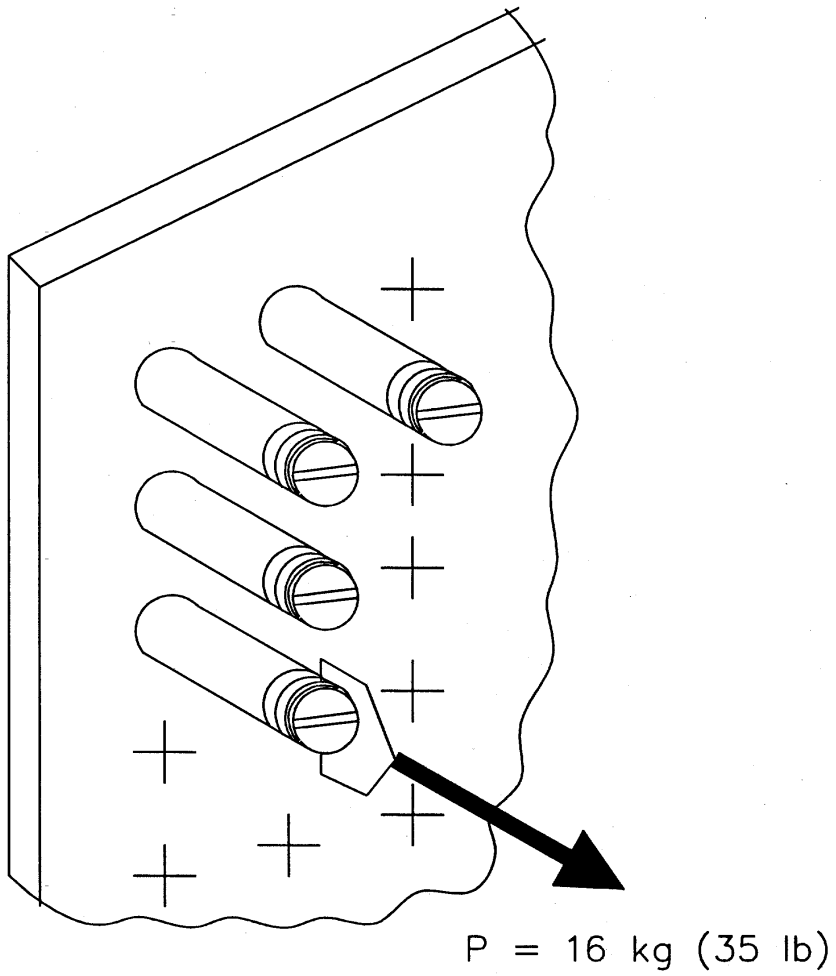

(v) *Test connector reliability*. (A) A single pair connector shall be capable of making a minimum of 100 successive connections to binding post terminals without the occurrence of an open circuit. The test shall include terminals along the matrix edge, center, top, and bottom.

(B) A multi-pair test connector shall be attached to the binding post terminal field and tests for opens between the binding post terminals and the test

connector shall be conducted. All circuits must prove good. The test shall be repeated along the terminal matrix edges, center, top, and bottom.

(vi) *Service cycle reliability*. A torque indicating device or wrench with an accuracy of ±0.17 N-m (±1.5 lb-in.) or better shall be used to tighten the terminal screw or nut as appropriate to 1.7 N-m (15.0 lb-in.). The terminal nut or screw is then loosened and retightened to 1.7 N-m (15 lb-in.). After 50 repeated connections and disconnections, the terminal shall be placed in an environmental chamber at 95% RH where the temperature shall be cycled as indicated in Figure 3 in paragraph (e)(3)(ii) of this section for a duration of 72 hours. The terminal shall then be momentarily removed from the chamber and the test procedure repeated. After a total of 250 loosening and retightening cycles have accumulated, the terminal must be capable of withstanding a torque of 1.7 N-m (15 lb-in.).

(4) *Dielectric strength*. All housing components in the vicinity of unsheathed field cable conductors, unsheathed housing stub cable or harness conductors, terminals, or cross-connect wire paths shall have a minimum dielectric strength of 500 volts ac to the cabinet grounding and bonding bracket. Dielectric strength is tested by connecting one lead from a 500-volt ac at 0.5 ampere source to the cabinet ground connector and the other lead is passed along the surfaces of all cabinet components in the vicinity of unsheathed cable or harness conductors, cross-connect wire paths, and in the splice area where unsheathed field cable conductors may be located. Sparkover constitutes failure.

(5) *Operational requirements*—(i) *Durability*. In order to verify the durability requirements while minimizing the number of test housings required to complete the test program, the binding posts selected for tests shall be separately identified and then checked to establish compliance after the various tests have been conducted.

(ii) Twenty-five jumper connections shall be made on each of two binding post connectors chosen at random from a representative sample in an assembled interface unit. After exposure to this test, these and adjacent connectors shall be inspected for damage such as cracks or chips in metal or plastic parts. Failure consists of structural damage, open circuits through the connector, or inability to pass the torsional, lateral loading, or axial pullout tests described in paragraphs (g)(3)(ii) through (g)(3)(iv) of this section.

(iii) Select six binding posts at random in a representative interface. On each connector, attach any test cord included with the unit and then remove the test cord as follows. On binding post sample 1, remove the cord normally ten times. On binding post sample 2, remove the cord ten times by jerking the test leads straight out. In these and the remaining tests, do this without releasing any manual attachment mechanisms. On sample 3, remove ten times by jerking downward at 45° from horizontal; sample 4, upward at 45° ten times; sample 5, left 45° ten times; sample 6, right 45° ten times. Check for opens and damage in the test cord, clips, and connectors. Failure consists of structural damage, open circuits through the connector, or inability of the terminal blocks to pass the torsional, lateral loading, axial pullout, test connector reliability, or dielectric strength tests described in paragraphs (g)(3)(ii) through (g)(3)(v)(B), and paragraph (g)(4) of this section.

(iv) Use craft tools such as scissors, diagonal cutters, and long nose pliers to loosen and tighten screws where the binding post design does not prohibit the possibility. Failure consists of severe structural damage.

(h) *Functional design criteria for insulation displacement type cross-connect modules used in SAI cabinets*—(1) *General* description. Cross-connect modules normally consist of multiple metallic contact elements that are retained by nonmetallic fixtures. The contact elements are spliced with permanent wire leads compatible for splicing to 22, 24, or 26 gauge cable on one side and configured for the acceptance of recurring connections and disconnections of plastic insulated cross-connect wire on the other side. Cross-connect modules are usually housed in a SAI cabinet. However, modules may receive limited usage in smaller pedestal-type

housings and cabinets in the outside plant environment.

(2) *Design and fabrication requirements.* (i) All individual terminals or terminal fields must be enclosed and the terminal enclosures must be totally filled with an encapsulating grease or gel which prevents connection degradation caused by moisture and corrosion. The encapsulant must provide complete encapsulation of terminal metallic connections and surfaces and totally fill all voids and cavities within individual terminal enclosures or terminal field enclosures to prevent ingress of moisture. The encapsulant must not restrict access to the terminal or restrict craft personnel from making connections. The encapsulant must be compatible with the standard materials used in cross-connect hardware and wiring.

(ii) The cross-connect module manufacturer shall make available any nonstandard tools and test apparatus which are required for splicing, placing of jumpers, and the performance of maintenance operations.

(iii) The module shall be designed so that a typical outside plant technician using tools shall be able to terminate cross-connect wire on terminals, or to remove them without causing electrical shorts between any other terminals.

(iv) The pair count sequence terminated on a module shall be easily visible and shall have numerals of at least 0.25 cm (0.10 in.) in height.

(v) Feeder terminations shall be easily distinguished from distribution terminations.

(vi) Tip and ring terminations shall be easily visible and shall be identifiable as described in paragraph (f)(2)(vi) of this section.

(vii) The preferred locations for cross-connect modules to be mounted inside a housing is the same as those for terminals and are described in paragraphs (f)(2)(vii) and (f)(2)(viii) of this section.

(3) *Auxiliary features.* (i) Housings equipped with cross-connect modules shall be equipped with auxiliary test contacts as described in paragraphs (f)(3)(i) and (f)(3)(ii) of this section.

(ii) Special service markers shall be available for cross-connect modules as described in paragraph (f)(3)(iii) of this section.

(iii) Housings equipped with, or designed for, cross-connect modules shall contain a supply of cross-connect wire as described in paragraph (f)(3)(iv) of this section.

(i) *Performance criteria and test procedures for insulation displacement type cross-connect modules*—(1) *General.* Many of the tests described in this section require that the cross-connect module be installed in an appropriate housing in its typical field configuration for testing. Resistance measurements should be made with an electrical device which measures changes in resistance for each test parameter measured. The tests specified provide an indication of the stability of the electrical connections under the test conditions encountered.

(2) *Environmental requirements.* (i) A fully equipped arrangement of cross-connect modules having approximately 25 special service markers shall successfully complete environmental testing in accordance with paragraphs (e)(3) introductory text through (e)(3)(xiii)(B) of this section.

(ii) *Insulation resistance/high humidity and salt fog exposure.* Insulation resistance measurements shall not be less than 1 x 10^6 ohms when cross-connect modules are tested by a procedure similar to that described in paragraphs (g)(2)(i) introductory text through (g)(2)(i)(B) of this section.

(iii) *Insulation resistance/simulated rain exposure.* Insulation resistance measurements shall not be less than 1 x 10^6 ohms when cross-connect modules are tested by a procedure similar to that described in and paragraphs (g)(2)(ii) introductory text through (g)(2)(ii)(B) of this section.

(iv) *Contact resistance.* The change in contact resistance should not exceed 2 milliohms when cross-connect modules are tested by a procedure similar to that described in paragraphs (g)(2)(iii) introductory text through (g)(2)(iii)(B) of this section.

(v) *Fire resistance.* A housing fully equipped with cross-connect modules and jumper wiring shall be tested for fire resistance by a procedure similar to that described in paragraph (g)(2)(iv) of this section.

(vi) *Encapsulant material compatibility*. Cross-connect wire insulation and cross-connect hardware shall exhibit no visible material degradation when tested by the procedure described in paragraph (g)(2)(v) of this section.

(vii) *Encapsulant flow test*. The cross-connect contact encapsulant shall drip no more than 0.5 gram when tested by the procedure described in paragraph (g)(2)(vi) of this section.

(3) *Mechanical requirements*—(i) *Vibration*. A housing fully equipped with cross-connect modules shall be vibration tested in accordance with paragraph (g)(3)(i) of this section.

(ii) *Test connector reliability*. The test connectors supplied with housings intended for cross-connect modules shall successfully complete 100 successive connections as described in paragraphs (g)(3)(v) introductory text through (g)(3)(v)(B) of this section.

(iii) *Service cycle reliability*. A combination of multiple insertions of jumper wires, vibration, and temperature cycling shall be performed on cross-connect modules. The multiple insertions on approximately 100 connections shall be accomplished by 300 operations consisting of insertion, removal and reinsertion of new jumper wire. Contact resistance shall be measured and the final insertion of jumper wire shall not be removed from the connectors but must be subjected to vibration testing in accordance with paragraph (g)(3)(i) of this section and temperature cycled as indicated in Figure 3 in paragraph (e)(3)(ii) of this section for a duration of 72 hours. After vibration and temperature cycling, the average change in contact resistance shall be no greater than 2 milliohms.

(iv) *Jumper wire pull-out resistance*. Test modules that have received no prior conditioning shall be equipped with 100 38 cm (15 in.) jumper connections of the gauges recommended for use with the module using the insertion tool recommended by the cross-connect module manufacturer. With the test samples suitably supported, wires from each sample shall be pulled, one at a time, by a tensile machine at a cross-head speed of 6 centimeters per minute (cm/min) (2.4 inches per minute (in./min)). Wires shall be pulled both perpendicular and parallel to the plane of the cross-connect field and shall withstand a load of at least 1.1 kg (2.5 lb) before pulling out.

(v) *Cable conductor pull-out resistance*. Test modules that have received no prior conditioning shall be equipped with 100 26, 24, and 22 AWG 38 cm (15 in.) cable conductors using the insertion tool recommended by the cross-connect module manufacturer. With the test samples suitably supported, conductors from each sample shall be pulled, one at a time, by a tensile machine at a cross-head speed of 6 cm/min (2.4 in./min). Wires shall be pulled both perpendicular and parallel to the plane of the face of the splice module and shall withstand a load of at least 1.1 kg (2.5 lb) before pulling out.

(4) *Electrical requirements*—(i) *Dielectric strength*. A housing fully equipped with cross-connect modules shall be tested for dielectric strength in accordance with (g)(4) of this section.

(ii) The dielectric strength of a contact within the cross-connect module to contacts on either side shall be tested. The module shall be tested in a dry environment with an ac power source capable of supplying 8 kv at a rate of increase of 500 volts per second, a circuit breaker to open at breakdown, and a voltmeter to record the breakdown potential. Cross-connect modules shall be prepared in accordance with industry accepted splicing techniques with leads trimmed to approximately 38 cm (15 in.). The dielectric strength of each contact to the contacts on either side shall have an average dielectric strength of approximately 5.0 kv.

(5) *Operational requirements*—(i) *Durability*. In order to verify the durability requirements while minimizing the number of test housings required to complete the test program, the contacts selected for tests shall be separately identified and then checked to establish compliance after the various tests have been conducted.

(ii) Twenty-five jumper connections shall be made on each of two contacts chosen at random from a representative sample in an assembled interface unit. After this test, these and surrounding contacts shall be inspected for damage such as cracks or chips in metal or plastic parts. Failure consists of structural damage, open circuits

through the connector, or inability to pass the jumper wire pullout tests described in paragraph (i)(3)(iv) of this section.

(iii) Select six contacts at random in a representative interface. On each of these contacts attach any test cord included with the unit as specified under normal use of that cord and then remove the test cord as follows. On sample 1, remove the cord normally ten times. On sample 2, remove the clip ten times by jerking the test leads straight out. In these and the remaining tests, do this without releasing any manual attachment mechanisms. On sample 3, remove ten times by jerking downward at 45° from horizontal; sample 4, upward 45° ten times; sample 5, left 45° ten times; sample 6, right 45° ten times. Check for opens and damage in the test cord, clips, and cross-connect modules. Failure consists of structural damage, open circuits through the connector, or inability of module to pass the test connector reliability, jumper wire pullout, and dielectric strength tests described in paragraphs (i)(3)(ii), (i)(3)(iv), and (i)(4)(ii) of this section.

(j) *Packaging and identification requirements*—(1) *Product identification.* (i) Each housing, terminal block, or cross-connect module shall be permanently marked with the manufacturer's name or trade mark.

(ii) The date of manufacture, model number, serial number and RUS assigned designations shall be placed on a decal inside housings. The product identification nomenclature must correspond with the nomenclature used in the manufacturer's quality assurance program.

(2) *Packaging requirements.* (i) Buried plant housings shall be packaged securely in an environmentally safe container to prevent either deterioration or physical damage to the unit during shipment, handling and storage.

(ii) The product with all the necessary parts shall be shipped in one container unless significant advantages to the user can be obtained otherwise. Packaging of parts in the carton shall be such that the parts become available in the order in which they are needed. The package should be clearly marked as to which end to open. Packages shall be clearly labeled, and correspond to the names given in the instructions.

(iii) Products packed in shipping containers shall be cushioned, blocked, braced, and anchored to prevent movement and damage.

(iv) All products shall be secured to pallets with non-metallic strapping. The strapping and the manner employed shall be of sufficient quantity, width, and thickness to preclude failure during transit and handling.

(v) The use of shrink or stretch film to secure the load to the pallet is permitted. However, such film must be applied over the required strapping.

(vi) Containers that are too large or heavy to be palletized, such as crates, shall be shipped in their own containers. When practical, these containers shall be provided with skids to facilitate fork-lift handling.

(vii) When packaged, the outer cartons shall meet the requirements of the Uniform Freight Classification and the National Motor Freight Classification.

(3) *Container marking requirements.* (i) The package shall be readily identifiable as to the manufacturer, model number, date of manufacture, and serial number.

(ii) The RUS assigned housing designation shall be stamped or marked on the outside of the package container with letter and number sizes large enough for easy identification.

(iii) Each package shall be marked with its approximate gross weight.

(iv) All containers carrying delicate or fragile items shall be marked to clearly identify this condition.

(v) All marking shall be clear, legible, and as large as space permits.

(The information and recordkeeping requirements of this section have been approved by the Office of Management and Budget under control number 0572–0059)

[59 FR 53044, Oct. 21, 1994]

PART 1757—TELEPHONE SYSTEMS OPERATIONS AND MAINTENANCE [RESERVED]

PART 1767—ACCOUNTING REQUIREMENTS FOR RUS ELECTRIC BORROWERS

Subpart A—General [Reserved]

1767.1—1767.9 [Reserved]

Subpart B—Uniform System of Accounts

1767.10 Definitions.
1767.11 Purpose.
1767.12 Accounting system requirements.
1767.13 Departures from the prescribed RUS Uniform System of Accounts.
1767.14 Interpretations of the RUS Uniform System of Accounts.
1767.15 General instructions.
1767.16 Electric plant instructions.
1767.17 Operating expense instructions
1767.18 Assets and other debits.
1767.19 Liabilities and other credits.
1767.20 Plant accounts.
1767.21 Operating income.
1767.22 Other income and deductions.
1767.23 Interest charges.
1767.24 Extraordinary items.
1767.25 Retained earnings.
1767.26 Operating revenue.
1767.27 Operation and maintenance expenses.
1767.28 Customer accounts expenses.
1767.29 Customer service and informational expenses.
1767.30 Sales expenses.
1767.31 Administrative and general expenses.
1767.32—1767.40 [Reserved]
1767.41 Accounting methods and procedures required of all RUS borrowers.
1767.42—1767.45 [Reserved]

Subpart C—Depreciation Rates and Procedures [Reserved]

1767.46—1767.65 [Reserved]

Subpart D—Preservation of Records [Reserved]

1767.66—1767.85 [Reserved]

AUTHORITY: 7 U.S.C. 901 *et seq.*, 1921 *et seq.*, 6941 *et seq.*

SOURCE: 58 FR 59825, Nov. 10, 1993, unless otherwise noted.

Subpart A—General [Reserved]

§§ 1767.1—1767.9 [Reserved]

Subpart B—Uniform System of Accounts

§ 1767.10 Definitions.

As used in this part:

Accounting borrower is an RUS borrower.

Accounts are the accounts prescribed in this system of accounts.

Actually issued as applied to securities issued or assumed by the utility, are those which have been sold to bona fide purchasers for a valuable consideration, those issued as dividends on stock, and those which have been issued in accordance with contractual requirements direct to trustees of sinking funds.

Actually outstanding as applied to securities issued or assumed by the utility, are those which have been actually issued and are neither retired nor held by or for the utility; provided, however, that securities held by trustees shall be considered as actually outstanding.

Amortization is the gradual extinguishment of an amount in an account by distributing such amount over a fixed period, over the life of the asset or liability to which it applies, or over the period during which it is anticipated the benefit will be realized.

Associated (affiliated) companies are companies or persons that directly, or indirectly through one or more intermediaries, control, or are controlled by, or under common control with, the accounting company.

Book Cost means the amount at which property is recorded in these accounts without deduction of related provisions for accrued depreciation, amortization, or for other purposes.

Capital lease is a lease of property used in utility or nonutility operations, which meets one or more of the criteria stated in § 1767.15 (s).

CFC is the National Rural Utilities Cooperative Finance Corporation.

Continuing Property Records are company plant records for retirement units and mass property that provide, as either a single record, or in separate records readily obtainable by references made in a single record, the following information:

(1) For each retirement unit:

(i) The name or description of the unit, or both;

(ii) The location of the unit;

(iii) The date the unit was placed in service;

(iv) The cost of the unit as set forth in § 1767.16 (b) and (c); and

(v) The plant control account to which the cost of the unit is charged.

(2) For each category of mass property:

(i) A general description of the property and quantity;

(ii) The quantity placed in service by vintage year;

(iii) The average cost as set forth in § 1767.16 (b) and (c); and

(iv) The plant control account to which the costs are charged.

Control (including the terms *controlling, controlled by,* and *under common control with*) is the possession, directly or indirectly, of the power to direct or cause the direction of the management and policies of a company, whether such power is exercised through one or more intermediary companies, or alone, or in conjunction with, or pursuant to an agreement, and whether such power is established through a majority or minority ownership or through voting of securities; common directors, officers, or stockholders; voting trusts; holding trusts; associated companies; contracts; or any other direct or indirect means.

Cost is the amount of money actually paid for property or services. When the consideration given is other than cash in a purchase and sale transaction, as distinguished from a transaction involving the issuance of common stock in a merger or a pooling of interest, the value of such consideration shall be determined on a cash basis.

Cost of removal is the cost of demolishing, dismantling, tearing down or otherwise removing electric plant, including the cost of transportation and handling incidental thereto.

Customer is a consumer or patron.

Debt expense includes all expenses incurred in connection with the issuance and initial sale of evidence of debt, such as fees for drafting mortgages and trust deeds; fees and taxes for issuing or recording evidences of debt; costs of engraving and printing bonds and certificates of indebtedness; fees paid to trustees; specific costs of obtaining governmental authority; fees for legal services; fees and commissions paid underwriters, brokers, and salesmen for marketing such evidences of debt; fees and expenses of listing on exchanges; and other like costs.

Depreciation, as applied to depreciable electric plant, is the loss in service value, not restored by current maintenance, incurred in connection with the consumption or prospective retirement of electric plant in the course of service from causes which are known to be in current operation and against which the utility is not protected by insurance. Among the causes to be given consideration are wear and tear, decay, action of the elements, inadequacy, obsolescence, changes in the art, changes in demand and requirements of public authorities.

Discount, as applied to the securities issued or assumed by the utility, is the excess of the par (stated value of no-par stocks) or face value of the securities plus interest or dividends accrued at the date of the sale over the cash value of the consideration received from their sale.

FASB is the Financial Accounting Standards Board.

G&T is a generation and transmission cooperative.

Investment advances are advances, represented by notes or by book accounts only, with respect to which it is mutually agreed or intended between the creditor and debtor that they shall be settled by the issuance of securities or shall not be subject to current settlement.

Minor items of property are the associated parts or items of which retirement units are composed.

Net salvage value is the salvage value of property retired less the cost of removal.

Nominally issued, as applied to securities issued or assumed by the utility, are those which have been signed, certified, or otherwise executed, and placed with the proper officer for sale and delivery, or pledged, or otherwise placed in some special funds of the utility, but which have not been sold, or issued direct to trustees of sinking funds in accordance with contractual requirements.

Nominally outstanding, as applied to securities issued or assumed by the utility, are those which, after being actually issued, have been reacquired by or for the utility under circumstances which require them to be considered as held alive and not retired, provided,

however, that securities held by trustees shall be considered as actually outstanding.

NRECA is the National Rural Electric Cooperative Association.

Operating lease is a lease of property used in utility or nonutility operations, which does not meet any of the criteria stated in § 1767.15 (s).

Original cost, as applied to electric plant, is the cost of such property to the person first devoting it to public service.

Person is an individual, a corporation, a partnership, an association, a joint stock company, a business trust, or any organized group of persons, whether incorporated or not, or any receiver or trustee.

Premium, as applied to securities issued or assumed by the utility, is the excess of the cash value of the consideration received from their sale over the sum of their par (stated value of no-par stocks) or face value and interest or dividends accrued at the date of sale.

Project is a complete unit of improvement or development, consisting of a power house, all water conduits, all dams and appurtenant works and structures (including navigation structures) which are a part of said unit, and all storage, diverting, or forebay reservoirs directly connected therewith, the primary line or lines transmitting power therefrom to the point of junction with the distribution system or with the interconnected primary transmission system, all miscellaneous structures used and useful in connection with said unit or any part thereof, and all water rights, rights of way, ditches, dams, reservoirs, lands, or interest in lands the use and occupancy of which are necessary or appropriate in the maintenance and operation of such unit.

Property retired, as applied to electric plant, is property which has been removed, sold, abandoned, destroyed, or which for any cause has been withdrawn from service.

REA means the Rural Electrification Administration formerly an agency of the United States Department of Agriculture and predecessor agency to RUS with respect to administering certain electric and telephone loan programs.

Regulatory Assets and Liabilities are assets and liabilities that result from rate actions of regulatory agencies. Regulatory assets and liabilities arise from specific revenues, expenses, gains, or losses that would have been included in net income determinations in one period under the general requirements of the Uniform System of Accounts but for it being probable:

(1) That such items will be included in a different period(s) for purposes of developing the rates the utility is authorized to charge for its utility services; or

(2) In the case of regulatory liabilities, that refunds to customers, not provided for in the other accounts, will be required.

Replacing (including replacement) when not otherwise indicated in the context, is the construction or installation of electric plant in place of property retired, together with the removal of the property retired.

Research, Development, and Demonstration (RD&D) includes all expenditures incurred by borrowers either directly or through another person or organization (such as a research institute, industry association, foundation, university, engineering company or similar contractor) in pursuing research, development, and demonstration activities including experiment, design, installation, construction, or operation. This definition includes expenditures for the implementation or development of new and/or existing concepts until technically feasible and commercially feasible operations are verified. Such research, development, and demonstration costs should be reasonably related to the existing or future utility business, broadly defined, of the borrower or in the environment in which it operates or expects to operate. The term includes, but is not limited to, all such costs incidental to the design, development or implementation of an experimental facility, a plant process, a product, a formula, an invention, a system or similar items, and the improvement of already existing items of a like nature; amounts expended in connection with the proposed development and/or proposed delivery of alternate sources of electricity; and the costs of obtaining its own patent,

such as attorney's fees expended in making and perfecting a patent application. The term includes preliminary investigations and detailed planning of specific projects for securing for customers non-conventional electric power supplies that rely on technology that has not been verified previously to be feasible. The term does not include expenditures for efficiency surveys; studies of management, management techniques, and organization; or consumer surveys, advertising, promotions, or items of a like nature.

Retirement units are those items of electric plant which, when retired with or without replacement, are accounted for by crediting the book cost thereof to the electric plant accounts in which included.

RUS means the Rural Utilities Service, an agency of the United States Department of Agriculture established pursuant to Section 232 of the Federal Crop Insurance Reform and Department of Agriculture Reorganization Act of 1994 (Pub. L. 103–354, 108 Stat. 3178), successor to REA with respect to administering certain electric and telephone programs. See 7 CFR 1700.1.

RUS Form 7 is the August 1988 revision (or the revision of any other date which may be specified) of such RUS Form 7, Financial and Statistical Report, or any later revision which shall have been at the time prescribed for use by RUS.

RUS Form 12 is the November 1979 revision (or the revision of any other date which may be specified) of such RUS Form 12, Operating Report—Financial, or any later revision which shall have been at the time prescribed for use by RUS.

RUS USoA is the USoA prescribed in this subpart.

Salvage value is the amount received for property retired, less any expenses incurred in connection with the sale or in preparing the property for sale; or, if retained, the amount at which the material recovered is chargeable to materials and supplies, or other appropriate accounts.

Service life is the time between the date electric plant is includible in electric plant in service, or electric plant leased to others, and the date of its retirement. If depreciation is accounted for on a production basis rather than on a time basis, service life should be measured in terms of the appropriate unit of production.

Service value is the difference between original cost and net salvage value of electric plant.

State is a State admitted to the Union, the District of Columbia, and any organized Territory of the United States.

Subsidiary company is a company which is controlled by the utility through ownership of voting stock. (See the definition of control in §1767.10.) A corporate joint venture in which a corporation is owned by a small group of businesses as a separate and specific business or project for the mutual benefit of the members of the group is a subsidiary company for the purposes of this system of accounts.

Utility is an RUS borrower.

Work order is an order authorizing the construction of utility plant. It serves as the basis for the accounts or subaccounts in which costs are recorded.

[58 FR 59825, Nov. 10, 1993, as amended at 59 FR 66440, Dec. 27, 1994]

§1767.11 Purpose.

(a) The standard form of RUS loan documents for electric borrowers requires that the borrower keep books, records, and accounts in which full and true entries will be made of all of the dealings, business and affairs of the borrower in accordance with the methods and principles of accounting of this part.

(b) This subpart implements these provisions of the RUS loan documents by prescribing the RUS USoA for electric borrowers and by providing accounting methodologies and procedures which are applicable to particular situations.

§1767.12 Accounting system requirements.

(a) Each RUS electric borrower must maintain and keep its books of accounts and all other books and records that support the entries in such books of accounts in accordance with §§1767.18–1767.31.

(b) Each RUS electric borrower shall maintain and keep its books of accounts and all other books and records which support the entries in such books of accounts in accordance with § 1767.41, Accounting Methods and Procedures Required of All RUS Borrowers, herein, which prescribes accounting principles to be applied to specific factual circumstances.

§ 1767.13 Departures from the prescribed RUS Uniform System of Accounts.

(a) No departures are to be made to the prescribed RUS USoA without the prior written approval of RUS. RUS grants a departure to any borrower electing to delay implementation of the functional (activity-based) accounting requirements of this part through December 31, 1997. Requests for departures from the RUS USoA shall be addressed, in writing, to the Director, Program Accounting Services Division (PASD).

(b) RUS borrowers subject to the jurisdiction of a state regulatory authority with jurisdiction over rates and/or accounting for electric utilities will not:

(1) Request approval of such authority to use accounting methodologies and principles that depart from the provisions herein; or

(2) File with such authority, any documents or information, including without limitation, any filings associated with the borrower's rates, based upon accounting methods and principles inconsistent with the provisions of this part.

(c) If any state regulatory authority with jurisdiction over an RUS borrower prescribes accounting methods or principles for the borrower that are inconsistent with the provisions of this part, the borrower must immediately notify the Director, BAD, and provide such documents, information, and reports as RUS may request to evaluate the impact that such accounting methods or principles may have on the interests of RUS.

(1) If RUS determines that the accounting methods and principles do not adversely impact RUS interests, RUS will permit the borrower to use the accounting methods and principles as prescribed by the state regulatory authority to comply with the provisions of the RUS loan documents.

(2) If RUS determines that the accounting methods and principles may adversely impact RUS's interests, RUS may require that, for the purposes of complying with provisions of RUS loan documents, including, without limitation, those provisions relating to financial coverage standards (e.g. ''TIER''), the borrower continue to maintain books, records, and accounts in accordance with this subpart.

(i) RUS may, however, approve requests by the borrower to maintain such additional books, records, and accounts as necessary to comply with the requirements of the state regulatory authority.

(ii) Such approval will not waive, modify or amend the requirements of the RUS loan documents or of this subpart.

(d) RUS borrowers will not implement the provisions of Statement of Financial Accounting Standards (SFAS) No. 71, Accounting for the Effects of Certain Types of Regulation, SFAS No. 90, Regulated Enterprises—Accounting for Abandonments and Disallowances of Plant Costs, SFAS No. 92, Regulated Enterprises—Accounting for Phase-in Plans, without the prior written approval of RUS except as provided for in paragraphs (d)(1) through (d)(5) of this section. Requests for approval shall be addressed, in writing, to the Director, PASD. The specific deferrals set forth in paragraphs (d)(1) through (d)(5) of this section may be implemented without the prior written approval of RUS provided that the deferrals comply with Statement No. 71 and that the RUS borrowers implementing such deferrals continue to meet the requirements set forth in Statement No. 71 for doing so:

(1) The deferral and amortization of prior service pension costs (See § 1767.41, Interpretation No. 606, Pension Costs), remapping expenses (See § 1767.41, Interpretation No. 613, Mapping Costs), and preliminary survey and investigation charges (See § 1767.17, Interpretation No. 111, Engineering Contracts for System Planning);

(2) The deferral of any current period expense or expenses, on a cumulative

basis for the fiscal year, only if a borrower would have met each of its financial tests or coverage ratios that it has covenanted with RUS to meet for that fiscal year, had the deferral not been made;

(3) The deferral of any cost that will be fully amortized within the next 12 succeeding months;

(4) The accelerated amortization of any previously deferred expense; and

(5) The deferral of revenues coincident with a moratorium imposed by the National Rural Electric Cooperative Association on its Retirement and Security Program, provided, however, that the deferral is for the sole purpose of offsetting future pension costs.

(e) RUS will consider approval of specific departures from this part upon submission of:

(1) A detailed description of the proposed departure;

(2) The specific accounting journal entries that will be used including the account number and title, and the dollar amounts where appropriate;

(3) The total dollar amount of the departure and the impact on margins during the time period of the departure; and

(4) Any additional information RUS may deem necessary to adequately evaluate the borrower's request.

(f) RUS will, within 90 days of final receipt of this information, render a decision on the borrower's request for a departure from the prescribed RUS USoA.

(1) If, due to extenuating circumstances, RUS is unable to reach a decision within the required time period, RUS will notify the borrower of the delay within this same 90-day period, and provide a projected decision date.

(2) The requested departure from the prescribed RUS USoA must not be implemented until final approval is granted by RUS.

[58 FR 59825, Nov. 10, 1993, as amended at 60 FR 55429, Nov. 1, 1995; 62 FR 42289, Aug. 6, 1997]

§ 1767.14 Interpretations of the RUS Uniform System of Accounts.

To maintain uniformity in accounting, borrowers must submit questions concerning interpretations of the RUS USoA, in writing, to the Director, BAD, for consideration and decision.

(Approved by the Office of Management and Budget under control number 0572–0002)

[60 FR 55429, Nov. 1, 1995]

§ 1767.15 General instructions.

(a) *Records.* (1) Each utility shall keep its books of account, and all other books, records, and memoranda which support the entries in such books of account so as to be able to furnish readily full information as to any item included in any account.

(2) Each entry shall be supported by such detailed information as will permit ready identification, analysis, and verification of all facts relevant thereto.

(3) The books and records referred to herein include not only accounting records in a limited technical sense, but all other records, such as minute books, stock books, reports, correspondence, memoranda, etc., which may be useful in developing the history of or facts regarding any transaction.

(4) No utility shall destroy any such books or records unless the destruction thereof is permitted by the rules and regulations of RUS in 7 CFR chapter XVII.

(5) In addition to the prescribed accounts, clearing accounts, temporary or experimental accounts, and subdivisions of any accounts, may be kept, provided the integrity of the prescribed accounts is not impaired.

(6) All amounts included in the accounts prescribed herein for electric plant and operating expenses shall be just and reasonable and any payments or accruals by the utility in excess of just and reasonable charges shall be included in Account 426.5, Other Deductions.

(7) The arrangement or sequence of the accounts prescribed herein shall not be controlling as to the arrangement or sequence in report forms which may be prescribed by RUS.

(b) *Numbering system.* (1) The account numbering plan used herein consists of a system of three-digit whole numbers as follows:

100–199 Assets and other debits.
200–299 Liabilities and other credits.
300–399 Plant accounts.

400–432, 434–435 Income accounts.
433, 436–439 Retained earnings accounts.
440–459 Revenue accounts.
500–599 Production, transmission, and distribution expenses.
900–949 Customer accounts, customer service and informational, sales, and general and administrative expenses.

(2) In certain instances, numbers have been skipped in order to allow for possible later expansion or to permit better coordination with the numbering system for other utility departments.

(3) The numbers prefixed to account titles are to be considered as parts of the titles.

(i) Each utility, however, may adopt, for its own purposes, a different system of account numbers provided that the numbers herein prescribed shall appear in the descriptive headings of the ledger accounts and in the various sources of original entry.

(ii) If a utility uses a different group of account numbers and it is not practicable to show the prescribed account numbers in the various sources of original entry, such reference to the prescribed account numbers may be omitted from the various sources of original entry.

(iii) Each utility using different account numbers for its own purposes shall keep readily available, a list of such account numbers which it uses and a reconciliation of such account numbers with the account numbers provided herein.

(iv) The utility's records shall be so kept as to permit ready analysis by prescribed accounts (by direct reference to sources of original entry to the extent practicable) and to permit preparation of financial and operating statements directly from such records at the end of each accounting period according to the prescribed accounts.

(c) *Accounting period.* (1) Each utility shall keep its books on a monthly basis so that for each month, all transactions applicable thereto, as nearly as may be ascertained, shall be entered in the books of the utility.

(2) Amounts applicable or assignable to specific utility departments shall be so segregated monthly.

(3) Each utility shall close its books at the end of each fiscal year unless otherwise authorized by RUS.

(d) *Submission of questions.* To maintain uniformity of accounting, utilities shall submit questions of doubtful interpretation to RUS for consideration and decision.

(e) *Item lists.* (1) Lists of ''items'' appearing in the texts of the accounts or elsewhere herein are for the purpose of more clearly indicating the application of the prescribed accounting.

(2) The lists are intended to be representative, but not exhaustive.

(3) The appearance of an item in a list warrants the inclusion of the item in the account mentioned only when the text of the account also indicates inclusion inasmuch as the same item frequently appears in more than one list.

(4) The proper entry in each instance must be determined by the texts of the accounts.

(f) *Extraordinary items.* (1) Net income shall reflect all items of profit and loss during the period with the exception of prior period adjustments as described in § 1767.15 (g) and long-term debt as described in § 1767.15 (q).

(2) Those items related to the effects of events and transactions which have occurred during the current period and which are not typical or customary business activities of the company shall be considered extraordinary items.

(3) They will be events and transactions of significant effect which would not be expected to recur frequently and which would not be considered as recurring factors in any evaluation of the ordinary operating processes of business.

(i) In determining significance, items of a similar nature should be considered in the aggregate.

(ii) Dissimilar items should be considered individually; however, if they are few in number, they may be considered in the aggregate.

(iii) To be considered as extraordinary under the above guidelines, an item should be more than approximately 5 percent of income, computed before extraordinary items.

(iv) RUS approval must be obtained to treat an item of less than 5 percent, as extraordinary. (See Accounts 434 and 435.)

(g) *Prior period items.* (1) Items of profit and loss related to the following shall be accounted for as prior period adjustments and excluded from the determination of net income for the current year:

(i) Correction of an error in the financial statements of a prior year

(ii) Adjustments that result from realization of income tax benefits of preacquisition operating loss carryforwards of purchased subsidiaries.

(2) All other items of profit and loss recognized during the year shall be included in the determination of net income for that year.

(h) *Unaudited items.* (1) Whenever a financial statement is required by RUS, if it is known that a transaction has occurred which affects the accounts but the amount involved in the transaction and its effect upon the accounts cannot be determined with absolute accuracy, the amount shall be estimated and such estimated amount included in the proper accounts.

(2) The utility is not required to anticipate minor items which would not appreciably affect the accounts.

(i) *Distribution of pay and expenses of employees.* Charges to electric plant, operating expense, and other accounts for services and expenses of employees engaged in activities chargeable to various accounts, such as construction, maintenance, and operations, shall be based upon the actual time engaged in the respective classes of work, or in case that method is impracticable, upon the basis of a study of the time actually engaged during a representative period.

(j) *Payroll distribution.* (1) Underlying accounting data shall be maintained so that the distribution of the cost of labor charged direct to the various accounts will be readily available.

(2) Such underlying data shall permit a reasonably accurate distribution to be made of the cost of labor charged initially to clearing accounts so that the total labor cost may be classified among construction, cost of removal, electric operating functions (steam generation, nuclear generation, hydraulic generation, transmission, distribution, etc.) and nonutility operations.

(k) *Accounting on an accrual basis.* (1) The utility is required to keep its accounts on the accrual basis.

(i) This requires the inclusion, in its accounts, of all known transactions of appreciable amount which affect the accounts.

(ii) If bills covering such transactions have not been received or rendered, the amounts shall be estimated and appropriate adjustments made when the bills are received.

(2) When payments are made in advance for items such as insurance, rents, taxes, or interest, the amount applicable to future periods shall be charged to Account 165, Prepayments, and spread over the periods to which applicable, by credits to Account 165, and charges to the accounts appropriate for the expenditure.

(l) *Records for each plant.* (1) Separate records shall be maintained by electric plant accounts of the book cost of each plant owned, including additions by the utility to plant leased from others, and of the cost of operating and maintaining each plant owned or operated.

(2) The term ''plant'' as used herein includes each generating station and each transmission line or appropriate group of transmission lines.

(m) *Accounting for other departments.* (1) If the utility also operates other utility departments, such as gas or water, it shall keep such accounts for the other departments as may be prescribed by proper authority and in the absence of prescribed accounts, it shall keep such accounts as are proper or necessary to reflect the results of operating each such department.

(2) It is not intended that proprietary and similar accounts which apply to the utility as a whole shall be departmentalized.

(n) *Transactions with associated companies.* (1) Each utility shall keep its accounts and records so as to be able to furnish accurately and expeditiously statements of all transactions with associated companies.

(2) The statements may be required to show the general nature of the transactions, the amounts involved therein and the amounts included in each account prescribed herein with respect to such transactions. Transactions with associated companies

shall be recorded in the appropriate accounts for transactions of the same nature. Nothing herein contained, however, shall be construed as restraining the utility from subdividing accounts for the purpose of recording separately transactions with associated companies.

(o) *Contingent assets and liabilities.* (1) Contingent assets represent a possible source of value to the utility contingent upon the fulfillment of conditions regarded as uncertain.

(2) Contingent liabilities include items which may, under certain conditions, become obligations of the utility but which are neither direct nor assumed liabilities at the date of the balance sheet. The utility shall be prepared to give a complete statement of significant contingent assets and liabilities (including cumulative dividends on preference stock) in its audited financial statements; its RUS Form 7, Financial and Statistical Report, or its RUS Form 12, Operating Report—Financial; and at such other times as may be requested by RUS.

(p) *Separate accounts or records for each licensed project.* The accounts or records of each borrower shall be so kept as to show for each project (including pumped storage) under license:

(1) The actual legitimate original cost of the project, including the original cost of the original project, the original cost of additions thereto and betterments thereof, and credits for property retired from service, as determined under RUS's regulations in 7 CFR chapter XVII;

(2) The charges for operation and maintenance of the project property directly assignable to the project;

(3) The credits and debits to the depreciation and amortization accounts, and the balances in such accounts; and

(4) The credits and debits to the operating revenue, income, and retained earnings accounts that can be identified with and directly assigned to the project.

NOTE: The purpose of this instruction is to insure that accounts or records are currently maintained by each borrower from which reports may be made to RUS for use in determining the net investment in each licensed project. The instruction covers only the debit and credit items appearing in the borrower's accounts which may be identified with and assigned directly to any project. In the determination of the net investment, allocations of items affecting the net investment may be required where direct assignment is not practicable.

(q) *Long-term debt: premium, discount and expense, and gain or loss on reacquisition*—(1) *Premium, discount and expense.* (i) A separate premium, discount and expense account shall be maintained for each class and series of long-term debt (including receivers' certificates) issued or assumed by the utility.

(ii) The premium will be recorded in Account 225, Unamortized Premium on Long-Term Debt, the discount will be recorded in Account 226, Unamortized Discount on Long-Term Debt—Debit, and the expense of issuance shall be recorded in Account 181, Unamortized Debt Expense.

(iii) The premium, discount and expense shall be amortized over the life of the respective issues under a plan which will distribute the amounts equitably over the life of the securities.

(A) The amortization shall be charged or credited on a monthly basis with the amounts relating to discount and expense charged to Account 428, Amortization of Debt Discount and Expense.

(B) The amounts relating to premium shall be credited to Account 429, Amortization of Premium on Debt—Credit.

(2) *Reacquisition, without refunding.* (i) When long-term debt is reacquired or redeemed without being converted into another form of long-term debt and when the transaction is not in connection with a refunding operation (primarily redemptions for sinking fund purposes), the difference between the amount paid upon reacquisition and the face value; plus any unamortized premium less any related unamortized debt expense and reacquisition costs; or less any unamortized discount, related debt expense and reacquisition costs applicable to the debt redeemed, retired and cancelled, shall be included in Account 189, Unamortized Loss on Reacquired Debt, or Account 257, Unamortized Gain on Reacquired Debt, as appropriate.

(ii) The utility shall amortize the recorded amounts equally on a monthly

basis over the remaining life of the respective security issues (old original debt).

(iii) The amount so amortized shall be charged to Account 428.1, Amortization of Loss on Reacquired Debt, or credited to Account 429.1, Amortization of Gain on Reacquired Debt—Credit, as appropriate.

(3) *Reacquisition, with refunding.* (i) When the redemption of one issue or series of bonds or other long-term obligations is financed by another issue or series before the maturity date of the first issue, the difference between the amount paid upon refunding and the face value; plus any unamortized premium less related debt expense or less any unamortized discount and related debt expense, applicable to the debt refunded, shall be included in Account 189, Unamortized Loss on Reacquired Debt, or Account 257, Unamortized Gain on Reacquired Debt, as appropriate.

(ii) The utility may elect to account for such amounts as follows:

(A) Write them off immediately when the amounts are insignificant;

(B) Amortize them by equal monthly amounts over the remainder of the original life of the issue retired; or

(C) Amortize them by equal monthly amounts over the life of the new issue.

(iii) Once an election is made, it shall be applied on a consistent basis.

(iv) The amounts in paragraphs (q)(3)(ii)(A), (B), or (C) of this section shall be charged to Account 428.1, Amortization of Loss on Reacquired Debt, or credited to Account 429.1, Amortization of Gain on Reacquired Debt—Credit, as appropriate.

(4) Under methods in paragraphs (q)(3)(ii)(B) and (C) of this section, the increase or reduction in current income taxes resulting from the reacquisition should be apportioned over the remainder of the original life of the issued retired or over the life of the new issue, as appropriate, as directed more specifically in paragraphs (q)(5) and (6) of this section.

(5) When the utility recognizes the loss in the year of reacquisition as a tax deduction, Account 410.1, Provision for Deferred Income Taxes, Utility Operating Income, shall be debited and Account 283, Accumulated Deferred Income Taxes—Other, shall be credited with the amount of the related tax effect, such amount to be allocated to the periods affected in accordance with the provisions of Account 283.

(6) When the utility chooses to recognize the gain in the year of reacquisition as a taxable gain, Account 411.1, Provision for Deferred Income Taxes—Credit, Utility Operating Income, shall be debited with the amount of the related tax effect, such amount to be allocated to the periods affected in accordance with the provisions of Account 190, Accumulated Deferred Income Taxes.

(7) When the utility chooses to use the optional privilege of deferring the tax on the gain attributable to the reacquisition of debt by reducing the depreciable basis of utility property for tax purposes, pursuant to Section 108 of the Internal Revenue Code (26 U.S.C. 108), the related tax effects shall be deferred as the income is recognized for accounting purposes, and the deferred amounts shall be amortized over the life of the associated property on a vintage year basis.

(i) Account 410.1, Provision for Deferred Income Taxes, Utility Operating Income, shall be debited, and Account 282, Accumulated Deferred Income Taxes—Other Property, shall be credited with an amount equal to the estimated income tax effect applicable to the portion of the income, attributable to reacquired debt, recognized for accounting purposes during the period.

(ii) Account 282 shall be debited and Account 411.1, Provision for Deferred Income Taxes—Credit, Utility Operating Income, shall be credited with an amount equal to the estimated income tax effects, during the life of the property, attributable to the reduction in the depreciable basis for tax purposes.

(8) The tax effects relating to gain or loss shall be allocated as above to utility operations except in cases where a portion of the debt reacquired is directly applicable to nonutility operations.

(i) In that event, the related portion of the tax effects shall be allocated to nonutility operations.

(ii) Where it can be established that reacquired debt is generally applicable

to both utility and nonutility operations, the tax effects shall be allocated between utility and nonutility operations based on the ratio of net investment in utility plant to net investment in nonutility plant.

(9) Premium, discount, or expense on debt shall not be included as an element in the cost of construction or acquisition of property (tangible or intangible), except under the provisions of Account 432, Allowance for Borrowed Funds Used During Construction—Credit.

(10) *Alternate method.* Where a regulatory authority or a group of regulatory authorities having prime rate jurisdiction over the utility specifically disallows the rate principle of amortizing gains or losses on reacquisition of long-term debt without refunding, and does not apply the gain or loss to reduce interest charges in computing the allowed rate of return for rate purposes, the following alternate method may be used to account for gains or losses relating to reacquisition of long-term debt, with or without refunding:

(i) The difference between the amount paid upon reacquisition of any long-term debt and the face value, adjusted for unamortized discount, expenses or premium, as the case may be, applicable to the debt redeemed shall be recognized currently in income and recorded in Account 421, Miscellaneous Nonoperating Income, or Account 426.5, Other Deductions.

(ii) When this alternate method of accounting is used, the utility shall include a footnote to each financial statement, prepared for public use, explaining why this method is being used along with the treatment given for ratemaking purposes.

(r) *Comprehensive interperiod income tax allocation.* (1) Where there are timing differences between the periods in which transactions affect taxable income and the periods in which they enter into the determination of pretax accounting income, the income tax effects of such transactions are to be recognized in the periods in which the differences between book accounting income and taxable income arise and in the periods in which the differences reverse using the deferred tax method.

(2) Comprehensive interperiod tax allocation should be followed whenever transactions enter into the determination of pretax accounting income for the period even though some transactions may affect the determination of taxes payable in a different period.

(3) Utilities are not required to utilize comprehensive interperiod income tax allocation until the deferred income taxes are included as an expense in the rate level by the regulatory authority having rate jurisdiction over the utility.

(4) Where comprehensive interperiod tax allocation accounting is not practiced the utility shall include as a note to each financial statement, prepared for public use, a footnote explanation setting forth the utility's accounting policies with respect to interperiod tax allocation and describing the treatment for rate making purposes of the tax timing differences by regulatory authorities having rate jurisdiction.

(5) Should the utility be subject to more than one agency having rate jurisdiction, its accounts shall appropriately reflect the ratemaking treatment (deferral or flow through) of each jurisdiction.

(6) Once comprehensive interperiod tax allocation has been initiated either in whole or in part it shall be practiced on a consistent basis and shall not be changed or discontinued without prior RUS approval.

(7) Tax effects deferred currently will be recorded as deferred debits or deferred credits in Accounts 190, Accumulated Deferred Income Taxes; 281, Accumulated Deferred Income Taxes—Accelerated Amortization Property; 282, Accumulated Deferred Income Taxes—Other Property, and 283, Accumulated Deferred Taxes—Other, as appropriate.

(8) The resulting amounts recorded in these accounts shall be disposed of as prescribed in this system of accounts or as otherwise authorized by RUS.

(s) *Criteria for classifying leases.* (1) If, at its inception, a lease meets one or more of the following criteria, the lease shall be classified as a capital lease:

(i) The lease transfers ownership of the property to the lessee by the end of the lease term.

(ii) The lease contains a bargain purchase option.

(iii) The lease term is equal to 75 percent or more of the estimated economic life of the leased property. However, if the beginning of the lease term falls within the last 25 percent of the total estimated economic life of the leased property, including earlier years of use, this criterion shall not be used for purposes of classifying the lease.

(iv) The present value at the beginning of the lease term of the minimum lease payments, excluding that portion of the payments representing executory costs such as insurance, maintenance, and taxes to be paid by the lessor, including any profit thereon, equals or exceed 90 percent of the excess of the fair value of the leased property to the lessor at the inception of the lease over any related investment tax credit retained by the lessor and expected to be realized by lessor.

(A) However, if the beginning of the lease term falls within the last 25 percent of the total estimated economic life of the leased property, including earlier years of use, this criterion shall not be used for purposes of classifying the lease.

(B) The lessee utility shall compute the present value of the minimum lease payments using its incremental borrowing rate, unless it is practicable for the utility to learn the implicit rate computed by the lessor, and the implicit rate computed by the lessor is less than the lessee's incremental borrowing rate. If both of those conditions are met, the lessee shall use the implicit rate.

(2) If, at any time, the lessee and lessor agree to change the provisions of the lease, other than by renewing the lease or extending its term, in a manner that would have resulted in a different classification of the lease under the criteria in paragraph (s)(1) of this section had the changed terms been in effect at the inception of the lease, the revised agreement shall be considered as a new agreement over its term, and the criteria in paragraph (s)(1) of this section shall be applied for purposes of the expiration of the existing lease term, such as the exercise of a lease renewal option other than those already included in the lease term, shall be considered as a new agreement and shall be classified according to the above provision. Changes in estimates (for example, changes in estimates of the economic life or of the residual value of the leased property) or changes in circumstances (for example, default by the lessee) shall not give rise to a new classification of a lease for accounting purposes.

(t) *Accounting for leases.* (1) All leases shall be classified as either capital or operating leases.

(2) The utility shall record a capital lease as an asset in Account 101.1, Property Under Capital Leases, and Account 120.6, Nuclear Fuel Under Capital Leases; as appropriate, and an obligation in Account 227, Obligations Under Capital Leases—Noncurrent, or Account 243, Obligations Under Capital Leases—Current, at an amount equal to the present value at the beginning of the lease term of minimum lease payments during the lease term, excluding that portion of the payments representing executory costs such as insurance, maintenance, and taxes to be paid by the lessor, together with any profit thereon. However, if the amount so determined exceeds the fair value of the leased property at the inception of the lease, the amount recorded as the asset and obligation shall be the fair value.

(3) Rental payments on all leases shall be charged to rent expense, fuel expense, construction work in progress, or other appropriate accounts as they become payable.

(4) For a capital lease, for each period during the lease term, the amounts recorded for the asset and obligation shall be reduced by an amount equal to the portion of each lease payment that would have been allocated to the reduction of the obligation, if the payment had been treated as a payment on an installment obligation (liability) and allocated between interest expense and a reduction of the obligation so as to produce a constant periodic rate of interest on the remaining balance.

(u) *Allowances.* (1) Title IV of the Clean Air Act Amendments of 1990, Pub. L. 101–549, 104 Stat. 2399, 2584 (42 U.S.C. 7407 and 42 U.S.C. 7651), provides for the issuance of allowances as a means to limit the emissions of certain

airborne pollutants by various entities, including utilities. Utilities owning allowances, other than those acquired for speculative purposes, shall account for such allowances at cost in Account 158.1, Allowance Inventory, or Account 158.2, Allowances Withheld, as appropriate. Allowances acquired for speculative purposes and identified as such in contemporaneous records at the time of purchase shall be accounted for in Account 124, Other Investments.

(2) When purchased, allowances become eligible for use in different years, and the allocation of the purchase cost cannot be determined by fair value, the purchase cost allocated to allowances of each vintage shall be determined through use of a present-value based measurement. The interest rate used in the present-value measurement shall be the utility's incremental borrowing rate, in the month in which the allowances are acquired, for a loan with a term similar to the period that it will hold the allowances and in an amount equal to the purchase price.

(3) The underlying records supporting Account 158.1 and Account 158.2 shall be maintained in sufficient detail so as to provide the number of allowances and the related cost by vintage year.

(4) Issuances from inventory included in Account 158.1 and Account 158.2 shall be accounted for on a vintage basis using a monthly weighted-average method of cost determination. The cost of eligible allowances not used in the current year shall be transferred to the vintage for the immediately following year.

(5) Account 158.1 shall be credited and Account 509, Allowances, debited so that the cost of the allowances to be remitted for the year is charged to expense monthly based on each month's emissions. This may, in certain circumstances, require allocation of the cost of an allowance between months on a fractional basis.

(6) In any period in which actual emissions exceed the amount allowable based on eligible allowances owned, the utility shall estimate the cost to acquire the additional allowances needed and charge Account 158.1 with the estimated cost. This estimated cost of future allowance acquisitions shall be credited to Account 158.1 and charged to Account 509 in the same accounting period as the related charge to Account 158.1. Should the actual cost of these allowances differ from the estimated cost, the differences shall be recognized in the then-current period's inventory issuance cost.

(7) Any penalties assessed by the Environmental Protection Agency for the emission of excess pollutants shall be charged to Account 426.3, Penalties.

(8) Gains on dispositions of allowances, other than allowances held for speculative purposes, shall be accounted for as follows. First, if there is uncertainty as to the regulatory treatment, the gain shall be deferred in Account 254, Other Regulatory Liabilities, pending resolution of the uncertainty. Second, if there is certainty as to the existence of a regulatory liability, the gain will be credited to Account 254, with subsequent recognition in income when reductions in charges to customers occur or the liability is otherwise satisfied. Third, all other gains will be credited to Account 411.8, Gains from Disposition of Allowances. Losses on disposition of allowances, other than allowances held for speculative purposes, shall be accounted for as follows. Losses that qualify as regulatory assets shall be charged directly to Account 182.3, Other Regulatory Assets. All other losses shall be charged to Account 411.9, Losses from Disposition of Allowances. (See the definition of regulatory assets and liabilities.) Gains or losses on disposition of allowances held for speculative purposes shall be recognized in Account 421, Miscellaneous Nonoperating Income, or Account 426.5, Other Deductions, as appropriate.

(9) The costs and benefits of exchange-traded allowance futures contracts used to protect the utility from the risk of unfavorable price changes (''hedging transactions'') shall be deferred in Account 186, Miscellaneous Deferred Debits, or Account 253, Other Deferred Credits, as appropriate. Such deferred amounts shall be included in Account 158.1, Allowance Inventory, in the month in which the related allowances are acquired, sold or otherwise disposed of. Where the costs or benefits of hedging transactions are not identifiable with specific allowances, the

amounts shall be included in Account 158.1 when the futures contract is closed. The costs and benefits of exchange-traded allowance futures contracts entered into as a speculating activity shall be charged or credited to Account 421, Miscellaneous Nonoperating Income, or Account 426.5, Other Deductions, as appropriate.

§1767.16 Electric plant instructions.

(a) *Classification of electric plant at effective date of system of accounts.* (1) The electric plant accounts provided herein are the same as those contained in the prior system of accounts except for inclusion of accounts for nuclear production plant and some changes in classification in the general equipment accounts. Except for these changes, the balances in the various plant accounts, as determined under the prior system of accounts, should be carried forward. Any remaining balance of plant which has not yet been classified, pursuant to the requirements of the prior system, shall be classified in accordance with the following instructions.

(2) The cost to the utility of its unclassified plant shall be ascertained by analysis of the utility's records. Adjustments shall not be made to record in utility plant accounts amounts previously charged to operating expenses or to income deductions in accordance with the USoA in effect at the time or in accordance with the discretion of management as exercised under a USoA, or under accounting practices previously followed.

(3) The detailed electric plant accounts (301 to 399, inclusive) shall be stated on the basis of cost to the utility of plant constructed by it and the original cost, estimated if not known, of plant acquired as an operating unit or system. The difference between the original cost, as above, and the cost to the utility of electric plant after giving effect to any accumulated provision for depreciation or amortization shall be recorded in Account 114, Electric Plant Acquisition Adjustments. The original cost of electric plant shall be determined by analysis of the utility's records or those of the predecessor or vendor companies with respect to electric plant previously acquired as operating units or systems and the difference between the original cost so determined, less accumulated provisions for depreciation and amortization and the cost to the utility with necessary adjustments for retirements from date of acquisition, shall be entered in Account 114, Electric Plant Acquisition Adjustments. Any difference between the cost of electric plant and its book cost, when not properly includible in other accounts, shall be recorded in Account 116, Other Electric Plant Adjustments.

(b) *Electric plant to be recorded at cost.* (1) All amounts included in the accounts for electric plant acquired as an operating unit or system, except as otherwise provided in the texts of the intangible plant accounts, shall be stated at the cost incurred by the person who first devoted the property to utility service. All other electric plant shall be included in the accounts at the cost incurred by the utility except for property acquired by lease which qualifies as capital lease property under §1767.15 (s), Criteria for Classifying Leases, and is recorded in Account 101.1, Property Under Capital Lease, or Account 120.6, Nuclear Fuel Under Capital Leases. Where the term ''cost'' is used in the detailed plant accounts, it shall have the meaning stated in this paragraph (b).

(2) When the consideration given for property is other than cash, the value of such consideration shall be determined on a cash basis (see, however, the definition of cost in §1767.10). In the entry recording such transition, the actual consideration shall be described with sufficient particularity to identify it. The utility shall be prepared to furnish RUS the particulars of its determination of the cash value of the consideration if other than cash.

(3) When property is purchased under a plan involving deferred payments, no charge shall be made to the electric plant accounts for interest, insurance, or other expenditures occasioned solely by such form of payment.

(4) The electric plant accounts shall not include the cost or other value of electric plant contributed to the company. Contributions in the form of money or its equivalent toward the construction of electric plant shall be credited to accounts charged with the

cost of such construction. Plant constructed from contributions of cash or its equivalent shall be shown as a reduction to gross plant constructed when assembling cost data in work orders for posting to plant ledgers of accounts. The accumulated gross costs of plant accumulated in the work order shall be recorded as a debit in the plant ledger of accounts along with the related amount of contributions concurrently be recorded as a credit.

(c) *Components of construction cost.* The cost of construction properly includible in the electric plant accounts shall include, where applicable, the direct and overhead costs as listed and defined hereunder:

(1) *Contract work* includes amounts paid for work performed under contract by other companies, firms, or individuals, costs incident to the award of such contracts, and the inspection of such work.

(2) *Labor* includes the pay and expenses of employees of the utility engaged on construction work, and related workmen's compensation insurance, payroll taxes, and similar items of expense. It does not include the pay and expenses of employees which are distributed to construction through clearing accounts nor the pay and expenses included in other items hereunder.

(3) *Materials and supplies* includes the purchase price at the point of free delivery plus customs duties, excise taxes, the cost of inspection, loading and transportation, the related stores expenses, and the cost of fabricated materials from the utility's shop. In determining the cost of materials and supplies used for construction, proper allowance shall be made for unused materials and supplies, for materials recovered from temporary structures used in performing the work involved, and for discounts allowed and realized in the purchase of materials and supplies.

NOTE: The cost of individual items of equipment of small value (for example, $500 or less) or of short life, including small portable tools and implements, shall not be charged to utility plant accounts unless the correctness of the accounting therefor is verified by current inventories. The cost shall be charged to the appropriate operating expense or clearing accounts, according to the use of such items, or, if such items are consumed directly in construction work, the cost shall be included as part of the cost of the construction.

(4) *Transportation* includes the cost of transporting employees, materials and supplies, tools, purchased equipment, and other work equipment (when not under own power) to and from points of construction. It includes amounts paid to others as well as the cost of operating the utility's own transportation equipment. (See Item in paragraph (c)(5) of this section.)

(5) *Special machine service* includes the cost of labor (optional), materials and supplies, depreciation, and other expenses incurred in the maintenance, operation and use of special machines, such as steam shovels, pile drivers, derricks, ditchers, scrapers, material unloaders, and other labor saving machines; also expenditures for rental, maintenance and operation of machines of others. It does not include the cost of small tools and other individual items of small value or short life which are included in the cost of materials and supplies. (See Item in paragraph (c)(3) of this section.) When a particular construction job requires the use for an extended period of time of special machines, transportation or other equipment, the net book cost thereof, less the appraised or salvage value at time of release from the job, shall be include in the cost of construction.

(6) *Shop service* includes the proportion of the expense of the utility's shop department assignable to construction work except that the cost of fabricated materials from the utility's shop shall be included in ''materials and supplies.''

(7) *Protection* includes the cost of protecting the utility's property from fire or other casualties and the cost of preventing damages to others, or to the property of others, including payments for discovery or extinguishment of fires, cost of apprehending and prosecuting incendiaries, witness fees in relation thereto, amounts paid to municipalities and others for fire protection, and other analogous items of expenditures in connection with construction work.

(8) *Injuries and damages* includes expenditures or losses in connection with

construction work on account of injuries to persons and damages to the property of others; also the cost of investigation of and defense against actions for such injuries and damages. Insurance recovered or recoverable on account of compensation paid for injuries to persons incident to construction shall be credited to the account or accounts to which such compensation is charged. Insurance recovered or recoverable on account of property damages incident to construction shall be credited to the account or accounts charged with the cost of the damages.

(9) *Privileges and permits* includes payments for and expenses incurred in securing temporary privileges, permits or rights in connection with construction work, such as for the use of private or public property, streets, or highways, but it does not include rents, or amounts chargeable as franchises and consents for which see Account 302, Franchises and Consents.

(10) *Rents* includes amounts paid for the use of construction quarters and office space occupied by construction forces and amounts properly includible in construction costs for such facilities jointly used.

(11) *Engineers and supervision* includes the portion of the pay and expenses of engineers, surveyors, draftsmen, inspectors, superintendents and their assistants applicable to construction work.

(12) *General administration capitalized* includes the portion of the pay and expenses of the general officers and administrative and general expenses applicable to construction work.

(13) *Engineering services* includes amounts paid to other companies, firms, or individuals engaged by the utility to plan, design, prepare estimates, supervise, inspect, or give general advice and assistance in connection with construction work.

(14) *Insurance* includes premiums paid or amounts provided or reserved as self-insurance for the protection against loss and damages in connection with construction, by fire or other casualty, injuries or deaths of persons other than employees, damages to property of others, defalcation of employees and agents, and the nonperformance of contractual obligations of others. It does not include workmen's compensation or similar insurance on employees included as ''labor'' in Item in paragraph (c)(2) of this section.

(15) *Law expenditures* includes the general law expenditures incurred in connection with construction and the court and legal costs directly related thereto, other than law expenses included in ''Protection,'' Item in paragraph (c)(7) of this section, and in Injuries and damages, Item in paragraph (c)(8) of this section.

(16) *Taxes* includes taxes on physical property (including land) during the period of construction and other taxes properly includible in construction costs before the facilities become available for service.

(17) *Allowance for funds used during construction* includes the net cost for the period of construction of borrowed funds used for construction purposes and a reasonable rate on other funds when so used, not to exceed, without prior approval of RUS, allowances computed in accordance with the formula prescribed in Item in paragraph (c)(17)(i) of this section. No allowance for funds used during construction charges shall be included in these accounts upon expenditures for construction projects which have been abandoned.

(i) The formula and elements for the computation of the allowance for funds used during construction shall be:

$$A_i = s\left(\frac{S}{W}\right) + d\left(\frac{D}{D+P+C}\right)\left(1-\frac{S}{W}\right)$$

$$A_c = \left[1-\frac{S}{W}\right]\left[P\left(\frac{P}{D+P+C}\right) + c\left(\frac{C}{D+P+C}\right)\right]$$

Where:

A_i = Gross allowance for borrowed funds used during construction rate.
A_c = Allowance for other funds used during construction rate.
S = Average short-term debt.
s = Short-term debt interest rate.
D = Long-term debt.
d = Long-term debt interest rate.
P = Preferred stock.
p = Preferred stock cost rate.
C = Patronage capital assigned.
c = Entity's incremental borrowing rate.
W = Average balance in construction work in progress plus nuclear fuel in process of refinement, conversion, enrichment, and fabrication.

(ii) The rate shall be determined annually.

(A) The balance for long-term debt, preferred stock, and patronage capital assigned shall be the actual book balances as of the end of the prior year.

(B) The cost rate for long-term debt and preferred stock shall be the weighted average cost.

(C) The cost rate for patronage capital assigned shall be the entity's incremental borrowing rate.

(D) The short-term debt balances and related cost and the average balance for construction work in progress plus nuclear fuel in process of refinement, conversion, enrichment, and fabrication shall be estimated for the current year with appropriate adjustments as actual data becomes available.

NOTE: When only a portion of a plant or project is placed in operation or is completed and ready for service but the construction work as a whole is incomplete, that part of the cost of the property placed in operation or ready for service shall be treated as ''Electric Plant in Service,'' and an allowance for funds used during construction thereon as a charge to construction shall cease. Allowance for funds used during construction on that part of the cost of the plant which is incomplete may continue to be charged to construction until such time as it is placed in operation or is ready for service, except as limited in Item in paragraph (c)(17) of this section.

(18) *Earnings and expenses during construction.* The earnings and expenses during construction shall constitute a component of construction costs.

(i) The earnings shall include revenues received or earned for power produced by generating plants during the construction period and sold or used by the utility.

(A) Where such power is sold to an independent purchaser before intermingling with power generated by other plants, the credit shall consist of the selling price of the energy.

(B) Where the power generated by a plant under construction is delivered to the utility's electric system for distribution and sale, or is delivered to an associated company, or is delivered to and used by the utility for purposes other than distribution and sale (for manufacturing or industrial use, for example), the credit shall be the fair value of the energy so delivered.

(C) Revenue shall also include rentals for lands, buildings, and other property, and miscellaneous receipts not properly includible in other accounts.

(ii) Expenses shall consist of the cost of operating the power plant, and other costs incident to the production and delivery of the power for which construction is credited under paragraph (c)(18)(i) of this section, including the cost of repairs and other expenses of operating and maintaining lands, buildings, and other property, and other miscellaneous and like expenses not properly includible in other accounts.

(19) *Training costs.* (i) When it is necessary that employees be trained to operate or maintain plant facilities that are being constructed and such facilities are not conventional in nature, or are new to the company's operations, these costs may be capitalized as a component of construction cost.

(ii) Once plant is placed in service, the capitalization of training costs shall cease and subsequent training costs shall be expensed. (See § 1767.17 (d).)

(20) *Studies.* (i) Studies include the costs of studies such as nuclear operational, safety, or seismic studies, or environmental studies mandated by regulatory bodies relative to plant under construction.

(ii) Studies relative to facilities in service shall be charged to Account 183, Preliminary Survey and Investigation Charges.

(d) *Overhead construction costs.* (1) All overhead construction costs, such as engineering, supervision, general office salaries and expenses, construction engineering and supervision performed by

others than the accounting utility, law expenses, insurance, injuries and damages, relief and pensions, taxes and interest, shall be charged to particular jobs or units on the basis of the amounts of such overheads reasonably applicable thereto, to the end that each job or unit shall bear its equitable proportion of such costs and that the entire cost of the unit, both direct and overhead, shall be deducted from the plant accounts as the time the property is retired.

(2) As far as practicable, the determination of payroll charges includible in construction overheads shall be based on time card distributions thereof.

(i) Where this procedure is impractical, special studies shall be made periodically of the time of supervisory employees devoted to construction activities to the end that only such overhead costs as have a definite relation to construction shall be capitalized.

(ii) The addition to direct construction cost of arbitrary percentages or amounts to cover assumed overhead costs is not permitted.

(3) The records supporting the entries for overhead constructions costs shall be so kept as to show:

(i) The total amount of each overhead for each year;

(ii) The nature and amount of each overhead expenditure charged to each construction work order and to each electric plant account; and

(iii) The bases of distribution of such costs.

(e) *Electric plant purchased or sold.* (1) When electric plant constituting an operating unit or system is acquired by purchase, merger, consolidation, liquidation, or otherwise, after the effective date of this system of accounts, the costs of acquisition, including expenses incidental thereto properly includible in electric plant, shall be charged to Account 102, Electric Plant Purchased or Sold.

(2) The accounting for the acquisition shall then be completed as follows:

(i) The original cost of plant, estimated if not known, shall be credited to Account 102, Electric Plant Purchased or Sold, and concurrently charged to the appropriate electric plant in service accounts and to Account 104, Electric Plant Leased to Others; Account 105, Electric Plant Held for Future Use; and Account 107, Construction Work in Progress—Electric, as appropriate.

(ii) The depreciation and amortization applicable to the original cost of the properties purchased shall be charged to Account 102, Electric Plant Purchased or Sold, and concurrently credited to the appropriate account for accumulated provision for depreciation or amortization.

(iii) The cost to the utility of any property includible in Account 121, Nonutility Property, shall be transferred thereto.

(iv) The amount remaining in Account 102, Electric Plant Purchased or Sold, shall then be closed to Account 114, Electric Plant Acquisition Adjustments.

(3) If property acquired in the purchase of an operating unit or system is in such physical condition when acquired that it is necessary to substantially rehabilitate it in order to bring the property up to the standards of the utility, the cost of such work, except replacements, shall be accounted for as a part of the purchase price of the property.

(4) When any property acquired as an operating unit or system includes duplicate or other plant which will be retired by the accounting utility in the reconstruction of the acquired property or its consolidation with previously owned property, the proposed accounting for such property shall be presented to RUS.

(5) In connection with the acquisition of electric plant constituting an operating unit or system, the utility shall procure, if possible, all existing records relating to the property acquired or certified copies thereof, and shall preserve such records in conformity with regulations or practices governing the preservation of records of its own construction.

(6) When electric plant constituting an operating unit or system is sold, conveyed, or transferred to another by sale, merger, consolidation, or otherwise, the book cost of the property sold or transferred to another shall be credited to the appropriate utility plant accounts, including amounts carried in

Account 114, Electric Plant Acquisition Adjustments, and the amounts (estimated if not known) carried with respect thereto in the accounts for accumulated provision for depreciation and amortization and in Account 252, Customer Advances for Construction, shall be charged to such accounts and contra entries made to Account 102, Electric Plant Purchased or Sold. Unless otherwise ordered by RUS, the difference, if any, between:

(i) The net amount of debits and credits, and

(ii) The consideration received for the property (less commissions and other expenses of making the sale) shall be included in Account 421.1, Gain on Disposition of Property, or Account 421.2, Loss on Disposition of Property. (See Account 102, Electric Plant Purchased or Sold.)

NOTE: In cases where existing utilities merge or consolidate because of financial or operating reasons or statutory requirements rather than as a means of transferring title of purchased properties to a new owner, the accounts of the constituent utilities, with the approval of RUS, may be combined. In the event original cost has not been determined, the resulting utility shall proceed to determine such cost as outlined herein.

(f) *Expenditures on leased property.* (1) The cost of substantial initial improvements (including repairs, rearrangements, additions, and betterments) made in the course of preparing for utility service property leased for a period of more than one year, and the cost of subsequent substantial additions, replacements, or betterments to such property, shall be charged to the electric plant account appropriate for the class of property leased.

(i) If the service life of the improvements is terminable by action of the lease, the cost, less net salvage, of the improvements shall be spread over the life of the lease by charges to Account 404, Amortization of Limited-Term Electric Plant.

(ii) If the service life is not terminated by action of the lease but by depreciation proper, the cost of the improvements, less net salvage, shall be accounted for as depreciable plant. The provisions of (1) are applicable to property leased under either capital leases or operating leases.

(2) If improvements made to property leased for a period of more than one year are of relatively minor cost, or if the lease is for a period of not more than one year, the cost of the improvements shall be charged to the account in which the rent is included, either directly or by amortization thereof.

(g) *Land and land rights.* (1) The accounts for land and land rights shall include the cost of land owned in fee by the utility and rights, interests, and privileges held by the utility in land owned by others, such as leaseholds, easements, water and water power rights, diversion rights, submersion rights, rights-of-way, and other like interests in land.

(i) Do not include in the accounts for land and land rights and rights-of-way costs incurred in connection with first clearing and grading of land and rights-of-way and the damage costs associated with the construction and installation of plant.

(ii) Such costs shall be included in the appropriate plant accounts directly benefited.

(2) Where special assessments for public improvements provide for deferred payments, the full amount of the assessments shall be charged to the appropriate land account and the unpaid balance shall be carried in an appropriate liability account.

(i) Interest on unpaid balances shall be charged to the appropriate interest account.

(ii) If any part of the cost of public improvements is included in the general tax levy, the amount thereof shall be charged to the appropriate tax account.

(3) The net profit from the sale of timber, cord wood, sand, gravel, other resources or other property acquired with the rights-of-way or other lands shall be credited to the appropriate plant accounts to which related. Where land is held for a considerable period of time and timber and other natural resources on the land at the time of purchase increase in value, the net profit (after giving effect to the cost of the

natural resources) from the sale of timber or its products or other natural resources shall be credited to the appropriate utility operating income account when such land has been recorded in Account 105, Electric Plant Held for Future Use, or classified as plant in service, otherwise to Account 421, Miscellaneous Nonoperating Income.

(4) Separate entries shall be made for the acquisition, transfer, or retirement of each parcel of land, and each land right (except rights-of-way for distribution lines), or water right, having a life of more than one year.

(i) A record shall be maintained showing the nature of ownership, full legal description, area, map reference, purpose for which used, city, county, and tax district on which situated, from whom purchased or to whom sold, payment given or received, other costs, contract date and number, date of recording of deed, and book and page of record.

(ii) Entries transferring or retiring land or land rights shall refer to the original entry recording its acquisition.

(5) Any difference between the amount received from the sale of land or land rights, less agents' commissions and other costs incident to the sale, and the book cost of such land or rights, shall be included in Account 411.6, Gains from Disposition of Utility Plant, or 411.7, Losses from Disposition of Utility Plant, when such property has been recorded in Account 105, Electric Plant Held for Future Use, otherwise to Account 421.1, Gain on Disposition of Property, or 421.2, Loss on Disposition of Property, as appropriate, unless a reserve therefor has been authorized and provided. Appropriate adjustments of the accounts shall be made with respect to any structures or improvements located on land sold.

(6) The cost of buildings and other improvements (other than public improvements) shall not be included in the land accounts. If, at the time of acquisition of an interest in land, such interest extends to buildings or other improvements (other than public improvements) which are then devoted to utility operations, the land and improvements shall be separately appraised and a cost allocated to land and buildings or improvements on the basis of the appraisals. If the improvements are removed or wrecked without being used in operations, the cost of removing or wrecking shall be charged and the salvage credited to the account in which the cost of land is recorded.

(7) When the purchase of land for electric operations requires the purchase of more land than needed for such purposes, the charge to the specific land account shall be based upon the cost of the land purchased, less the fair market value of that portion of the land which is not to be used in utility operations. The portion of the cost measured by the fair market value of the land not to be used shall be included in Account 105, Electric Plant Held for Future Use, or Account 121, Nonutility Property, as appropriate.

(8) Provisions shall be made for amortizing amounts carried in the accounts for limited-term interest in land so as to apportion equitably the cost of each interest over the life thereof. (See Account 111, Accumulated Provision for Amortization of Electric Utility Plant, and Account 404, Amortization of Limited-Term Electric Plant.)

(9) The items of cost to be included in the accounts for land and land rights are as follows:

(i) Bulkheads, buried, not requiring maintenance or replacement;

(ii) First cost of acquisition including mortgages and other liens assumed (but not subsequent interest thereon);

(iii) Condemnation proceedings, including court and counsel costs;

(iv) Consents and abutting damages;

(v) Conveyancers' and notaries' fees;

(vi) Fees, commissions, and salaries to brokers, agents, and other in connection with the acquisition of the land or land rights;

(vii) Leases, cost of voiding upon purchase to secure possession of land;

(viii) Removing, relocating, or reconstructing property of others, such as buildings, highways, railroads, bridges, cemeteries, churches, telephone and power lines, etc., in order to acquire quiet possession;

(ix) Retaining walls unless identified with structures;

(x) Special assessments levied by public authorities for public improvements on the basis of benefits for new roads, new bridges, new sewers, new curbing, new pavements, and other public improvements, but not taxes levied to provide for the maintenance of such improvements;

(xi) Surveys in connection with the acquisition, but not amounts paid for topographical surveys and maps where such costs are attributable to structures or plant equipment erected or to be erected or installed on such land;

(xii) Taxes assumed, accrued to date of transfer of title;

(xiii) Title, examining, clearing, insuring, and registering in connection with the acquisition and defending against claims relating to the period prior to the acquisition;

(xiv) Appraisals prior to closing title;

(xv) Cost of dealing with distributees or legatees residing outside of the state or county, such as recording power of attorney, recording will or exemplification of will, recording satisfaction of state tax;

(xvi) Filing satisfaction of mortgage;

(xvii) Documentary stamps;

(xviii) Photographs of property at acquisition;

(xix) Fees and expenses incurred in the acquisition of water rights and grants;

(xx) Cost of fill to extend bulkhead line over land under water, where riparian rights are held, which is not occasioned by the erection of a structure;

(xxi) Sidewalks and curbs constructed by the utility on public property; and

(xxii) Labor and expenses in connection with securing rights of way, where performed by company employees and company agents.

(h) *Structures and improvements.* (1) The accounts for structures and improvements shall include the cost of all buildings and facilities to house, support, or safeguard property or persons, including all fixtures permanently attached to and made a part of buildings and which cannot be removed therefrom without cutting into the walls, ceilings, or floors, or without in some way impairing the buildings, and improvements of a permanent character on or to land.

(2) Also include those costs incurred in connection with the first clearing and grading of land and rights-of-way and the damage costs associated with construction and installation of plant.

(3) The cost of specially provided foundations not intended to outlast the machinery or apparatus for which provided, and the cost of angle irons, and castings installed at the base of an item of equipment, shall be charged to the same account as the cost of the machinery, apparatus, or equipment.

(4) Minor buildings and structures, such as valve towers, patrolmen's towers, telephone stations, fish and wildlife, and recreation facilities which are used directly in connection with or form a part of a reservoir, dam or waterway shall be considered a part of the facility in connection with which constructed or operated and the cost thereof accounted for accordingly.

(5) Where furnaces and boilers are used primarily for furnishing steam for some particular department and only incidentally for furnishing steam for heating a building and operating the equipment therein, the entire cost of such furnaces and boilers shall be charged to the appropriate plant account, and no part to the building account.

(6) Where the structure of a dam forms also the foundation of the power plant building, such foundation shall be considered a part of the dam.

(7) The cost of disposing of materials excavated in connection with construction of structures shall be considered as a part of the cost of such work, except when such material is used for filling, the cost of loading, hauling, and dumping shall be equitably apportioned between the work in connection with which the removal occurs and the work in connection with which the material is used; and when such material is sold, the net amount realized from such sales shall be credited to the work in connection with which the removal occurs. If the amount realized from the sale of excavated materials exceeds the removal costs and the costs in connection with the sale, the excess shall be credited to the land account in which the site is carried.

(8) Lighting or other fixtures temporarily attached to building for purposes

of display or demonstration shall not be included in the cost of the building but in the appropriate equipment account.

(9) The items of cost to be included in the accounts for structures and improvements are as follows:

(i) Architects' plans and specifications including supervision;

(ii) Ash pits (when located within the building);

(iii) Athletic field structures and improvements;.

(iv) Boilers, furnaces, piping, wiring, fixtures, and machinery for heating, lighting, signaling, ventilating, and air conditioning systems, plumbing, vacuum cleaning systems, incinerator and smoke pipe, flues, etc;

(v) Bulkheads, including dredging, riprap fill, piling, decking, concrete, fenders, etc., when exposed and subject to maintenance and replacement;

(vi) Chimneys;

(vii) Coal bins and bunkers;

(viii) Commissions and fees to brokers, agents, architects and others;

(ix) Conduit (not to be removed) with its contents;

(x) Damages to abutting property during construction;

(xi) Docks;

(xii) Door checks and door stops;

(xiii) Drainage and sewerage systems;

(xiv) Elevators, cranes, hoists, etc., and the machinery for operating them;

(xv) Excavation, including shoring, bracing, bridging, refill and disposal of excess excavated material, cofferdams around foundation, pumping water from cofferdams during construction and test borings;

(xvi) Fences and fence curbs (not including protective fences isolating items of equipment, which shall be charged to the appropriate equipment accounts);

(xvii) Fire protection systems when forming a part of a structure;

(xviii) Flagpole;

(xix) Floor covering (permanently attached);

(xx) Foundations and piers for machinery, constructed as a permanent part of a building or other item listed herein;

(xxi) Grading and clearing when directly occasioned by the building of a structure;

(xxii) Intrasite communication system, poles, pole fixtures, wires, and cable;

(xxiii) Landscaping, lawns, shrubbery, etc.;

(xxiv) Leases, voiding upon purchase to secure possession of structures;

(xxv) Leased property, expenditures on;

(xxvi) Lighting fixtures and outside lighting system;

(xxvii) Mailchutes when part of a building;

(xxviii) Marquee, permanently attached to the building;

(xxix) Painting, first cost;

(xxx) Permanent paving, concrete, brick, flagstone, asphalt, etc., within the property lines;

(xxxi) Partitions, including movable;

(xxxii) Permits and privileges;

(xxxiii) Platforms, railings and gratings when constructed as a part of a structure;

(xxxiv) Power boards for services to a building;

(xxxv) Refrigerating systems for general use;

(xxxvi) Retaining walls except when identified with land;

(xxxvii) Roadways, railroads, bridges, and trestles intrasite except railroads provided for in equipment accounts;

(xxxviii) Roofs;

(xxxix) Scales, connected to and forming a part of a structure;

(xl) Screens;

(xli) Sewer systems, for general use;

(xlii) Sidewalks, culverts, curbs and streets constructed by the utility on its property;

(xliii) Sprinkling systems;

(xliv) Sump pumps and pits;

(xlv) Stacks—brick, steel, or concrete, when set on foundation forming part of general foundation and steelwork of a building;

(xlvi) Steel inspection during construction;

(xlvii) Storage facilities constituting a part of a building;

(xlviii) Storm doors and windows;

(xlix) Subways, areaways, and tunnels, directly connected to and forming part of a structure;

(l) Tanks, constructed as part of a building or as a distinct structural unit;

(li) Temporary heating during construction (net cost);

(lii) Temporary water connection during construction (net cost);

(liii) Temporary shanties and other facilities used during construction (net cost);

(liv) Topographical maps;

(lv) Tunnels, intake and discharge, when constructed as part of a structure, including sluice gates, and those constructed to house mains;

(lvi) Vaults constructed as part of a building;

(lvii) Watchmen's sheds and clock systems (net cost when used during construction only);

(lviii) Water basins or reservoirs;

(lix) Water front improvements;

(lx) Water meters and supply system for a building or for general company purposes;

(lxi) Water supply piping, hydrants, and wells;

(lxii) Wharves;

(lxiii) Window shades and ventilators;

(lxiv) Yard drainage system;

(lxv) Yard lighting system; and

(lxvi) Yard surfacing, gravel, concrete, or oil (First cost only).

NOTE: Structures and improvements accounts shall be credited with the cost of coal bunkers, stacks, foundations, subways, and tunnels, the use of which has terminated with the removal of the equipment with which they are associated even though they have not been physically removed.

(i) *Equipment.* (1) The cost of equipment chargeable to the electric plant accounts, unless otherwise indicated in the text of an equipment account, includes the net purchase price thereof, sales taxes, investigation and inspection expenses necessary to such purchase, expenses of transportation when borne by the utility, labor employed, materials, and supplies consumed, and expenses incurred by the utility in unloading and placing the equipment in readiness to operate.

(2) Also include those costs incurred in connection with the first clearing and grading of land and rights-of-way and the damage costs associated with construction and installation of plant.

(3) Exclude from equipment accounts hand and other portable tools, which are likely to be lost or stolen or which have relatively small value (for example, $500 or less) or short life, unless the correctness of the accounting therefor as electric plant is verified by current inventories.

(i) Special tools acquired and included in the purchase price of equipment shall be included in the appropriate plant accounts.

(ii) Portable drills and similar tool equipment when used in connection with the operation and maintenance of a particular plan or department, such as production, transmission, or distribution or in ''stores'', shall be charged to the plant accounts appropriate for their use.

(4) The equipment accounts shall include angle irons and similar items which are installed at the base of an item of equipment, but piers and foundations which are designed to be as permanent as the buildings which house the equipment, or which are constructed as a part of the building and which cannot be removed without cutting into the walls, ceilings, or floors or, without in some way impairing the building, shall be included in the building accounts.

(5) The equipment accounts shall include the necessary costs of testing or running a plant or parts thereof during an experimental or test period prior to such plant becoming ready for or placed in service.

(i) The utility shall furnish RUS with full particulars of and justification for any test or experimental run extending beyond a period of 120 days for nuclear plant, and a period of 90 days for all other plant.

(ii) Such particulars shall include a detailed operational and downtime log showing days of production, gross kilowatts generated by hourly increments, types, and periods of outages by hours with explanation thereof, beginning with the first date the equipment was either tested or synchronized on the line to the end of the test period.

(6) The cost of efficiency or other tests made subsequent to the date equipment becomes available for service shall be charged to the appropriate expense accounts, except that tests to determine whether equipment meets the specifications and requirements as

to efficiency, or performance guaranteed by manufacturers, made after operations have commenced and within the period specified in the agreement or contract of purchase, may be charged to the appropriate electric plant accounts.

(j) *Additions and retirements of electric plant.* (1) For the purpose of avoiding undue refinement in accounting for additions to and retirements and replacements of electric plant, all property shall be considered as consisting of retirement units and minor items of property.

(2) The addition and retirement of retirement units shall be accounted for as follows:

(i) When a retirement unit is added to electric plant, the cost thereof shall be added to the appropriate electric plant account, except that when units are acquired in the acquisition of any electric plant constituting an operating system, they shall be accounted for as provided in paragraph (e) of this section.

(ii) When a retirement unit is retired from electric plant, with or without replacement, the book cost thereof shall be credited to the electric plant account in which it is included, determined in the manner set forth in Item in paragraph (j)(4) of this section. If the retirement unit is of a depreciable class, the book cost of the unit retired and credited to electric plant shall be charged to the accumulated provision for depreciation applicable to such property. The cost of removal and the salvage shall be charged or credited, as appropriate, to such depreciation account.

(3) The addition and retirement of minor items of property shall be accounted for as follows:

(i) When a minor item of property which did not previously exist is added to plant, the cost thereof shall be accounted for in the same manner as for the addition of a retirement unit, as set forth in Item in paragraph (j)(2)(i) of this section, if a substantial addition results, otherwise the charge shall be to the appropriate maintenance expense account.

(ii) When a minor item of property is retired and not replaced, the book cost thereof shall be credited to the electric plant account in which it is included; and, in the event the minor item is a part of depreciable plant, the account for accumulated provision for depreciation shall be charged with the book cost and cost of removal and credited with the salvage. If, however, the book cost of the minor item retired and not replaced has been or will be accounted for by its inclusion in the retirement unit of which it is a part when such unit is retired, no separate credit to the property account is required when such minor item is retired.

(iii) When a minor item of depreciable property is replaced independently of the retirement unit of which it is a part, the cost of replacement shall be charged to the maintenance account appropriate for the item, except that if the replacement effects a substantial betterment (the primary aim of which is to make the property affected more useful, more efficient, of greater durability, or of greater capacity), the excess cost of the replacement over the estimated cost at current prices of replacing without betterment shall be charged to the appropriate electric plant accounts.

(4) The book cost of electric plant retired shall be the amount at which such property is included in the electric plant accounts, including all components of construction costs. The book cost shall be determined from the utility's records and if this cannot be done, it shall be estimated. When it is impracticable to determine the book cost of each unit, due to the relatively large number or small cost thereof, an appropriate average book cost of the units with due allowance for any differences in size and character, shall be used as the book cost of the units retired.

(5) The book cost of land retired shall be credited to the appropriate land accounts. If the land is sold, the difference between the book cost (less any accumulated provision for depreciation or amortization therefore which has been authorized and provided) and the sale price of the land (less commissions and other expenses of making the sale) shall be recorded in Account 411.6, Gains from Disposition of Utility Plant, or Account 411.7, Losses from Disposition of Utility Plant, when the

property has been recorded in Account 105, Electric Plant Held for Future Use, otherwise to Accounts 421.1, Gain on Disposition of Property, or 421.2, Loss on Disposition of Property, as appropriate. If the land is not used in utility service but is retained by the utility, the book cost shall be charged to Account 105, Electric Plant Held for Future Use, or Account 121, Nonutility Property, as appropriate.

(6) The book cost less net salvage of depreciable electric plant retired shall be charged in its entirety to Account 108, Accumulated Provision for Depreciation of Electric Utility Plant in Service. Any amounts which, by approval or order of RUS, are charged to Account 182.1, Extraordinary Property Losses, shall be credited to Account 108.

(7) The accounting for the retirement of amounts included in Account 302, Franchises and Consents, and Account 303, Miscellaneous Intangible Plant, and the items of limited-term interest in land included in the accounts for land and land rights, shall be as provided for in the text of Account 111, Accumulated Provision for Amortization of Electric Utility Plant in Service; Account 404, Amortization of Limited-Term Electric Plant; and Account 405, Amortization of Other Electric Plant.

(k) *Work order and property record system required.* (1) Each utility shall record all construction and retirements of electric plant by means of work orders or job orders. Separate work orders may be opened for additions to and retirements of electric plant or the retirements may be included with the construction work order, provided, however, that all items relating to the retirements shall be kept separate from those relating to construction and provided, further, that any maintenance costs involved in the work shall likewise be segregated.

(2) Each utility shall keep its work order system so as to show the nature of each addition to or retirement of electric plant, the total cost thereof, the source or sources of costs, and the electric plant account or accounts to which charged or credited. Work orders covering jobs of short duration may be cleared monthly.

(3) Each utility shall maintain records in which, for each plant account, the amounts of the annual additions and retirements are classified so as to show the number and cost of the various record units or retirement units.

(l) *Transfers of property.* When property is transferred from one electric plant account to another, from one utility department to another, such as from electric to gas, from one operating division or area to another, to or from Account 101, Electric Plant in Service; Account 104, Electric Plant Leased to Others; Account 105, Electric Plant Held for Future Use, and Account 121, Nonutility Property, the transfer shall be recorded by transferring the original cost thereof from the one account, department, or location to the other. Any related amounts carried in the accounts for accumulated provision for depreciation or amortization shall be transferred in accordance with the segregation of such accounts.

(m) *Common utility plant.* (1) If the utility is engaged in more than one utility service, such as electric, gas, and water, and any of its utility plant is used in common for several utility services or for other purposes to such an extent and in such manner that it is impracticable to segregate it by utility services currently in the accounts, such property, with the approval of RUS, may be designated and classified as ''common utility plant.''

(2) The book amount of utility plant designated as common plant shall be included in Account 118, Other Utility Plant, and if applicable in part to the electric department, shall be segregated and accounted for in subaccounts as electric plant is accounted for in Accounts 101 to 107, inclusive, and electric plant adjustments in Account 116, Other Electric Plant Adjustments; any amounts classifiable as common plant acquisition adjustments or common plant adjustments shall be subject to disposition as provided in Paragraphs C and B of Accounts 114 and 116, respectively, for amounts classified in those accounts. The original cost of common utility plant in service shall be classified according to the detailed utility plant accounts appropriate for the property.

(3) The utility shall be prepared to show, at any time, and to report to RUS annually, or more frequently, if required, and by utility plant accounts (301 to 399) the book cost of common utility plant, the allocation of such cost to the respective departments using the common utility plant, and the basis of the allocation.

(4) The accumulated provision for depreciation and amortization of the utility shall be segregated so as to show the amount applicable to the property classified as common utility plant.

(5) The expenses of operation, maintenance, rents, depreciation and amortization of common utility plant shall be recorded in the accounts prescribed herein, but designated as common expenses, and the allocation of such expenses to the departments using the common utility plant shall be supported in such manner as to reflect readily the basis of allocation used.

(n) *Transmission and distribution plant.* For the purpose of this system of accounts:

(1) *Transmission system* is all land, conversion structures, and equipment employed at a primary source of supply (i.e. generating station, or point of receipt in the case of purchased power) to change the voltage or frequency of electricity for the purpose of its more efficient or convenient transmission; all land, structures, lines, switching and conversion stations, high tension apparatus, and their control and protective equipment between a generating or receiving point and the entrance to a distribution center or wholesale point; and all lines and equipment whose primary purpose is to augment, integrate or tie together the sources of power supply.

(2) *Distribution system* is all land, structures, conversion equipment, lines, line transformers, and other facilities employed between the primary source of supply (i.e. generating station, or point of receipt in the case of purchased power) and of delivery to customers, which are not includible in transmission system, as defined in Item in paragraph (n)(1) of this section, whether or not such land, structures, and facilities are operated as part of a transmission system or as part of a distribution system.

NOTE: Stations which change electricity from transmission to distribution voltage shall be classified as distribution stations.

(3) Where poles or towers support both transmission and distribution conductors, the poles, towers, anchors, guys, and rights-of-way shall be classified as transmission system. The conductors, cross-arms, braces, grounds, tiewire, and insulators shall be classified as transmission or distribution facilities, according to the purpose for which used.

(4) Where underground conduit contains both transmission and distribution conductors, the underground conduit and right-of-way shall be classified as distribution system. The conductors shall be classified as transmission or distribution facilities according to the purpose for which used.

(5) Land (other than rights-of-way) and structures used jointly for transmission and distribution purposes shall be classified as transmission or distribution according to the major use thereof.

(o) *Hydraulic production plant.* For purpose of this system of accounts hydraulic production plant is all land and land rights, structures and improvements used in connection with hydraulic power generation, reservoirs, dams and waterways, water wheels, turbines, generators, accessory electric equipment, roads, railroads, and bridges and structures and improvements used in connection with fish and wildlife, and recreation.

(p) *Nuclear fuel records required.* Each utility shall keep all the necessary records to support the entries to the various nuclear fuel plant accounts classified under ''Assets and Other Debits,'' Utility Plant Accounts 120.1 through 120.5, inclusive; Account 518, Nuclear Fuel Expense; and Account 157, Nuclear Materials Held for Sale. These records shall be so kept as to readily furnish the basis of the computation of the net nuclear fuel costs.

§ 1767.17 Operating expense instructions.

(a) *Supervision and engineering.* The supervision and engineering includible in the operating expense accounts shall consist of the salary, employee pensions and benefits, social security and

other payroll taxes, injuries and damages, and other expenses of superintendents, engineers, clerks, other employees, and consultants engaged in supervising and directing the operation and maintenance of each utility function. Whenever allocations are necessary in order to arrive at the amount to be included in any account, the method and basis of allocation shall be reflected by underlying records.

(1) Labor items:

(i) Special tests to determine efficiency of equipment operation;

(ii) Preparing or reviewing budgets, estimates, and drawings relating to operation or maintenance for departmental approval;

(iii) Preparing instructions for operations and maintenance activities;

(iv) Reviewing and analyzing operating results;

(v) Establishing organizational setup of departments and executing changes therein;

(vi) Formulating and reviewing routines of departments and executing changes therein;

(vii) General training and instruction of employees by supervisors whose pay is chargeable hereto. Specific instructions and training in a particular type of work is chargeable to the appropriate functional account (See paragraph (c)(19) of this section); and

(viii) Secretarial work for supervisory personnel, but not general clerical and stenographic work chargeable to other accounts.

(2) Expense items:

(i) Employee pensions and benefits;

(ii) Social security and other payroll taxes;

(iii) Injuries and damages;

(iv) Consultants' fees and expenses; and

(v) Meals, traveling, and incidental expenses.

(b) *Maintenance.* (1) The cost of maintenance chargeable to the various operating expense and clearing accounts includes labor, employee pensions and benefits, social security and other payroll taxes, injuries and damages, materials, overheads, and other expenses incurred in maintenance work. A list of work operations applicable generally to utility plant is included in this paragraph (b). Other work operations applicable to specific classes of plant are listed in functional maintenance expense accounts.

(2) Materials recovered in connection with the maintenance of property shall be credited to the same account to which the maintenance cost was charged.

(3) If the book cost of any property is carried in Account 102, Electric Plant Purchased or Sold, the cost of maintaining such property shall be charged to the accounts for maintenance of property of the same class and use, the book cost of which is carried in other electric plant in service accounts. Maintenance of property leased from others shall be treated as provided in paragraph (c) of this section.

(4) Items:

(i) Direct field supervision of maintenance;

(ii) Inspecting, testing, and reporting on condition of plant specifically to determine the need for repairs, replacements, rearrangements, and changes and inspecting and testing the adequacy of repairs which have been made;

(iii) Work performed specifically for the purpose of preventing failure, restoring serviceability or maintaining life of plant;

(iv) Rearranging and changing the location of plant not retired;

(v) Repairing for reuse materials recovered from plant;

(vi) Testing for, locating, and clearing trouble;

(vii) Net cost of installing, maintaining, and removing temporary facilities to prevent interruptions in service; and

(viii) Replacing or adding minor items of plant which do not constitute a retirement unit.

(c) *Rents.* (1) The rent expense accounts provided under the several functional groups of expense accounts shall include all rents, including taxes paid by the lessee on leased property, for property used in utility operations, except minor amounts paid for occasional or infrequent use of any property or equipment and all amounts paid for use of equipment that, if owned, would be includible in plant Accounts 391 to 398 inclusive, which shall be treated as an expense item and included in the appropriate function account and rents

which are chargeable to clearing accounts, and distributed therefrom to the appropriate account.

(2) If rents cover property used for more than one function such as production and transmission, or by more than one department, the rents shall be apportioned to the appropriate rent expense or clearing accounts of each department on an actual, or if necessary, an estimated basis.

(3) When a portion of property or equipment rented from others for use in connection with utility operations is subleased, the revenue derived from such subleasing shall be credited to the rent revenue account in operating revenues; provided, however, that in case the rent was charged to a clearing account, amounts received from subleasing the property shall be credited to such clearing account.

(4) The cost, when incurred by the lessee, of operating and maintaining leased property, shall be charged to the accounts appropriate for the expense if the property were owned.

(5) The cost incurred by the lessee of additions and replacements to electric plant leased from others shall be account for as provided in §1767.16 (f).

(d) *Training costs.* (1) When it is necessary that employees be trained to specifically operate or maintain plant facilities that are being constructed, the related costs shall be accounted for as a current operating and maintenance expense.

(2) These expenses shall be charged to the appropriate functional accounts currently as they are incurred.

(3) When the training costs involved relate to facilities which are not conventional in nature, or are new to the company's operations, see §1767.16 (c)(19), for the accounting.

[58 FR 59825, Nov. 10, 1993, as amended at 62 FR 42290, Aug. 6, 1997]

§1767.18 Assets and other debits.

The asset and other debits accounts identified in this section shall be used by all RUS borrowers.

ASSETS AND OTHER DEBITS

Utility Plant

101 Electric Plant in Service
101.1 Property Under Capital Leases
102 Electric Plant Purchased or Sold
103 Experimental Electric Plant Unclassified
104 Electric Plant Leased to Others
105 Electric Plant Held for Future Use
106 Completed Construction not Classified—Electric
107 Construction Work in Progress—Electric
107.1 Construction Work in Progress—Contract
107.2 Construction Work in Progress—Force Account
107.3 Construction Work in Progress—Special Equipment
108 Accumulated Provision for Depreciation of Electric Utility Plant
108.1 Accumulated Provision for Depreciation of Steam Production Plant
108.2 Accumulated Provision for Depreciation of Nuclear Production Plant
108.3 Accumulated Provision for Depreciation of Hydraulic Production Plant
108.4 Accumulated Provision for Depreciation of Other Production Plant
108.5 Accumulated Provision for Depreciation of Transmission Plant
108.6 Accumulated Provision for Depreciation of Distribution Plant
108.7 Accumulated Provision for Depreciation of General Plant
108.8 Retirement Work in Progress
109 [Reserved]
110 [Reserved]
111 Accumulated Provision for Amortization of Electric Utility Plant
112 [Reserved]
113 [Reserved]
114 Electric Plant Acquisition Adjustments
115 Accumulated Provision for Amortization of Electric Plant Acquisition Adjustments
116 Other Electric Plant Adjustments
118 Other Utility Plant
119 Accumulated Provision for Depreciation and Amortization of Other Utility Plant
120.1 Nuclear Fuel in Process of Refinement, Conversion, Enrichment, and Fabrication
120.2 Nuclear Fuel Materials and Assemblies—Stock Account
120.3 Nuclear Fuel Assemblies in Reactor
120.4 Spent Nuclear Fuel
120.5 Accumulated Provision for Amortization of Nuclear Fuel Assemblies
120.6 Nuclear Fuel Under Capital Leases

Other Property and Investments

121 Nonutility Property
122 Accumulated Provision for Depreciation and Amortization of Nonutility Property
123 Investment in Associated Companies
123.1 Patronage Capital from Associated Cooperatives
123.3 Investment in Associated Organizations—Federal Economic Development Loans

123.4 Investment in Associated Organizations—Non-Federal Economic Development Loans
123.11 Investment in Subsidiary Companies
123.21 Subscriptions to Capital Term Certificates—Supplemental Financing
123.22 Investments in Capital Term Certificates—Supplemental Financing
123.23 Other Investments in Associated Organizations
124 Other Investments
124.1 Other Investments—Federal Economic Development Loans
124.2 Other Investments—Non-Federal Economic Development Loans
125 Sinking Funds
126 Depreciation Fund
128 Other Special Funds

Current and Accrued Assets

131 Cash
131.1 Cash—General
131.2 Cash—Construction Fund—Trustee
131.3 Cash—Installation Loan and Collection Fund
131.4 Transfer of Cash
131.12 Cash—General—Economic Development Loan Funds
131.13 Cash—General—Economic Development Grant Funds
131.14 Cash—General—Economic Development Non-Federal Revolving Funds
132 Interest Special Deposits
133 Dividend Special Deposits
134 Other Special Deposits
135 Working Funds
136 Temporary Cash Investments
141 Notes Receivable
141.1 Accumulated Provision for Uncollectible Notes—Credit
142 Customer Accounts Receivable
142.1 Customer Accounts Receivable—Electric
142.2 Customer Accounts Receivable—Other
143 Other Accounts Receivable
144 Accumulated Provision for Uncollectible Accounts—Credit
144.1 Accumulated Provision for Uncollectible Customer Accounts—Credit
144.2 Accumulated Provision for Uncollectible Merchandising Accounts—Credit
144.3 Accumulated Provision for Uncollectible Accounts, Officers and Employees—Credit
144.4 Accumulated Provision for Other Uncollectible Accounts—Credit 145 Notes Receivable from Associated Companies
145 Notes Receivable from Associated Companies
146 Accounts Receivable from Associated Companies
151 Fuel Stock
152 Fuel Stock Expenses Undistributed
153 Residuals
154 Plant Materials and Operating Supplies
155 Merchandise
156 Other Materials and Supplies
157 Nuclear Materials Held for Sale
158.1 Allowance Inventory
158.2 Allowances Withheld
163 Stores Expense Undistributed
165 Prepayments
165.1 Prepayments—Insurance
165.2 Other Prepayments
171 Interest and Dividends Receivable
172 Rents Receivable
173 Accrued Utility Revenues
174 Miscellaneous Current and Accrued Assets

Deferred Debits

181 Unamortized Debt Expense
182.1 Extraordinary Property Losses
182.2 Unrecovered Plant and Regulatory Study Costs
182.3 Other Regulatory Assets
183 Preliminary Survey and Investigation Charges
184 Clearing Accounts
184.1 Transportation Expense—Clearing
184.2 Clearing Accounts—Other
185 Temporary Facilities
186 Miscellaneous Deferred Debits
187 Deferred Losses from Disposition of Utility Plant
188 Research, Development, and Demonstration Expenditures
189 Unamortized Loss on Reacquired Debt
190 Accumulated Deferred Income Taxes

ASSETS AND OTHER DEBITS

Utility Plant

101 Electric Plant in Service

A. This account shall include the original cost of electric plant, included in Accounts 301 to 399, prescribed herein, owned and used by the utility in its electric utility operations, and having an expectation of life in service of more than one year from date of installation, including such property owned by the utility but held by nominees.

B. (See also Account 106 for unclassified construction costs of completed plant actually in service.)

C. The cost of additions to and betterments of property leased from others, which are includible in this account, shall be recorded in subdivisions separate and distinct from those relating to owned property. (See § 1767.16 (f).)

101.1 Property Under Capital Leases

A. This account shall include the amount recorded under capital leases

for plant leased from others and used by the utility in its utility operations.

B. The electric property included in this account shall be classified separately according to the detailed accounts (301 to 399) prescribed for electric plant in service.

C. Records shall be maintained with respect to each capital lease reflection: (1) name of lessor, (2) basic details of lease, (3) terminal date, (4) original cost or fair market value of property leased, (5) future minimum lease payments, (6) executory costs, (7) present value of minimum lease payments, (8) the amount representing interest and the interest rate used, and (9) expenses paid.

102 Electric Plant Purchased or Sold

A. This account shall be charged with the cost of electric plant acquired as an operating unit or system by purchase, merger, consolidation liquidation, or otherwise, and shall be credited with the selling price of like property transferred to others pending the distribution to appropriate accounts in accordance with §1767.16 (e).

B. Within 6 months from the date of acquisition or sale of property recorded herein, the borrower shall file with RUS the proposed journal entries to clear from this account the amounts recorded herein.

103 Experimental Electric Plant Unclassified

A. This account shall include the cost of electric plant which was constructed as a research, development, and demonstration plant under the provisions of Paragraph C, Account 107, Construction Work in Progress—Electric, and due to the nature of the plant, it is desirous to operate it for a period of time in an experimental status.

B. Amounts in this account shall be transferred to Account 101, Electric Plant in Service, or Account 121, Nonutility Property, as appropriate when the project is no longer considered as experimental.

C. The depreciation on property in this account shall be charged to Account 403, Depreciation Expense, and credited to Account 108, Accumulated Provision for Depreciation of Electric Utility Plant. The amounts herein shall be depreciated over a period which would correspond to the estimated useful life of the relevant project considering the characteristics involved. However, when projects are transferred to Account 101, Electric Plant in Service, a new depreciation rate based upon the remaining service life and undepreciated amounts, will be established.

D. Records shall be maintained with respect to each unit of experiment so that full details may be obtained as to the cost, depreciation, and the experimental status.

E. Should it be determined that experimental plant recorded in this account will fail to satisfactorily perform its function, the costs thereof shall be accounted for as directed or authorized by RUS.

104 Electric Plant Leased to Others

A. This account shall include the original cost of electric plant owned by the utility, but leased to others as operating units or systems, where the lessee has exclusive possession.

B. The property included in this account shall be classified according to the detailed accounts (301 to 399) prescribed for electric plant in service and this account shall be maintained in such detail as though the property were used by the owner in its utility operations.

105 Electric Plant Held for Future Use

A. This account shall include the original cost of electric plant (except land and land rights) owned and held for future use in electric service under a definite plan for such use, to include: (1) Property acquired (except land and land rights) but never used by the utility in electric service, but held for such service in the future under a definite plan, and (2) property (except land and land rights) previously used by the utility in service but retired from such service and held pending its reuse in the future, under a definite plan, in electric service.

B. This account shall also include the original cost of land and land rights owned and held for future use in electric service under a plan for such use, to include land and land rights: (1) Acquired but never used by the utility in

electric service, but held for such service in the future under a plan, and (2) previously held by the utility in service, but retired from such service and held pending its reuse in the future under a plan, in electric service. (See § 1767.16 (g).)

C. In the event that property recorded in this account shall no longer be needed or appropriate for future utility operations, the borrower shall notify RUS of such condition and request approval of journal entries to remove such property from this account.

D. Gains or losses from the sale of land and land rights or other disposition of such property previously recorded in this account and not placed in utility service shall be recorded directly in Accounts 411.6 or 411.7, as appropriate, except when determined to be significant by RUS. Upon such a determination, the amounts shall be transferred to Account 256, Deferred Gains from Disposition of Utility Plant, or Account 187, Deferred Losses from Disposition of Utility Plant, and amortized to Account 411.6, Gains from Disposition of Utility Plant, or Account 411.7, Losses from Disposition of Utility Plant, as appropriate.

E. The property included in this account shall be classified according to the detail accounts (301 to 399) prescribed for electric plant in service and the account shall be maintained in such detail as though the property were in service.

NOTE: Materials and supplies, meters and transformers held in reserve, and normal spare capacity of plant in service shall not be included in this account.

106 Completed Construction not Classified—Electric

At the end of the year or such other date as a balance sheet may be required by RUS, this account shall include the total of the balances of work orders for electric plant which has been completed and placed in service but which work orders have not been classified for transfer to the detailed electric plant accounts.

NOTE: For the purpose of reporting to RUS, the classification of electric plant in service by accounts is required, the utility shall also report the balance in this account tentatively classified as accurately as practicable according to prescribed account classifications. The purpose of this provision is to avoid any significant omissions in reported amounts of electric plant in service.

107 Construction Work in Progress—Electric

A. This account shall include the total of the balances of work orders for electric plant in process of construction.

B. Work orders shall be cleared from this account as soon as practicable, after completion of the job. Further, if a project, such as a hydroelectric project, a steam station, or a transmission line, is designed to consist of two or more units or circuits which may be placed in service at different dates, any expenditures which are common to and which will be used in the operation of the project as a whole shall be included in electric plant in service upon the completion and the readiness for service of the first unit. Any expenditures which are identified exclusively with units of property not yet in service shall be included in this account.

C. Expenditures on research, development, and demonstration projects for construction of utility facilities are to be included in a separate subdivision in this account. Records must be maintained to show separately each project along with complete detail of the nature and purpose of the research, development, and demonstration project together with the related costs.

D. Account 107 shall be subaccounted as follows:

107.1 Construction Work in Progress—Contract
107.2 Construction Work in Progress—Force Account
107.3 Construction Work in Progress—Special Equipment

108 Accumulated Provision for Depreciation of Electric Utility Plant

A. This account shall be credited with the following:

1. Amounts charged to Account 403, Depreciation Expense, or to clearing accounts for current depreciation expense for electric plant in service.

2. Amounts charged to Account 421, Miscellaneous Nonoperating Income,

for depreciation expense on property included in Account 105, Electric Plant Held for Future Use. Include, also, the balance of accumulated provision for depreciation on property when transferred to Account 105, Electric Plant Held for Future Use, from other property accounts. Normally, Account 108 will not be used for current depreciation provision because, as provided herein, the service life during which depreciation is computed commences with the date property is includible in electric plant in service; however, if special circumstances indicate the propriety of current accruals for depreciation, such charges shall be made to Account 421, Miscellaneous Nonoperating Income.

3. Amounts charged to Account 413, Expenses of Electric Plant Leased to Others, for electric plant included in Account 104, Electric Plant Leased to Others.

4. Amounts charged to Account 416, Costs and Expenses of Merchandising, Jobbing, and Contract Work, or to clearing accounts for current depreciation expense.

5. Amounts of depreciation applicable to electric properties acquired as operating units or systems. (See §1767.16 (e).)

6. Amounts charged to Account 182.1, Extraordinary Property Losses, when authorized by RUS.

7. Amounts of depreciation applicable to electric plant donated to the utility.

The utility shall maintain separate subaccounts for depreciation applicable to electric plant in service, electric plant leased to others, and electric plant held for future use.)

B. At the time of retirement of depreciable electric utility plant, this account shall be charged with the book cost of the property retired and the cost of removal and shall be credited with the salvage value and any other amounts recovered, such as insurance. When retirement, costs of removal and salvage are entered originally in retirement work orders, the net total of such work orders may be included in a separate subaccount hereunder. Upon completion of the work order, the proper distribution to subdivisions of this account shall be made as provided in the following paragraph.

C. Account 108 shall be subaccounted as follows:

108.1 Accumulated Provision for Depreciation of Steam Production Plant
108.2 Accumulated Provision for Depreciation of Nuclear Production Plant
108.3 Accumulated Provision for Depreciation of Hydraulic Production Plant
108.4 Accumulated Provision for Depreciation of Other Production Plant
108.5 Accumulated Provision for Depreciation of Transmission Plant
108.6 Accumulated Provision for Depreciation of Distribution Plant
108.7 Accumulated Provision for Depreciation of General Plant
108.8 Retirement Work in Progress

These subsidiary records shall reflect the current credits and debits to this account in sufficient detail to show separately for each such functional classification: (1) the amount of accrual for depreciation, (2) the book cost of property retired, (3) cost of removal, (4) salvage, and (5) other items, including recoveries from insurance.

D. When transfers of plant are made from one electric plant account to another, or from or to another utility department, of from or to nonutility property accounts, the accounting for depreciation shall be as provided in §1767.16 (l).

E. The utility is restricted in its use of the accumulated provision for depreciation to the purposes set forth above. It shall not transfer any portion of this account to retained earnings or make any other use thereof without authorization by RUS.

109 [Reserved]

110 [Reserved]

111 Accumulated Provision for Amortization of Electric Utility Plant

A. This account shall be credited with the following:

1. Amounts charged to Account 404, Amortization of Limited-Term Electric Plant, for the current amortization of limited-term electric plant investments.

2. Amounts charged to Account 421, Miscellaneous Nonoperating Income, for amortization expense on property included in Account 105, Electric Plant Held for Future Use. Include also the balance of accumulated provision for

amortization on property when transferred to Account 105, Electric Plant Held for Future Use, from other property accounts. See also Paragraph A(2), Account 108, Accumulated Provision for Depreciation of Electric Utility Plant.

3. Amounts charged to Account 405, Amortization of Other Electric Plant.

4. Amounts charged to Account 413, Expenses of Electric Plant Leased to Others, for the current amortization of limited-term or other investments subject to amortization included in Account 104, Electric Plant Leased to Others.

5. Amounts charged to Account 425, Miscellaneous Amortization, for the amortization of intangible or other electric plant which does not have a definite or terminable life and is not subject to charges for depreciation expense, with RUS approval.

(The utility shall maintain subaccounts of this account for the amortization applicable to electric plant in service, electric plant leased to others and electric plant held for future use.)

B. When any property to which this account applies is sold, relinquished, or otherwise retired from service, this account shall be charged with the amount previously credited in respect to such property. The book cost of the property so retired less the amount chargeable to this account and less the net proceeds realized at retirement shall be included in Account 421.1, Gain on Disposition of Property, or Account 421.2, Loss on Disposition of Property, as appropriate.

C. For general ledger and balance sheet purposes, this account shall be regarded and treated as a single composite provision for amortization. For purposes of analysis, however, each utility shall maintain subsidiary records in which this account is segregated according to the following functional classification for electric plant: (1) Steam production, (2) Nuclear production, (3) Hydraulic production, (4) Other production, (5) Transmission, (6) Distribution, and (7) General. These subsidiary records shall reflect the current credits and debits to this account in sufficient detail to show separately for each such functional classification: (1) the amount of accrual for amortization, (2) the book cost of property retired, (3) cost of removal, (4) salvage, and (5) other items, including recoveries from insurance.

D. The utility is restricted in its use of the accumulated provision for amortization to the purposes set forth above. It shall not transfer any portion of this account to retained earnings or make any other use thereof without authorization by RUS.

112 [Reserved]

113 [Reserved]

114 Electric Plant Acquisition Adjustments

A. This account shall include the difference between the cost to the accounting utility of electric plant acquired as an operating unit or system by purchase, merger, consolidation, liquidation, or otherwise, and the original cost, estimated, if not known, of such property, less the amount or amounts credited by the accounting utility at the time of acquisition to accumulated provisions for depreciation and amortization and contributions in aid of construction with respect to such property.

B. With respect to acquisitions after the effective date of this system of accounts, this account shall be subdivided so as to show the amounts included herein for each property acquisition and to electric plant in service, electric plant held for future use, and electric plant leased to others. (See § 1767.16 (e).)

C. Debit amounts recorded in this account related to plant and land acquisition may be amortized to Account 425, Miscellaneous Amortization, over a period not longer than the estimated remaining life of the properties to which such amounts relate. Amounts related to the acquisition of land only may be amortized to Account 425 over a period of not more than 15 years. Should a utility wish to account for debit amounts in this account in any other manner, it shall petition RUS for authority to do so. Credit amounts recorded in this account shall be accounted for as directed by RUS.

115 Accumulated Provision for Amortization of Electric Plant Acquisition Adjustments

This account shall be credited or debited with amounts which are includible in Account 406, Amortization of Electric Plant Acquisition Adjustments, or Account 425, Miscellaneous Amortization, for the purpose of providing for the extinguishment of amounts in Account 114, Electric Plant Acquisition Adjustments, in instances where the amortization of Account 114 is not being made by direct write-off of the account.

116 Other Electric Plant Adjustments

A. This account shall include the difference between the original cost, estimated if not known, and the book cost of electric plant to the extent that such difference is not properly includible in Account 114, Electric Plant Acquisition Adjustments. (See §1767.16 (a)(3))

B. Amounts included in this account shall be classified in such manner as to show the origin of each amount and shall be disposed of as RUS may approve or direct.

NOTE: The provisions of this account shall not be construed as approving or authorizing the recording of appreciation of electric plant.

118 Other Utility Plant

This account shall include the balances in accounts for utility plant, other than electric plant, such as gas, or railway.

119 Accumulated Provision for Depreciation and Amortization of Other Utility Plant

This account shall include the accumulated provision for depreciation and amortization applicable to utility property other than electric plant.

120.1 Nuclear Fuel in Process of Refinement, Conversion, Enrichment, and Fabrication

A. This account shall include the original cost to the utility of nuclear fuel materials while in process of refinement, conversion, enrichment, and fabrication into nuclear fuel assemblies and components, including processing, fabrication, and necessary shipping costs. This account shall also include the salvage value of nuclear materials which are actually being reprocessed for use and were transferred from Account 120.5, Accumulated Provision for Amortization of Nuclear Fuel Assemblies. (See §1767.10 (a)(27).)

B. This account shall be credited and Account 120.2, Nuclear Fuel Materials and Assemblies—Stock Account, shall be debited for the cost of completed fuel assemblies delivered for use in refueling or to be held as spares. In the case of the initial core loading, the transfer shall be made directly to Account 120.3, Nuclear Fuel Assemblies in Reactor, upon the conclusion of the experimental or test period of the plant prior to its becoming available for service.

Items

1. Cost of natural uranium, uranium ores concentrates or other nuclear fuel sources, such as thorium, plutonium, and U–233.
2. Value of recovered nuclear materials being reprocessed for use.
3. Milling process costs.
4. Sampling and weighing, and assaying costs.
5. Purification and conversion process costs.
6. Costs of enrichment by gaseous diffusion or other methods.
7. Costs of fabrication into fuel forms suitable for insertion in the reactor.
8. All shipping costs of materials and components, including shipping of fabricated fuel assemblies to the reactor site.
9. Use charges on leased nuclear materials while in process of refinement, conversion, enrichment, and fabrication.

120.2 Nuclear Fuel Materials and Assemblies—Stock Account

A. This account shall be debited and Account 120.1, Nuclear Fuel in Process of Refinement, Conversion, Enrichment and Fabrication, shall be credited with the cost of fabricated fuel assemblies delivered for use in refueling or to be carried in stock as spares. It shall also include the original cost of fabricated fuel assemblies purchased in

completed form. This account shall also include the original cost of partially irradiated fuel assemblies being held in stock for reinsertion in a reactor which had been transferred from Account 120.3, Nuclear Fuel Assemblies in Reactor.

B. When fuel assemblies included in this account are inserted in a reactor, this account shall be credited and Account 120.3, Nuclear Fuel Assemblies in Reactor, debited for the cost of such assemblies.

C. This account shall also include the cost of nuclear materials and byproduct materials being held for future use and not actually in process in Account 120.1, Nuclear Fuel in Process of Refinement, Conversion, Enrichment and Fabrication.

120.3 Nuclear Fuel Assemblies in Reactor

A. This account shall include the cost of nuclear fuel assemblies when inserted in a reactor for the production of electricity. The amounts included herein shall be transferred from Account 120.2, Nuclear Fuel Materials and Assemblies—Stock Account, except for the initial core loading which will be transferred directly from Account 120.1, Nuclear Fuel in Process of Refinement, Conversion, Enrichment and Fabrication.

B. Upon removal of fuel assemblies from a reactor, the original cost of the assemblies removed shall be transferred to Account 120.4, Spent Nuclear Fuel, or Account 120.2, Nuclear Fuel Materials and Assemblies—Stock Account, as appropriate.

120.4 Spent Nuclear Fuel

A. This account shall include the original cost of nuclear fuel assemblies, in the process of cooling, transferred from Account 120.3, Nuclear Fuel Assemblies in Reactor, upon removal from a reactor pending reprocessing.

B. This account shall be credited and Account 120.5, Accumulated Provision for Amortization of Nuclear Fuel Assemblies, debited for fuel assemblies, after the cooling period is over, at the cost recorded in this account.

120.5 Accumulated Provision for Amortization of Nuclear Fuel Assemblies

A. This account shall be credited and Account 518, Nuclear Fuel Expense, shall be debited for the amortization of the net cost of nuclear fuel assemblies used in the production of energy. The net cost of nuclear fuel assemblies subject to amortization shall be the original cost of nuclear fuel assemblies, plus or less the expected net salvage value of uranium, plutonium, and other by-products.

B. This account shall be credited with the net salvage value of uranium, plutonium, and other nuclear by-products when such items are sold, transferred or otherwise disposed. Account 120.1, Nuclear Fuel in Process of Refinement, Conversion, Enrichment and Fabrication, shall be debited with the net salvage value of nuclear materials to be reprocessed. Account 157, Nuclear Materials Held for Sale, shall be debited for the net salvage value of nuclear materials not to be reprocessed but to be sold or otherwise disposed of and Account 120.2, Nuclear Fuel Materials and Assemblies—Stock Account, will be debited with the net salvage value of nuclear materials that will be held for future use and not actually in process, in Account 120.1, Nuclear Fuel in Process of Refinement, Conversion, Enrichment, and Fabrication.

C. This account shall be debited and Account 120.4, Spent Nuclear Fuel, shall be credited with the cost of fuel assemblies at the end of the cooling period.

120.6 Nuclear Fuel Under Capital Leases

A. This account shall include the amount recorded under capital leases for nuclear fuel leased from others for use by the utility in its utility operations.

B. Records shall be maintained with respect to each capital lease reflecting: (1) name of lessor, (2) basic details of lease, (3) terminal date, (4) original cost or fair market value of nuclear fuel leased, (5) future minimum lease payments, (6) the amount representing interest and the interest rate used, and (7) expenses paid.

Other Property and Investments

121 Nonutility Property

A. This account shall include the book cost of land, structures, equipment, or other tangible or intangible property owned by the utility, but not used in utility service and not properly includible in Account 105, Electric Plant Held for Future Use.

B. This account shall also include the amount recorded under capital leases for property leased from others and used by the utility in its nonutility operations. Records shall be maintained with respect to each lease reflecting: (1) name of lessor, (2) basic details of lease, (3) terminal date, (4) original cost or fair market value of property leased, (5) future minimum lease payments, (6) executory costs, (7) present value of minimum lessee payments, (8) the amount representing interest and the interest rate used, and (9) expenses paid.

C. This account shall be subdivided so as to show the amount of property used in operations which are nonutility in character but nevertheless constitute a distinct operating activity of the company (such as operation of an ice department where such activity is not classed as a utility) and the amount of miscellaneous property not used in operations. The records in support of each subaccount shall be maintained so as to show an appropriate classification of the property.

NOTE: The gain from the sale or other disposition of property included in this account which had been previously recorded in Account 105, Electric Plant Held for Future Use, shall be accounted for in accordance with Paragraph C of Account 105.

122 Accumulated Provision for Depreciation and Amortization of Nonutility Property

This account shall include the accumulated provision for depreciation and amortization applicable to nonutility property.

123 Investment in Associated Companies

A. This account shall include the book cost of investments in securities issued or assumed by associated companies and investment advances to such companies, including interest accrued thereon when such interest is not subject to current settlement, provided that the investment does not relate to a subsidiary company. (If the investment relates to a subsidiary company, it shall be included in Account 123.11, Investment in Subsidiary Companies.) Include herein the offsetting entry to the recording of amortization of discount or premium on interest bearing investments. (See Account 419, Interest and Dividend Income.)

B. This account shall be maintained in such manner as to show the investment in securities of, and advances to, each associated company together with full particulars regarding any of such investments that are pledged.

NOTE A: Securities and advances of associated companies owned and pledged shall be included in this account, but such securities, if held in special deposits or in special funds, shall be included in the appropriate deposit or fund account. A complete record of securities pledged shall be maintained.

NOTE B: Securities of associated companies held as temporary cash investments are includible in Account 136, Temporary Cash Investments.

NOTE C: Balances in open accounts with associated companies, which are subject to current settlement, are includible in Account 146, Accounts Receivable from Associated Companies.

NOTE D: The utility may write down the cost of any security in recognition of a decline in the value thereof. Securities shall be written off or written down to a nominal value if there is no reasonable prospect of substantial value. Fluctuations in market value shall not be recorded but a permanent impairment in the value of securities shall be recognized in the accounts. When securities are written off or written down, the amount of the adjustment shall be charged to Account 426.5, Other Deductions, or to an appropriate account for accumulated provisions for loss in value established as a separate subdivision of this account.

C. Account 123 shall be subaccounted as follows:

123.1 Patronage Capital from Associated Cooperatives

123.3 Investment in Associated Organizations—Federal Economic Development Loans

123.4 Investment in Associated Organizations—Non-Federal Economic Development Loans
123.11 Investment in Subsidiary Companies
123.21 Subscriptions to Capital Term Certificates—Supplemental Financing
123.22 Investment in Capital Term Certificates—Supplemental Financing
123.23 Other Investments in Associated Organizations

123.1 Patronage Capital from Associated Cooperatives

This account shall include patronage capital credits allocated to the accounting borrower by G&T cooperatives. It shall also include capital credits, deferred patronage refunds, or like items from other associated cooperatives. The account shall be maintained so as to reflect separately, the allocations of patronage capital and patronage refunds from each organization that makes such allocations to the borrower.

123.3 Investment in Associated Organizations—Federal Economic Development Loans

This account shall include investment advances of Federal funds received from a Rural Economic Development Grant to associated organizations for authorized rural economic development projects.

123.4 Investment in Associated Organizations—Non-Federal Economic Development Loans

This account shall include investment advances of non-Federal funds from the Rural Economic Development Grant revolving fund to associated organizations for authorized rural economic development projects.

123.11 Investment in Subsidiary Companies

A. This account shall include the cost of investments in securities issued or assumed by subsidiary companies and investment advances to such companies, including interest accrued thereon when such interest is not subject to current settlement, plus the equity in undistributed earnings or losses of such subsidiary companies since acquisition. This account shall be credited with any dividends declared by such subsidiaries.

B. This account shall be maintained in such a manner as to show separately for each subsidiary: the cost of such investments in the securities of the subsidiary at the time of acquisition; the amount of equity in the subsidiary's undistributed net earnings or net losses since acquisition; advances or loans to such subsidiary; and full particulars regarding any such investments that are pledged.

123.21 Subscriptions to Capital Term Certificates—Supplemental Financing

This account shall include the total subscriptions to capital term certificates of CFC. When subscriptions are paid, this account shall be credited and Account 123.22, Investments in Capital Term Certificates—Supplemental Financing, debited.

123.22 Investments in Capital Term Certificates—Supplemental Financing

This account shall include paid subscriptions in capital term certificates of CFC or other supplemental lenders.

123.23 Other Investments in Associated Organizations

This account shall include investments in capital stock, securities, membership fees, and investment advances to associated organizations other than provided for elsewhere. This account shall be maintained in such a manner as to show the investment in stock and securities of and advances to each associated organization.

Items

1. Investments in capital stock of associated organizations.
2. Investments in securities issued by associated organizations.
3. Membership fees in associated organizations, including NRECA, and Statewide associations of RUS-financed borrowers.
4. Investment advances to associated organizations.

124 Other Investments

A. This account shall include the book cost of investments in securities issued or assumed by nonassociated

companies, investment advances to such companies, and any investments not accounted for elsewhere. Include also the offsetting entry to the recording of amortization of discount or premium on interest bearing investments. (See Account 419, Interest and Dividend Income.)

B. The records shall be maintained in such manner as to show the amount of each investment and the investment advances to each person.

C. Account 124 shall be subaccounted as follows:

124.1 Other Investments—Federal Economic Development Loans
124.2 Other Investments—Non-Federal Economic Development Loans

NOTE A: Securities owned and pledged shall be included in this account, but securities held in special deposits or in special funds shall be included in appropriate deposit or fund accounts. A complete record of securities pledged shall be maintained.

NOTE B: Securities held as temporary cash investments shall not be included in this account.

NOTE C: See Note D of Account 123.

124.1 Other Investments—Federal Economic Development Loans

This account shall include investment advances of Federal funds received from a Rural Economic Development Grant to nonassociated organizations for authorized rural economic development projects.

124.2 Other Investments—Non-Federal Economic Development Loans

This account shall include investment advances of non-Federal funds from the Rural Economic Development Grant revolving fund to nonassociated organizations for authorized rural economic development projects.

125 Sinking Funds

This account shall include the amount of cash and book cost of investments held in sinking funds. A separate account, with appropriate title, shall be kept for each sinking fund. Transfers from this account to special deposit accounts, may be made as necessary for the purpose of paying matured sinking fund obligations, or obligations called for redemption but not presented, or the interest thereon.

126 Depreciation Fund

This account shall include the amount of cash and the book cost of investments which have been segregated in a special fund for the purpose of identifying such assets with the accumulated provisions for depreciation.

128 Other Special Funds

This account shall include the amount of cash and book cost of investments which have been segregated in special funds for insurance, employee pensions, savings, relief, hospital, and other purposes not provided for elsewhere. A separate account, with appropriate title, shall be kept for each fund.

NOTE: Amounts deposited with a trustee under the terms of an irrevocable trust agreement for pensions or other employee benefits shall not be included in this account.

Current and Accrued Assets

Current and accrued assets are cash, those assets which are readily convertible into cash or are held for current use in operations or construction, current claims against others, payment of which is reasonably assured, and amounts accruing to the utility which are subject to current settlement, except such items for which accounts other than those designated as current and accrued assets are provided. There shall not be included in the category of accounts designated as current and accrued assets any item, the amount or collectibility of which is not reasonably assured, unless an adequate provision for possible loss has been made therefor. Items of current character but of doubtful value may be written down, and for record purposes carried in these accounts at nominal value.

131 Cash

A. This account shall include the amount of current cash funds except working funds.

B. Account 131 shall be subaccounted as follows:

131.1 Cash—General
131.2 Cash—Construction Fund—Trustee

131.3 Cash—Installation Loan and Collection Fund
131.4 Transfer of Cash
131.12 Cash—General—Economic Development Loan Funds
131.13 Cash—General—Economic Development Grant Funds
131.14 Cash—General—Economic Development Non-Federal Revolving Funds

131.1 Cash—General

This account shall include all cash of the organization not provided for elsewhere. Separate subaccounts may be maintained for each bank account in which general cash is maintained. Funds held by others for current obligations shall be recorded in Account 134, Other Special Deposits.

131.2 Cash—Construction Fund—Trustee

This account shall include the cash received from the Rural Utilities Service, CFC, and any other source of supplemental financing for financing the construction, purchase, and operation of electric facilities. RUS construction loan fund advances shall be charged to this account and credited to Account 224.4, RUS Notes Executed—Construction—Debit. CFC and other supplemental lender construction loan fund advances shall be charged to this account and credited to Account 224.13, Supplemental Financing Notes Executed—Debit.

131.3 Cash—Installation Loan and Collection Fund

A. This account shall include the cash advanced on installation loans made subsequent to September 13, 1957. Such advances shall be debited to this account as received and credited to Account 224.10, RUS Notes Executed—Installation—Debit. This account shall also include interest and principal collections received on consumers' loans financed from RUS loans made subsequent to September 13, 1957.

B. Payments shall be made from this account solely for financing consumers' loans for the purpose of wiring of consumers' premises, and the acquisition and installation of electrical and plumbing appliances and equipment by consumers. The cash in this account is also used for the payment of principal and interest on installation loans made by RUS, subsequent to September 13, 1957, in accordance with the terms of the loan agreement.

131.4 Transfer of Cash

This account shall be used in transferring funds from one bank account to another. This account is charged when the check is drawn for the transfer and entered in the check register, and credited when the amount transferred is entered in the cash receipts book. This account is to be used as a clearing account and should not have a balance at the end of an accounting period.

131.12 Cash—General—Economic Development Funds

This account shall include the cash received from the Rural Utilities Service for Rural Economic Development Loans. Economic development loan advances shall be charged to this account and credited to Account 224.17, RUS Notes Executed—Economic Development—Debit.

131.13 Cash—General—Economic Development Grant Funds

This account shall include cash received from the Rural Utilities Service for Rural Economic Development Grants. Economic development grant funds shall be charged to this account and credited to Account 224.18, Other Long-Term Debt—Grant Funds; Account 208, Donated Capital; or Account 421, Miscellaneous Nonoperating Income, as appropriate. This account shall be credited and either Account 123.3, Investment in Associated Organizations—Federal Economic Development Loans, or Account 124.1, Other Investments—Federal Economic Development Loans, shall be debited, as appropriate, with the amount of an economic development revolving fund loan.

131.14 Cash—General—Economic Development Non-Federal Revolving Funds

This account shall include all non-Federal funds comprising the economic development revolving fund. It shall include all funds supplied by the borrower as well as all cash received from the repayment of loans made from the

economic development revolving fund. This account shall be credited and either Account 123.4, Investment in Associated Organizations—Non-Federal Economic Development Loans, or Account 124.2, Other Investments—Non-Federal Economic Development Loans, shall be debited, as appropriate, with the amount of an economic development revolving fund loan.

132 Interest Special Deposits

This account shall include special deposits with fiscal agents or others for the payment of interest.

133 Dividend Special Deposits

This account shall include special deposits with fiscal agents or others for the payment of dividends.

134 Other Special Deposits

This account shall include deposits with fiscal agents or others for special purposes other than the payment of interest and dividends. Such special deposits may include cash deposited with Federal, state, or municipal authorities as a guaranty for the fulfillment of obligations; cash deposited with trustees to be held until mortgaged property sold, destroyed, or otherwise disposed of is replaced; and cash realized from the sale of the accounting utility's securities and deposited with trustees to be held until invested in property of the utility. Entries to this account shall specify the purpose for which the deposit is made.

NOTE: Assets available for general corporate purposes shall not be included in this account. Further, deposits for more than one year, which are not offset by current liabilities, shall not be charged to this account but to Account 128, Other Special Funds.

135 Working Funds

This account shall include cash advanced to officers, agents, employees, and others as petty cash or working funds.

136 Temporary Cash Investments

A. This account shall include the book cost of investments, such as demand and time loans, bankers' acceptances, United States Treasury certificates, marketable securities, and other similar investments, acquired for the purpose of temporarily investing cash.

B. This account shall be so maintained as to show separately temporary cash investments in securities of associated companies and of others. Records shall be kept of any pledged investments.

141 Notes Receivable

A. This account shall include the book cost, not includible elsewhere, of all collectible obligations in the form of notes receivable and similar evidences (except interest coupons) of money due on demand or within one year from the date of issue, except, however, notes receivable from associated companies. (See Account 136, Temporary Cash Investments, and Account 145, Notes Receivable from Associated Companies.)

NOTE: The face amount of notes receivable discounted, sold, or transferred without releasing the utility from liability as endorser thereon, shall be credited to a separate subdivision of this account and appropriate disclosure shall be made in the financial statements of any contingent liability arising from such transactions.

B. Account 141 shall be subaccounted as follows:

141.1 Accumulated Provision for Uncollectible Notes—Credit

141.1 Accumulated Provision for Uncollectible Notes—Credit

This account shall be credited with amounts provided for losses on notes receivable which may become uncollectible, and also with collections on notes previously charged hereto. Concurrent charges shall be made to Account 904, Uncollectible Accounts.

142 Customer Accounts Receivable

A. This account shall include amounts due from customers for utility service and for merchandising, jobbing, and contract work. This account shall not include amounts due from associated companies.

B. This account shall be maintained so as to permit ready segregation of the amounts due for merchandising, jobbing, and contract work.

C. Account 142 shall be subaccounted as follows:

142.1 Customer Accounts Receivable—Electric
142.2 Customer Accounts Receivable—Other

142.1 Customer Accounts Receivable—Electric

This account shall include amounts due from customers for utility service.

142.2 Customer Accounts Receivable—Other

This account shall include amounts due from customers for merchandising, jobbing, and contract work.

143 Other Accounts Receivable

A. This account shall include amounts due the utility upon open accounts, other than amounts due from associated companies and from customers for utility services and merchandising, jobbing and contract work.

B. This account shall be maintained so as to show separately amounts due on subscriptions to capital stock and from officers and employees. The account shall not include amounts advanced to officers or others as working funds. (See Account 135, Working Funds.)

144 Accumulated Provision for Uncollectible Accounts—Credit

A. This account shall include amounts provided for losses on accounts receivable which may become uncollectible, and also with collections on accounts previously charged hereto. Concurrent charges shall be made to Account 904, Uncollectible Accounts, for amounts applicable to utility operations, and to corresponding accounts for other operations. Records shall be maintained so as to show the write-offs of accounts receivable for each utility department.

B. Account 144 shall be subaccounted as follows:

144.1 Accumulated Provision for Uncollectible Customer Accounts—Credit
144.2 Accumulated Provision for Uncollectible Merchandising Accounts—Credit
144.3 Accumulated Provision for Uncollectible Accounts, Officers and Employees—Credit
144.4 Accumulated Provision for Other Uncollectible Accounts—Credit

144.1 Accumulated Provision for Uncollectible Customer Accounts—Credit

This account shall be credited with amounts provided for losses on accounts receivable which may become uncollectible, and also with collections on accounts previously charged hereto. Concurrent charges shall be made to Account 904, Uncollectible Accounts.

144.2 Accumulated Provision for Uncollectible Merchandising Accounts—Credit

This account shall be credited with amounts provided for losses on merchandising, jobbing, and contract work which may become uncollectible, and also with collections on accounts previously charged hereto. Concurrent charges shall be made to Account 904, Uncollectible Accounts, for amounts applicable to utility operations, and to corresponding accounts for other operations.

144.3 Accumulated Provision for Uncollectible Accounts, Officers and Employees—Credit

This account shall be credited with amounts provided for losses on accounts receivable from officers and employees which may become uncollectible and also with collections on accounts previously charged hereto. Concurrent charges shall be made to Account 904, Uncollectible Accounts.

144.4 Accumulated Provision for Other Uncollectible Accounts—Credit

This account shall be credited with amounts provided for losses on accounts receivable which may become uncollectible and for which the recording of this credit has not been provided for elsewhere. This account shall also be credited with collections on accounts previously charged hereto. Concurrent charges shall be made to Account 904, Uncollectible Accounts, for

amounts applicable to utility operations and to corresponding accounts for other operations.

145 Notes Receivable from Associated Companies

This account shall include notes upon which associated companies are liable, and which mature and are expected to be paid in full not later than one year from the date of issue, together with any interest thereon, and debit balances subject to current settlement in open accounts with associated companies. Items which do not bear a specified due date but which have been carried for more than twelve months and items which are not paid within twelve months from due date shall be transferred to Account 123, Investment in Associated Companies.

NOTE: The face amount of notes receivable discounted, sold or transferred without releasing the utility from liability as endorser thereon, shall be credited to a separate subdivision of this account and appropriate disclosure shall be made in the financial statements of any contingent liability arising from such transactions.

146 Accounts Receivable from Associated Companies

This account shall include drafts upon which associated companies are liable, and which mature and are expected to be paid in full not later than one year from the date of issue, together with any interest thereon, and debit balances subject to current settlement in open accounts with associated companies. Items which do not bear a specified due date but which have been carried for more than twelve months and items which are not paid within twelve months from due date shall be transferred to Account 123, Investment in Associated Companies.

NOTE: On the balance sheet, accounts receivable from an associated company may be offset against accounts payable to the same company.

151 Fuel Stock

This account shall include the book cost of fuel on hand.

Items

1. Invoice price of fuel less any cash or other discounts.
2. Freight, switching, demurrage, and other transportation charges, not including, however, any charges for unloading from the shipping medium.
3. Excise taxes, purchasing agents' commissions, insurance, and other expenses directly assignable to cost of fuel.
4. Operating, maintenance and depreciation expenses, and ad valorem taxes on utility-owned transportation equipment used to transport fuel from the point of acquisition to the unloading point.
5. Lease or rental costs of transportation equipment used to transport fuel from the point of acquisition to the unloading point.

152 Fuel Stock Expenses Undistributed

A. This account may include the cost of labor and of supplies used and expenses incurred in unloading fuel from the shipping medium and in the handling thereof prior to its use, if such expenses are sufficiently significant in amount to warrant being treated as a part of the cost of fuel inventory rather than being charged direct to expense as incurred.

B. Amounts included herein shall be charged to expense as the fuel is used to the end that the balance herein shall not exceed the expenses attributable to the inventory of fuel on hand.

Items

Labor:

1. Procuring and handling of fuel.
2. All routine fuel analyses.
3. Unloading from shipping facility and placing in storage.
4. Moving of fuel in storage and transferring from one station to another.
5. Handling from storage or shipping facility to first bunker, hopper, bucket, tank, or holder of boiler house structure.
6. Operation of mechanical equipment such as locomotives, trucks, cars, boats, barges, and cranes.

Supplies and Expenses:

1. Tools, lubricants and other supplies.
2. Operating supplies for mechanical equipment.
3. Transportation and other expenses in moving fuel.
4. Stores expenses applicable to fuel.

153 Residuals

This account shall include the book cost of any residuals produced in the production or manufacturing processes.

154 Plant Materials and Operating Supplies

A. This account shall include the cost of materials purchased primarily for use in the utility business for construction, operation and maintenance purposes. It shall also include the book cost of materials recovered in connection with construction, maintenance, or the retirement of property, such materials being credited to construction, maintenance, or accumulated depreciation provision, respectively, and included herein as follows:

1. Reusable materials consisting of large individual items shall be included in this account at original cost, estimated if not known. The cost of repairing such items shall be charged to the maintenance account appropriate for the previous use.
2. Reusable materials consisting of relatively small items, the identity of which (from the date of original installation to the final abandonment or sale thereof) cannot be ascertained without undue refinement in accounting, shall be included in this account at current prices new for such items. The cost of repairing such items shall be charged to the appropriate expense account as indicated by previous use.
3. Scrap and nonusable materials included in this account shall be carried at the estimated net amount realizable therefrom. The difference between the amounts realized for scrap and nonusable materials sold and the net amount at which the materials were carried in this account, as far as practicable, shall be adjusted to the accounts credited when the materials were charged to this account.

B. Materials and supplies issued shall be credited hereto and charged to the appropriate construction, operating expense, or other account on the basis of a unit price determined by the use of cumulative average, first-in-first-out, or such other method of inventory accounting as conforms with accepted accounting standards consistently applied.

Items

1. Invoice price of materials less cash or other discounts.
2. Freight, switching, or other transportation charges when practicable to include as part of the cost of particular materials to which they relate.
3. Customs duties and excise taxes.
4. Costs of inspection and special tests prior to acceptance.
5. Insurance and other directly assignable charges.

NOTE: Where expenses applicable to materials purchased cannot be directly assigned to particular purchases, they shall be charged to Account 163, Stores Expense Undistributed.

155 Merchandise

This account shall include the book cost of materials and supplies and appliances and equipment held primarily for merchandising, jobbing, and contract work. The principles prescribed in accounting for utility materials and supplies shall be observed with respect to items carried in this account.

156 Other Materials and Supplies

This account shall include the book cost of materials and supplies held primarily for nonutility purposes. The principles prescribed in accounting for utility materials and supplies shall be observed with respect to items carried in this account.

157 Nuclear Materials Held for Sale

This account shall include the net salvage value of uranium, plutonium, and other nuclear materials held by the company for sale or other disposition that are not to be reused by the company in its electric utility operations. This account shall be debited and Account 120.5, Accumulated Provision for Amortization of Nuclear Fuel Assemblies, credited for such net salvage value. Any difference between the amount recorded in this account and

the actual amount realized from the sale of materials shall be debited or credited, as appropriate, to Account 518, Nuclear Fuel Expense, at the time of such sale.

158.1 Allowance Inventory

A. This account shall include the cost of allowances owned by the utility and not withheld by the Environmental Protection Agency. See § 1767.15 (u) and Account 158.2, Allowances Withheld.

B. This account shall be credited and Account 509, Allowances, shall be debited concurrent with the monthly emission of sulfur dioxide.

C. Separate subdivisions of this account shall be maintained so as to separately account for those allowances usable in the current year and in each subsequent year. The underlying records of these subdivisions shall be maintained in sufficient detail so as to identify each allowance included; the origin of each allowance; and the acquisition cost, if any, of the allowance.

158.2 Allowances Withheld

A. This account shall include the cost of allowances owned by the utility but withheld by the Environmental Protection Agency. (See § 1767.15 (u).)

B. The inventory cost of the allowances released by the Environmental Protection Agency for use by the utility shall be transferred to Account 158.1, Allowance Inventory.

C. The underlying records of this account shall be maintained in sufficient detail so as to identify each allowance included; the origin of each allowance; and the acquisition cost, if any, of the allowances.

163 Stores Expense Undistributed

A. This account shall include the cost of supervision, labor, and expenses incurred in the operation of general storerooms, including purchasing, storage, handling, and distribution of materials and supplies.

B. This account shall be cleared by adding to the cost of materials and supplies issued, a suitable loading charge which will distribute the expense equitably over stores issues. The balance in the account at the close of the year shall not exceed the amount of stores expenses reasonably attributable to the inventory of materials and supplies, exclusive of fuel, as any amount applicable to fuel costs should be included in Account 152, Fuel Stock Expenses Undistributed.

Items

Labor:

1. Inspecting and testing materials and supplies when not assignable to specific items.
2. Unloading from shipping facility and placing in storage.
3. Supervision of purchasing and stores department to extent assignable to materials handled through stores.
4. Getting materials from stock and in readiness to go out.
5. Inventorying stock received or stock on hand by stores employees but not including inventories by general department employees as part of internal or general audits.
6. Purchasing department activities in checking material needs, investigating sources of supply, analyzing prices, preparing and placing orders, and related activities to extent applicable to materials handled through stores. (Optional: Purchasing department expenses may be included in administrative and general expenses.)
7. Maintaining stores equipment.
8. Cleaning and tidying storerooms and stores offices.
9. Keeping stock records, including the recording and posting of material receipts and issues and maintaining inventory records of stock.
10. Collecting and handling scrap materials in stores.

Supplies and Expenses:

1. Adjustments of inventories of materials and supplies but not including large differences which can readily be assigned to important classes of materials and equitably distributed among the accounts to which such classes of materials have been charged since the previous inventory.
2. Cash and other discounts not practically assignable to specific materials.
3. Freight and express charges when not assignable to specific items.
4. Heat, light, and power for storerooms and store offices.

5. Brooms, brushes, sweeping compounds and other supplies used in cleaning and tidying storerooms and stores offices.

6. Injuries and damages.

7. Insurance on materials and supplies and on stores equipment.

8. Losses due to breakage, leakage, evaporation, fire or other causes, less credits for amounts received from insurance, transportation companies, or others in compensation of such losses.

9. Postage, printing, stationery, and office supplies.

10. Rent of storage space and facilities.

11. Communication service.

12. Excise and other similar taxes not assignable to specific materials.

13. Transportation expense on inward movement of stores and on transfer between storerooms but not including charges on materials recovered from retirements which shall be accounted for as part of the cost of removal.

NOTE: A physical inventory of each class of materials and supplies shall be made at least every two years.

165 Prepayments

A. This account shall include amounts representing prepayments of insurance, rents, taxes, interest, and miscellaneous items, and shall be kept or supported in such manner as to disclose the amount of each class of prepayment.

B. Account 165 shall be subaccounted as follows:

165.1 Prepayments—Insurance
165.2 Other Prepayments

171 Interest and Dividends Receivable

This account shall include the amount of interest on bonds, mortgages, notes, commercial paper, loans, open accounts, and deposits, the payment of which is reasonably assured, and the amount of dividends declared or guaranteed on stocks owned.

NOTE A: Interest which is not subject to current settlement shall not be included herein but in the account in which the associated principle is recorded.

NOTE B: Interest and dividends receivable from associated companies shall be included in Account 146, Accounts Receivable from Associated Companies.

172 Rents Receivable

This account shall include rents receivable or accrued on property rented or leased by the utility to others.

NOTE: Rents receivable from associated companies shall be included in Account 146, Accounts Receivable from Associated Companies.

173 Accrued Utility Revenues

At the option of the utility, the estimated amount accrued for service rendered, but not billed at the end of any accounting period, may be included herein. If accruals are made for unbilled revenues, accruals shall also be made for unbilled expenses, such as the purchase of energy.

174 Miscellaneous Current and Accrued Assets

This account shall include the book cost of all other current and accrued assets, appropriately designated and supported so as to show the nature of each asset included herein.

Deferred Debits

181 Unamortized Debt Expense

This account shall include expenses related to the issuance or assumption of debt securities. Amounts recorded in this account shall be amortized over the life of each respective issue under a plan which will distribute the amount equitably over the life of the security. The amortization shall be on a monthly basis, and the amounts thereof shall be charged to Account 428, Amortization of Debt Discount and Expense. Any unamortized amounts outstanding at the time that the related debt is prematurely reacquired shall be accounted for as indicated in § 1767.15 (q).

182.1 Extraordinary Property Losses

A. When authorized or directed by RUS, this account shall include extraordinary losses which could not reasonably have been anticipated and which are not covered by insurance or other provisions, such as unforeseen damages to property.

B. Application to RUS for permission to use this account shall be accompanied by a statement giving a complete explanation with respect to the items which it is proposed to include herein, the period over which, and the accounts to which it is proposed to write off the charges, and other pertinent information.

182.2 Unrecovered Plant and Regulatory Study Costs

A. This account shall include: (1) nonrecurring costs of studies and analyses mandated by regulatory bodies related to plants in service, transferred from Account 183, Preliminary Survey and Investigations Charges, and not resulting in construction; and (2) when authorized by RUS, significant unrecovered costs of plant facilities where construction has been cancelled or which have been prematurely retired.

B. This account shall be credited and Account 407, Amortization of Property Losses, Unrecovered Plant and Regulatory Study Costs, shall be debited over the period specified by RUS.

C. Any additional costs incurred, relative to the cancellation or premature retirement, may be included in this account and amortized over the remaining period of the original amortization period. Should any gains or recoveries be realized relative to the cancelled or prematurely retired plant, such amounts shall be used to reduce the unamortized amount of the costs recorded herein.

D. In the event that the recovery of costs included herein is disallowed in the rate proceedings, the disallowed costs shall be charged to Account 426.5, Other Deductions, in the year of such disallowance.

182.3 Other Regulatory Assets

A. This account shall include the amounts of regulatory-created assets, not includable in other accounts, resulting from the ratemaking actions of regulatory agencies. (See the definition of regulatory assets and liabilities.)

B. The amounts included in this account are to be established by those charges which would have been included in net income determinations in the current period under the general requirements of the Uniform System of Accounts but for it being probable that such items will be included in a different period(s) for purposes of developing the rates that the utility is authorized to charge for its utility services. When specific identification of the particular source of a regulatory asset cannot be made, such as in plant phase-ins, rate moderation plans, or rate levelization plans, Account 407.4, Regulatory Credits, shall be credited. The amounts recorded in this account are generally to be charged, concurrently with the recovery of the amounts in rates, to the same account that would have been charged if included in income when incurred, except all regulatory assets established through the use of Account 407.4 shall be charged to Account 407.3, Regulatory Debits, concurrent with the recovery of the amounts in rates.

C. If rate recovery of all or part of an amount included in this account is disallowed, the disallowed amount shall be charged to Account 426.5, Other Deductions, or Account 435, Extraordinary Deductions, in the year of the disallowance.

D. The records supporting the entries to this account shall be kept so that the utility can furnish full information as to the nature and amount of each regulatory asset included in this account, including justification for inclusion of such amounts in this account.

183 Preliminary Survey and Investigation Charges

A. This account shall be charged with all expenditures for preliminary surveys, plans, and investigations made for the purpose of determining the feasibility of utility projects under contemplation. If construction results, this account shall be credited and the appropriate utility plant account charged. If the work is abandoned, the charge shall be made to Account 426.5, Other Deductions, or to the appropriate operating expense account.

B. This account shall also include costs of studies and analyses mandated by regulatory bodies related to plant in service. If construction results from such studies, this account shall be credited and the appropriate utility

plant account charged with an equitable portion of such study costs directly attributable to new construction. The portion of such study costs not attributable to new construction or the entire cost if construction does not result shall be charged to Account 182.2, Unrecovered Plant and Regulatory Study Costs, or the appropriate operating expense account. The costs of such studies relative to plant under construction shall be included directly inAccount 107, Construction Work in Progress—Electric.

C. The records supporting the entries to this account shall be so kept that the utility can furnish complete information as to the nature and the purpose of the survey, plans, or investigations, and the nature and amounts of the several charges.

NOTE: The amount of preliminary survey and investigation charges transferred to utility plant shall not exceed the expenditures which may reasonably be determined to contribute directly and immediately and without duplication to utility plant.

184 Clearing Accounts

A. This caption shall include undistributed balances in clearing accounts at the date of the balance sheet. Balances in clearing account shall be substantially cleared not later than the end of the calendar year unless items held therein relate to a future period.

B. Account 184 shall be subaccounted as follows:

184.1 Transportation Expense—Clearing
184.2 Clearing Accounts—Other

185 Temporary Facilities

This account shall include amounts shown by work orders for plant installed for temporary use in utility service for periods of less than one year. Such work orders shall be charged with the cost of temporary facilities and credited with payments received from customers and net salvage realized on removal of the temporary facilities. Any net credit or debit resulting shall be cleared to Account 451, Miscellaneous Service Revenues.

186 Miscellaneous Deferred Debits

This account shall include all debits not elsewhere provided for, such as miscellaneous work in progress, and unusual or extraordinary expenses, not included in other accounts, which are in process of amortization and items the proper final disposition of which is uncertain.

187 Deferred Losses from Disposition of Utility Plant

This account shall include losses from the sale or other disposition of property previously recorded in Account 105, Electric Plant Held for Future Use, under the provisions of Paragraphs B, C, and D thereof, where such losses are significant and are to be amortized over a period of 5 years, unless otherwise authorized by RUS. The amortization of the amounts in this account shall be made by debits to Account 411.7, Losses from Disposition of Utility Plant. (See Account 105, Electric Plant Held for Future Use.)

188 Research, Development, and Demonstration Expenditures

A. This account shall be charged with the cost of all expenditures coming within the meaning of Research, Development, and Demonstration (RD&D) of this USoA (See § 1767.10 (a)(34)) except those expenditures properly chargeable to Account 107, Construction Work in Progress—Electric.

B. Costs that are minor or of a general or recurring nature shall be transferred from this account to the appropriate operating expense function or if such costs are common to the overall operations or cannot be feasibly allocated to the various operating accounts, such costs shall be recorded in Account 930.2, Miscellaneous General Expenses.

C. In certain instances, a company may incur large and significant research, development, and demonstration expenditures which are nonrecurring and which would distort the annual research, development, and demonstration charges for the period. In such a case, the portion of such amounts that cause the distortion may be amortized to the appropriate operating expense account over a period not to exceed 5 years unless otherwise authorized by RUS.

D. The entries in this account must be so maintained as to show separately

each project along with complete detail of the nature and purpose of the research, development, and demonstration project together with the related costs.

189 Unamortized Loss on Reacquired Debt

This account shall include the losses on long-term debt reacquired or redeemed. The amounts in this account shall be amortized in accordance with § 1767.15 (q).

190 Accumulated Deferred Income Taxes

A. This account shall be debited and Account 411.1, Provision for Deferred Income Taxes—Credit, Utility Operating Income, or Account 411.2, Provision for Deferred Income Taxes—Credit, Other Income and Deductions, as appropriate, shall be credited with an amount equal to that by which income taxes payable for the year are higher because of the inclusion of certain items in income for tax purposes, which items for general accounting purposes will not be fully reflected in the utility's determination of annual net income until subsequent years.

B. This account shall be credited and Account 410.1, Provision for Deferred Income Taxes, Utility Operating Income, or Account 410.2, Provision for Deferred Income Taxes, Other Income and Deductions, as appropriate, shall be debited with an amount equal to that by which income taxes payable for the year are lower because of prior payment of taxes as provided by Paragraph A above, because of difference in timing for tax purposes of particular items of income or income deductions from that recognized by the utility for general accounting purposes. Such credit to this account and debit to Account 410.1 or Account 410.2 shall, in general, represent the effect on taxes payable in the current year of the smaller amount of book income recognized for tax purposes as compared to the amount recognized in the utility's current accounts with respect to the item or class of items for which deferred tax accounting by the utility was authorized by RUS.

C. Vintage year records with respect to entries to this account, as described above, and the account balance, shall be so maintained as to show the factor of calculation with respect to each annual amount of the item or class of items for which deferred tax accounting by the utility is utilized.

D. The utility is restricted in its use of this account to the purpose set forth above. It shall not make use of the balance in this account or any portion thereof except as provided in the text of this account, without prior approval of RUS. Any remaining deferred tax account balance with respect to an amount for any prior year's tax deferral, the amortization of which or other recognition in the utility's income accounts has been completed, or other disposition made, shall be debited to Account 410.1, Provision for Deferred Income Taxes, Utility Operating Income, or Account 410.2, Provision for Deferred Income Taxes, Other Income and Deductions, as appropriate, or otherwise disposed of as RUS may authorize or direct. (See § 1767.15 (t).)

[58 FR 59825, Nov. 10, 1993, as amended at 59 FR 27436, May 27, 1994; 60 FR 55429, 55430, Nov. 1, 1995]

§ 1767.19 Liabilities and other credits.

The liabilities and other credit accounts identified in this section shall be used by all RUS borrowers.

LIABILITIES AND OTHER CREDITS

Margins and Equities

200 Memberships
200.1 Memberships Issued
200.2 Memberships Subscribed But Unissued
201 Patronage Capital
201.1 Patronage Capital Credits
201.2 Patronage Capital Assignable
202 [Reserved]
203 [Reserved]
204 [Reserved]
205 [Reserved]
206 [Reserved]
207 [Reserved]
208 Donated Capital
209 [Reserved]
210 [Reserved]
211 Consumers' Contributions for Debt Service
212 [Reserved]
213 [Reserved]
214 [Reserved]
215 Appropriated Margins
215.1 Unrealized Gains and Losses—Debt and Equity Securities
216 [Reserved]

216.1 Unappropriated Undistributed Subsidiary Earnings
217 Retired Capital Credits—Gain
218 Capital Gains and Losses
219 Other Margins and Equities
219.1 Operating Margins
219.2 Nonoperating Margins
219.3 Other Margins
219.4 Other Margins and Equities—Prior Periods

Long-Term Debt

221 Bonds
222 Reacquired Bonds
223 Advances from Associated Companies
224 Other Long-Term Debt
224.1 Long-Term Debt—RUS Construction Loan Contract
224.2 RUS Loan Contract—Construction—Debit
224.3 Long-Term Debt—RUS Construction Notes Executed
224.4 RUS Notes Executed—Construction—Debit
224.5 Interest Accrued—Deferred—RUS Construction
224.6 Advance Payments Unapplied—RUS Long-Term Debt—Debit
224.7 Long-Term Debt—Installation Loan Contract
224.8 RUS Loan Contract—Installation—Debit
224.9 Long-Term Debt—Installation Notes Executed
224.10 RUS Notes Executed—Installation—Debit
224.11 Other Long-Term Debt—Subscriptions
224.12 Other Long-Term Debt—Supplemental Financing
224.13 Supplemental Financing Notes Executed—Debit
224.14 Other Long-Term Debt—Miscellaneous
224.15 Notes Executed—Other—Debit
224.16 Long-Term Debt—RUS Economic Development Notes Executed
224.17 RUS Notes Executed—Economic Development—Debit
225 Unamortized Premium on Long-Term Debt
226 Unamortized Discount on Long-Term Debt—Debit

Other Noncurrent Liabilities

227 Obligations Under Capital Leases—Noncurrent
228.1 Accumulated Provision for Property Insurance
228.2 Accumulated Provision for Injuries and Damages
228.3 Accumulated Provision for Pensions and Benefits
228.4 Accumulated Miscellaneous Operating Provisions
229 Accumulated Provision for Rate Refunds

Current and Accrued Liabilities

231 Notes Payable
232 Accounts Payable
232.1 Accounts Payable—General
232.2 Accounts Payable—RUS Construction
232.3 Accounts Payable—Other
233 Notes Payable to Associated Companies
234 Accounts Payable to Associated Companies
235 Customer Deposits
236 Taxes Accrued
236.1 Accrued Property Taxes
236.2 Accrued U.S. Social Security Tax—Unemployment
236.3 Accrued U.S. Social Security Tax—F.I.C.A.
236.4 Accrued State Social Security Tax—Unemployment
236.5 Accrued State Sales Tax—Consumers
236.6 Accrued Gross Revenue or Gross Receipts Tax
236.7 Accrued Taxes—Other
237 Interest Accrued
238 Patronage Capital and Patronage Refunds Payable
238.1 Patronage Capital Payable
238.2 Patronage Refunds Payable
239 Matured Long-Term Debt
240 Matured Interest
241 Tax Collections Payable
242 Miscellaneous Current and Accrued Liabilities
242.1 Accrued Rentals
242.2 Accrued Payroll
242.3 Accrued Employees' Vacations and Holidays
242.4 Accrued Insurance
242.5 Other Current and Accrued Liabilities
243 Obligations Under Capital Leases—Current

Deferred Credits

251 [Reserved]
252 Customer Advances for Construction
253 Other Deferred Credits
253.1 Other Deferred Credits—Consumers' Energy Prepayments
254 Other Regulatory Liabilities
255 Accumulated Deferred Investment Tax Credits
256 Deferred Gains from Disposition of Utility Plant
257 Unamortized Gain on Reacquired Debt
281 Accumulated Deferred Income Taxes—Accelerated Amortization Property
282 Accumulated Deferred Income Taxes—Other Property
283 Accumulated Deferred Income Taxes—Other

LIABILITIES AND OTHER CREDITS

Margins and Equities

200 Memberships

A. This account shall include the total amount of memberships issued and subscribed.

B. Account 200 shall be subaccounted as follows:

200.1 Memberships Issued
200.2 Memberships Subscribed But Unissued

200.1 Memberships Issued

A. This account shall include the face value of membership certificates outstanding. A detailed record shall be maintained to show for each member, the name, address, date of payment, amount paid, and certificate number.

B. If membership fees are applied against energy bills, this account shall be debited for the full amount of the membership with the offsetting credit to the appropriate accounts receivable, and to accounts payable for any refundable amounts. Any balances that cannot be refunded, due to inability to locate the member or because of bylaw restrictions, shall be credited to Account 208, Donated Capital. If determination of the ultimate disposition of the fees cannot be made immediately, the amount involved should be transferred to Account 253, Other Deferred Credits, until the determination is made.

C. When a transfer fee is collected, the transaction shall be recorded by debiting Account 131.1, Cash—General, and crediting Account 451, Miscellaneous Service Revenues, with the fee collected.

200.2 Memberships Subscribed But Unissued

This account shall include the face value of memberships subscribed for but not issued. When certificates are issued, the amount of the memberships shall be transferred to Account 200.1, Memberships Issued.

201 Patronage Capital

A. This account shall include the total amount of patronage capital assignable and assigned.

B. Account 201 shall be subaccounted as follows:

201.1 Patronage Capital Credits
201.2 Patronage Capital Assignable

201.1 Patronage Capital Credits

A. This account shall include the amounts of patronage capital which have been assigned to individual patrons. A subsidiary record, ''patronage capital ledger,'' shall be maintained, containing an account for each patron who has furnished capital under a capital credits plan.

B. When the return of patrons' capital to individual patrons has been authorized by the board of directors (or trustees), the amounts authorized shall be transferred to Account 238.1, Patronage Capital Payable. (See also Account 217, Retired Capital Credits-Gain.)

201.2 Patronage Capital Assignable

A. This account shall include all amounts transferred from Account 219.1, Operating Margins; Account 219.2, Nonoperating Margins; Account 219.3, Other Margins; and Account 219.4, Other Margins and Equities—Prior Periods, which are assignable to individual patrons' capital accounts.

B. Entries to this account shall be made so as to clearly disclose the nature and source of each transaction. Amounts so assigned shall be transferred to Account 201.1, Patronage Capital Credits.

202 [Reserved]

203 [Reserved]

204 [Reserved]

205 [Reserved]

206 [Reserved]

207 [Reserved]

208 Donated Capital

This account shall include credits arising from forfeiture of membership fees and from donations of capital not otherwise provided for. Entries to this account shall be made so as to clearly disclose the nature and source of each transaction.

209 [Reserved]

210 [Reserved]

211 Consumers' Contributions for Debt Service

This account shall include the amounts billed to consumers as ''amortization charges'' for the purpose of servicing long-term debt.

212 [Reserved]

213 [Reserved]

214 [Reserved]

215 Appropriated Margins

This account shall include all amounts appropriated as reserves from margins. The account shall be so maintained as to show the amount of each separate reserve and the nature and amounts of the debits and credits thereto.

215.1 Unrealized Gains and Losses—Debt and Equity Securities

This account shall include the unrealized holding gains and losses for available-for-sale securities.

216 [Reserved]

216.1 Unappropriated Undistributed Subsidiary Earnings

This account shall include the balances, either debit or credit, of undistributed retained earnings of subsidiary companies since their acquisition. When dividends are received from subsidiary companies relating to amounts included in this account, this account shall be debited and Account 219.2, Nonoperating Margins, credited.

217 Retired Capital Credits—Gain

A. This account shall include credits resulting from the retirement of patronage capital through settlement of individual patrons' capital credits at less than 100 percent of the capital assigned to the patron. The portion of patronage capital not returned to the patrons, under such settlements, shall be debited to Account 201.1, Patronage Capital Credits, and credited to this account.

B. This account shall also include amounts representing patronage capital authorized to be retired to patrons who cannot be located. Returned checks issued for retirements of patronage capital, after an appropriate waiting period, shall be credited to this account, and a record maintained adequate to enable the cooperative to make payment to the patron if and when a claim has been established by the consumer.

218 Capital Gains and Losses

No entries shall be made to this account without the prior approval of RUS unless it is to distribute past capital gains and losses as capital credits or to eliminate accumulated capital losses in conformance with the bylaws of the cooperative.

219 Other Margins and Equities

A. This account shall include total amount of margins and equities from all sources.

B. Account 219 shall be subaccounted as follows:

219.1 Operating Margins
219.2 Nonoperating Margins
219.3 Other Margins
219.4 Other Margins and Equities—Prior Periods

219.1 Operating Margins

This account shall be debited or credited with the balances arising from transactions, the details of which have been recorded in Accounts 400, 401, 402, 403, 404, 405, 406, 407, 408, 412, 413, 414, 423, 424, 425, 426, 427, 428, and 431. Accounts 400, 401, and 402 are control accounts and, at the option of the borrower may or may not be used. If they are not used, the detailed revenue and expense accounts shall be closed directly to this account.

219.2 Nonoperating Margins

This account shall be debited or credited with the balances arising from transactions, the details of which have been recorded in Accounts 415, 416, 417, 417.1, 418, 419, 419.1, 421, 421.1, 421.2, 422, 434, and 435.

219.3 Other Margins

No entries shall be made to this account unless it is to distribute or eliminate prior balances in conformance with the bylaws of the cooperative.

219.4 Other Margins and Equities—Prior Periods

A. This account shall include significant nonrecurring transactions relating to prior periods. To be significant, the transaction must be of sufficient magnitude to justify redistribution of patronage capital credits already allocated for such prior periods.

B. All entries to this account must receive RUS prior approval.

C. These transactions are limited to items to (1) correct an error in the financial statements of a prior year, and (2) make adjustments that result from realization of income tax benefits of preacquisition operating loss carryforwards. This account shall also include the related income taxes (state and Federal) on items included herein.

D. Amounts in this account shall be transferred at the end of the year to Account 219.1, Operating Margins, or Account 219.2, Nonoperating Margins, as appropriate. Also, at the end of the year, these amounts should be transferred from Account 219.1, or Account 219.2 to Account 201.2, Patronage Capital Assignable, when appropriate.

Long-Term Debt

221 Bonds

This account shall include, in a separate subdivision for each class and series of bonds, the face value of the actually issued and unmatured bonds which have not been retired or cancelled; also the face value of such bonds issued by others, the payment of which has been assumed by the utility.

222 Reacquired Bonds

A. This account shall include the face value of bonds actually issued or assumed by the utility and reacquired by it and not retired or cancelled. The account for reacquired debt shall not include securities which are held by trustees in sinking or other funds.

B. When bonds are reacquired, the difference between face value, adjusted for unamortized discount, expenses or premium, and the amount paid upon reacquisition, shall be included in Account 189, Unamortized Loss on Reacquired Debt, or Account 257, Unamortized Gain on Reacquired Debt, as appropriate. (See §1767.15 (q).)

223 Advances from Associated Companies

A. This account shall include the face value of notes payable to associated companies and the amount of open book accounts representing advances from associated companies. It does not include notes and open accounts representing indebtedness subject to current settlement which are includible in Account 233, Notes Payable to Associated Companies, or Account 234, Accounts Payable to Associated Companies.

B. The records supporting the entries to this account shall be so kept that the utility can furnish complete information concerning each note and open account.

224 Other Long-Term Debt

A. This account shall include, until maturity, all long-term debt not otherwise provided for. This covers such items as receivers' certificates, real estate mortgages executed or assumed, assessments for public improvements, notes and unsecured certificates of indebtedness not owned by associated companies, receipts outstanding for long-term debt, and other obligations maturing more than one year from the date of issue or assumption.

B. Account 224 shall be subaccounted as follows:

224.1 Long-Term Debt—RUS Construction Loan Contract
224.2 RUS Loan Contract—Construction—Debit
224.3 Long-Term Debt—RUS Construction Notes Executed
224.4 RUS Notes Executed—Construction—Debit
224.5 Interest Accrued—Deferred—RUS Construction
224.6 Advance Payments Unapplied—RUS Long-Term Debt—Debit
224.7 Long-Term Debt—Installation Loan Contract
224.8 RUS Loan Contract—Installation—

Debit
224.9 Long-Term Debt—Installation Notes Executed
224.10 RUS Notes Executed—Installation—Debit
224.11 Other Long-Term Debt—Subscriptions
224.12 Other Long-Term Debt—Supplemental Financing
224.13 Supplemental Lender Notes Executed—Debit
224.14 Other Long-Term Debt—Miscellaneous
224.15 Notes Executed—Other—Debit
224.16 Long-Term Debt—RUS Economic Development Notes Executed
224.17 RUS Notes Executed—Economic Development—Debit

224.1 Long-Term Debt—RUS Construction Loan Contract

A. This account shall include the contractual obligation to RUS on construction loans covered by loan contract but not by executed notes.

B. This account is to be used at the option of the borrower.

224.2 RUS Loan Contract—Construction—Debit

A. This account shall include the total loans (for construction purposes) which are covered by loan contract but not by executed notes.

B. This account is to be used at the option of the borrower.

224.3 Long-Term Debt—RUS Construction Notes Executed

This account shall include the contractual liability to RUS on construction notes executed. Records shall be maintained to show separately for each class of obligation all details as to the date of obligation, date of maturity, interest date and rate, and securities for the obligation.

224.4 RUS Notes Executed—Construction—Debit

This account shall include the total amount of the unadvanced RUS loans for construction purposes, which are covered by executed notes. When advances are received from the RUS for construction, this account shall be credited and Account 131.2, Cash—Construction Fund—Trustee, debited with the amount of cash advanced.

224.5 Interest Accrued—Deferred—RUS Construction

This account shall include interest on RUS construction obligations deferred by the terms of mortgage notes or extension agreements.

224.6 Advance Payments Unapplied—RUS Long-Term Debt—Debit

A. This account shall include principal payments on mortgage notes paid in advance of the date due and not applied to a specific note. Also, include in this account interest savings which are accrued and added to the advance payment unapplied.

B. At such time as these payments are applied to a specific note or loan balances, this account shall be credited and the long-term debt account debited with the amount so applied.

224.7 Long-Term Debt—Installation Loan Contract

A. This account shall include the contractual obligation to RUS on installation loans covered by loan contract but not covered by executed notes.

B. This account is to be used at the option of the borrower.

224.8 RUS Loan Contract—Installation—Debit

A. This account shall include the total loans for installation purposes which are covered by loan contract but not by executed notes.

B. This account is to be used at the option of the borrower.

224.9 Long-Term Debt—Installation Notes Executed

This account shall include the contractual liability to RUS on installation notes executed.

224.10 RUS Notes Executed—Installation—Debit

This account shall include the total amount of unadvanced loans for installation purposes, which are covered by executed note. When advances are received from RUS, this account shall be credited and Account 131.3, Cash—Installation Loan and Collection Fund,

debited with the amount of cash advanced.

224.11 Other Long-Term Debt—Subscriptions

This account shall include the contractual obligation to purchase CFC Capital Term Certificates and any other similar obligation relating to supplemental financing.

224.12 Other Long-Term Debt—Supplemental Financing

This account shall include the contractual liability to CFC or other supplemental lenders for that portion of funds borrowed which mature in more than one year.

224.13 Supplemental Financing Notes Executed—Debit

This account shall include the total amount of the unadvanced loans for construction purposes, which are covered by executed notes to CFC or other supplemental lender. This account shall be debited with the face amount of notes executed. When advances are received from a supplemental lender for construction, this account shall be credited and Account 131.2, Cash—Construction Fund—Trustee, debited with the amount of cash advanced.

224.14 Other Long-Term Debt—Miscellaneous

This account shall include the amount of other long-term debt not provided for elsewhere.

224.15 Notes Executed—Other—Debit

This account shall include the total amount of the unadvanced loans for construction purposes, which are covered by executed notes to others not included in the foregoing accounts. When advances are received from such supplemental lender, this account shall be credited and Account 131.2, Cash—Construction Fund—Trustee, debited with the amount of cash so advanced.

224.16 Long-Term Debt—RUS Economic Development Notes Executed

This account shall include the contractual liability to RUS on rural economic development notes executed. Records shall be maintained to show separately for each class of obligation all details as to the date of obligation, date of maturity, interest date and rate, and securities for the obligation.

224.17 RUS Notes Executed—Economic Development—Debit

This account shall include the total amount of the unadvanced RUS loans for rural economic development purposes, which are covered by executed notes. When advances are received from the RUS for rural economic development projects, this account shall be credited and Account 131.12, Cash—General—Economic Development Funds, debited with the amount of cash advanced.

225 Unamortized Premium on Long-Term Debt

A. This account shall include the excess of the cash value of consideration received over the face value upon the issuance or assumption of long-term debt securities.

B. Amounts recorded in this account shall be amortized over the life of each respective issue under a plan which will distribute the amount equitably over the life of the security. The amortization shall be on a monthly basis, with the amounts thereof to be credited to Account 429, Amortization of Premium on Debt—Credit. (See §1767.15 (q).)

226 Unamortized Discount on Long-Term Debt—Debit

A. This account shall include the excess of the face value of long-term debt securities over the cash value of consideration received therefor, related to the issue or assumption of all types and classes of debt.

B. Amounts recorded in this account shall be amortized over the life of the respective issues under a plan which will distribute the amount equitably over the life of the securities. The amortization shall be on a monthly basis, wit the amounts thereof charged to Account 428, Amortization of Debt Discount and Expense. (See §1767.15 (q).)

Other Noncurrent Liabilities

227 Obligations Under Capital Leases—Noncurrent

This account shall include the portion not due within one year, of the obligations recorded for the amounts applicable to leased property recorded as assets in Account 101.1, Property Under Capital Leases; Account 120.6, Nuclear Fuel Under Capital Leases; or Account 121, Nonutility Property.

SPECIAL INSTRUCTIONS

No amounts shall be credited to Accounts 228.1 through 228.4 unless authorized by a regulatory authority or authorities to be collected in the utility's rates.

228.1 Accumulated Provision for Property Insurance

A. This account shall include amounts reserved by the utility for losses through accident, fire, flood, or other hazards to its own property or property leased from others, not covered by insurance. The amounts charged to Account 924, Property Insurance, or other appropriate accounts to cover such risks shall be credited to this account. A schedule of risks covered shall be maintained, giving a description of the property involved, the character of the risks covered and the rates used.

B. Charges shall be made to this account for losses covered, not to exceed the account balance. Details of these charges shall be maintained according to the year the casualty occurred which gave rise to the loss.

228.2 Accumulated Provision for Injuries and Damages

A. This account shall be credited with amounts charged to Account 925, Injuries and Damages, or other appropriate accounts, to meet the probable liability, not covered by insurance, for deaths or injuries to employees and others and for damages to property neither owned nor held under lease by the utility.

B. When liability for any injury or damage is admitted by the utility either voluntarily or because of the decision of a court or other lawful authority, such as a workmen's compensation board, the admitted liability shall be charged to this account and credited to the appropriate current liability account. Details of these charges shall be maintained according to the year the casualty occurred which gave rise to the loss.

NOTE: Recoveries or reimbursements for losses charged to this account shall be credited hereto; the cost of repairs to property of others, if provided for herein, shall be charged to this account.

228.3 Accumulated Provision for Pensions and Benefits

A. This account shall include provisions made by the utility and amounts contributed by employees for pensions, accident and death benefits, savings, relief, hospital, and other provident purposes, where the funds are included in the assets of the utility either in general or in segregated fund accounts.

B. Amounts paid by the utility for the purpose for which this liability is established shall be charged hereto.

C. A separate account shall be kept for each kind of provision included herein.

NOTE: If employee pension or benefit plan funds are not included among the assets of the utility but are held by outside trustees, payments into such funds, or accruals therefor, shall not be included in this account.

228.4 Accumulated Miscellaneous Operating Provisions

A. This account shall include all operating provisions which are not provided for elsewhere.

B. This account shall be maintained in such a manner as to show the amount of each separate provision and the nature and amounts of the debits and credits thereto.

NOTE: This account includes only provisions as may be created for operating purposes and does not include any reservations of income, the credits for which should be recorded in Account 215, Appropriated Margins.

229 Accumulated Provision for Rate Refunds

A. This account shall be credited with amounts charged to Account 449.1, Provision for Rate Refunds, to provide

for estimated refunds where the utility is collecting amounts in rates subject to refund.

B. When a refund of any amount recorded in this account is ordered by a regulatory authority, such amount shall be charged hereto and credited to Account 242, Miscellaneous Current and Accrued Liabilities.

C. Records supporting the entries to this account shall be kept so as to identify each amount recorded by the respective rate filing docket number.

Current and Accrued Liabilities

Current and accrued liabilities are those obligations which have either matured or which become due within 1 year from the date thereof; except however, bonds, receivers' certificates, and similar obligations which shall be classified as long-term debt until date of maturity; accrued taxes, such as income taxes, which shall be classified as accrued liabilities even though payable more than one year from date; compensation awards, which shall be classified as current liabilities regardless of date due; and minor amounts payable in installments which may be classified as current liabilities. If a liability is due more than 1 year from the date of issuance or assumption by the utility, it shall be credited to a long-term debt account appropriate for the transaction; except however, the current liabilities previously mentioned.

231 Notes Payable

This account shall include the face value of all notes, drafts, acceptances, or other similar evidences of indebtedness, payable on demand or within a time not exceeding 1 year from the date of issue, to other than associated companies.

232 Accounts Payable

A. This account shall include all amounts payable by the utility within 1 year, which are not provided for in other accounts.

B. Account 232 shall be subaccounted as follows:

232.1 Accounts Payable—General
232.2 Accounts Payable—RUS Construction
232.3 Accounts Payable—Other

233 Notes Payable to Associated Companies

This account shall include amounts owing to associated companies on notes, drafts, acceptances, or other similar evidences of indebtedness payable on demand or not more than 1 year from the date of issue or creation.

NOTE: Notes which are includible in Account 223, Advances from Associated Companies, shall be excluded from this account.

234 Accounts Payable to Associated Companies

This account shall include amounts owing to associated companies on open accounts payable on demand.

NOTE: Accounts which are includible in Account 223, Advances from Associated Companies, shall be excluded from this account.

235 Customer Deposits

This account shall include all amounts deposited with the utility by its customers as security for the payment of bills.

236 Taxes Accrued

A. This account shall be credited with the amount of taxes accrued during the accounting period, corresponding debits being made to the appropriate accounts for tax charges. Such credits may be based upon estimates, but from time to time during the year as the facts become known, the amount of the periodic credits shall be adjusted so as to include, as nearly as can be determined in each year, the taxes applicable thereto. Any amount representing a prepayment of taxes applicable to the period subsequent to the date of the balance sheet, shall be shown under Account 165, Prepayments.

B. If accruals for taxes are found to be insufficient or excessive, correction therefor shall be made through current tax accruals.

C. Accruals for taxes shall be based upon the net amounts payable after credit for any discounts, and shall not include any amounts for interest on tax deficiencies or refunds. Interest received on refunds shall be credited to Account 419, Interest and Dividend Income, and interest paid on deficiencies

shall be charged to Account 431, Other Interest Expense.

D. Account 236 shall be subaccounted as follows:

236.1 Accrued Property Taxes
236.2 Accrued U.S. Social Security Tax—Unemployment
236.3 Accrued U.S. Social Security Tax—F.I.C.A.
236.4 Accrued State Social Security Tax—Unemployment
236.5 Accrued State Sales Tax—Consumers
236.6 Accrued Gross Revenue or Gross Receipts Tax
236.7 Accrued Taxes—Other

237 Interest Accrued

This account shall include the amount of interest accrued but not matured on all liabilities of the utility not including, however, interest which is added to the principal of the debt on which incurred. Supporting records shall be maintained so as to show the amount of interest accrued on each obligation.

238 Patronage Capital and Patronage Refunds Payable

A. This account shall include the total amount of patronage capital authorized to be returned and paid to patrons.

B. Account 238 shall be subaccounted as follows:

238.1 Patronage Capital Payable
238.2 Patronage Refunds Payable

238.1 Patronage Capital Payable

This account shall include the amount of patronage capital which has been authorized to be returned to the patron.

238.2 Patronage Refunds Payable

This account shall include the amount of patronage refunds which have been authorized to be paid to patrons.

239 Matured Long-Term Debt

This account shall include the amount of long-term debt (including any obligation for premiums) matured and unpaid, without specific agreement for extension of the time of payment and bonds called for redemption but not presented.

240 Matured Interest

This account shall include the amount of matured interest on long-term debt or other obligations of the utility at the date of the balance sheet unless such interest is added to the principal of the debt on which incurred.

241 Tax Collections Payable

This account shall include the amount of taxes collected by the utility through payroll deductions or otherwise, pending transmittal of such taxes to the proper taxing authority.

NOTE: Do not include liabilities for taxes assessed directly against the utility which are accounted for as part of the utility's own tax expense.

242 Miscellaneous Current and Accrued Liabilities

A. This account shall include the amount of all other current and accrued liabilities not provided for elsewhere appropriately designated and supported so as to show the nature of each liability.

B. Account 242 shall be subaccounted as follows:

242.1 Accrued Rentals
242.2 Accrued Payroll
242.3 Accrued Employees' Vacations and Holidays
242.4 Accrued Insurance
242.5 Other Current and Accrued Liabilities

242.1 Accrued Rentals

This account shall include unpaid joint use pole rentals and other rentals. The records supporting the entries to this account shall be maintained so as to show for each class of rental, the amount accrued, the basis for the accrual, the accounts to which charged, and the amount of rentals paid.

242.2 Accrued Payroll

This account shall include the accrued liability for salaries and wages at the end of an accounting period for which the appropriate expense or other accounts have been charged. This account is to be used whether salaries and wages are paid on a weekly, semimonthly, or monthly basis.

242.3 Accrued Employees' Vacations and Holidays

This account shall include the liability for accrued wages for employees' vacation, holidays, and sick leave.

242.4 Accrued Insurance

A. This account shall most commonly be used in case of workmen's compensation and public liability insurance for recording the excess amounts of earned premium over the advance premiums. Earned premiums are computed each month by applying the insurance rates to the actual payrolls.

B. Until the amount of the advance premiums is exhausted, the earned premium is credited to Account 165, Prepayments. Earned premiums in excess of the advance premiums are credited to this account.

242.5 Other Current and Accrued Liabilities

This account shall include current and accrued liabilities not provided for elsewhere.

243 Obligations Under Capital Leases—Current

This account shall include the portion, due within 1 year, of the obligations recorded for the amounts applicable to leased property recorded as assets in Account 101.1, Property Under Capital Leases; Account 120.6, Nuclear Fuel Under Capital Leases; or Account 121, Nonutility Property.

Deferred Credits

251 [Reserved]

252 Customer Advances for Construction

This account shall include consumer advances for construction which are to be refunded either wholly or in part. When a customer is refunded the entire amount to which he is entitled, according to the agreement or rule under which the advance was made, the balance, if any, remaining in this account shall be credited to the respective plant accounts.

253 Other Deferred Credits

This account shall include advance billings and receipts and other deferred credit items, not provided for elsewhere, including amounts which cannot be entirely cleared or disposed of until additional information has been received.

253.1 Other Deferred Credits—Consumers' Energy Prepayments

This account shall include the amount of advance payments made by consumers in connection with electric service.

254 Other Regulatory Liabilities

A. This account shall include the amounts of regulatory liabilities, not includible in other accounts, imposed on the utility by the ratemaking actions of regulatory agencies.

B. The amounts included in this account are to be established by those credits which would have been included in net income determinations in the current period under the general requirements of the Uniform System of Accounts but for it being probable that: (1) such items will be included in a different period(s) for purposes of developing the rates that the utility is authorized to charge for its utility services; or (2) refunds to customers, not provided for in other accounts, will be required. When specific identification of the particular source of the regulatory liability cannot be made or when the liability arises from revenues collected pursuant to tariffs on file at a regulatory agency, Account 407.3, Regulatory Debits, shall be debited. The amounts recorded in this account generally are to be credited to the same account that would have been credited if included in income when earned except: (1) all regulatory liabilities established through the use of Account 407.3 shall be credited to Account 407.4, Regulatory Credits; and (2) in the case of refunds, a cash account or other appropriate account should be credited when the obligation is satisfied.

C. If it is later determined that the amounts recorded in this account will not be returned to customers through rates or refunds, such amounts shall be credited to Account 421, Miscellaneous

Nonoperating Income, or Account 434, Extraordinary Income, as appropriate, in the year such determination is made.

D. The records supporting the entries to this account shall be kept in such a manner that the utility can furnish full information as to the nature and amount of each regulatory liability included in this account, including justification for inclusion of such amounts in this account.

255 Accumulated Deferred Investment Tax Credits

A. This account shall be credited with all investment tax credits deferred by companies which have elected to follow deferral accounting, partial or full, rather than recognizing, in the income statement, the total benefits of the tax credit as realized. After such election, a company may not transfer amounts from this account, except as authorized herein and in Account 411.4, Investment Tax Credit Adjustments, Utility Operations; Account 411.5, Investment Tax Credit Adjustments, Nonutility Operations; and Account 420, Investment Tax Credits, or with approval of RUS.

B. Where the company's accounting provides that investment tax credits are to be passed on to customers, this account shall be debited and Account 411.4 credited with a proportionate amount determined in relation to the average useful life of electric utility property to which the tax credits relate or such lesser period of time as allowed by a regulatory agency having rate jurisdiction. If, however, the deferral procedure provides that investment tax credits are not to be passed on to customers, the proportionate restorations to income shall be credited to Account 420.

C. Subdivisions of this account, by department, shall be maintained for deferred investment tax credits that are related to nonelectric utility or other operations. Contra entries affecting such account subdivisions shall be appropriately recorded in Account 413, Expenses of Electric Plant Leased to Others; or Account 414, Other Utility Operating Income. Use of deferral or nondeferral accounting procedures adopted for nonelectric utility or other operations are to be followed on a consistent basis.

D. Separate records for electric and nonelectric utility or other operations shall be maintained identifying the properties giving rise to the investment tax credits for each year with the weighted-average service life of such properties and any unused balances of such credits. Such records are not necessary unless the tax credits are deferred.

256 Deferred Gains from Disposition of Utility Plant

This account shall include gains from the sale or other disposition of property previously recorded in Account 105, Electric Plant Held for Future Use, under the provisions of Paragraphs B, C, and D thereof, where such gains are significant and are to be amortized over a period of 5 years, unless otherwise authorized by RUS. The amortization of the amounts in this account shall be made by credits to Account 411.6, Gains from Disposition of Utility Plant. (See Account 105, Electric Plant Held for Future Use.)

257 Unamortized Gain on Reacquired Debt

This account shall include the amounts of discount realized upon reacquisition or redemption of long-term debt. The amounts in this account shall be amortized in accordance with § 1767.15 (q).

SPECIAL INSTRUCTIONS

Accumulated Deferred Income Taxes

Before using the deferred tax accounts provided below, refer to § 1767.15 (r), Comprehensive Interperiod Income Tax Allocation. The text of these accounts are designed primarily to cover deferrals of Federal income taxes. However, they are also to be used when making deferrals of state and local income taxes. Utilities and licensees which, in addition to an electric utility department, have another utility department, gas or water and nonutility property, and which have deferred taxes on income with respect thereto shall separately classify such deferrals in the accounts provided below so as to

allow ready identification of items relating to each utility deductions.

281 Accumulated Deferred Income Taxes—Accelerated Amortization Property

A. This account shall include tax deferrals resulting from adoption of the principles of comprehensive interperiod tax allocation described in § 1767.15 (s) that relate to property for which the utility has availed itself of the use of accelerated (5-year) amortization of (1) certified defense facilities as permitted by Section 168 of the Internal Revenue Code, and (2) certified pollution control facilities as permitted by Section 169 of the Internal Revenue Code.

B. This account shall be credited and Account 410.1, Provision for Deferred Income Taxes, Utility Operating Income, or Account 410.2, Provision for Deferred Income Taxes, Other Income and Deductions, as appropriate, shall be debited with tax effects related to property described in Paragraph A above where taxable income is lower than pretax accounting income due to differences between the periods in which revenue and expense transactions affect taxable income and the periods in which they enter into the determination of pretax accounting income.

C. This account shall be debited and Account 411.1, Provision for Deferred Income Taxes—Credit, Utility Operating Income, or Account 411.2, Provision for Deferred Income Taxes-Credit, Other Income and Deductions, as appropriate, shall be credited with taxes related to property described in Paragraph A above where taxable income is higher than pretax accounting income due to differences between the periods in which revenue and expense transactions affect taxable income and the periods in which they enter into the determination of pretax accounting income.

D. The utility is restricted in its use of this account to the purposes set forth above. It shall not transfer the balance in this account or any portion thereof to retained earnings or make any use thereof except as provided in the text of this account without prior approval of RUS. Upon the disposition by sale, exchange, transfer, abandonment, or premature retirement of plant on which there is a related balance therein, this account shall be charged with an amount equal to the related income tax expense, if any, arising from such disposition and Account 411.1, Provision for Deferred Income Taxes—Credit, Utility Operating Income, or Account 411.2, Provision for Deferred Income Taxes—Credit, Other Income and Deductions, as appropriate, shall be credited. When the remaining balance, after consideration of any related income tax expense, is less than $25,000, this account shall be charged and Account 411.1 or Account 411.2, as appropriate, credited with such balance. If after consideration of any related income tax expense, there is a remaining amount of $25,000 or more, RUS shall authorize or direct how such amount shall be accounted for at the time approval for the disposition of accounting is granted. When plant is disposed of by transfer to a wholly owned subsidiary, the related balance in this account shall also be transferred. When the disposition relates to retirement of an item or items under a group method of depreciation where there is no tax effect in the year of retirement, no entries are required in this account if it can be determined that the related balances would be necessary to be retained to offset future group item tax deficiencies.

282 Accumulated Deferred Income Taxes—Other Property

A. This account shall include the tax deferrals resulting from adoption of the principle of comprehensive interperiod income tax allocation described in § 1767.15 (r) which are related to all property other than accelerated amortization property.

B. This account shall be credited and Account 410.1, Provision for Deferred Income Taxes, Utility Operating Income, or Account 410.2, Provision for Deferred Income Taxes, Other Income and Deductions, as appropriate, shall be debited with tax effects related to property described in Paragraph A above where taxable income is lower than pretax accounting income due to differences between the periods in which revenue and expense transactions affect taxable income and the

periods in which they enter into the determination of pretax accounting income.

C. This account shall be debited and Account 411.1, Provision for Deferred Income Taxes—Credit, Utility Operating Income, or Account 411.2, Provision for Deferred Income Taxes—Credit, Other Income and Deductions, as appropriate, shall be credited with tax effects related to property described in Paragraph A above where taxable income is higher than pretax accounting income due to differences between the periods in which revenue and expense transactions affect taxable income and the periods in which they enter into the determination of pretax accounting income.

D. The utility is restricted in its use of this account to the purposes set forth above. It shall not transfer the balance in this account or any portion thereof to retained earnings or make any use thereof except as provided in the text of this account without prior approval of RUS. Upon the disposition by sale, exchange, transfer, abandonment, or premature retirement of plant on which there is a related balance herein, this account shall be charged with an amount equal to the related income tax expense, if any, arising from such disposition and Account 411.1, Provision for Deferred Income Taxes—Credit, Utility Operating Income, or Account 411.2, Provision for Deferred Income Taxes—Credit, Other Income and Deductions, shall be credited. When the remaining balance after consideration of any related tax expenses, is less than $25,000, this account shall be charged and Account 411.1 or Account 411.2, as appropriate, credited with such balance. If after consideration any related income tax expense, there a remaining amount of $25,00 or more, RUS shall authorize or direct how such amount shall be accounted for at the time approval for the disposition of accounting is granted. When plant is disposed of by transfer to a wholly owned subsidiary, the related balance in this account shall also be transferred. When the disposition relates to retirement of an item or items under a group method of depreciation where there is no tax effect in the year of retirement, no entries are required in this account if it can be determined that the related balance would be necessary to be retained to offset future group item tax deficiencies.

283 Accumulated Deferred Income Taxes—Other

A. This account shall include all credit tax deferrals resulting from the adoption of the principles of comprehensive interperiod income tax allocation described in § 1767.15 (r) other than those deferrals which are includible in Account 281, Accumulated Deferred Income Taxes—Accelerated Amortization Property, and Account 282, Accumulated Deferred Income Taxes—Other Property.

B. This account shall be credited and Account 410.1, Provision for Deferred Income Taxes, Utility Operating Income, or Account 410.2, Provision for Deferred Income Taxes, Other Income and Deductions, as appropriate, shall be debited with tax effects related to items described in Paragraph A above where taxable income is lower than pretax accounting income due to differences between the periods in which revenue and expense transactions affect taxable income and the periods in which they enter into the determination of pretax accounting income.

C. This account shall be debited and Account 411.1, Provision for Deferred Income Taxes—Credit, Utility Operating Income or Account 411.2, Provision for Deferred Income Taxes—Credit, Other Income and Deductions, as appropriate, shall be credited with tax effects related to items described in Paragraph A above where taxable income is higher than pretax accounting income due to differences between the periods in which revenue and expense transactions affect taxable income and the periods in which they enter into the determination of pretax accounting income.

D. Records with respect to entries to this account, as described above, and the account balance, shall be so maintained as to show the factors of calculation with respect to each annual amount of the item or class of items.

E. The utility is restricted in its use of this account to the purposes set forth above. It shall not transfer the balance in the account or any portion

thereof to retained earnings or to any other account or make any use thereof except as provided in the text of this account, without prior approval of RUS. Upon the disposition by sale, exchange, transfer, abandonment, or premature retirement of items on which there is a related balance herein, this account shall be charged with an amount equal to the related income tax effect, if any, arising from such disposition and Account 411.1, Provision For Deferred Income Taxes—Credit, Utility Operating Income, or Account 411.2, Provision For Deferred Income Taxes-Credit, Other Income and Deductions, as appropriate, shall be credited. When the remaining balance, after consideration of any related tax expenses, is less than $25,000, this account shall be charged and Account 411.1 or Account 411.2, as appropriate, credited with such balance. If after consideration of any related income tax expense, there is a remaining amount of $25,000 or more, RUS shall authorize or direct how such amount shall be accounted for at the time approval for the disposition of accounting is granted.

When plant is disposed of by transfer to a wholly owned subsidiary, the related balance in this account shall also be transferred. When the disposition relates to retirement of an item or items under a group method of depreciation where there is no tax effect in the year of retirement, no entries are required in this account if it can be determined that the related balance would be necessary to be retained to offset future group item tax deficiencies.

[58 FR 59825, Nov. 10, 1993, as amended at 59 FR 27436, May 27, 1994; 60 FR 55430, Nov. 1, 1995]

§1767.20 Plant accounts.

The plant accounts identified in this section shall be used by all RUS borrowers.

INTANGIBLE PLANT

301 Organization
302 Franchises and Consents
303 Miscellaneous Intangible Plant

PRODUCTION PLANT

Steam Production

310 Land and Land Rights
311 Structures and Improvements
312 Boiler Plant Equipment
313 Engines and Engine Driven Generators
314 Turbogenerator Units
315 Accessory Electric Equipment
316 Miscellaneous Power Plant Equipment

Nuclear Production

320 Land and Land Rights
321 Structures and Improvements
322 Reactor Plant Equipment
323 Turbogenerator Units
324 Accessory Electric Equipment
325 Miscellaneous Power Plant Equipment

Hydraulic Production

330 Land and Land Rights
331 Structures and Improvements
332 Reservoirs, Dams and Waterways
333 Water Wheels, Turbines and Generators
334 Accessory Electric Equipment
335 Miscellaneous Power Plant Equipment
336 Roads, Railroads and Bridges

Other Production

340 Land and Land Rights
341 Structures and Improvements
342 Fuel Holders, Producers and Accessories
343 Prime Movers
344 Generators
345 Accessory Electric Equipment
346 Miscellaneous Power Plant Equipment

TRANSMISSION PLANT

350 Land and Land Rights
351 [Reserved]
352 Structures and Improvements
353 Station Equipment
354 Tower and Fixtures
355 Poles and Fixtures
356 Overhead Conductors and Devices
357 Underground Conduit
358 Underground Conductors and Devices
359 Roads and Trails

DISTRIBUTION PLANT

360 Land and Land Rights
361 Structures and Improvements
362 Station Equipment
363 Storage Battery Equipment
364 Poles, Towers and Fixtures
365 Overhead Conductors and Devices
366 Underground Conduit
367 Underground Conductors and Devices
368 Line Transformers
369 Services
370 Meters
371 Installations on Customers' Premises
372 Leased Property on Customers' Premises
373 Street Lighting and Signal Systems

GENERAL PLANT

389 Land and Land Rights
390 Structures and Improvements

391 Office Furniture and Equipment
392 Transportation Equipment
393 Stores Equipment
394 Tools, Shop and Garage Equipment
395 Laboratory Equipment
396 Power Operated Equipment
397 Communication Equipment
398 Miscellaneous Equipment
399 Other Tangible Property

INTANGIBLE PLANT

301 Organization

This account shall include all fees paid to Federal or state governments for the privilege of incorporation and expenditures incident to organizing the corporation, partnership, or other enterprise and putting it into readiness to do business.

Items

1. Cost of obtaining certificates authorizing an enterprise to engage in the public-utility business.
2. Fees and expenses for incorporation.
3. Fees and expenses for mergers or consolidations.
4. Office expenses incident to organizing the utility.
5. Stock and minute books and corporate seal.

NOTE A: This account shall not include any discounts upon securities issued or assumed; nor shall it include any costs incident to negotiating loans, selling bonds or other evidences of debt or expenses in connection with the authorization, issuance, or sale of capital stock.

NOTE B: Exclude from this account and include in the appropriate expense account the cost of preparing and filing papers in connection with the extension of the term of incorporation unless the first organization costs have been written off. When charges are made to this account for expenses incurred in mergers, consolidations, or reorganizations, amounts previously included herein or in similar accounts in the books of the companies concerned shall be excluded from this account.

302 Franchises and Consents

A. This account shall include amounts paid to the Federal Government, to a state or to a political subdivision thereof in consideration for franchises, consents, water power licenses, or certificates, running in perpetuity or for a specified term of more than one year, together with necessary and reasonable expenses incident to procuring such franchises, consents, water power licenses, or certificates of permission and approval, including expenses of organizing and merging separate corporations, where statutes require, solely for the purpose of acquiring franchises.

B. If a franchise, consent, water power license, or certificate is acquired by assignment, the charge to this account in respect thereof shall not exceed the amount paid therefor by the utility to the assignor, nor shall it exceed the amount paid by the original grantee, plus the expense of acquisition to such grantee. Any excess of the amount actually paid by the utility over the amount above specified shall be charged to Account 426.5, Other Deductions.

C. When any franchise has expired, the book cost thereof shall be credited hereto and charged to Account 426.5, Other Deductions, or to Account 111, Accumulated Provision for Amortization of Electric Utility Plant, as appropriate.

D. Records supporting this account shall be kept so as to show separately the book cost of each franchise or consent.

NOTE: Annual or other periodic payments under franchises shall not be included herein but in the appropriate operating expense account.

303 Miscellaneous Intangible Plant

A. This account shall include the cost of patent rights, licenses, privileges, and other intangible property necessary or valuable in the conduct of utility operations and not specifically chargeable to any other account.

B. When any item included in this account is retired or expires, the book cost thereof shall be credited hereto and charged to Account 426.5, Other Deductions, or Account 111, Accumulated Provision for Amortization of Electric Utility Plant, as appropriate.

C. This account shall be maintained in such a manner that the utility can furnish full information with respect to the amounts included herein.

PRODUCTION PLANT

Steam Production

310 Land and Land Rights

This account shall include the cost of land and land rights used in connection with steam-power generation. (See § 1767.16 (g).)

311 Structures and Improvements

This account shall include the cost, in place, of structures and improvements used in connection with steam-power generation. (See § 1767.16 (h).)

NOTE: Include steam production roads and railroads in this account.

312 Boiler Plant Equipment

This account shall include the cost installed of furnaces, boilers, coal and ash handling and coal preparing equipment, steam and feed water piping, boiler apparatus, and accessories used in the production of steam, mercury, or other vapor, to be used primarily for generating electricity.

Items

1. Ash handling equipment, including hoppers, gates, cars, conveyors, hoists, sluicing equipment, including pumps and motors, sluicing water pipe and fittings, sluicing trenches and accessories, except sluices which are a part of a building.
2. Boiler feed system, including feed water heaters, evaporator condensers, heater drain pumps, heater drainers, deaerators, and vent condensers, boiler feed pumps, surge tanks, feed water regulators, feed water measuring equipment, and all associated drives.
3. Boiler plant cranes and hoists and associated drives.
4. Boilers and equipment, including boilers and baffles, economizers, superheaters, soot blowers, foundations and settings, water walls, arches, grates, insulation, blowdown system, drying out of new boilers, also associated motors or other power equipment.
5. Breeching and accessories, including breeching, dampers, soot spouts, hoppers and gates, cinder eliminators, breeching insulation, soot blowers and associated motors.
6. Coal handling and storage equipment, including coal towers, coal lorries, coal cars, locomotives and tracks when devoted principally to the transportation of coal, hoppers, downtakes, unloading and hoisting equipment, skip hoists and conveyors, weighing equipment, magnetic separators, cable ways, and housings and supports for coal handling equipment.
7. Draft equipment, including air preheaters and accessories, induced and forced draft fans, air ducts, combustion control mechanisms, and associated motors or other power equipment.
8. Gas-burning equipment, including holders, burner equipment and piping, and control equipment.
9. Instruments and devices, including all measuring, indicating, and recording equipment for boiler plant service together with mountings and supports.
10. Lighting systems.
11. Oil-burning equipment, including tanks, heaters, pumps with drive, burner equipment and piping, and control equipment.
12. Pulverized fuel equipment, including pulverizers, accessory motors, primary air fans, cyclones and ducts, dryers, pulverized fuel bins, pulverized fuel conveyors and equipment, burners, burner piping, priming equipment, air compressors, and motors.
13. Stacks, including foundations and supports, stack steel and ladders, stack brickwork, stack concrete, stack lining, stack painting (first), when set on separate foundations, independent of substructures or superstructures of building.
14. Station piping, including pipe, valves, fittings, separators, traps, desuperheaters, hangers, excavation, and covering for station piping system, including all steam, condensate, boiler feed and water supply piping, but not condensing water, plumbing, building heating, oil, gas, air piping or piping specifically provided for in Account 313.
15. Stoker or equivalent feeding equipment, including stokers and accessory motors, clinker grinders, fans and motors.
16. Ventilating equipment.

17. Water purification equipment, including softeners and accessories, evaporators and accessories, heat exchanges, filters, tanks for filtered or softened water, pumps, and motors.

18. Water-supply systems, including pumps, motors, strainers, raw-water storage tanks, boiler wash pumps, intake and discharge pipes, and tunnels not a part of a building.

19. Wood fuel equipment, including hoppers, fuel hogs and accessories, elevators and conveyors, bins and gates, spouts, measuring equipment and associated drives.

NOTE: When the system for supplying boiler or condenser water is elaborate, and when it includes a dam, reservoir, canal, pipe line, cooling ponds, or where gas or oil is used as a fuel for producing steam and is supplied through a pipe line system owned by the utility, the cost of such special facilities shall be charged to a subdivision of Account 311, Structures and Improvements.

313 Engines and Engine Driven Generators

This account shall include the cost installed of steam engines, reciprocating or rotary, and their associated auxiliaries; and engine-driven main generators, except turbogenerator units.

Items

1. Air cleaning and cooling apparatus, including blowers, drive equipment, air ducts, not a part of building, louvers, pumps, and hoods.

2. Belting, shafting, pulleys, and reduction gearing.

3. Circulating pumps, including connections between condensers and intake and discharge tunnels.

4. Cooling system, including towers, pumps, tank, and piping.

5. Condensers, including condensate pumps, air and vacuum pumps, ejector unloading valves and vacuum breakers, expansion devices, and screens.

6. Cranes and hoists, including items wholly identified with items listed herein.

7. Engines, reciprocating or rotary.

8. Fire-extinguishing systems.

9. Foundations and settings, especially constructed for and not expected to outlast the apparatus for which provided.

10. Generators-Main, a.c. or d.c., including field rheostats and connections for self-excited units, and excitation systems when identified with the generating unit.

11. Governors.

12. Lighting systems.

13. Lubricating systems, including gauges, filters, tanks, pumps, piping, and motors.

14. Mechanical meters, including gauges, recording instruments, sampling and testing equipment.

15. Piping-main exhaust, including connections between generator and condenser and between condenser and hotwell.

16. Piping-main stream, including connections from main throttle valve to turbine inlet.

17. Platforms, railings, steps, and gratings appurtenant to apparatus listed herein.

18. Pressure oil system, including accumulators, pumps, piping, and motors.

19. Throttle and inlet valve.

20. Tunnels, intake and discharge, for condenser system, when not a part of a structure.

21. Water screens and motors.

314 Turbogenerator Units

This account shall include the cost installed of main turbine-driven units and accessory equipment used in generating electricity by steam.

Items

1. Air leaning and cooling apparatus, including blowers, drive equipment, air ducts not a part of building, louvers, pumps, and hoods.

2. Circulating pumps, including connections between condensers and intake and discharge tunnels.

3. Condensers, including condensate pumps, air and vacuum pumps, ejectors, unloading valves and vacuum breakers, expansion devices, and screens.

4. Generator hydrogen, gas piping, and detrainment equipment.

5. Cooling system, including towers, pumps, tanks, and piping.

6. Cranes and hoists, including items wholly identified with items listed herein.

7. Excitation system, when identified with main generating units.
8. Fire-extinguishing systems.
9. Foundations and settings, especially constructed for and not expected to outlast the apparatus for which provided.
10. Governors.
11. Lighting systems.
12. Lubricating systems, including gauges, filters, water separators, tanks, pumps, piping, and motors.
13. Mechanical meters, including gauges, recording instruments, sampling and testing equipment.
14. Piping-main exhaust, including connections between turbogenerator and condenser and between condenser and hotwell.
15. Piping-main steam, including connections from main throttle valve to turbine inlet.
16. Platforms, railings, steps, and gratings appurtenant to apparatus listed herein.
17. Pressure oil systems, including accumulators, pumps, and piping motors.
18. Steelwork, specially constructed for apparatus listed herein.
19. Throttle and inlet valve.
20. Tunnels, intake and discharge, for condenser system, when not a part of structure, and water screens.
21. Turbogenerators-main, including turbine and generator, field rheostats and electric connections for self-excited units.
22. Water screens and motors.
23. Moisture separator for turbine steam.
24. Turbine lubricating oil (initial charge).

315 Accessory Electric Equipment

This account shall include the cost installed of auxiliary generating apparatus, conversion equipment, and equipment used primarily in connection with the control and switching of electric energy produced by steam power, and the protection of electric circuits and equipment, except electric motors used to drive equipment included in other accounts. Such motors shall be included in the account in which the equipment with which they are associated is included.

Items

1. Auxiliary generators, including boards, compartments, switching equipment, control equipment, and connections to auxiliary power bus.
2. Excitation system, including motor, turbine and dual-drive exciter sets and rheostats, storage batteries and charging equipment, circuit breakers, panels and accessories, knife switches and accessories, surge arresters, instrument shunts, conductors and conduit, special supports for conduit, generator field and exciter switch panels, exciter bus tie panels, generator and exciter rheostats and special housing and protective screens.
3. Generator main connections, including oil circuit breakers and accessories, disconnecting switches and accessories, operating mechanisms and interlocks, current transformers, potential transformers, protective relays, isolated panels and equipment, conductors and conduit, special supports for generator main leads, grounding switch, and special housings and protective screens.
4. Station buses including main, auxiliary, transfer, synchronizing and fault ground buses, including oil circuit breakers and accessories, disconnecting switches and accessories, operating mechanisms and interlocks, reactors and accessories, voltage regulators and accessories, compensators, resistors, starting transformers, current transformers, potential transformers, protective relays, storage batteries and charging equipment, isolated panels and equipment, conductors and conduit, special supports, special housings, concrete pads, general station grounding system, special fire-extinguishing system, and test equipment.
5. Station control system, including station switchboards with panel wiring, panels with instruments and control equipment only, panels with switching equipment mounted or mechanically connected, truck-type boards complete, cubicles, station supervisory control boards, generator and exciter signal stands, temperature recording devices, frequency-control equipment, master clocks, watt-hour meters and synchronoscope in the turbine room, station totalizing wattmeter, boiler-room load indicator

equipment, storage batteries, panels and charging sets, instrument transformers for supervisory metering, conductors and conduit, special supports for conduit, switchboards, batteries, special housing for batteries, protective screens, and doors.

NOTE A: Do not include in this account transformers and other equipment used for changing the voltage or frequency of electricity for the purposes of transmission or distribution.

NOTE B: When any item of equipment listed herein is used wholly to furnish power to equipment included in another account, its cost shall be included in such other account.

316 Miscellaneous Power Plant Equipment

This account shall include the cost installed of miscellaneous equipment in and about the steam generating plant devoted to general station use, and which is not properly includible in any of the foregoing steam-power production accounts.

Items

1. Compressed air and vacuum cleaning systems, including tanks, compressors, exhausters, air filters, and piping.
2. Cranes and hoisting equipment, including cranes, cars, crane rails, monorails, and hoists with electric and mechanical connections.
3. Fire-extinguishing equipment for general station use.
4. Foundations and settings specially constructed for and not expected to outlast the apparatus for which provided.
5. Locomotive cranes not includible elsewhere.
6. Locomotives not includible elsewhere.
7. Marine equipment, including boats and barges.
8. Miscellaneous belts, pulleys, and countershafts.
9. Miscellaneous equipment, including atmospheric and weather indicating devices, intrasite communication equipment, laboratory equipment, signal systems, callophones, emergency whistles and sirens, fire alarms, insect-control equipment, and other similar equipment.
10. Railway cars not includible elsewhere.
11. Refrigerating systems, including compressors, pumps, and cooling coils.
12. Station maintenance equipment, including lathes, shapers, planers, drill presses, hydraulic presses, and grinders with motors, shafting, hangers, and pulleys.
13. Ventilating equipment, including items wholly identified with apparatus listed herein.

NOTE: When any item of equipment listed herein is wholly used in connection with equipment included in another account, its cost shall be included in such other account.

Nuclear Production

320 Land and Land Rights

This account shall include the cost of land and land rights used in connection with nuclear power generation. (See § 1767.16(g).)

321 Structures and Improvements

This account shall include the cost, in place, of structures and improvements used and useful in connection with nuclear power generation. (See § 1767.16 (h).)

NOTE: Include vapor containers and nuclear production roads and railroads in this account.

322 Reactor Plant Equipment

This account shall include the installed cost of reactors, reactor fuel handling and storage equipment, pressurizing equipment, coolant charging equipment, purification and discharging equipment, radioactive waste treatment and disposal equipment, boilers, steam and feed water piping, reactor and boiler apparatus and accessories and other reactor plant equipment used in the production of steam to be used primarily for generating electricity, including auxiliary superheat boilers and associated equipment in systems which change temperatures or pressure of steam from the reactor system.

Items

1. Auxiliary superheat boilers and associated fuel storage handling preparation and burning equipment. (See Account 312, Boiler Plant Equipment, for items, but exclude water supply, water flow lines, and steam lines, as well as other equipment not strictly within the superheat function.)
2. Boiler feed system, including feed water heaters, evaporator condensers, heater drain pumps, heater drainers, deaerators, and vent condensers, boiler feed pumps, surge tanks, feed water regulators, feed water measuring equipment, and all associated drivers.
3. Boilers and heat exchangers.
4. Instruments and devices, including all measuring, indicating, and recording equipment for reactor and boiler plant service together with mountings and supports.
5. Lighting systems.
6. Moderators, such as heavy water, and graphite, initial charge.
7. Reactor coolant; primary and secondary systems, initial charge.
8. Radioactive waste treatment and disposal equipment, including tanks, ion exchangers, incinerators, condensers, chimneys, and diluting fans and pumps.
9. Foundations and settings, especially constructed for and not expected to outlast the apparatus for which provided.
10. Reactor including shielding, control rods and mechanisms.
11. Reactor fuel handling equipment, including manipulating and extraction tools, underwater viewing equipment, seal cutting and welding equipment, fuel transfer equipment, and fuel disassembly machinery.
12. Reactor fuel element failure detection system.
13. Reactor emergency poison container and injection system.
14. Reactor pressuring and pressure relief equipment, including pressurizing tanks and immersion heaters.
15. Reactor coolant or moderator circulation charging, purification, and discharging equipment, including tanks, pumps, heat exchangers, demineralizers, and storage.
16. Station piping, including pipes, valves, fittings, separators, traps, desuperheaters, hangers, excavation, and covering for station piping system, including all-reactor coolant, steam, condensate, boiler feed and water supply piping, but not condensing water, plumbing, building heating, oil, gas, or air piping.
17. Ventilating equipment.
18. Water purification equipment, including softeners, demineralizers and accessories, evaporators and accessories, heat exchangers, filters, tanks for filtered or softened water, pumps, and motors.
19. Water supply systems, including pumps, motors, strainers, raw-water storage tanks, boiler wash pumps, intake and discharge pipes and tunnels not a part of a building.
20. Reactor plant cranes and hoists, and associated drives.

NOTE: When the system for supplying boiler or condenser water is elaborate, as when it includes a dam, reservoir, canal, pipe lines, or cooling ponds, the cost of such special facilities shall be charged to a subdivision of Account 321, Structures and Improvements.

323 Turbogenerator Units

This account shall include the cost installed of main turbine-driven units and accessory equipment used in generating electricity by steam.

Items

1. Air cleaning and cooling apparatus, including blowers, drive equipment, air ducts, not a part of building, louvers, pumps, and hoods.
2. Circulating pumps, including connections between condensers, and intake and discharge tunnels.
3. Condensers, including condensate pumps, air and vacuum pumps, ejectors, unloading valves and vacuum breakers, expansion devices, and screens.
4. Generator hydrogen gas piping system and hydrogen detrainment equipment, and bulk hydrogen gas storage equipment.
5. Cooling system, including towers, pumps, tanks, and piping.
6. Cranes and hoists, including items wholly identified with items listed herein.
7. Excitation system, when identified with main generating units.
8. Fire extinguishing systems.

9. Foundations and settings, especially constructed for and not expected to outlast the apparatus for which provided.

10. Governors.

11. Lighting systems.

12. Lubricating systems, including gauges, filters, water separators, tanks, pumps, piping, and motors.

13. Mechanical meters, including gauges, recording instruments, sampling and testing equipment.

14. Piping-main steam, including connections between turbogenerator and condenser and between condenser and hotwell.

15. Piping-main steam, including connections from main throttle valve to turbine inlet.

16. Platforms, railings, steps, and gratings appurtenant to apparatus listed herein.

17. Pressure oil systems, including accumulators, pumps, piping, and motors.

18. Steelwork, specially constructed for apparatus listed herein.

19. Throttle and inlet valve.

20. Tunnels, intake and discharge, for condenser system, when not a part of structure, and water screens.

21. Turbogenerators-main, including turbine and generator, field rheostats and electric connections for self-excited units.

22. Water screens and motors.

23. Moisture separators for turbine steam.

24. Turbine lubricating oil, initial charge.

324 Accessory Electric Equipment

This account shall include the cost installed of auxiliary generating apparatus, conversion equipment, and equipment used primarily in connection with the control and switching of electric energy produced by nuclear power, and the protection of electric circuits and equipment, except electric motors used to drive equipment included in other accounts. Such motors shall be included in the account in which the equipment with which they are associated is included.

NOTE: Do not include in this account transformers and other equipment used for changing the voltage or frequency of electric energy for the purpose of transmission or distribution.

Items

1. Auxiliary generators, including boards, compartments, switching equipment, control equipment, and connections to auxiliary power bus.

2. Excitation system, including motor, turbine and dual-drive exciter sets and rheostats, storage batteries, and charging equipment, circuit breakers, panels and accessories, knife switches and accessories, surge arresters, instrument shunts, conductors and conduit, special supports for conduit, generator field and exciter switch panels, exciter bus tie panels, generator and exciter rheostats and special housing and protective screens.

3. Generator main connections, including oil circuit breakers and accessories, disconnecting switches and accessories, operating mechanisms and interlocks, current transformers, potential transformers, protective relays, isolated panels and equipment, conductors and conduit, special supports for generator main leads, grounding switch, special housings and protective screens.

4. Station buses, including main, auxiliary, transfer, synchronizing and fault ground buses, including oil circuit breakers and accessories, operating mechanisms and interlocks, reactors and accessories, voltage regulators and accessories, compensators, resistors, starting transformers, current transformers, potential transformers, protective relays, storage batteries and charging equipment, isolated panels and equipment, conductors and conduit, special supports, special housings, concrete pads, general station grounding system, fire-extinguishing system, and test equipment.

5. Station control system, including station switchboards with panel wiring, panels with instruments and control equipment only, panels with switching equipment mounted or mechanically connected, truck-type boards complete, cubicles, station supervisory control boards, generator and exciter signal stands, temperature recording devices, frequency-control equipment, master clocks, watt-hour

meters and synchronoscope in the turbine room, station totalizing wattmeter, boiler-room load indicator equipment, storage batteries, panels and charging sets, instrument transformers for supervisory metering, conductors and conduit, special supports for conduit, switchboards, batteries, special housing for batteries, protective screens, and doors.

NOTE: When any item of equipment listed herein is used wholly to furnish power to equipment included in another account, its cost shall be included in such other account.

325 Miscellaneous Power Plant Equipment

This account shall include the cost installed of miscellaneous equipment in and about the nuclear generating plant devoted to general station use, which is not properly includible in any of the foregoing nuclear-power production accounts.

Items

1. Compressed air and vacuum cleaning systems, including tanks, compressors, exhausters, air filters, and piping.
2. Cranes and hoisting equipment, including cranes, cars, crane rails, monorails, and hoists with electric and mechanical connections.
3. Fire-extinguishing equipment for general station and site use.
4. Foundations and settings specially constructed for and not expected to outlast the apparatus for which provided.
5. Locomotive cranes not includible elsewhere.
6. Locomotives not included elsewhere.
7. Marine equipment, including boats and barges.
8. Miscellaneous belts, pulleys, and countershafts.
9. Miscellaneous equipment, including atmospheric and weather recording devices, intrasite communication equipment, laboratory equipment, signal systems, callophones, emergency whistles and sirens, fire alarms, insect-control equipment, and other similar equipment.
10. Railway cars or special shipping containers not includible elsewhere.
11. Refrigerating systems, including compressors, pumps, and cooling coils.
12. Station maintenance equipment, including lathes, shapers, planers, drill presses, hydraulic presses, and grinders with motors, shafting, hangers, and pulleys.
13. Ventilating equipment, including items wholly identified with apparatus listed herein.
14. Station and area radiation monitoring equipment.

NOTE: When any item of equipment listed herein is wholly used in connection with equipment included in another account, its cost shall be included in such other account.

Hydraulic Production

330 Land and Land Rights

This account shall include the cost of land and land rights used in connection with hydraulic power generation. (See §1767.16 (g).) It shall also include the cost of land and land rights used in connection with (1) the conservation of fish and wildlife, and (2) recreation. Separate subaccounts shall be maintained for each of the above.

331 Structures and Improvements

This account shall include the cost, in place, of structures and improvements used in connection with hydraulic power generation. (See §1767.16 (h).) It shall also include the cost, in place, of structures and improvements used in connection with (1) the conservation of fish and wildlife, and (2) recreation. Separate subaccounts shall be maintained for each of the above.

332 Reservoirs, Dams, and Waterways

This account shall include the cost in place of facilities used for impounding, collecting, storage, diversion, regulation, and delivery of water used primarily for generating electricity. It shall also include the cost in place of facilities used in connection with (1) the conservation of fish and wildlife, and (2) recreation. Separate subaccounts shall be maintained for each of the above. (See §1767.16 (h)(3).)

Items

1. Bridges and culverts, when not a part of roads or railroads.

2. Clearing and preparing land.

3. Dams, including wasteways, spillways, flash boards, spillway gates with operating and control mechanisms, tunnels, gate houses, and fish ladders.

4. Dikes and embankments.

5. Electric system, including conductors, control system, transformers, and lighting fixtures.

6. Excavation, including shoring, bracing, bridging, refill, and disposal of excess excavated material.

7. Foundations and settings specially constructed for and not expected to outlast the apparatus for which provided.

8. Intakes, including trash racks, rack cleaners, control gates and valves with operating mechanisms, and intake house when not a part of station structure.

9. Platforms, railings, steps, and gratings appurtenant to structures listed herein.

10. Power line wholly identified with items included herein.

11. Retaining walls.

12. Water conductors and accessories, including canals, tunnels, flumes, penstocks, pipe conductors, forebays, tailraces, navigation locks and operating mechanisms, water-hammer and surge tanks, and supporting trestles and structures.

13. Water storage reservoirs, including dams, flashboards, spillway gates and operating mechanisms, inlet and outlet tunnels, regulating valves and valve towers, silt and mud sluicing tunnels with valve or gate towers, and all other structures wholly identified with any of the foregoing items.

333 Water Wheels, Turbines and Generators

This account shall include the cost installed of water wheels and hydraulic turbines (from connection with penstock or flume to tailrace) and generators driven thereby devoted to the production of electricity by water power or for the production of power for industrial or other purposes, if the equipment used for such purposes is a part of the hydraulic power plant works.

Items

1. Exciter water wheels and turbines, including runners, gates, governors, pressure regulators, oil pumps, operating mechanisms, scroll cases, draft tubes, and draft-tube supports.

2. Fire-extinguishing equipment.

3. Foundations and settings, specially constructed for and not expected to outlast the apparatus for which provided.

4. Generator cooling system, including air cooling and washing apparatus, air fans and accessories, and air ducts.

5. Generators-main, a.c. or d.c., including field rheostats and connections for self-excited units and excitation system when identified with the generating unit.

6. Lighting systems.

7. Lubricating systems, including gauges, filters, tanks, pumps, and piping.

8. Main penstock valves and appurtenances, including main valves, control equipment, bypass valves and fittings, and other accessories.

9. Main turbines and water wheels, including runners, gates, governors, pressure regulators, oil pumps, operating mechanisms, scroll cases, draft tubes, and draft-tube supports.

10. Mechanical meters and recording instruments.

11. Miscellaneous water-wheel equipment, including gauges, thermometers, meters, and other instruments.

12. Platforms, railings, steps, and gratings appurtenant to apparatus listed herein.

13. Scroll case filling and drain system, including gates, pipe, valves, and fittings.

14. Water-actuated pressure-regulator system, including tanks and housings, pipes, valves, fittings and insulators, piers and anchorage, and excavation and backfill.

334 Accessory Electric Equipment

This account shall include the cost installed of auxiliary generating apparatus, conversion equipment, and equipment used primarily in connection with the control and switching of electric energy produced by hydraulic power and the protection of electric circuits and equipment, except electric

motors used to drive equipment included in other accounts, such motors being included in the account in which the equipment with which they are associated is included.

Items

1. Auxiliary generators, including boards, compartments, switching equipment, control equipment, and connections to auxiliary power bus.

2. Excitation system, including motor, turbine, and dual-drive exciter sets and rheostats, storage batteries and charging equipment, circuit breakers, panels and accessories, knife switches and accessories, surge arresters, instrument shunts, conductors and conduit, special supports for conduit, generator field and exciter switch panels, exciter bus tie panels, generator and exciter rheostats and special housings and protective screens.

3. Generator main connections, including oil circuit breakers and accessories, disconnecting switches and accessories, operating mechanisms and interlocks, current transformers, potential transformers, protective relays, isolated panels and equipment, conductors and conduit, special supports for generator main leads, grounding switch, and special housings and protective screens.

4. Station buses, including main, auxiliary, transfer, synchronizing, and fault ground buses, including oil circuit breakers and accessories, disconnecting switches and accessories, operating mechanisms and interlocks, reactors and accessories, voltage regulators and accessories, compensators, resistors starting transformers, current transformers, potential transformers, protective relays, storage batteries, and charging equipment, isolated panels and equipment, conductors and conduit, special supports, special fire-extinguishing system, and test equipment.

5. Station control system, including station switchboards with panel wiring, panels with instruments and control equipment only, panels with switching equipment mounted for mechanically connected, truck-type boards complete, cubicles, station supervisory control devices, frequency control equipment, master clocks, watt-hour meter, station totalizing watt-meter, storage batteries, panels and charging sets, instrument transformers for supervisory metering, conductors and conduit, special supports for conduit, switchboards, batteries, special housings for batteries, protective screens, and doors.

NOTE A: Do not include in this account transformers and other equipment used for changing the voltage or frequency of electricity for the purpose of transmission or distribution.

NOTE B: When any item of equipment listed herein is used wholly to furnish power to equipment, it shall be included in such equipment account.

335 Miscellaneous Power Plant Equipment

This account shall include the cost installed of miscellaneous equipment in and about the hydroelectric generating plant which is devoted to general station use and is not properly includible in other hydraulic production accounts. It shall also include the cost of equipment used in connection with (1) the conservation of fish and wildlife, and (2) recreation. Separate subaccounts shall be maintained for each of the above.

Items

1. Compressed air and vacuum cleaning systems, including tanks, compressors, exhausters, air filters, and piping.

2. Cranes and hoisting equipment, including cranes, cars, crane rails, monorails, and hoists with electric and mechanical connections.

3. Fire-extinguishing equipment for general station use.

4. Foundations and settings, specially constructed for and not expected to outlast the apparatus for which provided.

5. Locomotive cranes not includible elsewhere.

6. Locomotives not includible elsewhere.

7. Marine equipment, including boats and barges.

8. Miscellaneous belts, pulleys, and countershafts.

9. Miscellaneous equipment, including atmospheric and weather indicating devices. Intrasite communication

equipment, laboratory equipment, insect control equipment, signal systems, callophones, emergency whistles and sirens, fire alarms, and other similar equipment.

10. Railway cars, not includible elsewhere.

11. Refrigerating system, including compressors, pumps, and cooling coils.

12. Station maintenance equipment, including lathes, shapers, planers, drill presses, hydraulic presses, and grinders with motors, shafting, hangers, and pulleys.

13. Ventilating equipment, including items wholly identified with apparatus listed herein.

NOTE: When any item of equipment, listed herein, is used wholly in connection with equipment included in another account, its cost shall be included in such other account.

336 Roads, Railroads, and Bridges

This account shall include the cost of roads, railroads, trails, bridges, and trestles used primarily as production facilities. It also includes those roads necessary to connect the plant with highway transportation systems, except when such roads are dedicated to public use and maintained by public authorities.

Items

1. Bridges, including foundations, piers, girders, trusses, and flooring.
2. Clearing land.
3. Railroads, including grading, ballast, ties, rails, culverts, and hoists.
4. Roads, including grading, surfacing, and culverts.
5. Structures, constructed and maintained in connection with items listed herein.
6. Trails, including grading, surfacing, and culverts.
7. Trestles, including foundations, piers, girders, trusses, and flooring.

NOTE A: Roads intended primarily for connecting employees' houses with the power plant, and roads used primarily in connection with fish and wildlife, and recreation activities, shall not be included herein but in Account 331, Structures and Improvements.

NOTE B: The cost of temporary roads and bridges necessary during the period of construction but abandoned or dedicated to public use upon completion of the plant, shall not be included herein but shall be charged to the accounts appropriate for the construction.

Other Production

340 Land and Land Rights

This account shall include the cost of land and land rights used in connection with other power generation. (See § 1767.16 (g).)

341 Structures and Improvements

This account shall include the cost in place of structures and improvements used in connection with other power generation. (See § 1767.16 (h).)

342 Fuel Holders, Producers, and Accessories

This account shall include the cost installed of fuel handling and storage equipment used between the point of fuel delivery to the station and the intake pipe through which fuel is directly drawn to the engine, also the cost of gas producers and accessories devoted to the production of gas for use in prime movers driving main electric generators.

Items

1. Blower and fans.
2. Boilers and pumps.
3. Economizers.
4. Exhauster outfits.
5. Flues and piping.
6. Pipe system.
7. Producers.
8. Regenerators.
9. Scrubbers.
10. Steam injectors.
11. Tanks for storage of oil and gasoline.
12. Vaporizers.

343 Prime Movers

This account shall include the cost installed of Diesel or other prime movers devoted to the generation of electric energy, together with their auxiliaries.

Items

1. Air-filtering system.
2. Belting, shafting, pulleys, and reduction gearing.

3. Cooling system, including towers, pumps, tanks, and piping.
4. Cranes and hoists, including items wholly identified with apparatus listed herein.
5. Engines, Diesel, gasoline, gas, or other internal combustion.
6. Foundations and settings specially constructed for and not expected to outlast the apparatus for which provided.
7. Governors.
8. Ignition system.
9. Inlet valve.
10. Lighting systems.
11. Lubricating systems, including filters, tanks, pumps, and piping.
12. Mechanical meters, including gauges, recording instruments, sampling, and testing equipment.
13. Mufflers.
14. Piping.
15. Starting systems, compressed air, or other, including compressors and drives, tanks, piping, motors, boards and connections, and storage tanks.
16. Steelwork, specially constructed for apparatus listed herein.
17. Waste heat boilers and antifluctuators.

344 Generators

This account shall include the cost installed of Diesel or other power driven main generators.

Items

1. Cranes and hoists, including items wholly identified with such apparatus.
2. Fire-extinguishing equipment.
3. Foundations and settings, specially constructed for and not expected to outlast the apparatus for which provided.
4. Generator cooling system, including air cooling and washing apparatus, air fans and accessories, and air ducts.
5. Generators-main, a.c. or d.c., including field rheostats and connections for self-excited units and excitation system when identified with the generating unit.
6. Lighting systems.
7. Lubricating system, including tanks, filters, strainers, pumps, piping, and coolers.
8. Mechanical meters and recording instruments.
9. Platforms, railings, steps, and gratings appurtenant to apparatus listed herein.

NOTE: If prime movers and generators are so integrated that it is not practical to classify them separately, the entire unit may be included in Account 344, Generators.

345 Accessory Electric Equipment

This account shall include the cost installed of auxiliary generating apparatus, conversion equipment, and equipment used primarily in connection with the control and switching of electric energy produced in other power generating stations, and the protection of electric circuits and equipment, except electric motors used to drive equipment included in other accounts. Such motors shall be included in the account in which the equipment with which it is associated is included.

Items

1. Auxiliary generators, including boards, compartments, switching equipment, control equipment, and connections to auxiliary power bus.
2. Excitation system, including motor, turbine and dual-drive exciter sets and rheostats, storage batteries and charging equipment, circuit breakers, panels and accessories, knife switches and accessories, surge arresters, instrument shunts, conductors and conduit, special supports for conduit, generator field and exciter switch panels, exciter bus tie panels, generator and exciter rheostats and special housings and protective screens.
3. Generator main connections, including oil circuit breakers and accessories, disconnecting switches and accessories, operating mechanisms and interlocks, current transformers, potential transformers, protective relays, isolated panels and equipment, conductors and conduit, special supports for generator main leads, grounding switch, and special housing and protective screens.
4. Station control system, including station switchboards with panel wiring, panels with instruments and control equipment only, panels with switching equipment mounted or mechanically connected, trunk-type

boards complete, cubicles, station supervisory control boards, generator and exciter signal stands, temperature-recording devices, frequency control equipment, master clocks, watt-hour meter, station totalizing wattmeter, storage batteries, panels and charging sets, instrument transformers for supervisory metering, conductors and conduit, special supports for conduit, switchboards, batteries, special housing for batteries, protective screens, and doors.

5. Station buses, including main, auxiliary, transfer, synchronizing and fault ground buses, including oil circuit breakers and accessories, disconnecting switches and accessories, operating mechanisms and interlocks, reactors and accessories, voltage regulators and accessories, compensators, resistors, starting transformers, current transformers, potential transformers, protective relays, storage batteries and charging equipment, isolated panels and equipment, conductors and conduit, special supports, special housings, concrete pads, general station ground system, special fire-extinguishing system, and test equipment.

NOTE A: Do not include in this account transformers and other equipment used for changing the voltage or frequency of electric energy for the purpose of transmission or distribution.

NOTE B: When any item of equipment listed herein is used wholly to furnish power to equipment included in another account, its cost shall be included in such other account.

346 Miscellaneous Power Plant Equipment

This account shall include the cost installed of miscellaneous equipment in and about the other power generating plant, devoted to general station use, and not properly includible in any of the foregoing other power production accounts.

Items

1. Compressed air and vacuum cleaning systems, including tanks, compressors, exhausters, air filters, and piping.
2. Cranes and hoisting equipment, including cranes, cars, crane rails, monorails, and hoists with electric and mechanical connections.
3. Fire-extinguishing equipment for general station use.
4. Foundations and settings, specially constructed for and not expected to outlast the apparatus for which provided.
5. Miscellaneous equipment, including atmospheric and weather indicating devices, intrasite communication equipment, laboratory equipment, signal systems, callophones, emergency whistles and sirens, fire alarms, and other similar equipment.
6. Miscellaneous belts, pulleys, and countershafts.
7. Refrigerating systems including compressors, pumps, and cooling coils.
8. Station maintenance equipment, including lathes, shapers, planters, drill presses, hydraulic presses, and grinders with motors, shafting, hangers, or pulleys.
9. Ventilating equipment, including items wholly identified with apparatus listed herein.

NOTE: When any item of equipment, listed herein is used wholly in connection with equipment included in another account, its cost shall be included in such other account.

TRANSMISSION PLANT

350 Land and Land Rights

This account shall include the cost of land and land rights used in connection with transmission operations. (See § 1767.16 (g).)

351 [Reserved]

352 Structures and Improvements

This account shall include the cost, in place, of structures and improvements used in connection with transmission operations. (See § 1767.16 (h).)

353 Station Equipment

This account shall include the cost installed of transforming, conversion, and switching equipment used for the purpose of changing the characteristics of electricity in connection with its transmission or for controlling transmission circuits.

Items

1. Bus compartments, concrete, brick, and sectional steel, including items permanently attached thereto.
2. Conduit, including concrete and iron duct runs not a part of a building.
3. Control equipment, including batteries, battery charging equipment, transformers, remote relay boards, and connections.
4. Conversion equipment, including transformers, indoor and outdoor, frequency changers, motor generator sets, rectifiers, synchronous converters, motors, cooling equipment, and associated connections.
5. Fences.
6. Fixed and synchronous condensers, including transformers, switching equipment, blowers, motors and connections.
7. Foundations and settings, specially constructed for and not expected to outlast the apparatus for which provided.
8. General station equipment, including air compressors, motors, hoists, cranes, test equipment, and ventilating equipment.
9. Platforms, railings, steps, and gratings appurtenant to apparatus listed herein.
10. Primary and secondary voltage connections, including bus runs and supports, insulators, potheads, lightning arresters, cable and wire runs from and to outdoor connections or to manholes and the associated regulators, reactors, resistors, surge arresters, and accessory equipment.
11. Switchboards, including meters, relays, and control wiring.
12. Switching equipment, indoor and outdoor, including oil circuit breakers and operating mechanisms, truck switches, and disconnect switches.
13. Tools and appliances.

354 Towers and Fixtures

This account shall include the cost installed of towers and appurtenant fixtures used for supporting overhead transmission conductors.

Items

1. Anchors, guys, and braces.
2. Brackets.
3. Crossarms, including braces.
4. Excavation, backfill, and disposal of excess excavated material.
5. Foundations.
6. Guards.
7. Insulator pins and suspension bolts.
8. Ladder and steps.
9. Railings.
10. Towers.

355 Poles and Fixtures

This account shall include the cost installed of transmission line poles, wood, steel, concrete, or other material, together with appurtenant fixtures used for supporting overhead transmission conductors.

Items

1. Anchors, head arm and other guys, including guy guards, guy clamps, strain insulators, and pole plates.
2. Brackets.
3. Crossarms and braces.
4. Excavation and backfill, including disposal of excess excavated material.
5. Extension arms.
6. Gaining, roofing, stenciling, and tagging.
7. Insulator pins and suspension belts.
8. Paving.
9. Pole steps.
10. Poles, wood, steel, concrete, or other material.
11. Racks complete with insulators.
12. Reinforcing and stubbing.
13. Settings.
14. Shaving and painting.

356 Overhead Conductors and Devices

This account shall include the cost installed of overhead conductors and devices used for transmission purposes.

Items

1. Circuit breakers.
2. Conductors, including insulated and bare wires and cables.
3. Ground wires and ground clamps.
4. Insulators, including pin, suspension, and other types.
5. Lightning arresters.
6. Switches.
7. Other line devices.

357 Underground Conduit

This account shall include the cost installed of underground conduit and tunnels used for housing transmission cables or wires. (See § 1767.16 (n).)

Items

1. Conduit, concrete, brick or tile, including iron pipe, fiber pipe, Murray duct, and standpipe on pole or tower.
2. Excavation, including shoring, bracing, bridging, backfill, and disposal of excess excavated material.
3. Foundations and settings specially constructed for and not expected to outlast the apparatus for which provided.
4. Lighting systems.
5. Manholes, concrete or brick, including iron or steel, frames and covers, hatchways, gratings, ladders, cable racks and hangers, permanently attached to manholes.
6. Municipal inspection.
7. Pavement disturbed, including cutting and replacing pavement, pavement base and sidewalks.
8. Permits.
9. Protection of street openings.
10. Removal and relocation of subsurface obstructions.
11. Sewer connections, including drains, traps, tide valves, and check valves.
12. Sumps, including pumps.
13. Ventilating equipment.

358 Underground Conductors and Devices

This account shall include the cost installed of underground conductors and devices used for transmission purposes.

Items

1. Armored conductors, buried, including insulators, insulating materials, splices, potheads, and trenching.
2. Armored conductors, submarine, including insulators, insulating materials, splices in terminal chambers, and potheads.
3. Cables in standpipe, including pothead and connection from terminal chamber of manhole to insulators on pole.
4. Circuit breakers.
5. Fireproofing, in connection with any items listed herein.
6. Hollow-core oil-filled cable, including straight or stop joints, pressure tanks, auxiliary air tanks, feeding tanks, terminals, potheads and connections, and ventilating equipment.
7. Lead and fabric covered conductors, including insulators, compound filled, oil filled, or vacuum splices, and potheads.
8. Lightning arresters.
9. Municipal inspection.
10. Permits.
11. Protection of street openings.
12. Racking of cables.
13. Switches.
14. Other line devices.

359 Roads and Trails

This account shall include the cost of roads, trails, and bridges used primarily as transmission facilities.

Items

1. Bridges, including foundation piers, girders, trusses, and flooring.
2. Clearing land.
3. Roads, including grading, surfacing, and culverts.
4. Structures, constructed and maintained in connection with items included herein.
5. Trails, including grading, surfacing, and culverts.

NOTE: The cost of temporary roads, and bridges necessary during the period of construction but abandoned or dedicated to public use upon completion of the plant, shall be charged to the accounts appropriate for the construction.

DISTRIBUTION PLANT

360 Land and Land Rights

This account shall include the cost of land and land rights used in connection with distribution operations. (See § 1767.16 (g).)

NOTE: Do not include the cost of permits to erect poles, or towers or to trim trees in this account. (See Account 364, Poles, Towers and Fixtures, and Account 365, Overhead Conductors and Devices.)

361 Structures and Improvements

This account shall include the cost, in place, of structures and improvements used in connection with distribution operations. (See §1767.16 (h).)

362 Station Equipment

This account shall include the cost installed of station equipment, including transformer banks, which are used for the purpose of changing the characteristics of electricity in connection with its distribution.

Items

1. Bus compartments, concrete, brick and sectional steel, including items permanently attached thereto.
2. Conduit, including concrete and iron duct runs not part of building.
3. Control equipment, including batteries, battery charging equipment, transformers, remote relay boards, and connections.
4. Conversion equipment, indoor and outdoor, frequency changers, motor generator sets, rectifiers, synchronous converters, motors, cooling equipment, and associated connections.
5. Fences.
6. Fixed and synchronous condensers, including transformers, switching equipment, blowers, motors, and connections.
7. Foundations and settings, specially constructed for and not expected to outlast the apparatus for which provided.
8. General station equipment, including air compressors, motors, hoists, cranes, test equipment, and ventilating equipment.
9. Platforms, railings, steps, and gratings appurtenant to apparatus listed herein.
10. Primary and secondary voltage connections, including bus runs and supports, insulators, potheads, lightning arresters, cable and wire runs from and to outdoor connections or to manholes and the associated regulators, reactors, resistors, surge arresters, and accessory equipment.
11. Switchboards, including meters, relays, and control wiring.
12. Switching equipment, indoor and outdoor, including oil circuit breakers and operating mechanisms, truck switches, disconnect switches.

NOTE: The cost of rectifiers, series transformers, and other special station equipment devoted exclusively to street lighting service shall not be included in this account, but in Account 373, Street Lighting and Signal Systems.

363 Storage Battery Equipmentis account shall include the cost installed of storage battery equipment used for the purpose of supplying electricity to meet emergency or peak demands.

Items

1. Batteries, including elements, tanks, and tank insulators.
2. Battery room connections, including cable or bus runs and connections.
3. Battery room flooring, when specially laid for supporting batteries.
4. Charging equipment, including motor generator sets and other charging equipment and connections, and cable runs from generator or station bus to battery room connections.
5. Miscellaneous equipment, including instruments, and water stills.
6. Switching equipment, including endcell switches and connections, boards and panels, used exclusively for battery control, not part of general station switchboard.
7. Ventilating equipment, including fans and motors, louvers, and ducts not part of building.

NOTE: Storage batteries used for control and general station purposes shall not be included in this account but in the account appropriate for their use.

364 Poles, Towers and Fixtures

This account shall include the cost installed of poles, towers, and appurtenant fixtures used for supporting overhead distribution conductors and service wires.

Items

1. Anchors, head arm, and other guys, including guy guards, guy clamps, strain insulators, and pole plates.
2. Brackets.
3. Crossarms and braces.
4. Excavation and backfill, including disposal of excess excavated material.
5. Extension arms.

6. Foundations.
7. Guards.
8. Insulator pins and suspension bolts.
9. Paving.
10. Permits for construction.
11. Pole steps and ladders.
12. Poles, wood, steel, concrete, or other material.
13. Racks complete with insulators.
14. Railings.
15. Reinforcing and stubbing.
16. Settings.
17. Shaving, painting, gaining, roofing, stenciling, and tagging.
18. Towers.
19. Transformer racks and platforms.

365 Overhead Conductors and Devices

This account shall include the cost installed of overhead conductors and devices used for distribution purposes.

Items

1. Circuit breakers.
2. Conductors, including insulated and bare wires and cables.
3. Ground wires and clamps.
4. Insulators, including pin, suspension, and other types, and tie wire or clamps.
5. Lightning arresters.
6. Railroad and highway crossing guards.
7. Splices.
8. Switches.
9. Tree trimming, initial cost including the cost of permits therefor.
10. Other line devices.
11. Oil circuit reclosers (OCR).
12. Sectionalizers.
13. Labor costs for installation of OCRs and Sectionalizers, first only.

NOTE: The cost of conductors used solely for street lighting or signal systems shall not be included in this account but in Account 373, Street Lighting and Signal Systems.

366 Underground Conduit

This account shall include the cost installed of underground conduit and tunnels used for housing distribution cables or wires.

Items

1. Conduit, concrete, brick and tile, including iron pipe, fiber pipe, Murray duct, and standpipe on pole or tower.
2. Excavation, including shoring, bracing, bridging, backfill, and disposal of excess excavated material.
3. Foundations and settings specially constructed for and not expected to outlast the apparatus for which constructed.
4. Lighting systems.
5. Manholes, concrete or brick, including iron or steel frames and covers, hatchways, gratings, ladders, cable racks, and hangers permanently attached to manholes.
6. Municipal inspection.
7. Pavement disturbed, including cutting and replacing pavement, pavement base, and sidewalks.
8. Permits.
9. Protection of street openings.
10. Removal and relocation of subsurface obstructions.
11. Sewer connections, including drains, traps, tide valves, and check valves.
12. Sumps, including pumps.
13. Ventilating equipment.

NOTE: The cost of underground conduit used solely for street lighting or signal systems shall be included in Account 373, Street Lighting and Signal Systems.

367 Underground Conductors and Devices

This account shall include the cost installed of underground conductors and devices used for distribution purposes.

Items

1. Armored conductors, buried, including insulators, insulating materials, splices, potheads, and trenching.
2. Armored conductors, submarine, including insulators, insulating materials, splices in terminal chamber, and potheads.
3. Cables in standpipe, including pothead and connection from terminal chamber or manhole to insulators on pole.
4. Circuit breakers.
5. Fireproofing, in connection with any items listed herein.

6. Hollow-core oil-filled cable, including straight or stop joints, pressure tanks, auxiliary air tanks, feeding tanks, terminals, potheads and connections.
7. Lead and fabric covered conductors, including insulators, compound-filled, oil-filled or vacuum splices, and potheads.
8. Lightning arresters.
9. Municipal inspection.
10. Permits.
11. Protection of street openings.
12. Racking of cables.
13. Switches.
14. Other line devices.

NOTE: The cost of underground conductors and devices used solely for street lighting or signal systems shall be included in Account 373, Street Lighting and Signal Systems.

368 Line Transformers

A. This account shall include the cost installed of overhead and underground distribution line transformers and pole-type and underground voltage regulators owned by the utility, for use in transforming electricity to the voltage at which it is to be used by the customer, whether actually in service or held in reserve.

B. When a transformer is permanently retired from service, the original installed cost thereof shall be credited to this account.

C. The records covering line transformers shall be so kept that the utility can furnish the number of transformers of various capacities in service and those in reserve, and the location and the use of each transfer.

Items

1. Installation, labor of (first installation only).
2. Transformer cut-out boxes.
3. Transformer lightning arresters.
4. Transformers, line and network.
5. Capacitors.
6. Network protectors.
7. Voltage regulators.

NOTE: The cost of removing and resetting line transformers shall not be charged to this account but to Account 583, Overhead Line Expenses, or Account 584, Underground Line Expenses, as appropriate. The cost of line transformers used solely for street lighting or signal systems shall be included in Account 373, Street Lighting and Signal Systems.

369 Services

This account shall include the cost installed of overhead and underground conductors leading from a point where wires leave the last pole of the overhead system or the distribution box or manhole, or the top of the pole of the distribution line, to the point of connection with the customer's outlet or wiring. Conduit used for underground service conductors shall be included herein.

Items

1. Brackets.
2. Cables and wires.
3. Conduit.
4. Insulators.
5. Municipal inspection.
6. Overhead to underground, including conduit or standpipe and conductor from last splice on pole to connection with customer's wiring.
7. Pavement disturbed, including cutting and replacing pavement, pavement base, and sidewalks.
8. Permits.
9. Protection of street openings.
10. Service switch.
11. Suspension wire.

370 Meters

A. This account shall include the cost installed of meters or devices and appurtenances thereto, for use in measuring the electricity delivered to its users, whether actually in service or held in reserve.

B. When a meter is permanently retired from service, the installed cost included herein shall be credited to this account.

C. The records covering meters shall be so kept that the utility can furnish information as to the number of meters of various capacities in service and in reserve as well as the location of each meter owned.

Items

1. Alternate current, watt-hour meters.
2. Current limiting devices.
3. Demand indicators.
4. Demand meters.

5. Direct current watt-hour meters.
6. Graphic demand meters.
7. Installation, labor of (first installation only).
8. Instrument transformers.
9. Maximum demand meters.
10. Meter badges and their attachments.
11. Meter boards and boxes.
12. Meter fittings, connections, and shelves (first set).
13. Meter switches and cut-outs.
14. Prepayment meters.
15. Protective devices.
16. Testing new meters.

NOTE A: This account shall not include meters for recording output of a generating station, or substation meters. It includes only those meters used to record energy delivered to customers.

NOTE B: The cost of removing and resetting meters shall be charged to Account 586, Meter Expenses.

371 Installations on Customers' Premises

This account shall include the cost installed of equipment on the customer's side of a meter when the utility incurs such cost and when the utility retains title to and assumes full responsibility for maintenance and replacement of such property. This account shall not include leased equipment. (See Account 372, Leased Property on Customers' Premises.)

Items

1. Cable vaults.
2. Commercial lamp equipment.
3. Foundations and settings specially provided for equipment included herein.
4. Frequency changer sets.
5. Motor generator sets.
6. Motors.
7. Switchboard panels, high or low tension.
8. Wire and cable connections to incoming cables.

NOTE: Do not include in this account any costs incurred in connection with merchandising, jobbing, or contract work activities.

372 Leased Property on Customers' Premises

This account shall include the cost of electric motors, transformers, and other equipment on customers' premises (including municipal corporations), leased or loaned to customers, but not including property held for sale.

NOTE A: The cost of setting and connecting such appliances or equipment on the premises of customers and the cost of resetting or removal shall not be charged to this account but to operating expenses, Account 587, Customer Installations Expenses.

NOTE B: Do not include in this account any costs incurred in connection with merchandising, jobbing, or contract work activities.

373 Street Lighting and Signal Systems

This account shall include the cost installed of equipment used wholly for public street and highway lighting or traffic, fire alarm, police, and other signal systems.

Items

1. Armored conductors, buried or submarine, including insulators, insulating materials, splices, and trenching.
2. Automatic control equipment.
3. Conductors, overhead or underground, including lead or fabric covered, parkway cables, including splices, and insulators.
4. Lamps, arc, incandescent, or other types, including glassware, suspension fixtures, and brackets.
5. Municipal inspection.
6. Ornamental lamp posts.
7. Pavement disturbed, including cutting and replacing pavement, pavement base, and sidewalks.
8. Permits.
9. Posts and standards.
10. Protection of street openings.
11. Relays or time clocks.
12. Series contactors.
13. Switches.
14. Transformers, pole or underground.

GENERAL PLANT

389 Land and Land Rights

This account shall include the cost of land and land rights used for utility purposes, the cost of which is not properly includible in other land and land rights accounts. (See §1767.16 (g).)

390 Structures and Improvements

This account shall include the cost, in place, of structures and improvements used for utility purposes, the cost of which is not properly includible in other structures and improvements accounts. (See §1767.16 (h).)

391 Office Furniture and Equipment

This account shall include the cost of office furniture and equipment owned by the utility and devoted to utility service, and not permanently attached to buildings, except the cost of such furniture and equipment which the utility elects to assign to other plant accounts on a functional basis.

Items

1. Bookcases and shelves.
2. Desks, chairs, and desk equipment.
3. Drafting-room equipment.
4. Filing, storage, and other cabinets.
5. Floor covering.
6. Library and library equipment.
7. Mechanical office equipment, such as accounting machines, and typewriters.
8. Safes.
9. Tables.

392 Transportation Equipment

This account shall include the cost of transportation vehicles used for utility purposes.

Items

1. Airplanes.
2. Automobiles.
3. Bicycles.
4. Electrical vehicles.
5. Motor trucks.
6. Motorcycles.
7. Repair cars or trucks.
8. Tractors and trailers.
9. Other transportation vehicles.

393 Stores Equipment

This account shall include the cost of equipment used for the receiving, shipping, handling, and storage of materials and supplies.

Items

1. Chain falls.
2. Counters.
3. Cranes (portable).
4. Elevating and stacking equipment (portable).
5. Hoists.
6. Lockers.
7. Scales.
8. Shelving.
9. Storage bins.
10. Trucks, hand and power driven.
11. Wheelbarrows.

394 Tools, Shop and Garage Equipment

This account shall include the cost of tools, implements, and equipment used in construction, repair work, general shops and garages and not specifically provided for or includible in other accounts.

Items

1. Air compressors.
2. Anvils.
3. Automobile repair shop equipment.
4. Battery charging equipment.
5. Belts, shafts and countershafts.
6. Boilers.
7. Cable pulling equipment.
8. Concrete mixers.
9. Drill presses.
10. Derricks.
11. Electric equipment.
12. Engines.
13. Forges.
14. Furnaces.
15. Foundations and settings specially constructed for and not expected to outlast the equipment for which provided.
16. Gas producers.
17. Gasoline pumps, oil pumps, and storage tanks.
18. Greasing tools and equipment.
19. Hoists.
20. Ladders.
21. Lathes.
22. Machine tools.
23. Motor-driven tools.
24. Motors.

25. Pipe threading and cutting tools.
26. Pneumatic tools.
27. Pumps.
28. Riveters.
29. Smithing equipment.
30. Tool racks.
31. Vises.
32. Welding apparatus.
33. Work benches.

395 Laboratory Equipment

This account shall include the cost installed of laboratory equipment used for general laboratory purposes and not specifically provided for or includible in other departmental or functional plant accounts.

Items

1. Ammeters.
2. Current batteries.
3. Frequency changers.
4. Galvanometers.
5. Inductometers.
6. Laboratory standard millivolt meters.
7. Laboratory standard volt meters.
8. Meter-testing equipment.
9. Millivolt meters.
10. Motor generator sets.
11. Panels.
12. Phantom loads.
13. Portable graphic ammeters, voltmeters, and wattmeters.
14. Portable loading devices.
15. Potential batteries.
16. Potentiometers.
17. Rotating standards.
18. Standard cell, reactance, resistor, and shunt.
19. Switchboards.
20. Synchronous timers.
21. Testing panels.
22. Testing resistors.
23. Transformers.
24. Voltmeters.
25. Other testing, laboratory, or research equipment not provided for elsewhere.

396 Power Operated Equipment

This account shall include the cost of power operated equipment used in construction or repair work exclusive of equipment includible in other accounts. Include, also, the tools and accessories acquired for use with such equipment and the vehicle on which such equipment is mounted.

Items

1. Air compressors, including driving unit and vehicle.
2. Back filling machines.
3. Boring machines.
4. Bulldozers.
5. Cranes and hoists.
6. Diggers.
7. Engines.
8. Pile drivers.
9. Pipe cleaning machines.
10. Pipe coating or wrapping machines.
11. Tractors-Crawler type.
12. Trenchers.
13. Other power operated equipment.

NOTE: It is intended that this account include only such large units as are generally self-propelled or mounted on movable equipment.

397 Communication Equipment

This account shall include the cost installed of telephone, telegraph, and wireless equipment for general use in connection with utility operations.

Items

1. Antennae.
2. Booths.
3. Cables.
4. Distributing boards.
5. Extension cords.
6. Gongs.
7. Hand sets, manual and dial.
8. Insulators.
9. Intercommunicating sets.
10. Loading coils.
11. Operators' desks.
12. Poles and fixtures used wholly for telephone or telegraph wire.
13. Radio transmitting and receiving sets.
14. Remote control equipment and lines.
15. Sending keys.
16. Storage batteries.
17. Switchboards.
18. Telautograph circuit connections.
19. Telegraph receiving sets.
20. Telephone and telegraph circuits.
21. Testing instruments.
22. Towers.
23. Underground conduit used wholly for telephone or telegraph wires and cable wires.

398 Miscellaneous Equipment

This account shall include the cost of equipment, and apparatus used in the utility operations, which is not includible in other accounts.

Items

1. Hospital and infirmary equipment.
2. Kitchen equipment.
3. Employees' recreation equipment.
4. Radios.
5. Restaurant equipment.
6. Soda fountains.
7. Operators' cottage furnishings.
8. Other miscellaneous equipment.

NOTE: Miscellaneous equipment of the nature indicated above wherever practicable, shall be included in the utility plant accounts on a functional basis.

399 Other Tangible Property

This account shall include the cost of tangible utility plant not provided for elsewhere.

§ 1767.21 Operating income.

The operating income accounts identified in this section shall be used by all RUS borrowers.

UTILITY OPERATING INCOME

400 Operating Revenues
401 Operation Expense
402 Maintenance Expense
403 Depreciation Expense
403.1 Depreciation Expense—Steam Production Plant
403.2 Depreciation Expense—Nuclear Production Plant
403.3 Depreciation Expense—Hydraulic Production Plant
403.4 Depreciation Expense—Other Production Plant
403.5 Depreciation Expense—Transmission Plant
403.6 Depreciation Expense—Distribution Plant
403.7 Depreciation Expense—General Plant
404 Amortization of Limited-Term Electric Plant
405 Amortization of Other Electric Plant
406 Amortization of Electric Plant Acquisition Adjustments
407 Amortization of Property Losses, Unrecovered Plant and Regulatory Study Costs
407.3 Regulatory Debits
407.4 Regulatory Credits
408 Taxes Other than Income Taxes
408.1 Taxes—Property
408.2 Taxes—U.S. Social Security—Unemployment
408.3 Taxes—U.S. Social Security—F.I.C.A.
408.4 Taxes—State Social Security—Unemployment
408.5 Taxes—State Sales—Consumers
408.6 Taxes—Gross Revenue or Gross Receipts Tax
408.7 Taxes—Other
409 [Reserved]
409.1 Income Taxes, Utility Operating Income
409.2 Income Taxes, Other Income and Deductions
409.3 Income Taxes, Extraordinary Items
410 [Reserved]
410.1 Provision for Deferred Income Taxes, Utility Operating Income
410.2 Provision for Deferred Income Taxes, Other Income and Deductions
411 [Reserved]
411.1 Provision for Deferred Income Taxes—Credit, Utility Operating Income
411.2 Provision for Deferred Income Taxes—Credit, Other Income and Deductions
411.3 [Reserved]
411.4 Investment Tax Credit Adjustments, Utility Operations
411.5 Investment Tax Credit Adjustments, Nonutility Operations
411.6 Gains from Disposition of Utility Plant
411.7 Losses from Disposition of Utility Plant
411.8 Gains from Disposition of Allowances
411.9 Losses from Disposition of Allowances
412 Revenues from Electric Plant Leased to Others
413 Expenses of Electric Plant Leased to Others
414 Other Utility Operating Income

UTILITY OPERATING INCOME

400 Operating Revenues

There shall be shown under this caption the total amount included in the electric operating revenue accounts provided herein.

401 Operation Expense

There shall be shown under this caption the total amount included in the electric operation expense accounts provided herein. (See note to § 1767.17 (c).)

402 Maintenance Expense

There shall be shown under this caption the total amount included in the electric maintenance expense accounts provided herein.

403 Depreciation Expense

A. This account shall include the amount of depreciation expense for all classes of depreciable electric plant in service except such depreciation expense as is chargeable to clearing accounts or to Account 416, Costs and Expenses of Merchandising, Jobbing and Contract Work.

B. The utility shall keep such records of property and property retirements as will reflect the service life of property which has been retired and aid in estimating probable service life by mortality, turnover, or other appropriate methods; and also such records as will reflect the percentage of salvage and costs of removal for property retired from each account, or subdivision thereof, for depreciable electric plant.

NOTE A: Depreciation expense applicable to property included in Account 104, Electric Plant Leased to Others, shall be charged to Account 413, Expenses of Electric Plant Leased to Others.

NOTE B: Depreciation expenses applicable to transportation equipment, shop equipment, tools, work equipment, power operated equipment, and other general equipment may be charged to clearing accounts as necessary in order to obtain a proper distribution of expenses between construction and operation.

NOTE C: Depreciation expense applicable to transportation equipment used for transportation of fuel from the point of acquisition to the unloading point shall be charged to Account 151, Fuel Stock.

C. Account 403 shall be subaccounted as follows:

403.1 Depreciation Expense—Steam Production Plant
403.2 Depreciation Expense—Nuclear Production Plant
403.3 Depreciation Expense—Hydraulic Production Plant
403.4 Depreciation Expense—Other Production Plant
403.5 Depreciation Expense—Transmission Plant
403.6 Depreciation Expense—Distribution Plant
403.7 Depreciation Expense—General Plant

404 Amortization of Limited-Term Electric Plant

This account shall include amortization charges applicable to amounts included in the electric plant accounts for limited-term franchises, licenses, patent rights, limited-term interests in land, and expenditures on leased property where the service life of the improvements is terminable by action of the lease. The charges to this account shall be such as to distribute the book cost of each investment as evenly as may be over the period of its benefit to the utility. (See Account 111, Accumulated Provision for Amortization of Electric Utility Plant.)

405 Amortization of Other Electric Plant

A. When authorized by RUS, this account shall include charges for amortization of intangible or other electric utility plant which does not have a definite or terminable life and which is not subject to charges for depreciation expense.

B. This account shall be supported in such detail as to show the amortization applicable to each investment being amortized, together with the book cost of the investment and the period over which it is being written off.

406 Amortization of Electric Plant Acquisition Adjustments

This account shall be debited or credited, as appropriate, with amounts includible in operating expenses, pursuant to approval or order of RUS, for the purpose of providing for the extinguishment of the amount in Account 114, Electric Plant Acquisition Adjustments.

407 Amortization of Property Losses, Unrecovered Plant and Recovery Study Costs

This account shall be charged with amounts credited to Account 182.1, Extraordinary Property Losses, when RUS has authorized the amount in the latter account to be amortized by charges to electric operations.

407.3 Regulatory Debits

This account shall be debited, when appropriate, with the amounts credited to Account 254, Other Regulatory Liabilities, to record regulatory liabilities imposed on the utility by the ratemaking actions of regulatory agencies. This account shall also be debited,

when appropriate, with the amounts credited to Account 182.3, Other Regulatory Assets, concurrent with the recovery of such amounts in rates.

407.4 Regulatory Credits

This account shall be credited, when appropriate, with the amounts debited to Account 182.3, Other Regulatory Assets, to establish regulatory assets. This account shall also be credited, when appropriate, with the amounts debited to Account 254, Other Regulatory Liabilities, concurrent with the return of such amounts to customers through rates.

408 Taxes Other Than Income Taxes

A. This account shall include the amounts of ad valorem, gross revenue, or gross receipts taxes, state unemployment insurance, franchise taxes, Federal excise taxes, social security taxes, and all other taxes assessed by Federal, state, county, municipal, or other local governmental authorities, except income taxes.

B. These accounts shall be charged in each accounting period with the amounts of taxes which are applicable thereto, with concurrent credits to Account 236, Taxes Accrued, or Account 165, Prepayments, as appropriate. When it is not possible to determine the exact amounts of taxes, the amounts shall be estimated and adjustments made in current accruals as the actual tax levies become known.

C. The charges to these accounts shall be made or supported so as to show the amount of each tax and the basis upon which each charge is made. In the case of a utility rendering more than one utility service, taxes of the kind includible in these accounts shall be assigned directly to the utility department the operation of which gave rise to the tax, in so far as practicable. Where the tax is not attributable to a specific utility department, it shall be distributed among the utility departments or nonutility operations on an equitable basis after appropriate study to determine such basis.

NOTE A: Special assessments for street and similar improvements shall be included in the appropriate utility plant or nonutility property account.

NOTE B: Taxes specifically applicable to construction and retirement activities shall be included in the cost of construction or the retirement.

NOTE C: Gasoline and other sales taxes shall be charged as far as practicable to the same account as the materials on which the tax is levied.

NOTE D: Social security and other forms of payroll taxes shall be charged to nonutility operations, the specific functional operations, maintenance, and administrative expense accounts, and to construction and retirement activities on a basis related to payroll either directly or by transfers from this account.

NOTE E: Property taxes applicable to the various utility functions shall be charged to the specific functional operations and administrative expense accounts either directly or by transfers from this account.

NOTE F: Interest on tax refunds or deficiencies shall not be included in these accounts but in Account 419, Interest and Dividend Income, or Account 431, Other Interest Expense, as appropriate.

D. Account 408 shall be subaccounted as follows:

408.1 Taxes—Property
408.2 Taxes—U.S. Social Security—Unemployment
408.3 Taxes—U.S. Social Security—F.I.C.A.
408.4 Taxes—State Social Security—Unemployment
408.5 Taxes—State Sales—Consumers
408.6 Taxes—Gross Revenue or Gross Receipts Tax
408.7 Taxes—Other

409 [Reserved]

SPECIAL INSTRUCTIONS

Accounts 409.1, 409.2, and 409.3

A. These accounts shall include the amount of local, state, and Federal income taxes on income properly accruable during the period covered by the income statement to meet the actual liability for such taxes. Concurrent credits for the tax accruals shall be made to Account 236, Taxes Accrued, and as the exact amounts of taxes become known, the current tax accruals shall be adjusted by charges or credits to these accounts.

B. The accruals for income taxes shall be apportioned among utility departments and to Other Income and Deductions so that, as nearly as practicable, each tax shall be included in the expenses of the utility department

or Other Income and Deductions, the income from which gave rise to the tax. The tax effects relating to interest charges shall be allocated between utility and nonutility operations. The basis for this allocation shall be the ratio of net investment in utility plant to net investment in nonutility plant.

NOTE A: Taxes assumed by the utility on interest shall be charged to Account 431, Other Interest Expense.

NOTE B: Interest on tax refunds or deficiencies shall not be included in these accounts but in Account 419, Interest and Dividend Income, or Account 431, Other Interest Expense, as appropriate.

409.1 Income Taxes, Utility Operating Income

This account shall include the amount of those local, state, and Federal income taxes which relate to utility operating income. This account shall be maintained so as to allow ready identification of tax effects (both positive and negative) relating to Utility Operating Income (by department), Utility Plant Leased to Others, and Other Utility Operating Income.

409.2 Income Taxes, Other Income and Deductions

This account shall include the amount of those local, state, and Federal income taxes (both positive and negative), which relate to Other Income and Deductions.

409.3 Income Taxes, Extraordinary Items

This account shall include the amount of those local, state, and Federal income taxes (both positive and negative), which relate to Extraordinary Items.

410 [Reserved]

SPECIAL INSTRUCTIONS

Accounts 410.1, 410.2, 411.1, and 411.2

A. Accounts 410.1 and 410.2 shall be debited, and Accumulated Deferred Income Taxes, shall be credited, with amounts equal to any current deferrals of taxes on income or any allocations of deferred taxes originating in prior periods, as provided by the texts of Accounts 190, 281, 282, and 283. There shall not be netted against entries required to be made to these accounts any credit amounts appropriately includible in Account 411.1 or Account 411.2.

B. Accounts 411.1 or 411.2 shall be credited, and Accumulated Deferred Income Taxes, shall be debited, with amounts equal to any allocations of deferred taxes originating in prior periods or any current deferrals of taxes on income, as provided by the texts of Accounts 190, 281, 282, and 283. There shall not be netted against entries required to be made to these accounts any debit amounts appropriately includible in Account 410.1 or Account 410.2.

410.1 Provision for Deferred Income Taxes, Utility Operating Income

This account shall include the amounts of those deferrals of taxes and allocations of deferred taxes which relate to Utility Operating Income (by department).

410.2 Provision for Deferred Income Taxes, Other Income and Deductions

This account shall include the amounts of those deferrals of taxes and allocations of deferred taxes which relate to Other Income and Deductions.

411 [Reserved]

411.1 Provision for Deferred Income Taxes—Credit, Utility Operating Income

This account shall include the amounts of those allocations of deferred taxes and deferrals of taxes, credit, which relate to Utility Operating Income (by department).

411.2 Provision for Deferred Income Taxes—Credit, Other Income and Deductions

This account shall include the amounts of those allocations of deferred taxes and deferrals of taxes, credit, which relate to Other Income and Deductions.

411.3 [Reserved]

SPECIAL INSTRUCTIONS

Accounts 411.4 and 411.5

A. Account 411.4 shall be debited with the amounts of investment tax credits related to electric utility property that are credited to Account 255, Accumulated Deferred Investment Tax Credits, by companies which do not apply the entire amount of the benefits of the investment credit as a reduction of the overall income tax expense in the year in which such credit is realized. (See Account 255).

B. Account 411.4 shall be credited with the amounts debited to Account 255 for proportionate amounts of tax credit deferrals allocated over the average useful life of electric utility property to which the tax credits relate or such lesser period of time as may be adopted and consistently followed by the company.

C. Account 411.5 shall be debited and credited as directed in paragraphs A and B, for investment tax credits related to nonutility property.

411.4 Investment Tax Credit Adjustments, Utility Operations

This account shall include the amount of those investment tax credit adjustments related to property used in Utility Operations (by department).

411.5 Investment Tax Credit Adjustments, Nonutility Operations

This account shall include the amount of those investment tax credit adjustments related to property used in Nonutility Operations.

411.6 Gains from Disposition of Utility Plant

This account shall include, as approved by RUS, amounts relating to gains from the disposition of future use utility plant including amounts which were previously recorded in and transferred from Account 105, Electric Plant Held for Future Use, under the Provisions of Paragraphs B, C, and D thereof. Income taxes relating to gains recorded in this account shall be recorded in Account 409.1, Income Taxes, Utility Operating Income.

411.7 Losses from Disposition of Utility Plant

This account shall include, as approved by RUS, amounts relating to losses from the disposition of future use utility plant including amounts which were previously recorded in and transferred from Account 105, Electric Plant Held for Future Use, under the provisions of Paragraphs B, C, and D thereof. Income taxes relating to losses recorded in this account shall be recorded in Account 409.1, Income Taxes, Utility Operating Income.

411.8 Gains from Disposition of Allowances

This account shall be credited with the gain on the sale, exchange, or other disposition of allowances in accordance with §1767.15 (u)(8). Income taxes relating to gains recorded in this account shall be recorded in Account 409.1, Income Taxes, Utility Operating Income.

411.9 Losses from Disposition of Allowances

This account shall be debited with the loss on the sale, exchange, or other disposition of allowances in accordance with §1767.15 (u)(8). Income taxes relating to losses recorded in this account shall be recorded in Account 409.1, Income Taxes, Utility Operating Income.

412 Revenues from Electric Plant Leased to Others

This account shall include revenues from electric property constituting a distinct operating unit or system leased by the utility to others, and which property is properly includible in Account 104, Electric Plant Leased to Others.

NOTE: Related taxes shall be recorded in Account 408, Taxes Other Than Income Taxes, or Account 409.1, Income Taxes, Utility Operating Income, as appropriate.

413 Expenses of Electric Plant Leased to Others

A. This account shall include expenses from electric property constituting a distinct operating unit or system leased by the utility to others,

and which property is properly includible in Account 104, Electric Plant Leased to Others.

B. The detail of expenses shall be kept or supported so as to show separately the following:

1. Operation.
2. Maintenance.
3. Depreciation.
4. Amortization.

NOTE: Related taxes shall be recorded in Account 408, Taxes Other Than Income Taxes, or Account 409.1, Income Taxes, Utility Operating Income, as appropriate.

414 Other Utility Operating Income

A. This account shall include the revenues received and expenses incurred in connection with the operations of utility plant, the book cost of which is included in Account 118, Other Utility Plant.

B. The expenses shall include every element of cost incurred in such operations, including depreciation, rents, and insurance.

NOTE: Related taxes shall be recorded in Account 408, Taxes Other Than Income Taxes, or Account 409.1, Income Taxes, Utility Operating Income, as appropriate.

[58 FR 59825, Nov. 10, 1993, as amended at 62 FR 42290, Aug. 6, 1997]

§ 1767.22 Other income and deductions.

The other income and deductions accounts identified in this section shall be used by all RUS borrowers.

OTHER INCOME AND DEDUCTIONS

415 Revenues from Merchandising, Jobbing, and Contract Work
416 Costs and Expenses of Merchandising, Jobbing, and Contract Work
417 Revenues from Nonutility Operations
417.1 Expenses of Nonutility Operations
418 Nonoperating Rental Income
418.1 Equity in Earnings of Subsidiary Companies
419 Interest and Dividend Income
419.1 Allowance for Funds Used During Construction
420 Investment Tax Credits
421 Miscellaneous Nonoperating Income
421.1 Gain on Disposition of Property
421.2 Loss on Disposition of Property
422 Nonoperating Taxes
423 Generation and Transmission Cooperative Capital Credits
424 Other Capital Credits and Patronage Capital Allocations
425 Miscellaneous Amortization
426 [Reserved]
426.1 Donations
426.2 Life Insurance
426.3 Penalties
426.4 Expenditures for Certain Civic, Political, and Related Activities
426.5 Other Deductions

OTHER INCOME AND DEDUCTIONS

415 Revenues from Merchandising, Jobbing and Contract Work

A. This account shall include all revenues derived from the sale of merchandise and jobbing or contract work, including any profit or commission accruing to the utility on jobbing work performed by it as agent under contracts whereby it does jobbing work for another for a stipulated profit or commission. Interest related income from installment sales shall be recorded in Account 419, Interest and Dividend Income.

B. Records in support of this account shall be so kept as to permit ready summarization of revenues by such major items as are feasible.

NOTE: The classification of revenues of merchandising, jobbing, and contract work as nonoperating, and thus included in this account, is for accounting purposes. It does not preclude consideration of justification to the contrary for ratemaking or other purposes.

Items

1. Revenues from sale of merchandise and from jobbing and contract work.
2. Discounts and allowances made in settlement of bills for merchandise and jobbing work.

416 Costs and Expenses of Merchandising, Jobbing and Contract Work

A. This account shall include all expenses derived from the sale of merchandise and jobbing or contract work.

B. Records in support of this account shall be so kept as to permit ready summarization of costs and expenses by such major items as are feasible.

NOTE: The classification of costs and expenses of merchandising, jobbing, and contract work as nonoperating, and thus included in this account, is for accounting purposes. It does not preclude consideration of

justification to the contrary for ratemaking or other purposes.

Items

Labor:

1. Canvassing and demonstrating appliances in homes and other places for the purpose of selling appliances.
2. Demonstrating and selling activities in sales rooms.
3. Installing appliances on customer premises where such work is done only for purchasers of appliances from the utility.
4. Installing wire, piping, or other property work, on a jobbing or contract basis.
5. Preparing advertising materials for appliance sales purposes.
6. Receiving and handling customer orders for merchandise or for jobbing services.
7. Cleaning and tidying sales rooms.
8. Maintaining display counters and other equipment used in merchandising.
9. Arranging merchandise in sales rooms and decorating display windows.
10. Reconditioning repossessed appliances.
11. Bookkeeping and other clerical work in connection with merchandise and jobbing activities.
12. Supervising merchandise and jobbing operations.
13. Advertising in newspapers, periodicals, radio, and television.
14. Cost of merchandise sold and of materials used in jobbing work.
15. Stores expenses on merchandise and jobbing stocks.
16. Fees and expenses of advertising and commercial artists' agencies.
17. Printing booklets, dodgers, and other advertising data.
18. Premiums given as inducement to buy appliances.
19. Light, heat, and power.
20. Depreciation on equipment used primarily for merchandise and jobbing operations.
21. Rent of sales rooms or of equipment.
22. Transportation expense in delivery and pick-up of appliances by utility's facilities or by others.
23. Stationery and office supplies and expenses.
24. Losses from uncollectible merchandise and jobbing accounts.

417 Revenues from Nonutility Operations

This account shall include revenues applicable to operations which are nonutility in character but nevertheless constitute a distinct operating activity of the enterprise as a whole, such as the operation of an ice department where applicable statutes do not define such operation as a utility, or the operation of a servicing organization for furnishing supervision, management, engineering, and similar services to others.

NOTE: Related taxes shall be recorded in Account 408, Taxes Other Than Income Taxes, or Account 409.2, Income Taxes, Other Income and Deductions, as appropriate.

417.1 Expenses of Nonutility Operations

A. This account shall include expenses applicable to operations which are nonutility in character but nevertheless constitute a distinct operating activity of the enterprise as a whole, such as the operation of an ice department where applicable statutes do not define such operation as a utility, or the operation of a servicing organization for furnishing supervision, management, engineering, and similar services to others.

B. The expenses shall include all elements of costs incurred in such operations, and the accounts shall be maintained so as to permit ready summarization as follows:

1. Operation.
2. Maintenance.
3. Rents.
4. Depreciation.
5. Amortization.

NOTE: Related taxes shall be recorded in Account 408, Taxes Other Than Income Taxes, or Account 409.2, Income Taxes, Other Income and Deductions, as appropriate.

418 Nonoperating Rental Income

A. This account shall include all rent revenues and related expenses of land, buildings, or other property included in Account 121, Nonutility Property,

which is not used in operations covered by Account 417 or Account 417.1.

B. The expenses shall include all elements of costs incurred in the ownership and rental of property and the accounts shall be maintained so as to permit ready summarization as follows:

1. Operation.
2. Maintenance.
3. Rents.
4. Depreciation.
5. Amortization.

NOTE: Related taxes shall be recorded in Account 408, Taxes Other Than Income Taxes, or Account 409.2, Income Taxes, Other Income and Deductions, as appropriate.

418.1 Equity in Earnings of Subsidiary Companies

This account shall include the utility's equity in the earnings or losses of subsidiary companies for the year.

419 Interest and Dividend Income

A. This account shall include interest revenues on securities, loans, notes, advances, special deposits, tax refunds, and all other interest-bearing assets, and dividends on stocks of other companies, whether the securities on which the interest and dividends are received are carried as investments or included in sinking or other special fund accounts.

NOTE A: Related taxes shall be recorded in Account 408, Taxes Other Than Income Taxes, or Account 409.2, Income Taxes, Other Income and Deductions, as appropriate.

NOTE B: Interest accrued, the payment of which is not reasonably assured, dividends receivable which have not been declared or guaranteed, and interest or dividends upon reacquired securities issued or assumed by the utility shall not be credited to this account.

419.1 Allowance for Funds Used During Construction

This account shall include concurrent credits for allowance for funds other than borrowed funds used for construction purposes during the period of construction, based upon a reasonable rate. (See § 1767.16 (c)(17).)

420 Investment Tax Credits

This account shall be credited as follows with investment tax credit amounts not passed on to customers:

1. By amounts equal to debits to Account 411.4, Investment Tax Credit Adjustments, Utility Operations, and Account 411.5, Investment Tax Credit Adjustments, Nonutility Operations, for investment tax credits used in calculating income taxes for the year when the company's accounting provides for non-deferral of all or a portion of such credits.

2. By amounts equal to debits to Account 255, Accumulated Deferred Investment Tax Credits, for proportionate amounts of tax credit deferrals allocated over the average useful life of the property to which the tax credits relate, or such lesser period of time as may be adopted and consistently used by the company.

421 Miscellaneous Nonoperating Income

This account shall include all revenue and expense items, except taxes properly includible in the income account, not provided for elsewhere. Related taxes shall be recorded in Account 408, Taxes Other Than Income Taxes, or Account 409.2, Income Taxes, Other Income and Deductions, as appropriate.

Items

1. Profit on sale of timber. (See § 1767.16 (g)(3).)
2. Profits from operations of others realized by the utility under contracts.
3. Gains on disposition of investments. Also, gains on reacquisition and resale or retirement of the utility's debt securities when the gain is not amortized or used by a jurisdictional regulatory agency to reduce embedded debt cost in establishing rates. (See § 1767.15 (q).)

421.1 Gain on Disposition of Property

This account shall be credited with the gain on the sale, conveyance, exchange, or transfer of utility or other property to another. Amounts relating to gains on land and land rights held for future use recorded in Account 105, Electric Plant Held for Future Use,

will be accounted for as prescribed in Paragraphs B, C, and D thereof. (See §1767.16 (e)(6), (g)(5), and (j)(5).) Income taxes on gains recorded in this account shall be recorded in Account 409.2, Income Taxes, Other Income and Deductions.

421.2 Loss on Disposition of Property

This account shall be charged with the loss on the sale, conveyance, exchange, or transfer of utility or other property to another. Amounts relating to losses on land and land rights held for future use recorded in Account 105, Electric Plant Held for Future Use, will be accounted for as prescribed in Paragraphs B, C, and D thereof. (See §1767.16 (e)(6), (g)(5), and (j)(5).) The reduction in income taxes relating to losses recorded in this account shall be recorded in Account 409.2, Income Taxes, Other Income and Deductions.

422 Nonoperating Taxes

This account shall be charged with taxes relating to nonoperating income.

423 Generation and Transmission Cooperative Capital Credits

This account shall be credited with the annual capital furnished the power supply cooperative through payment of power bills. The amount of capital furnished the power supply cooperative should be recorded in the applicable year even though, in most cases, the power supplier's notice of the allocation will not have been received until after the close of the year to which it relates.

424 Other Capital Credits and Patronage Capital Allocations

This account shall be credited with the capital furnished in connection with patronage of cooperative or mutual-type service organization such as CFC and other financing cooperatives, and insurance, oil product, telephone, and data processing cooperatives. This account should be credited in the year in which the notice of the capital credit or patronage capital allocation is received.

425 Miscellaneous Amortization

This account shall include amortization charges not includible in other accounts which are properly deductible in determining the income of the utility before interest charges. Charges includible herein, if significant in amount, must be in accordance with an orderly and systematic amortization program.

Items

1. Amortization of utility plant acquisition adjustments, or of intangibles included in utility plant in service when not authorized to be included in utility operating expenses by RUS.
2. Other miscellaneous amortization charges allowed to be included in this account by RUS.

426 [Reserved]

SPECIAL INSTRUCTIONS

Accounts 426.1, 426.2, 426.3, 426.4, and 426.5

These accounts shall include miscellaneous expense items which are nonoperating in nature but which are properly deductible before determining total income before interest charges.

NOTE: The classification of expenses as nonoperating and their inclusion in these accounts is for accounting purposes. It does not preclude RUS consideration of proof to the contrary for ratemaking or other purposes.

426.1 Donations

This account shall include all payments or donations for charitable, social, or community welfare purposes.

426.2 Life Insurance

This account shall include all payments for life insurance of officers and employees where the company is the beneficiary (net premiums less the increase in the cash surrender value of policies.)

426.3 Penalties

This account shall include payments by the company for penalties or fines for violation of any regulatory statutes by the company or its officials.

426.4 Expenditures for Certain Civic, Political, and Related Activities

This account shall include expenditures for the purpose of influencing public opinion with respect to the election or appointment of public officials, referenda, legislation, or ordinances (either with respect to the possible adoption of new referenda, legislation or ordinances or repeal or modification of existing referenda, legislation or ordinances) or approval, modification, or revocation of franchises; or for the purpose of influencing the decisions of public officials, but shall not include such expenditures which are directly related to appearances before regulatory or other governmental bodies in connection with the reporting utility's existing or proposed operations.

426.5 Other Deductions

This account shall include other miscellaneous expenses which are nonoperating in nature, but which are properly deductible before determining total income before interest charges.

Items

1. Loss relating to investments in securities written-off or written-down.
2. Loss on sale of investments.
3. Loss on reacquisition, resale, or retirement of the utility's debt securities, when the loss is not amortized and used by a jurisdictional regulatory agency to increase embedded debt cost in establishing rates. (See § 1767.15 (q).)
4. Preliminary survey and investigation expenses related to abandoned projects, when not written-off to the appropriate operating expense account.
5. Costs of preliminary abandonment costs recorded in Account 182.1, Extraordinary Property Losses, and Account 182.2, Unrecovered Plant and Regulatory Study Costs, not allowed to be amortized to Account 407, Amortization of Property Losses, Unrecovered Plant and Regulatory Study Costs.

§ 1767.23 Interest charges.

The interest charges accounts identified in this section shall be used by all RUS borrowers.

INTEREST CHARGES

427 Interest on Long-Term Debt
427.3 Interest Charged to Construction—Credit
428 Amortization of Debt Discount and Expense
428.1 Amortization of Loss on Reacquired Debt
429 Amortization of Premium on Debt—Credit
429.1 Amortization of Gain on Reacquired Debt—Credit
430 Interest on Debt to Associated Companies
431 Other Interest Expense
432 Allowance for Borrowed Funds Used During Construction—Credit

INTEREST CHARGES

427 Interest on Long-Term Debt

A. This account shall include the amount of interest on outstanding long-term debt issued or assumed by the utility, the liability for which included in Account 221, Bonds, or Account 224, Other Long-Term Debt.

B. This account shall be so kept or supported as to show the interest accruals on each class and series of long-term debt.

NOTE: This account shall not include interest on nominally issued or nominally outstanding long-term debt, including securities assumed.

427.3 Interest Charged to Construction—Credit

This account shall include concurrent credits for interest charged to construction based upon the net cost for the period of construction of borrowed funds used for construction purposes.

428 Amortization of Debt Discount and Expense

A. This account shall include the amortization of unamortized debt discount and expense on outstanding long-term debt. Amounts charged to this account shall be credited concurrently to Account 181, Unamortized Debt Expense, and Account 226, Unamortized Discount on Long-Term Debt—Debit.

B. This account shall be so kept or supported as to show the debt discount and expense on each class and series of long-term debt.

428.1 Amortization of Loss on Reacquired Debt

A. This account shall include the amortization of the losses on reacquisition of debt. Amounts charged to this account shall be credited concurrently to Account 189, Unamortized Loss on Reacquired Debt.

B. This account shall be maintained so as to allow ready identification of the loss amortized applicable to each class and series of long-term debt reacquired. (See §1767.15 (q).)

429 Amortization of Premium on Debt—Credit

A. This account shall include the amortization of unamortized net premium on outstanding long-term debt. Amounts credited to this account shall be charged concurrently to Account 225, Unamortized Premium on Long-Term Debt.

B. This account shall be so kept or supported as to show the premium on each class and series of long-term debt.

429.1 Amortization of Gain on Reacquired Debt—Credit

A. This account shall include the amortization of the gains realized from reacquisition of debt. Amounts credited to this account shall be charged concurrently to Account 257, Unamortized Gain on Reacquired Debt.

B. This account shall be maintained so as to allow ready identification of the amortized gains applicable to each class and series of long-term debt reacquired. (See §1767.15 (q).)

430 Interest on Debt to Associated Companies

A. This account shall include the interest accrued on amounts included in Account 223, Advances from Associated Companies, and on all other obligations to associated companies.

B. The records supporting the entries to this account shall be so kept as to show to whom the interest is to be paid, the period covered by the accrual, the rate of interest, and the principal amount of the advances or other obligations on which the interest is accrued.

431 Other Interest Expense

This account shall include all interest charges not provided for elsewhere.

Items

1. Interest on notes payable on demand or maturing one year or less from date and on open accounts, except notes and accounts with associated companies.
2. Interest on customers' deposits.
3. Interest on claims and judgments, tax assessments, and assessments for public improvements past due.
4. Income and other taxes levied upon bondholders of the utility and assumed by it.

432 Allowance for Borrowed Funds Used During Construction—Credit

This account shall include concurrent credits for allowance for borrowed funds used during construction, not to exceed amounts computed in accordance with the formula prescribed in §1767.16 (c)(17).

§1767.24 Extraordinary items.

The extraordinary items accounts identified in this section shall be used by all RUS borrowers.

EXTRAORDINARY ITEMS

434 Extraordinary Income
435 Extraordinary Deductions
435.1 Cumulative Effect on Prior Years of a Change in Accounting Principle

EXTRAORDINARY ITEMS

434 Extraordinary Income

This account shall be credited with nontypical, noncustomary, infrequently recurring gains which would significantly distort the current year's income computed before extraordinary items, if reported other than as extraordinary items. Income tax relating to the amounts recorded in this account shall be recorded in Account 409.3, Income Taxes, Extraordinary Items. (See §1767.15 (g).)

435 Extraordinary Deductions

This account shall be debited with nontypical, noncustomary, infrequently recurring losses which would significantly distort the current year's

income computed before extraordinary items, if reported other than as extraordinary items. Income tax relating to the amounts recorded in this account shall be recorded in Account 409.3, Income Taxes, Extraordinary Items. (See § 1767.15 (f).)

435.1 Cumulative Effect on Prior Years of a Change in Accounting Principle

This account shall include the cumulative effect on margins of prior periods as a result of a change in accounting principle from one that is no longer generally accepted to one that is generally accepted.

§ 1767.25 Retained earnings.

The retained earnings accounts identified in this section shall be used by all RUS borrowers.

RETAINED EARNINGS

433 [Reserved]
436 [Reserved]
437 [Reserved]
438 [Reserved]
439 [Reserved]

RETAINED EARNINGS

433 [Reserved]

436 [Reserved]

437 [Reserved]

438 [Reserved]

439 [Reserved]

§ 1767.26 Operating revenue.

The operating revenue accounts identified in this section shall be used by all RUS borrowers.

OPERATING REVENUE

Sales of Electricity

440 Residential Sales
440.1 Residential Sales—Excluding Seasonal
440.2 Residential Sales—Seasonal
441 Irrigation Sales
442 Commercial and Industrial Sales
442.1 Commercial and Industrial Sales—1000 kVA or Less
442.2 Commercial and Industrial Sales—Over 1000 kVA
444 Public Street and Highway Lighting
445 Other Sales to Public Authorities
446 Sales to Railroads and Railways
447 Sales for Resale
447.1 Sales for Resale—RUS Borrowers
447.2 Sales for Resale—Other
448 Interdepartmental Sales
449.1 Provision for Rate Refunds

Other Operating Revenues

450 Forfeited Discounts
451 Miscellaneous Service Revenues
453 Sales of Water and Water Power
454 Rent from Electric Property
455 Interdepartmental Rents
456 Other Electric Revenues

OPERATING REVENUE

Sales of Electricity

440 Residential Sales

A. This account shall include the net billing for electricity supplied for residential or domestic purposes.

NOTE: When electricity supplied through a single meter is used for both residential and commercial purposes, the total revenue shall be included in this account, or Account 442, Commercial and Industrial Sales, according to the rate schedule that is applied. If the same rate schedules apply to residential and commercial and industrial service, classification shall be made according to principal use.

B. Account 440 shall be subaccounted as follows:

440.1 Residential Sales—Excluding Seasonal
440.2 Residential Sales—Seasonal

440.1 Residential Sales—Excluding Seasonal

A. This account shall include the net billing for electricity supplied for residential and domestic purposes.

B. This account shall also include net billings for single phase service to schools, churches, lodges, and other public buildings.

C. Records shall be maintained so that the quantity of electricity sold and the revenue received under each rate schedule shall be readily available.

NOTE: Net billings for multiphase service to schools, churches, lodges, and other public buildings shall be included in the appropriate subaccount of Account 442, Commercial and Industrial Sales.

440.2 Residential Sales—Seasonal

This account shall include the net billings for electricity supplied for residential and domestic purposes to seasonal consumers.

441 Irrigation Sales

This account shall include the net billings for electricity supplied for irrigation pumping. It need not be used unless such service is provided under a special irrigation rate.

442 Commercial and Industrial Sales

A. This account shall include the net billing for electricity supplied to customers for commercial and industrial purposes.

NOTE A: If the utility classifies large commercial and industrial customers and related revenues on a lesser basis than 1000 kilowatts of demand, or segregates industrial customers and related revenues according to a recognized definition of an industrial customer, such classifications are acceptable in lieu of those otherwise required by the text of this account on the basis of 1000 kilowatts of demand.

NOTE B: When electricity supplied through a single meter is used for both commercial and residential purposes, the total revenue shall be included in this account, or Account 440, Residential Sales, according to the rate schedule that is applied. If the same rate schedules apply to residential and commercial and industrial service, classification shall be made according to principal use.

B. Account 442 shall be subaccounted as follows:

442.1 Commercial and Industrial Sales—1000 kVA or Less
442.2 Commercial and Industrial Sales—Over 1000 kVA

442.1 Commercial and Industrial Sales—1000 kVA or Less

A. This account shall include the net billing for electricity supplied to consumers for commercial and industrial purposes requiring transformer capacity of 1000 kVA or less.

B. Records shall be maintained so that the quantity of electricity sold and the revenue received under each rate schedule shall be readily available.

NOTE: When electricity supplied through a single meter is used for both commercial and residential purposes, the total revenue shall be included in this account or in Account 440, Residential Sales, based upon primary use.

442.2 Commercial and Industrial Sales—Over 1000 kVA

A. This account shall include the net billing for electricity supplied to consumers for commercial and industrial purposes requiring transformer capacity in excess of 1000 kVA.

B. Records shall be maintained so that the quantity of electricity sold and the revenue received under each rate schedule shall be readily available.

444 Public Street and Highway Lighting

A. This account shall include the net billing for electricity supplied and services rendered for the purposes of lighting streets, highways, parks, and other public places or for traffic or signal system service, for municipalities or other divisions or agencies of state of Federal Governments.

B. Records shall be maintained so that the quantity of electricity sold and the revenue received from each customer shall be readily available. In addition, the records shall be maintained so as to show the revenues from (1) contracts which include both electricity and services, and (2) contracts which include sales of electricity only.

445 Other Sales to Public Authorities

A. This account shall include the net billing for electricity supplied to municipalities or divisions or agencies of Federal or state governments, under special contracts or agreements or service classifications applicable only to public authorities, except such revenues as are includible in Account 444 and Account 447.

B. Records shall be maintained so as to show the quantity of electricity sold and the revenues received from each customer.

446 Sales to Railroads and Railways

A. This account shall include the net billing for electricity supplied to railroads and interurban and street railways, for general railroad use, including the propulsion of cars or locomotives, where such electricity is supplied under separate and distinct rate schedules.

B. Records shall be maintained so that the quantity of electricity sold and the revenue received from each customer shall be readily available.

NOTE: Revenues from incidental use of electricity furnished under a contract for propulsion of cars or locomotives shall be included herein.

447 Sales for Resale

A. This account shall include the net billing for electricity supplied to other electric utilities or to public authorities for resale purposes.

NOTE: Revenues from electricity supplied to other utilities for use by them and not for distribution, shall be included in Account 442, Commercial and Industrial Sales, unless supplied under the same contracts as and not readily separable from revenues includible in this account.

B. Account 447 shall be subaccounted as follows:

447.1 Sales for Resale—RUS Borrowers
447.2 Sales for Resale—Other

447.1 Sales for Resale—RUS Borrowers

A. This account shall include the net billing for electricity supplied to RUS borrowers for resale.

B. Records shall be maintained so as to show the quantity of electricity sold and the revenue received from each customer.

NOTE: Revenues from electricity supplied to other utilities for use by them and not for distribution, shall be included in Account 442, Commercial and Industrial Sales, unless supplied under the same contract as and not readily separable from revenues includible in this account.

447.2 Sales for Resale—Other

A. This account shall include the net billing for electricity supplied for resale to utilities not financed by RUS.

B. Records shall be maintained so as to show the quantity of electricity sold and the revenue received from each customer.

NOTE: Revenues from electricity supplied to other utilities for use by them and not for distribution, shall be included in Account 442, Commercial and Industrial Sales, unless supplied under the same contract as and not readily separable from revenues includible in this account.

448 Interdepartmental Sales

A. This account shall include amounts charged by the electric department at tariff or other specified rates for electricity supplied by it to other utility departments.

B. Records shall be maintained so that the quantity of electricity supplied each other department and the charges therefor shall be readily available.

449.1 Provision for Rate Refunds

A. This account shall be charged with provisions for the estimated pretax effects on net income of the portions of amounts being collected subject to refund which are estimated to be required to be refunded. Such provisions shall be credited to Account 229, Accumulated Provision for Rate Refunds.

B. This account shall also be charged with amounts refunded when such amounts had not been previously accrued.

C. Income tax effects relating to the amounts recorded in this account shall be recorded in Account 410.1, Provision for Deferred Income Taxes, Utility Operating Income, or Account 411.1, Provision for Deferred Income Taxes—Credit, Utility Operating Income, as appropriate.

Other Operating Revenues

450 Forfeited Discounts

This account shall include the amount of discounts forfeited or additional charges imposed because of the failure of customers to pay their electric bills on or before a specified date.

451 Miscellaneous Service Revenues

This account shall include revenues for all miscellaneous services and charges billed to customers which are

not specifically provided for in other accounts.

Items

1. Fees for changing, connecting, or disconnecting service.

2. Profit on maintenance of appliances, wiring, piping, or other installations on customers' premises.

3. Net credit or debit (cost less net salvage and less payment from customers) on closing of work orders for plant installed for temporary service of less than one year. (See Account 185, Temporary Facilities.)

4. Recovery of expenses in connection with current diversion cases (billing for the electricity consumed shall be included in the appropriate electric revenue account).

453 Sales of Water and Water Power

A. This account shall include revenues derived from the sale of water for irrigation, domestic, industrial, or other uses or for the development by others of water power or for headwater benefits; also, revenues derived from furnishing water power for mechanical purposes when the investment in the property used in supplying such water or water power is carried as electric plant in service.

B. The records for this account shall be kept in such manner as to permit an analysis of the rates charged and the purposes for which the water was used.

454 Rent from Electric Property

A. This account shall include rents received for the use by others of land, buildings, and other property devoted to electric operations by the utility.

B. When property owned by the utility is operated jointly with others under a definite arrangement for apportioning the actual expenses among the parties to the arrangement, any amount received by the utility for interest or return or in reimbursement of taxes or depreciation on the property shall be credited to this account.

NOTE: Do not include in this account rents from property constituting an operating unit or system. (See Account 412, Revenues from Electric Plant Leased to Others.)

455 Interdepartmental Rents

This account shall include rents credited to the electric department on account of rental charges made against other departments (gas, water, etc.) of the utility. In the case of property operated under a definite arrangement to allocate the costs among the departments using the property, any reimbursement to the electric department for interest or return and depreciation and taxes shall be credited to this account.

456 Other Electric Revenues

This account shall include revenues derived from electric operations not includible in any of the foregoing accounts. It shall also include, in a separate subaccount, revenues received from operation of fish and wildlife and recreation facilities whether operated by the company or by contract concessionaires, such as revenues from leases or rentals of land for cottages, homes, or campsites.

Items

1. Commission on sale or distribution of electricity of others when sold under rates filed by such others.

2. Compensation for minor or incidental services provided for others such as customer billing, and engineering.

3. Profit or loss on the sale of material and supplies not ordinarily purchased for resale and not handled through merchandising and jobbing accounts.

4. Sale of steam, but not including sales made by a steamheating department or transfers of steam under joint facility operations.

5. Revenues from transmission of electricity of others over transmission facilities of the utility.

6. Include in a separate subaccount, revenues in payment for rights and/or benefits received from others which are realized through research, development, and demonstration ventures. In the event the amounts received are so large as to distort revenues for the year in which received (5 percent of net income before application of the benefit), the amounts shall be credited to Account 253, Other Deferred Credits,

and amortized by credits to this account over a period not to exceed 5 years.

§ 1767.27 Operation and maintenance expenses.

The operation and maintenance expense accounts identified in this section shall be used by all RUS borrowers.

OPERATION AND MAINTENANCE EXPENSE ACCOUNTS

POWER PRODUCTION EXPENSES

Steam Power Generation

(Operation)

500 Operation Supervision and Engineering
501 Fuel
502 Steam Expenses
503 Steam from Other Sources
504 Steam Transferred—Credit
505 Electric Expenses
506 Miscellaneous Steam Power Expenses
507 Rents
509 Allowances

(Maintenance)

510 Maintenance Supervision and Engineering
511 Maintenance of Structures
512 Maintenance of Boiler Plant
513 Maintenance of Electric Plant
514 Maintenance of Miscellaneous Steam Plant

Nuclear Power Generation

(Operation)

517 Operation Supervision and Engineering
518 Nuclear Fuel Expense
519 Coolants and Water
520 Steam Expenses
521 Steam from Other Sources
522 Steam Transferred—Credit
523 Electric Expenses
524 Miscellaneous Nuclear Power Expenses
525 Rents

(Maintenance)

528 Maintenance Supervision and Engineering
529 Maintenance of Structures
530 Maintenance of Reactor Plant Equipment
531 Maintenance of Electric Plant
532 Maintenance of Miscellaneous Nuclear Plant

Hydraulic Power Generation

(Operation)

535 Operation Supervision and Engineering
536 Water for Power
537 Hydraulic Expenses
538 Electric Expenses
539 Miscellaneous Hydraulic Power Generation Expenses
540 Rents

(Maintenance)

541 Maintenance Supervision and Engineering
542 Maintenance of Structures
543 Maintenance of Reservoirs, Dams, and Waterways
544 Maintenance of Electric Plant
545 Maintenance of Miscellaneous Hydraulic Plant

Other Power Generation

(Operation)

546 Operation Supervision and Engineering
547 Fuel
548 Generation Expenses
549 Miscellaneous Other Power Generation Expenses
550 Rents

(Maintenance)

551 Maintenance Supervision and Engineering
552 Maintenance of Structures
553 Maintenance of Generating and Electric Equipment
554 Maintenance of Miscellaneous Other Power Generation Plant

OTHER POWER SUPPLY EXPENSES

555 Purchased Power
556 System Control and Load Dispatching
557 Other Expenses

TRANSMISSION EXPENSES

(Operation)

560 Operation Supervision and Engineering
561 Load Dispatching
562 Station Expenses
563 Overhead Line Expenses
564 Underground Line Expenses
565 Transmission of Electricity by Others
566 Miscellaneous Transmission Expenses
567 Rents

(Maintenance)

568 Maintenance Supervision and Engineering
569 Maintenance of Structures
570 Maintenance of Station Equipment
571 Maintenance of Overhead Lines
572 Maintenance of Underground Lines
573 Maintenance of Miscellaneous Transmission Plant

DISTRIBUTION EXPENSES

(Operation)

580 Operation Supervision and Engineering

581 Load Dispatching
582 Station Expenses
583 Overhead Line Expenses
584 Underground Line Expenses
585 Street Lighting and Signal System Expenses
586 Meter Expenses
587 Customer Installations Expenses
588 Miscellaneous Distribution Expenses
589 Rents

(Maintenance)

590 Maintenance Supervision and Engineering
591 Maintenance of Structures
592 Maintenance of Station Equipment
593 Maintenance of Overhead Lines
594 Maintenance of Underground Lines
595 Maintenance of Line Transformers
596 Maintenance of Street Lighting and Signal Systems
597 Maintenance of Meters
598 Maintenance of Miscellaneous Distribution Plant

OPERATION AND MAINTENANCE EXPENSE ACCOUNTS

POWER PRODUCTION EXPENSES

Steam Power Generation

(Operation)

500 Operation Supervision and Engineering

This account shall include the cost of labor, employee pensions and benefits, social security and other payroll taxes, injuries and damages, and expenses incurred in the general supervision and direction of the operation of steam power generating stations. Direct supervision of specific activities, such as fuel handling, boiler-room operations, and generator operations shall be charged to the appropriate account. (See §1767.17(a).)

501 Fuel

A. This account shall include the cost of fuel used in the production of steam for the generation of electricity, including expenses in unloading fuel from the shipping media and handling thereof up to the point where the fuel enters the first boiler plant bunker, hopper, bucket, tank, or holder of the boiler-house structure. Records shall be maintained to show the quantity, B.t.u. content and cost of each type of fuel used.

B. The cost of fuel shall be charged initially to Account 151, Fuel Stock, and cleared to this account on the basis of the fuel used. Fuel handling expenses may be charged to this account as incurred or charged initially to Account 152, Fuel Stock Expenses Undistributed. In the latter event, they shall be cleared to this account on the basis of the fuel used. Respective amounts of fuel stock and fuel stock expenses shall be readily available.

Items

Labor:

1. Supervising, purchasing, and handling of fuel.
2. All routine fuel analyses.
3. Unloading from shipping facility and placing in storage.
4. Moving of fuel in storage and transferring fuel from one station to another.
5. Handling from storage or shipping facility to first bunker, hopper, bucket, tank, or holder of boiler-house structure.
6. Operation of mechanical equipment, such as locomotives, trucks, cars, boats, barges, and cranes.

Taxes:

1. Federal and state unemployment.
2. F.I.C.A.
3. Property.

Employee Pensions and Benefits: The portion of employee pensions and benefits specifically identifiable with employees' labor costs charged herein or, in the absence of specific employee identification, the portion of employee pensions and benefits, allocated on the more equitable basis of either direct labor dollars or direct labor hours, applicable to the labor items detailed above, including:

1. Accruals for or payments to pension funds or to insurance companies for pension purposes.
2. Group and life insurance premiums (credit dividends received).
3. Payments for medical and hospital services and expenses of employees when not the result of occupational injuries.
4. Payments for accident, sickness, hospital, and death benefits or insurance.

5. Payments to employees incapacitated for service or on leave of absence beyond periods normally allowed when not the result of occupational injuries or in excess of statutory awards.

6. Expenses in connection with educational and recreational activities for the benefit of employees.

Insurance:

1. Premiums payable to insurance companies for fire, storm, burglary, boiler explosion, lightning, fidelity, riot, and similar insurance.

2. Amounts credited to Account 228.1, Accumulated Provision for Property Insurance, for similar protection.

3. Special costs incurred in procuring insurance.

4. Insurance inspection service.

5. Insurance counsel, brokerage fees, and expenses.

6. Premiums payable to insurance companies for protection against claims from injuries and damages by employees or others, such as public liability, property damages, casualty, employee liability, etc., and amounts credited to Account 228.2, Accumulated Provision for Injuries and Damage, for similar protection.

7. Losses not covered by insurance or reserve accruals on account of injuries or deaths to employees or others and damages to the property of others.

8. Fees and expenses of claim investigators.

9. Payment of awards to claimants for court costs and attorneys' services.

10. Medical and hospital service and expenses for employees as the result of occupational injuries or resulting from claims of others.

11. Compensation payments under workmen's compensation laws.

12. Compensation paid while incapacitated as the result of occupational injuries. (See Account 924, Note A.)

13. Cost of safety, accident prevention, and similar educational activities.

Materials and Expenses:

1. Operating, maintenance, and depreciation expenses and ad valorem taxes on utility-owned transportation equipment used to transport fuel from the point of acquisition to the unloading point.

2. Lease or rental costs of transportation equipment used to transport fuel from the point of acquisition to the unloading point.

3. Cost of fuel including freight, switching, demurrage, and other transportation charges.

4. Excise taxes, insurance, purchasing commissions, and similar items.

5. Stores expenses to extent applicable to fuel.

6. Transportation and other expenses in moving fuel in storage.

7. Tools, lubricants, and other supplies.

8. Operating supplies for mechanical equipment.

9. Residual disposal expenses less any proceeds from sale of residuals.

NOTE: Abnormal fuel handling expenses occasioned by emergency conditions shall be charged to expense as incurred.

502 Steam Expenses

This account shall include the cost of labor, employee pensions and benefits, social security and other payroll taxes, injuries and damages, property insurance, property taxes, materials used, and expenses incurred in production of steam for electric generation. This includes all expenses of handling and preparing fuel beginning at the point where the fuel enters the first boiler plant bunker, hopper, tank, or holder of the boiler-house structure.

Items

Labor:

1. Supervising steam production.

2. Operating fuel conveying, storage, weighing, and processing equipment within boiler plant.

3. Operating boiler and boiler auxiliary equipment.

4. Operating boiler feed water purification and treatment equipment.

5. Operating ash-collecting and disposal equipment located inside the plant.

6. Operating boiler plant electrical equipment.

7. Keeping boiler plant log and records and preparing reports on boiler plant operations.

8. Testing boiler water.

9. Testing, checking, and adjusting meters, gauges, and other instruments and equipment in boiler plant.

10. Cleaning boiler plant equipment when not incidental to maintenance work.

11. Repacking glands and replacing gauge glasses where the work involved is of a minor nature and is performed by regular operating crews. Where the work is of a major character, such as that performed on high-pressure boilers, the item should be considered as maintenance.

Taxes:

1. Federal and state unemployment.
2. F.I.C.A.
3. Property.

Employee Pensions and Benefits: The portion of employee pensions and benefits specifically identifiable with employees' labor costs charged herein or, in the absence of specific employee identification, the portion of employee pensions and benefits, allocated on the more equitable basis of either direct labor dollars or direct labor hours, applicable to the labor items detailed above, including:

1. Accruals for or payments to pension funds or to insurance companies for pension purposes.

2. Group and life insurance premiums (credit dividends received).

3. Payments for medical and hospital services and expenses of employees when not the result of occupational injuries.

4. Payments for accident, sickness, hospital, and death benefits or insurance.

5. Payments to employees incapacitated for service or on leave of absence beyond periods normally allowed when not the result of occupational injuries or in excess of statutory awards.

6. Expenses in connection with educational and recreational activities for the benefit of employees.

Insurance:

1. Premiums payable to insurance companies for fire, storm, burglary, boiler explosion, lightning, fidelity, riot, and similar insurance.

2. Amounts credited to Account 228.1, Accumulated Provision for Property Insurance, for similar protection.

3. Special costs incurred in procuring insurance.

4. Insurance inspection service.

5. Insurance counsel, brokerage fees, and expenses.

6. Premiums payable to insurance companies for protection against claims from injuries and damages by employees or others, such as public liability, property damages, casualty, employee liability, etc., and amounts credited to Account 228.2, Accumulated Provision for Injuries and Damage, for similar protection.

7. Losses not covered by insurance or reserve accruals on account of injuries or deaths to employees or others and damages to the property of others.

8. Fees and expenses of claim investigators.

9. Payment of awards to claimants for court costs and attorneys' services.

10. Medical and hospital service and expenses for employees as the result of occupational injuries or resulting from claims of others.

11. Compensation payments under workmen's compensation laws.

12. Compensation paid while incapacitated as the result of occupational injuries. (See Account 924, Note A.)

13. Cost of safety, accident prevention, and similar educational activities.

Materials and Expenses:

1. Chemicals and boiler inspection fees.
2. Lubricants.
3. Boiler feed water purchased and pumping supplies.

503 Steam from Other Sources

This account shall include the cost of steam purchased or transferred from another department of the utility or from others under a joint facility operating arrangement for use in prime movers devoted to the production of electricity.

NOTE: The records shall be so kept as to show separately for each company from which stem is purchased, the point of delivery, the quantity, the price, and the total charge. When steam is transferred from another department or from others under a joint operating arrangement, the utility shall be prepared to show full details of the cost of producing such steam, the basis of

the charge to electric generation, and the extent and manner of use by each department or party involved.

504 Steam Transferred—Credit

A. This account shall include credits for expenses of producing steam which are charged to others or to other utility departments under a joint operating arrangement. Include also credits for steam expenses chargeable to other electric accounts outside of the steam generation group. Full details of the basis of determination of the cost of steam transferred shall be maintained.

B. If the charges to others or to other departments of the utility include an amount for depreciation, taxes, and return on the joint steam facilities, such portion of the charge shall be credited, in the case of others, to Account 454, Rent from Electric Property, and in the case of other departments of the utility, to Account 455, Interdepartmental Rents.

505 Electric Expenses

This account shall include the cost of labor, employee pensions and benefits, social security and other payroll taxes, injuries and damages, property insurance, property taxes, and materials used, and expenses incurred in operating prime movers, generators, and their auxiliary apparatus, switch gear, and other electric equipment to the points where electricity leaves for conversion for transmission or distribution.

Items

Labor:

1. Supervising electric production.
2. Operating turbines, engines, generators, and exciters.
3. Operating condensers, circulating water systems, and other auxiliary apparatus.
4. Operating generator cooling system.
5. Operating lubrication and oil control system, including oil purification.
6. Operating switchboards, switch gear and electric control, and protective equipment.
7. Keeping electric plant log and records and preparing reports on electric plant operations.
8. Testing, checking, and adjusting meters, gauges, and other instruments, relays, controls, and other equipment in the electric plant.
9. Cleaning electric plant equipment when not incidental to maintenance work.
10. Repacking glands and replacing gauge glasses.

Taxes:

1. Federal and state unemployment.
2. F.I.C.A.
3. Taxes.

Employee Pensions and Benefits: The portion of employee pensions and benefits specifically identifiable with employees' labor costs charged herein or, in the absence of specific employee identification, the portion of employee pensions and benefits, allocated on the more equitable basis of either direct labor dollars or direct labor hours, applicable to the labor items detailed above, including:

1. Accruals for or payments to pension funds or to insurance companies for pension purposes.
2. Group and life insurance premiums (credit dividends received).
3. Payments for medical and hospital services and expenses of employees when not the result of occupational injuries.
4. Payments for accident, sickness, hospital, and death benefits or insurance.
5. Payments to employees incapacitated for service or on leave of absence beyond periods normally allowed when not the result of occupational injuries or in excess of statutory awards.
6. Expenses in connection with educational and recreational activities for the benefit of employees.

Insurance:

1. Premiums payable to insurance companies for fire, storm, burglary, boiler explosion, lightning, fidelity, riot, and similar insurance.
2. Amounts credited to Account 228.1, Accumulated Provision for Property Insurance, for similar protection.
3. Special costs incurred in procuring insurance.
4. Insurance inspection service.
5. Insurance counsel, brokerage fees, and expenses.

6. Premiums payable to insurance companies for protection against claims from injuries and damages by employees or others, such as public liability, property damages, casualty, employee liability, etc., and amounts credited to Account 228.2, Accumulated Provision for Injuries and Damage, for similar protection.

7. Losses not covered by insurance or reserve accruals on account of injuries or deaths to employees or others and damages to the property of others.

8. Fees and expenses of claim investigators.

9. Payment of awards to claimants for court costs and attorneys' services.

10. Medical and hospital service and expenses for employees as the result of occupational injuries or resulting from claims of others.

11. Compensation payments under workmen's compensation laws.

12. Compensation paid while incapacitated as the result of occupational injuries. (See Account 924, Note A.)

13. Cost of safety, accident prevention, and similar educational activities.

Materials and Expenses:

1. Lubricants and control system oils.
2. Generator cooling gases.
3. Circulating water purification supplies.
4. Cooling water purchased.
5. Motor and generator brushes.

506 Miscellaneous Steam Power Expenses

This account shall include the cost of labor, employee pensions and benefits, social security and other payroll taxes, injuries and damages, and materials used and expenses incurred which are not specifically provided for or not readily assignable to other steam generation operation expense accounts.

Items

Labor:

1. General clerical and stenographic work.
2. Guarding and patrolling plant and yard.
3. Building service.
4. Care of grounds including snow removal, and grass cutting.
5. Miscellaneous labor.

Taxes:

1. Federal and state unemployment.
2. F.I.C.A.

Employee Pensions and Benefits: The portion of employee pensions and benefits specifically identifiable with employees' labor costs charged herein or, in the absence of specific employee identification, the portion of employee pensions and benefits, allocated on the more equitable basis of either direct labor dollars or direct labor hours, applicable to the labor items detailed above, including:

1. Accruals for or payments to pension funds or to insurance companies for pension purposes.
2. Group and life insurance premiums (credit dividends received).
3. Payments for medical and hospital services and expenses of employees when not the result of occupational injuries.
4. Payments for accident, sickness, hospital, and death benefits or insurance.
5. Payments to employees incapacitated for service or on leave of absence beyond periods normally allowed when not the result of occupational injuries or in excess of statutory awards.
6. Expenses in connection with educational and recreational activities for the benefit of employees.

Insurance:

1. Premiums payable to insurance companies for protection against claims from injuries and damages by employees or others, such as public liability, property damages, casualty, employee liability, etc., and amounts credited to Account 228.2, Accumulated Provision for Injuries and Damage, for similar protection.
2. Losses not covered by insurance or reserve accruals on account of injuries or deaths to employees or others and damages to the property of others.
3. Fees and expenses of claim investigators.
4. Payment of awards to claimants for court costs and attorneys' services.
5. Medical and hospital service and expenses for employees as the result of occupational injuries or resulting from claims of others.

6. Compensation payments under workmen's compensation laws.

7. Compensation paid while incapacitated as the result of occupational injuries. (See Account 924, Note A.)

8. Cost of safety, accident prevention, and similar educational activities.

Materials and Expenses:

1. General operating supplies, such as tools, gaskets, packing waste, gauge glasses, hose, indicating lamps, record and report forms.

2. First-aid supplies and safety equipment.

3. Employees' service facilities expenses.

4. Building service supplies.

5. Communication service.

6. Miscellaneous office supplies and expenses, printing, and stationery.

7. Transportation expenses.

8. Meals, traveling, and incidental expenses.

9. Research, development, and demonstration expenses.

507 Rents

This account shall include all rents of property of others used, occupied or operated in connection with steam power generation. (See § 1767.17 (c).)

509 Allowances

This account shall include the cost of allowances expensed concurrent with the monthly emission of sulfur dioxide. (See § 1767.15 (u).)

(Maintenance)

510 Maintenance Supervision and Engineering

This account shall include the cost of labor, employee pensions and benefits, social security and other payroll taxes, injuries and damages, and expenses incurred in the general supervision and direction of maintenance of steam generation facilities. Direct field supervision of specific jobs shall be charged to the appropriate maintenance account. (See § 1767.17(a).)

511 Maintenance of Structures

This account shall include the cost of labor, employee pensions and benefits, social security and other payroll taxes, injuries and damages, and materials used and expenses incurred in the maintenance of steam structures, the book cost of which is includible in Account 311, Structures and Improvements. (See § 1767.17(b).)

512 Maintenance of Boiler Plant

A. This account shall include the cost of labor, employee pensions and benefits, social security and other payroll taxes, injuries and damages, and materials used and expenses incurred in the maintenance of steam plant, the book cost of which is includible in Account 312, Boiler Plant Equipment. (See § 1767.17(b).)

B. For the purpose of making charges hereto and to Account 513, Maintenance of Electric Plant, the point at which steam plant is distinguished from electric plant is defined as follows:

1. Inlet flange of throttle valve on prime mover.

2. Flange of all steam extraction lines on prime mover.

3. Hotwell pump outlet on condensate lines.

4. Inlet flange of all turbine-room auxiliaries.

5. Connection to line side of motor starter for all boiler-plant equipment.

513 Maintenance of Electric Plant

This account shall include the cost of labor, employee pensions and benefits, social security and other payroll taxes, injuries and damages, and materials used and expenses incurred in the maintenance of electric plant, the book cost of which is includible in Account 313, Engines and Engine-Driven Generators; Account 314, Turbogenerator Units; and Account 315, Accessory Electric Equipment. (See § 1767.17(b) and Paragraph B of Account 512.)

514 Maintenance of Miscellaneous Steam Plant

This account shall include the cost of labor, employee pensions and benefits, social security and other payroll taxes, injuries and damages, and materials used and expenses incurred in maintenance of miscellaneous steam generation plant, the book cost of which is includible in Account 316, Miscellaneous

Power Plant Equipment. (See § 1767.17(b).)

Nuclear Power Generation

(Operation)

517 Operation Supervision and Engineering

This account shall include the cost of labor, employee pensions and benefits, social security and other payroll taxes, injuries and damages, and expenses incurred in the general supervision and direction of the operation of nuclear power generating stations. Direct supervision of specific activities, such as fuel handling, reactor operations, and generator operations shall be charged to the appropriate account. (See § 1767.17(a).)

518 Nuclear Fuel Expense

A. This account shall be debited and Account 120.5, Accumulated Provision for Amortization of Nuclear Fuel Assemblies, credited for the amortization of the net cost of nuclear fuel assemblies used in the production of energy. The net cost of nuclear fuel assemblies subject to amortization shall be the cost of nuclear fuel assemblies plus or less the expected net salvage of uranium, plutonium, and other byproducts and unburned fuel. The utility shall adopt the necessary procedures to assure that charges to this account are distributed according to the thermal energy produced in such periods.

B. This account shall also include the costs involved when fuel is leased.

C. This account shall also include the cost of other fuels, used for ancillary steam facilities, including superheat.

D. This account shall be debited or credited as appropriate for significant changes in the amounts estimated as the net salvage value of uranium, plutonium, and other byproducts contained in Account 157, Nuclear Materials Held for Sale, and the amount realized upon the final disposition of the materials. Significant declines in the estimated realizable value of items carried in Account 157 may be recognized at the time of market price declines by charging this account and crediting Account 157. When the declining change occurs while the fuel is recorded in Account 120.3, Nuclear Fuel Assemblies in Reactor, the effect shall be amortized over the remaining life of the fuel.

519 Coolants and Water

This account shall include the cost of labor, employee pensions and benefits, social security and other payroll taxes, injuries and damages, property insurance, property taxes, and materials used and expenses incurred for heat transfer materials and water used for steam and cooling purposes.

Items

Labor:

1. Operation of water supply facilities.
2. Handling of coolants and heat transfer materials.

Taxes:

1. Federal and state unemployment.
2. F.I.C.A.
3. Taxes.

Employee Pensions and Benefits: The portion of employee pensions and benefits specifically identifiable with employees' labor costs charged herein or, in the absence of specific employee identification, the portion of employee pensions and benefits, allocated on the more equitable basis of either direct labor dollars or direct labor hours, applicable to the labor items detailed above, including:

1. Accruals for or payments to pension funds or to insurance companies for pension purposes.
2. Group and life insurance premiums (credit dividends received).
3. Payments for medical and hospital services and expenses of employees when not the result of occupational injuries.
4. Payments for accident, sickness, hospital, and death benefits or insurance.
5. Payments to employees incapacitated for service or on leave of absence beyond periods normally allowed when not the result of occupational injuries or in excess of statutory awards.
6. Expenses in connection with educational and recreational activities for the benefit of employees.

Insurance:

1. Premiums payable to insurance companies for fire, storm, burglary, boiler explosion, lightning, fidelity, riot, and similar insurance.

2. Amounts credited to Account 228.1, Accumulated Provision for Property Insurance, for similar protection.

3. Special costs incurred in procuring insurance.

4. Insurance inspection service.

5. Insurance counsel, brokerage fees, and expenses.

6. Premiums payable to insurance companies for protection against claims from injuries and damages by employees or others, such as public liability, property damages, casualty, employee liability, etc., and amounts credited to Account 228.2, Accumulated Provision for Injuries and Damage, for similar protection.

7. Losses not covered by insurance or reserve accruals on account of injuries or deaths to employees or others and damages to the property of others.

8. Fees and expenses of claim investigators.

9. Payment of awards to claimants for court costs and attorneys' services.

10. Medical and hospital service and expenses for employees as the result of occupational injuries or resulting from claims of others.

11. Compensation payments under workmen's compensation laws.

12. Compensation paid while incapacitated as the result of occupational injuries. (See Account 924, Note A.)

13. Cost of safety, accident prevention, and similar educational activities.

Materials and Expenses:

1. Chemicals.

2. Additions to or refining of fluids used in reactor systems.

3. Lubricants.

4. Pumping supplies and expenses.

5. Miscellaneous supplies and expenses.

6. Purchased water.

NOTE: Do not include in this account water for general station use or the initial charge for coolants, heat transfer, or moderator fluids, chemicals, or other supplies capitalized.

520 Steam Expenses

This account shall include the cost of labor, employee pensions and benefits, social security and other payroll taxes, injuries and damages, property insurance, property taxes, and materials used and expenses incurred in production of steam through nuclear processes, and similar expenses for operation of any auxiliary superheat facilities.

Items

Labor:

1. Supervising steam production.

2. Fuel handling including removal, insertion, disassembly, and preparation for cooling operations and shipment.

3. Testing instruments and gauges.

4. Health, safety, monitoring, and decontamination activities.

5. Waste disposal.

6. Operating steam boilers and auxiliary steam, superheat facilities.

Taxes:

1. Federal and state unemployment.

2. F.I.C.A.

3. Property.

Employee Pensions and Benefits: The portion of employee pensions and benefits specifically identifiable with employees' labor costs charged herein or, in the absence of specific employee identification, the portion of employee pensions and benefits, allocated on the more equitable basis of either direct labor dollars or direct labor hours, applicable to the labor items detailed above, including:

1. Accruals for or payments to pension funds or to insurance companies for pension purposes.

2. Group and life insurance premiums (credit dividends received).

3. Payments for medical and hospital services and expenses of employees when not the result of occupational injuries.

4. Payments for accident, sickness, hospital, and death benefits or insurance.

5. Payments to employees incapacitated for service or on leave of absence beyond periods normally allowed when not the result of occupational injuries or in excess of statutory awards.

6. Expenses in connection with educational and recreational activities for the benefit of employees.

Insurance:

1. Premiums payable to insurance companies for fire, storm, burglary, boiler explosion, lightning, fidelity, riot, and similar insurance.
2. Amounts credited to Account 228.1, Accumulated Provision for Property Insurance, for similar protection.
3. Special costs incurred in procuring insurance.
4. Insurance inspection service.
5. Insurance counsel, brokerage fees, and expenses.
6. Premiums payable to insurance companies for protection against claims from injuries and damages by employees or others, such as public liability, property damages, casualty, employee liability, etc., and amounts credited to Account 228.2, Accumulated Provision for Injuries and Damage, for similar protection.
7. Losses not covered by insurance or reserve accruals on account of injuries or deaths to employees or others and damages to the property of others.
8. Fees and expenses of claim investigators.
9. Payment of awards to claimants for court costs and attorneys' services.
10. Medical and hospital service and expenses for employees as the result of occupational injuries or resulting from claims of others.
11. Compensation payments under workmen's compensation laws.
12. Compensation paid while incapacitated as the result of occupational injuries. (See Account 924, Note A.)
13. Cost of safety, accident prevention, and similar educational activities.

Materials and Expenses:

1. Chemical supplies.
2. Charts and logs.
3. Health, safety, monitoring, and decontamination supplies.
4. Boiler inspection fees.
5. Lubricants.

521 Steam from Other Sources

This account shall include the cost of steam purchased or transferred from another department of the utility or from others under a joint facility operating arrangement for use in prime movers devoted to the production of electricity.

NOTE: The records shall be so kept as to show separately for each company from which steam is purchased, the point of delivery, the quantity, the price, and the total charge. When steam is transferred from another operating department, the utility shall be prepared to show full details of the cost of producing such steam, the basis of the charges to electric generation, and the extent and manner of use by each department involved.

522 Steam Transferred—Credit

A. This account shall include credits for expenses of producing steam which are charged to others or to other utility departments under a joint operating arrangement. Include also credits for steam expenses chargeable to other electric accounts outside of the steam generation group. Full details of the basis of determination of the cost of steam transferred shall be maintained.

B. If the charges to others or to other departments of the utility include an amount for depreciation, taxes, and return on the joint steam facilities, such portion of the charge shall be credited in the case of others, to Account 454, Rent from Electric Property, and in the case of other departments of the utility, to Account 455, Interdepartmental Rents.

523 Electric Expenses

This account shall include the cost of labor, employee pensions and benefits, social security and other payroll taxes, injuries and damages, property insurance, property taxes, materials used, and expenses incurred in operating turbogenerators, steam turbines and their auxiliary apparatus, switch gear, and other electric equipment to the points where electricity leaves for conversion for transmission or distribution.

Items

Labor:

1. Supervising electric production.
2. Operating turbines, engines, generators, and exciters.
3. Operating condensers, circulating water systems, and other auxiliary apparatus.

4. Operating generator cooling system.

5. Operating lubrication and oil control system, including oil purification.

6. Operating switchboards, switch gear, and electric control and protective equipment.

7. Keeping plant log and records and preparing reports on electric plant operations.

8. Testing, checking and adjusting meters, gauges, and other instruments, relays, controls, and other equipment in the electric plant.

9. Cleaning electric plant equipment when not incidental to maintenance.

10. Repacking glands and replacing gauge glasses.

Taxes:

1. Federal and state unemployment.

2. F.I.C.A.

3. Property.

Employee Pensions and Benefits: The portion of employee pensions and benefits specifically identifiable with employees' labor costs charged herein or, in the absence of specific employee identification, the portion of employee pensions and benefits, allocated on the more equitable basis of either direct labor dollars or direct labor hours, applicable to the labor items detailed above, including:

1. Accruals for or payments to pension funds or to insurance companies for pension purposes.

2. Group and life insurance premiums (credit dividends received).

3. Payments for medical and hospital services and expenses of employees when not the result of occupational injuries.

4. Payments for accident, sickness, hospital, and death benefits or insurance.

5. Payments to employees incapacitated for service or on leave of absence beyond periods normally allowed when not the result of occupational injuries or in excess of statutory awards.

6. Expenses in connection with educational and recreational activities for the benefit of employees.

Insurance:

1. Premiums payable to insurance companies for fire, storm, burglary, boiler explosion, lightning, fidelity, riot, and similar insurance.

2. Amounts credited to Account 228.1, Accumulated Provision for Property Insurance, for similar protection.

3. Special costs incurred in procuring insurance.

4. Insurance inspection service.

5. Insurance counsel, brokerage fees, and expenses.

6. Premiums payable to insurance companies for protection against claims from injuries and damages by employees or others, such as public liability, property damages, casualty, employee liability, etc., and amounts credited to Account 228.2, Accumulated Provision for Injuries and Damage, for similar protection.

7. Losses not covered by insurance or reserve accruals on account of injuries or deaths to employees or others and damages to the property of others.

8. Fees and expenses of claim investigators.

9. Payment of awards to claimants for court costs and attorneys' services.

10. Medical and hospital service and expenses for employees as the result of occupational injuries or resulting from claims of others.

11. Compensation payments under workmen's compensation laws.

12. Compensation paid while incapacitated as the result of occupational injuries. (See Account 924, Note A.)

13. Cost of safety, accident prevention, and similar educational activities.

Materials and Expenses:

1. Lubricants and control system oils.

2. Generator cooling gases.

3. Log sheets and charts.

4. Motor and generator brushes.

524 Miscellaneous Nuclear Power Expenses

This account shall include the cost of labor, employee pensions and benefits, social security and other payroll taxes, injuries and damages, materials used, and expenses incurred which are not specifically provided for or are not readily assignable to other nuclear generation operation accounts.

Items

Labor:

1. General clerical and stenographic work.
2. Plant security.
3. Building service.
4. Care of grounds, including snow removal, and grass cutting
5. Miscellaneous labor.

Taxes:

1. Federal and state unemployment.
2. F.I.C.A.

Employee Pensions and Benefits: The portion of employee pensions and benefits specifically identifiable with employees' labor costs charged herein or, in the absence of specific employee identification, the portion of employee pensions and benefits, allocated on the more equitable basis of either direct labor dollars or direct labor hours, applicable to the labor items detailed above, including:

1. Accruals for or payments to pension funds or to insurance companies for pension purposes.
2. Group and life insurance premiums (credit dividends received).
3. Payments for medical and hospital services and expenses of employees when not the result of occupational injuries.
4. Payments for accident, sickness, hospital, and death benefits or insurance.
5. Payments to employees incapacitated for service or on leave of absence beyond periods normally allowed when not the result of occupational injuries or in excess of statutory awards.
6. Expenses in connection with educational and recreational activities for the benefit of employees.

Insurance:

1. Premiums payable to insurance companies for protection against claims from injuries and damages by employees or others, such as public liability, property damages, casualty, employee liability, etc., and amounts credited to Account 228.2, Accumulated Provision for Injuries and Damage, for similar protection.
2. Losses not covered by insurance or reserve accruals on account of injuries or deaths to employees or others and damages to the property of others.
3. Fees and expenses of claim investigators.
4. Payment of awards to claimants for court costs and attorneys' services.
5. Medical and hospital service and expenses for employees as the result of occupational injuries or resulting from claims of others.
6. Compensation payments under workmen's compensation laws.
7. Compensation paid while incapacitated as the result of occupational injuries. (See Account 924, Note A.)
8. Cost of safety, accident prevention, and similar educational activities.

Materials and Expenses:

1. General operating supplies, such as tools, gaskets, hose, indicating lamps, records and reports forms.
2. First-aid supplies and safety equipment.
3. Employees' service facilities expenses.
4. Building service supplies.
5. Communication service.
6. Miscellaneous office supplies and expenses, printing and stationery.
7. Transportation expenses.
8. Meals, traveling, and incidental expenses.
9. Research, development, and demonstration expenses.

525 Rents

This account shall include all rents of property of others used, occupied, or operated in connection with nuclear generation. (See §1767.17 (c).)

(Maintenance)

528 Maintenance Supervision and Engineering

This account shall include the cost of labor, employee pensions and benefits, social security and other payroll taxes, injuries and damages, and expenses incurred in the general supervision and direction of maintenance of nuclear generation facilities. Direct field supervision of specific jobs shall be charged to the appropriate maintenance account. (See §1767.17(a).)

529 Maintenance of Structures

This account shall include the cost of labor, employee pensions and benefits, social security and other payroll taxes, injuries and damages, materials used,

and expenses incurred in the maintenance of structures, the book cost of which is includible in Account 321, Structures and Improvements. (See § 1767.17(b).)

530 Maintenance of Reactor Plant Equipment

This account shall include the cost of labor, employee pensions and benefits, social security and other payroll taxes, injuries and damages, materials used, and expenses incurred in the maintenance of reactor plant, the book cost of which is includible in Account 322, Reactor Plant Equipment. (See § 1767.17(b).)

531 Maintenance of Electric Plant

This account shall include the cost of labor, employee pensions and benefits, social security and other payroll taxes, injuries and damages, materials used, and expenses incurred in the maintenance of electric plant, the book cost of which is includible in Account 323, Turbogenerator Units, and Account 324, Accessory Electric Equipment. (See § 1767.17(b).)

532 Maintenance of Miscellaneous Nuclear Plant

This account shall include the cost of labor, employee pensions and benefits, social security and other payroll taxes, injuries and damages, materials used, and expenses incurred in maintenance of miscellaneous nuclear generating plant, the book cost of which is includible in Account 325, Miscellaneous Power Plant Equipment. (See § 1767.17(b).)

Hydraulic Power Generation

(Operation)

535 Operation Supervision and Engineering

This account shall include the cost of labor, employee pensions and benefits, social security and other payroll taxes, injuries and damages, and expenses incurred in the general supervision and direction of the operation of hydraulic power generating stations. Direct supervision of specific activities, such as hydraulic operation, and generator operation shall be charged to the appropriate account. (See § 1767.17(a).)

536 Water for Power

This account shall include the cost of water used for hydraulic power generation.

Items

1. Cost of water purchased from others, including water tolls paid reservoir companies.
2. Periodic payments for licenses or permits from any governmental agency for water rights, or payments based on the use of the water.
3. Periodic payments for riparian rights.
4. Periodic payments for headwater benefits or for detriments to others.
5. Cloud seeding.

537 Hydraulic Expenses

This account shall include the cost of labor, employee pensions and benefits, social security and other payroll taxes, injuries and damages, property insurance, property taxes, materials used, and expenses incurred in operating hydraulic works including reservoirs, dams, and waterways, and in activities directly relating to the hydroelectric development outside the generating station. It shall also include the cost of labor, materials used, and other expenses incurred in connection with the operation of (1) fish and wildlife, and (2) recreation facilities. Separate subaccounts shall be maintained for each of the above.

Items

Labor:

1. Supervising hydraulic operation.
2. Removing debris and ice from trash racks, reservoirs, and waterways.
3. Patrolling reservoirs and waterways.
4. Operating intakes, spillways, sluiceways, and outlet works.
5. Operating bubbler, heater, or other deicing systems.
6. Ice and log jam work.
7. Operating navigation facilities.
8. Operations relating to conservation of game, fish, and forests.
9. Insect control activities.

Taxes:

1. Federal and state unemployment.
2. F.I.C.A.
3. Property.

Employee Pensions and Benefits: The portion of employee pensions and benefits specifically identifiable with employees' labor costs charged herein or, in the absence of specific employee identification, the portion of employee pensions and benefits, allocated on the more equitable basis of either direct labor dollars or direct labor hours, applicable to the labor items detailed above, including:

1. Accruals for or payments to pension funds or to insurance companies for pension purposes.
2. Group and life insurance premiums (credit dividends received).
3. Payments for medical and hospital services and expenses of employees when not the result of occupational injuries.
4. Payments for accident, sickness, hospital, and death benefits or insurance.
5. Payments to employees incapacitated for service or on leave of absence beyond periods normally allowed when not the result of occupational injuries or in excess of statutory awards.
6. Expenses in connection with educational and recreational activities for the benefit of employees.

Insurance:

1. Premiums payable to insurance companies for fire, storm, burglary, boiler explosion, lightning, fidelity, riot, and similar insurance.
2. Amounts credited to Account 228.1, Accumulated Provision for Property Insurance, for similar protection.
3. Special costs incurred in procuring insurance.
4. Insurance inspection service.
5. Insurance counsel, brokerage fees, and expenses.
6. Premiums payable to insurance companies for protection against claims from injuries and damages by employees or others, such as public liability, property damages, casualty, employee liability, etc., and amounts credited to Account 228.2, Accumulated Provision for Injuries and Damage, for similar protection.
7. Losses not covered by insurance or reserve accruals on account of injuries or deaths to employees or others and damages to the property of others.
8. Fees and expenses of claim investigators.
9. Payment of awards to claimants for court costs and attorneys' services.
10. Medical and hospital service and expenses for employees as the result of occupational injuries or resulting from claims of others.
11. Compensation payments under workmen's compensation laws.
12. Compensation paid while incapacitated as the result of occupational injuries. (See Account 924, Note A.)
13. Cost of safety, accident prevention, and similar educational activities.

Materials and Expenses:

1. Insect control materials.
2. Lubricants, packing, and other supplies used in the operation of hydraulic equipment.
3. Transportation expense.

538 Electric Expenses

This account shall include the cost of labor, employee pensions and benefits, social security and other payroll taxes, injuries and damages, property insurance, property taxes, materials used, and expenses incurred in operating prime movers, generators, and their auxiliary apparatus, switchgear, and other electric equipment, to the point where electricity leaves for conversion for transmission or distribution.

Items

Labor:

1. Supervising electric production.
2. Operating prime movers, generators, and auxiliary equipment.
3. Operating generator cooling system.
4. Operating lubrication and oil control systems, including oil purification.
5. Operating switchboards, switchgear, and electric control and protection equipment.
6. Keeping plant log and records and preparing reports on plant operations.
7. Testing, checking and adjusting meters, gauges, and other instruments, relays, controls, and other equipment in the plant.
8. Cleaning plant equipment when not incidental to maintenance work.

9. Repacking glands.

Taxes:

1. Federal and state unemployment.
2. F.I.C.A.
3. Property.

Employee Pensions and Benefits: The portion of employee pensions and benefits specifically identifiable with employees' labor costs charged herein or, in the absence of specific employee identification, the portion of employee pensions and benefits, allocated on the more equitable basis of either direct labor dollars or direct labor hours, applicable to the labor items detailed above, including:

1. Accruals for or payments to pension funds or to insurance companies for pension purposes.
2. Group and life insurance premiums (credit dividends received).
3. Payments for medical and hospital services and expenses of employees when not the result of occupational injuries.
4. Payments for accident, sickness, hospital, and death benefits or insurance.
5. Payments to employees incapacitated for service or on leave of absence beyond periods normally allowed when not the result of occupational injuries or in excess of statutory awards.
6. Expenses in connection with educational and recreational activities for the benefit of employees.

Insurance:

1. Premiums payable to insurance companies for fire, storm, burglary, boiler explosion, lightning, fidelity, riot, and similar insurance.
2. Amounts credited to Account 228.1, Accumulated Provision for Property Insurance, for similar protection.
3. Special costs incurred in procuring insurance.
4. Insurance inspection service.
5. Insurance counsel, brokerage fees, and expenses.
6. Premiums payable to insurance companies for protection against claims from injuries and damages by employees or others, such as public liability, property damages, casualty, employee liability, etc., and amounts credited to Account 228.2, Accumulated Provision for Injuries and Damage, for similar protection.
7. Losses not covered by insurance or reserve accruals on account of injuries or deaths to employees or others and damages to the property of others.
8. Fees and expenses of claim investigators.
9. Payment of awards to claimants for court costs and attorneys' services.
10. Medical and hospital service and expenses for employees as the result of occupational injuries or resulting from claims of others.
11. Compensation payments under workmen's compensation laws.
12. Compensation paid while incapacitated as the result of occupational injuries. (See Account 924, Note A.)
13. Cost of safety, accident prevention, and similar educational activities.

Materials and Expenses:

1. Lubricants and control system oils.
2. Motor and generator brushes.

539 Miscellaneous Hydraulic Power Generation Expenses

This account shall include the cost of labor, employee pensions and benefits, social security and other payroll taxes, injuries and damages, materials used, and expenses incurred which are not specifically provided for or are not readily assignable to other hydraulic generation operation expense accounts.

Items

Labor:

1. General clerical and stenographic work.
2. Guarding and patrolling plant and yard.
3. Building service.
4. Care of grounds including snow removal, and grass cutting.
5. Snow removal from roads and bridges.
6. Miscellaneous labor.

Taxes:

1. Federal and state unemployment.
2. F.I.C.A.

Employee Pensions and Benefits: The portion of employee pensions and benefits specifically identifiable with employees' labor costs charged herein or, in the absence of specific employee identification, the portion of employee pensions and benefits, allocated on the

more equitable basis of either direct labor dollars or direct labor hours, applicable to the labor items detailed above, including:

1. Accruals for or payments to pension funds or to insurance companies for pension purposes.
2. Group and life insurance premiums (credit dividends received).
3. Payments for medical and hospital services and expenses of employees when not the result of occupational injuries.
4. Payments for accident, sickness, hospital, and death benefits or insurance.
5. Payments to employees incapacitated for service or on leave of absence beyond periods normally allowed when not the result of occupational injuries or in excess of statutory awards.
6. Expenses in connection with educational and recreational activities for the benefit of employees.

Insurance:

1. Premiums payable to insurance companies for protection against claims from injuries and damages by employees or others, such as public liability, property damages, casualty, employee liability, etc., and amounts credited to Account 228.2, Accumulated Provision for Injuries and Damage, for similar protection.
2. Losses not covered by insurance or reserve accruals on account of injuries or deaths to employees or others and damages to the property of others.
3. Fees and expenses of claim investigators.
4. Payment of awards to claimants for court costs and attorneys' services.
5. Medical and hospital service and expenses for employees as the result of occupational injuries or resulting from claims of others.
6. Compensation payments under workmen's compensation laws.
7. Compensation paid while incapacitated as the result of occupational injuries. (See Account 924, Note A.)
8. Cost of safety, accident prevention, and similar educational activities.

Materials and Expenses:

1. General operating supplies, such as tools, gaskets, packing, waste, hose, indicating lamps, record and report forms.
2. First-aid supplies and safety equipment.
3. Employees' service facilities expenses.
4. Building service supplies.
5. Communication service.
6. Office supplies, printing and stationery.
7. Transportation expenses.
8. Fuel.
9. Meals, traveling, and incidental expenses.
10. Research, development, and demonstration expenses.

540 Rents

This account shall include all rents of property of others used, occupied, or operated in connection with hydraulic power generation, including amounts payable to the United States for the occupancy of public lands and reservations for reservoirs, dams, flumes, forebays, penstocks, and power houses but not including transmission right-of-way. (See §1767.17 (c).)

(Maintenance)

541 Maintenance Supervision and Engineering

This account shall include the cost of labor, employee pensions and benefits, social security and other payroll taxes, injuries and damages, and expenses incurred in the general supervision and direction of the maintenance of hydraulic power generating stations. Direct field supervision of specific jobs shall be charged to the appropriate maintenance account. (See §1767.17(a).)

542 Maintenance of Structures

This account shall include the cost of labor, employee pensions and benefits, social security and other payroll taxes, injuries and damages, materials used, and expenses incurred in maintenance of hydraulic structures, the book cost of which is includible in Account 331, Structures and Improvements. (See §1767.17 (b).) However, the cost of labor, materials used, and expenses incurred in the maintenance of fish and wildlife and recreation facilities, the book cost of which is includible in Account 331, Structures and Improvements, shall be

charged to Account 545, Maintenance of Miscellaneous Hydraulic Plant.

543 Maintenance of Reservoirs, Dams, and Waterways

This account shall include the cost of labor, employee pensions and benefits, social security and other payroll taxes, injuries and damages, materials used, and expenses incurred in maintenance of plant includible in Account 332, Reservoirs, Dams, and Waterways. (See § 1767.17(b).) However, the cost of labor, materials used, and expenses incurred in the maintenance of fish and wildlife and recreation facilities, the book cost of which is includible in Account 332, Reservoirs, Dams, and Waterways, shall be charged to Account 545, Maintenance of Miscellaneous Hydraulic Plant.

544 Maintenance of Electric Plant

This account shall include the cost of labor, employee pensions and benefits, social security and other payroll taxes, injuries and damages, materials used, and expenses incurred in maintenance of plant includible in Account 333, Water Wheels, Turbines and Generators, and Account 334, Accessory Electric Equipment, (See § 1767.17(b).)

545 Maintenance of Miscellaneous Hydraulic Plant

This account shall include the cost of labor, employee pensions and benefits, social security and other payroll taxes, injuries and damages, materials used, and expenses incurred in maintenance of plant, the book cost of which is includible in Account 335, Miscellaneous Power Plant Equipment, and Account 336, Roads Railroads and Bridges. (See § 1767.17(b).) It shall also include the cost of labor, materials used, and other expenses incurred in the maintenance of (1) fish and wildlife, and (2) recreation facilities. Separate subaccounts shall be maintained for each of the above.

Other Power Generation

(Operation)

546 Operation Supervision and Engineering

This account shall include the cost of labor, employee pensions and benefits, social security and other payroll taxes, injuries and damages, and expenses incurred in the general supervision and direction of the operation of other power generating stations. Direct supervision of specific activities, such as fuel handling and engine and generator operation shall be charged to the appropriate account. (See § 1767.17(a).)

547 Fuel

This account shall include the cost delivered at the station (See Account 151, Fuel Stock) of all fuel, such as gas, oil, kerosene, and gasoline used in other power generation.

548 Generation Expenses

This account shall include the cost of labor, employee pensions and benefits, social security and other payroll taxes, injuries and damages, property insurance, property taxes, materials used, and expenses incurred in operating prime movers, generators, and electric equipment in other power generating stations, to the point where electricity leaves for conversion for transmission or distribution.

Items

Labor:

1. Supervising other power generation operation.
2. Operating prime movers, generators, and auxiliary apparatus and switching and other electric equipment.
3. Keeping plant log and records and preparing reports on plant operations.
4. Testing, checking, cleaning, oiling, and adjusting equipment.

Taxes:

1. Federal and state unemployment.
2. F.I.C.A.

3. Property.

Employee Pensions and Benefits: The portion of employee pensions and benefits specifically identifiable with employees' labor costs charged herein or, in the absence of specific employee identification, the portion of employee pensions and benefits, allocated on the more equitable basis of either direct labor dollars or direct labor hours, applicable to the labor items detailed above, including:

1. Accruals for or payments to pension funds or to insurance companies for pension purposes.

2. Group and life insurance premiums (credit dividends received).

3. Payments for medical and hospital services and expenses of employees when not the result of occupational injuries.

4. Payments for accident, sickness, hospital, and death benefits or insurance.

5. Payments to employees incapacitated for service or on leave of absence beyond periods normally allowed when not the result of occupational injuries or in excess of statutory awards.

6. Expenses in connection with educational and recreational activities for the benefit of employees.

Insurance:

1. Premiums payable to insurance companies for fire, storm, burglary, boiler explosion, lightning, fidelity, riot, and similar insurance.

2. Amounts credited to Account 228.1, Accumulated Provision for Property Insurance, for similar protection.

3. Special costs incurred in procuring insurance.

4. Insurance inspection service.

5. Insurance counsel, brokerage fees, and expenses.

6. Premiums payable to insurance companies for protection against claims from injuries and damages by employees or others, such as public liability, property damages, casualty, employee liability, etc., and amounts credited to Account 228.2, Accumulated Provision for Injuries and Damage, for similar protection.

7. Losses not covered by insurance or reserve accruals on account of injuries or deaths to employees or others and damages to the property of others.

8. Fees and expenses of claim investigators.

9. Payment of awards to claimants for court costs and attorneys' services.

10. Medical and hospital service and expenses for employees as the result of occupational injuries or resulting from claims of others.

11. Compensation payments under workmen's compensation laws.

12. Compensation paid while incapacitated as the result of occupational injuries. (See Account 924, Note A.)

13. Cost of safety, accident prevention, and similar educational activities.

Materials and Expenses:

1. Dynamo, motor, and generator brushes.

2. Lubricants and control system oils.

3. Water for cooling engines and generators.

549 Miscellaneous Other Power Generation Expenses

This account shall include the cost of labor, employee pensions and benefits, social security and other payroll taxes, injuries and damages, materials used, and expenses incurred in the operation of other power generating stations which are not specifically provided for or are not readily assignable to other generation expense accounts.

Items

Labor:

1. General clerical and stenographic work.

2. Guarding and patrolling plant and yard.

3. Building service.

4. Care of grounds, including snow removal, and grass cutting.

5. Miscellaneous labor.

Taxes:

1. Federal and state unemployment.

2. F.I.C.A.

Employee Pensions and Benefits: The portion of employee pensions and benefits specifically identifiable with employees' labor costs charged herein or, in the absence of specific employee identification, the portion of employee pensions and benefits, allocated on the more equitable basis of either direct

labor dollars or direct labor hours, applicable to the labor items detailed above, including:

1. Accruals for or payments to pension funds or to insurance companies for pension purposes.
2. Group and life insurance premiums (credit dividends received).
3. Payments for medical and hospital services and expenses of employees when not the result of occupational injuries.
4. Payments for accident, sickness, hospital, and death benefits or insurance.
5. Payments to employees incapacitated for service or on leave of absence beyond periods normally allowed when not the result of occupational injuries or in excess of statutory awards.
6. Expenses in connection with educational and recreational activities for the benefit of employees.

Insurance:

1. Premiums payable to insurance companies for protection against claims from injuries and damages by employees or others, such as public liability, property damages, casualty, employee liability, etc., and amounts credited to Account 228.2, Accumulated Provision for Injuries and Damage, for similar protection.
2. Losses not covered by insurance or reserve accruals on account of injuries or deaths to employees or others and damages to the property of others.
3. Fees and expenses of claim investigators.
4. Payment of awards to claimants for court costs and attorneys' services.
5. Medical and hospital service and expenses for employees as the result of occupational injuries or resulting from claims of others.
6. Compensation payments under workmen's compensation laws.
7. Compensation paid while incapacitated as the result of occupational injuries. (See Account 924, Note A.)
8. Cost of safety, accident prevention, and similar educational activities.

Materials and Expenses:

1. Building service supplies.
2. First-aid supplies and safety equipment.
3. Communication service.
4. Employees' service facilities expenses.
5. Office supplies, printing and stationery.
6. Transportation expense.
7. Meals, traveling, and incidental expenses.
8. Fuel for heating.
9. Water for fire protection or general use.
10. Miscellaneous supplies, such as hand tools, drills, saw blades, and files.
11. Research, development, and demonstration expenses.

550 Rents

This account shall include all rents of property of others used, occupied, or operated in connection with other power generation. (See § 1767.17 (c).)

(Maintenance)

551 Maintenance Supervision and Engineering

This account shall include the cost of labor, employee pensions and benefits, social security and other payroll taxes, injuries and damages, and expenses incurred in the general supervision and direction of the maintenance of other power generating stations. Direct field supervision of specific jobs shall be charged to the appropriate maintenance account. (See § 1767.17(a).)

552 Maintenance of Structures

This account shall include the cost of labor, employee pensions and benefits, social security and other payroll taxes, injuries and damages, materials used, and expenses incurred in maintenance of facilities used and expenses incurred in maintenance of facilities used in other power generation, the book cost of which is includible in Account 341, Structures and Improvements, and Account 342, Fuel Holders, Producers and Accessories. (See § 1767.17(b).)

553 Maintenance of Generating and Electric Equipment

This account shall include the cost of labor, employee pensions and benefits, social security and other payroll taxes, injuries and damages, materials used, and expenses incurred in maintenance

of plant, the book cost of which is includible in Account 343, Prime Movers; Account 344, Generators; and Account 345, Accessory Electric Equipment. (See §1767.17(b).)

554 Maintenance of Miscellaneous Other Power Generation Plant

This account shall include the cost of labor, employee pensions and benefits, social security and other payroll taxes, injuries and damages, materials used, and expenses incurred in maintenance of other power generation plant, the book cost of which is includible in Account 346, Miscellaneous Power Plant Equipment. (See §1767.17(b).)

OTHER POWER SUPPLY EXPENSES

555 Purchased Power

A. This account shall include the cost at point of receipt by the utility of electricity purchased for resale. It shall also include, net settlements for exchange of electricity or power, such as economy energy, off-peak energy for on-peak energy, and spinning reserve capacity. In addition, the account shall include the net settlements for transactions under pooling or interconnection agreements wherein there is a balancing of debits and credits for energy, or capacity. Distinct purchases and sales shall not be recorded as exchanges and net amounts only recorded merely because debit and credit amounts are combined in the voucher settlement.

B. The records supporting this account shall show, by months, the demands and demand charges, kilowatt-hours and prices thereof under each purchase contract and the charges and credits under each exchange or power pooling contract.

556 System Control and Load Dispatching

This account shall include the cost of labor, employee pensions and benefits, social security and other payroll taxes, injuries and damages, property insurance, property taxes, and expenses incurred in load dispatching activities for system control. Utilities having an interconnected electric system or operating under a central authority which controls the production and dispatching of electricity may apportion these costs to this account and Account 561, Load Dispatching, and Account 581, Load Dispatching.

Items

Labor:

1. Allocating loads to plants and interconnections with others.
2. Directing switching.
3. Arranging and controlling clearances for construction, maintenance, test, and emergency purposes.
4. Controlling system voltages.
5. Recording loadings, and water conditions.
6. Preparing operating reports and data for billing and budget purposes.
7. Obtaining reports on the weather and special events.

Taxes:

1. Federal and state unemployment.
2. F.I.C.A.
3. Property.

Employee Pensions and Benefits: The portion of employee pensions and benefits specifically identifiable with employees' labor costs charged herein or, in the absence of specific employee identification, the portion of employee pensions and benefits, allocated on the more equitable basis of either direct labor dollars or direct labor hours, applicable to the labor items detailed above, including:

1. Accruals for or payments to pension funds or to insurance companies for pension purposes.
2. Group and life insurance premiums (credit dividends received).
3. Payments for medical and hospital services and expenses of employees when not the result of occupational injuries.
4. Payments for accident, sickness, hospital, and death benefits or insurance.
5. Payments to employees incapacitated for service or on leave of absence beyond periods normally allowed when not the result of occupational injuries or in excess of statutory awards.
6. Expenses in connection with educational and recreational activities for the benefit of employees.

Insurance:

1. Premiums payable to insurance companies for fire, storm, burglary, boiler explosion, lightning, fidelity, riot, and similar insurance.

2. Amounts credited to Account 228.1, Accumulated Provision for Property Insurance, for similar protection.

3. Special costs incurred in procuring insurance.

4. Insurance inspection service.

5. Insurance counsel, brokerage fees, and expenses.

6. Premiums payable to insurance companies for protection against claims from injuries and damages by employees or others, such as public liability, property damages, casualty, employee liability, etc., and amounts credited to Account 228.2, Accumulated Provision for Injuries and Damage, for similar protection.

7. Losses not covered by insurance or reserve accruals on account of injuries or deaths to employees or others and damages to the property of others.

8. Fees and expenses of claim investigators.

9. Payment of awards to claimants for court costs and attorneys' services.

10. Medical and hospital service and expenses for employees as the result of occupational injuries or resulting from claims of others.

11. Compensation payments under workmen's compensation laws.

12. Compensation paid while incapacitated as the result of occupational injuries. (See Account 924, Note A.)

13. Cost of safety, accident prevention, and similar educational activities.

Expenses:

1. Communication service provided for system control purposes.

2. System record and report forms.

3. Meals, traveling, and incidental expenses.

4. Obtaining weather and special events reports.

557 Other Expenses

A. This account shall be charged with any production expenses including expenses incurred directly in connection with the purchase of electricity, which are not specifically provided for in other production expense accounts. Charges to this account shall be supported so that a description of each type of charge will be readily available.

B. Recoveries from insurance companies, under use and occupancy provisions of policies, of amounts in reimbursement of excessive or added productions costs for which the insurance company is liable under the terms of the policy shall be credited to this account.

TRANSMISSION EXPENSES

(Operation)

560 Operation Supervision and Engineering

This account shall include the cost of labor, employee pensions and benefits, social security and other payroll taxes, injuries and damages, and expenses incurred in the general supervision and direction of the operation of the transmission system as a whole. Direct supervision of specific activities, such as station operation and line operation shall be charged to the appropriate account. (See § 1767.17(a).)

561 Load Dispatching

This account shall include the cost of labor, employee pensions and benefits, social security and other payroll taxes, injuries and damages, property insurance, property taxes, materials used, and expenses incurred in load dispatching operations pertaining to the transmission of electricity.

Items

Labor:

1. Direct switching.

2. Arranging and controlling clearances for construction, maintenance, test, and emergency purposes.

3. Controlling system voltages.

4. Obtaining reports on the weather and special events.

5. Preparing operating reports and data for billing and budget purposes.

Taxes:

1. Federal and state unemployment.

2. F.I.C.A.

3. Property.

Employee Pensions and Benefits: The portion of employee pensions and benefits specifically identifiable with employees' labor costs charged herein or,

in the absence of specific employee identification, the portion of employee pensions and benefits, allocated on the more equitable basis of either direct labor dollars or direct labor hours, applicable to the labor items detailed above, including:

1. Accruals for or payments to pension funds or to insurance companies for pension purposes.
2. Group and life insurance premiums (credit dividends received).
3. Payments for medical and hospital services and expenses of employees when not the result of occupational injuries.
4. Payments for accident, sickness, hospital, and death benefits or insurance.
5. Payments to employees incapacitated for service or on leave of absence beyond periods normally allowed when not the result of occupational injuries or in excess of statutory awards.
6. Expenses in connection with educational and recreational activities for the benefit of employees.

Insurance:

1. Premiums payable to insurance companies for fire, storm, burglary, boiler explosion, lightning, fidelity, riot, and similar insurance.
2. Amounts credited to Account 228.1, Accumulated Provision for Property Insurance, for similar protection.
3. Special costs incurred in procuring insurance.
4. Insurance inspection service.
5. Insurance counsel, brokerage fees, and expenses.
6. Premiums payable to insurance companies for protection against claims from injuries and damages by employees or others, such as public liability, property damages, casualty, employee liability, etc., and amounts credited to Account 228.2, Accumulated Provision for Injuries and Damage, for similar protection.
7. Losses not covered by insurance or reserve accruals on account of injuries or deaths to employees or others and damages to the property of others.
8. Fees and expenses of claim investigators.
9. Payment of awards to claimants for court costs and attorneys' services.
10. Medical and hospital service and expenses for employees as the result of occupational injuries or resulting from claims of others.
11. Compensation payments under workmen's compensation laws.
12. Compensation paid while incapacitated as the result of occupational injuries. (See Account 924, Note A.)
13. Cost of safety, accident prevention, and similar educational activities.

Expenses:

1. Communication service provided for system control purposes.
2. System record and report forms.
3. Meals, traveling, and incidental expenses.
4. Obtaining weather and special events reports.

562 Station Expenses

This account shall include the cost of labor, employee pensions and benefits, social security and other payroll taxes, injuries and damages, property insurance, property taxes, materials used, and expenses incurred in operating transmission substations and switching stations. If transmission station equipment is located in or adjacent to a generating station, the expenses applicable to transmission station operations shall nevertheless be charged to this account.

Items

Labor:

1. Supervising station operation.
2. Adjusting station equipment where such adjustment primarily affects performance, such as regulating the flow of cooling water, adjusting current in fields of a machine or changing voltage of regulators, changing station transformer taps.
3. Inspecting, testing, and calibrating station equipment for the purpose of checking its performance.
4. Keeping station log and records and preparing records on station operation.
5. Operating switching and other station equipment.
6. Standing watch, guarding, and patrolling station and station yard.
7. Sweeping, mopping, and tidying station.
8. Care of grounds, including snow removal, and grass cutting.

Taxes:

1. Federal and state unemployment.
2. F.I.C.A.
3. Property.

Employee Pensions and Benefits: The portion of employee pensions and benefits specifically identifiable with employees' labor costs charged herein or, in the absence of specific employee identification, the portion of employee pensions and benefits, allocated on the more equitable basis of either direct labor dollars or direct labor hours, applicable to the labor items detailed above, including:

1. Accruals for or payments to pension funds or to insurance companies for pension purposes.
2. Group and life insurance premiums (credit dividends received).
3. Payments for medical and hospital services and expenses of employees when not the result of occupational injuries.
4. Payments for accident, sickness, hospital, and death benefits or insurance.
5. Payments to employees incapacitated for service or on leave of absence beyond periods normally allowed when not the result of occupational injuries or in excess of statutory awards.
6. Expenses in connection with educational and recreational activities for the benefit of employees.

Insurance:

1. Premiums payable to insurance companies for fire, storm, burglary, boiler explosion, lightning, fidelity, riot, and similar insurance.
2. Amounts credited to Account 228.1, Accumulated Provision for Property Insurance, for similar protection.
3. Special costs incurred in procuring insurance.
4. Insurance inspection service.
5. Insurance counsel, brokerage fees, and expenses.
6. Premiums payable to insurance companies for protection against claims from injuries and damages by employees or others, such as public liability, property damages, casualty, employee liability, etc., and amounts credited to Account 228.2, Accumulated Provision for Injuries and Damage, for similar protection.
7. Losses not covered by insurance or reserve accruals on account of injuries or deaths to employees or others and damages to the property of others.
8. Fees and expenses of claim investigators.
9. Payment of awards to claimants for court costs and attorneys' services.
10. Medical and hospital service and expenses for employees as the result of occupational injuries or resulting from claims of others.
11. Compensation payments under workmen's compensation laws.
12. Compensation paid while incapacitated as the result of occupational injuries. (See Account 924, Note A.)
13. Cost of safety, accident prevention, and similar educational activities.

Materials and Expenses:

1. Building service expenses.
2. Operating supplies, such as lubricants, commutator brushes, water, and rubber goods.
3. Station meter and instrument supplies, such as ink and charts.
4. Station record and report forms.
5. Tool expense.
6. Transportation expenses.
7. Meals, traveling, and incidental expenses.

563 Overhead Line Expenses

564 Underground Line Expenses

A. These accounts shall include the cost of labor, employee pensions and benefits, social security and other payroll taxes, injuries and damages, property insurance, property taxes, materials used, and expenses incurred in the operation of transmission lines.

B. If the expenses are not substantial for both overhead and underground lines, these accounts may be combined.

Items

Labor:

1. Supervising line operation.
2. Inspecting and testing lightning arresters, circuit breakers, switches, and grounds.
3. Load tests of circuits.
4. Routine line patrolling.
5. Routine voltage surveys made to determine the condition or efficiency of transmission system.
6. Transferring loads, switching and reconnecting circuits and equipment

for operating purposes. (Switching for construction or maintenance purposes is not includible in this account.)

7. Routine inspection and cleaning of manholes, conduit, network, and transformer vaults.

8. Electrolysis surveys.

9. Inspecting and adjusting line-testing equipment, such as voltmeters, ammeters, and wattmeters.

10. Regulation and addition of oil or gas in high-voltage cable systems.

Taxes:

1. Federal and state unemployment.

2. F.I.C.A.

3. Property.

Employee Pensions and Benefits: The portion of employee pensions and benefits specifically identifiable with employees' labor costs charged herein or, in the absence of specific employee identification, the portion of employee pensions and benefits, allocated on the more equitable basis of either direct labor dollars or direct labor hours, applicable to the labor items detailed above, including:

1. Accruals for or payments to pension funds or to insurance companies for pension purposes.

2. Group and life insurance premiums (credit dividends received).

3. Payments for medical and hospital services and expenses of employees when not the result of occupational injuries.

4. Payments for accident, sickness, hospital, and death benefits or insurance.

5. Payments to employees incapacitated for service or on leave of absence beyond periods normally allowed when not the result of occupational injuries or in excess of statutory awards.

6. Expenses in connection with educational and recreational activities for the benefit of employees.

Insurance:

1. Premiums payable to insurance companies for fire, storm, burglary, boiler explosion, lightning, fidelity, riot, and similar insurance.

2. Amounts credited to Account 228.1, Accumulated Provision for Property Insurance, for similar protection.

3. Special costs incurred in procuring insurance.

4. Insurance inspection service.

5. Insurance counsel, brokerage fees, and expenses.

6. Premiums payable to insurance companies for protection against claims from injuries and damages by employees or others, such as public liability, property damages, casualty, employee liability, etc., and amounts credited to Account 228.2, Accumulated Provision for Injuries and Damage, for similar protection.

7. Losses not covered by insurance or reserve accruals on account of injuries or deaths to employees or others and damages to the property of others.

8. Fees and expenses of claim investigators.

9. Payment of awards to claimants for court costs and attorneys' services.

10. Medical and hospital service and expenses for employees as the result of occupational injuries or resulting from claims of others.

11. Compensation payments under workmen's compensation laws.

12. Compensation paid while incapacitated as the result of occupational injuries. (See Account 924, Note A.)

13. Cost of safety, accident prevention, and similar educational activities.

Materials and Expenses:

1. Transportation expenses.

2. Meals, traveling, and incidental expenses.

3. Tool expenses.

4. Operating supplies, such as instrument charts, and rubber goods.

565 Transmission of Electricity by Others

This account shall include amounts payable to others for the transmission of the utility's electricity over transmission facilities owned by others.

566 Miscellaneous Transmission Expenses

This account shall include the cost of labor, employee pensions and benefits, social security and other payroll taxes, injuries and damage, materials used, and expenses incurred in transmission map and record work, transmission office expenses, and other transmission expenses not provided for elsewhere.

Items

Labor:

1. General records of physical characteristics of lines and stations, such as capacities.
2. Ground resistance records.
3. Janitor work at transmission office buildings, including care of grounds, snow removal, and grass cutting.
4. Joint pole maps and records.
5. Line load and voltage records.
6. Preparing maps and prints.
7. General clerical and stenographic work.
8. Miscellaneous labor.

Taxes:

1. Federal and state unemployment.
2. F.I.C.A.

Employee Pensions and Benefits: The portion of employee pensions and benefits specifically identifiable with employees' labor costs charged herein or, in the absence of specific employee identification, the portion of employee pensions and benefits, allocated on the more equitable basis of either direct labor dollars or direct labor hours, applicable to the labor items detailed above, including:

1. Accruals for or payments to pension funds or to insurance companies for pension purposes.
2. Group and life insurance premiums (credit dividends received).
3. Payments for medical and hospital services and expenses of employees when not the result of occupational injuries.
4. Payments for accident, sickness, hospital, and death benefits or insurance.
5. Payments to employees incapacitated for service or on leave of absence beyond periods normally allowed when not the result of occupational injuries or in excess of statutory awards.
6. Expenses in connection with educational and recreational activities for the benefit of employees.

Insurance:

1. Premiums payable to insurance companies for protection against claims from injuries and damages by employees or others, such as public liability, property damages, casualty, employee liability, etc., and amounts credited to Account 228.2, Accumulated Provision for Injuries and Damage, for similar protection.
2. Losses not covered by insurance or reserve accruals on account of injuries or deaths to employees or others and damages to the property of others.
3. Fees and expenses of claim investigators.
4. Payment of awards to claimants for court costs and attorneys' services.
5. Medical and hospital service and expenses for employees as the result of occupational injuries or resulting from claims of others.
6. Compensation payments under workmen's compensation laws.
7. Compensation paid while incapacitated as the result of occupational injuries. (See Account 924, Note A.)
8. Cost of safety, accident prevention, and similar educational activities.

Materials and Expenses:

1. Communication service.
2. Building service supplies.
3. Map and record supplies.
4. Transmission office supplies and expenses, printing and stationery.
5. First-aid supplies.
6. Research, development, and demonstration expenses.

567 Rents

This account shall include rents of property of others used, occupied, or operated in connection with the transmission system, including payments to the United States and others for use of public or private lands and reservations for transmission line rights-of-way. (See § 1767.17 (c).)

(Maintenance)

568 Maintenance Supervision and Engineering

This account shall include the cost of labor, employee pensions and benefits, social security and other payroll taxes, injuries and damages, and expenses incurred in the general supervision and direction of maintenance of the transmission system. Direct field supervision of specific jobs shall be charged to the appropriate maintenance account. (See § 1767.17(a).)

569 Maintenance of Structures

This account shall include the cost of labor, employee pensions and benefits, social security and other payroll taxes, injuries and damages, materials used, and expenses incurred in the maintenance of structures, the book cost of which is includible in Account 352, Structures and Improvements. (See § 1767.17(b).)

570 Maintenance of Station Equipment

This account shall include the cost of labor, employee pensions and benefits, social security and other payroll taxes, injuries and damages, materials used, and expenses incurred in maintenance of station equipment, the book cost of which is includible in Account 353, Station Equipment. (See § 1767.17(b).)

571 Maintenance of Overhead Lines

This account shall include the cost of labor, employee pensions and benefits, social security and other payroll taxes, injuries and damages, materials used, and expenses incurred in maintenance of transmission plant, the book cost of which is includible in Accounts 354, Towers and Fixtures; 355, Poles and Fixtures; 356, Overhead Conductors and Devices; and 359, Roads and Trails. (See § 1767.17(b).)

Items

1. Work of the following character on poles, towers, and fixtures:

a. Installing or removing additional clamps or strain insulators on guys in place.

b. Moving line or guy pole in relocation of the same pole or section of line.

c. Painting poles, towers, crossarms, or pole extensions.

d. Readjusting and changing position of guys or braces.

e. Realigning and straightening poles, crossarms braces, and other pole fixtures.

f. Reconditioning reclaimed pole fixtures.

g. Relocating crossarms, racks, brackets, and other fixtures on poles.

h. Repairing or realigning pins, racks, or brackets.

i. Repairing pole supported platform.

j. Repairs by others to jointly owned poles.

k. Shaving, cutting rot, or testing poles or crossarms in use or salvaged for reuse.

l. Stubbing poles already in service.

m. Supporting fixtures and conductors and transferring them to new poles during pole replacements.

n. Maintenance of pole signs, stencils, and tags.

2. Work of the following character on overhead conductors and devices:

a. Overhauling and repairing line cutouts, line switches, and line breakers.

b. Cleaning insulators and bushings.

c. Refusing cutouts.

d. Repairing line oil circuit breakers and associated relays and control wiring.

e. Repairing grounds.

f. Resagging, retyping, or rearranging position or spacing of conductors.

g. Standing by phones, going to calls, cutting faulty lines clear, or similar activities at times of emergencies.

h. Sampling, testing, changing, purifying, and replenishing insulating oil.

i. Repairing line testing equipment.

j. Transferring loads, switching and reconnecting circuits and equipment for maintenance purposes.

k. Trimming trees and clearing brush.

l. Chemical treatment of right of way areas when occurring subsequent to construction of line.

3. Work of the following character on roads and trails:

a. Repairing roadways and bridges.

b. Trimming trees and brush to maintain previous roadway clearance.

c. Snow removal from roads and trails.

d. Maintenance work on publicly owned roads and trails when done by utility at its expense.

Taxes:

1. Federal and state unemployment.

2. F.I.C.A.

Employee Pensions and Benefits: The portion of employee pensions and benefits specifically identifiable with employees' labor costs charged herein or, in the absence of specific employee identification, the portion of employee pensions and benefits, allocated on the more equitable basis of either direct

labor dollars or direct labor hours, applicable to the labor items detailed above, including:

1. Accruals for or payments to pension funds or to insurance companies for pension purposes.

2. Group and life insurance premiums (credit dividends received).

3. Payments for medical and hospital services and expenses of employees when not the result of occupational injuries.

4. Payments for accident, sickness, hospital, and death benefits or insurance.

5. Payments to employees incapacitated for service or on leave of absence beyond periods normally allowed when not the result of occupational injuries or in excess of statutory awards.

6. Expenses in connection with educational and recreational activities for the benefit of employees.

Insurance:

1. Premiums payable to insurance companies for protection against claims from injuries and damages by employees or others, such as public liability, property damages, casualty, employee liability, etc., and amounts credited to Account 228.2, Accumulated Provision for Injuries and Damage, for similar protection.

2. Losses not covered by insurance or reserve accruals on account of injuries or deaths to employees or others and damages to the property of others.

3. Fees and expenses of claim investigators.

4. Payment of awards to claimants for court costs and attorneys' services.

5. Medical and hospital services and expenses for employees as the result of occupational injuries or resulting from claims of others.

6. Compensation payments under workmen's compensation laws.

7. Compensation paid while incapacitated as the result of occupational injuries. (See Account 924, Note A.)

8. Cost of safety, accident prevention, and similar educational activities.

572 Maintenance of Underground Lines

This account shall include the cost of labor, employee pensions and benefits, social security and other payroll taxes, injuries and damages, materials used, and expenses incurred in maintenance of transmission plant, the book cost of which is includible in Accounts 357, Underground Conduit, and Account 358, Underground Conductors and Devices. (See § 1767.17(b).)

Items

1. Work of the following character on underground conduit:

a. Cleaning ducts, manholes, and sewer connections.

b. Minor alterations of handholes, manholes, or vaults.

c. Refastening, repairing, or moving racks, ladders, hangers in manholes, or vaults.

d. Plugging and shelving or replugging ducts.

e. Repairs to sewers and drains, walls and floors, rings and covers.

2. Work of the following character on underground conductors and devices:

a. Repairing oil circuit breakers, switches, cutouts, and control wiring.

b. Repairing grounds.

c. Retraining and reconnecting cables in manholes, including transfer of cables from one duct to another.

d. Repairing conductors and splices.

e. Repairing or moving junction boxes and potheads.

f. Refireproofing of cables and repairing supports.

g. Repairing electrolysis preventive devices for cables.

h. Repairing cable bonding systems.

i. Sampling, testing, changing, purifying, and replenishing insulating oil.

j. Transferring loads, switching and reconnecting circuits, and equipment for maintenance purposes.

k. Repairing line testing equipment.

l. Repairs to oil or gas equipment in high-voltage cable system and replacement of oil or gas.

Taxes:

1. Federal and state unemployment.

2. F.I.C.A.

Employee Pensions and Benefits: The portion of employee pensions and benefits specifically identifiable with employees' labor costs charged herein or, in the absence of specific employee identification, the portion of employee pensions and benefits, allocated on the more equitable basis of either direct

labor dollars or direct labor hours, applicable to the labor items detailed above, including:

1. Accruals for or payments to pension funds or to insurance companies for pension purposes.
2. Group and life insurance premiums (credit dividends received).
3. Payments for medical and hospital services and expenses of employees when not the result of occupational injuries.
4. Payments for accident, sickness, hospital, and death benefits or insurance.
5. Payments to employees incapacitated for service or on leave of absence beyond periods normally allowed when not the result of occupational injuries or in excess of statutory awards.
6. Expenses in connection with educational and recreational activities for the benefit of employees.

Insurance:

1. Premiums payable to insurance companies for protection against claims from injuries and damages by employees or others, such as public liability, property damages, casualty, employee liability, etc., and amounts credited to Account 228.2, Accumulated Provision for Injuries and Damage, for similar protection.
2. Losses not covered by insurance or reserve accruals on account of injuries or deaths to employees or others and damages to the property of others.
3. Fees and expenses of claim investigators.
4. Payment of awards to claimants for court costs and attorneys' services.
5. Medical and hospital service and expenses for employees as the result of occupational injuries or resulting from claims of others.
6. Compensation payments under workmen's compensation laws.
7. Compensation paid while incapacitated as the result of occupational injuries. (See Account 924, Note A.)
8. Cost of safety, accident prevention, and similar educational activities.

573 Maintenance of Miscellaneous Transmission Plant

This account shall include the cost of labor, employee pensions and benefits, social security and other payroll taxes, injuries and damages, materials used, and expenses incurred in maintenance of owned or leased plant which is assignable to transmission operations and is not provided for elsewhere. (See §1767.17(b).)

DISTRIBUTION EXPENSES

(Operation)

580 Operation Supervision and Engineering

This account shall include the cost of labor, employee pensions and benefits, social security and other payroll taxes, injuries and damages, and expenses incurred in the general supervision and direction of the operation of the distribution system. Direct supervision of specific activities, such as station operation, line operation, and meter department operation shall be charged to the appropriate account. (See §1767.17(a).)

581 Load Dispatching

This account (the keeping of which is optional with the utility) shall include the cost of labor, employee pensions and benefits, social security and other payroll taxes, injuries and damages, property insurance, property taxes, materials used, and expenses incurred in load dispatching operations pertaining to the distribution of electricity.

Items

Labor:

1. Direct switching.
2. Arranging and controlling clearances for construction, maintenance, test, and emergency purposes.
3. Controlling system voltages.
4. Preparing operating reports.
5. Obtaining reports on the weather and special events.

Taxes:

1. Federal and state unemployment.
2. F.I.C.A.
3. Property.

Employee Pensions and Benefits: The portion of employee pensions and benefits specifically identifiable with employees' labor costs charged herein or, in the absence of specific employee identification, the portion of employee pensions and benefits, allocated on the more equitable basis of either direct

labor dollars or direct labor hours, applicable to the labor items detailed above, including:

1. Accruals for or payments to pension funds or to insurance companies for pension purposes.
2. Group and life insurance premiums (credit dividends received).
3. Payments for medical and hospital services and expenses of employees when not the result of occupational injuries.
4. Payments for accident, sickness, hospital, and death benefits or insurance.
5. Payments to employees incapacitated for service or on leave of absence beyond periods normally allowed when not the result of occupational injuries or in excess of statutory awards.
6. Expenses in connection with educational and recreational activities for the benefit of employees.

Insurance:

1. Premiums payable to insurance companies for fire, storm, burglary, boiler explosion, lightning, fidelity, riot, and similar insurance.
2. Amounts credited to Account 228.1, Accumulated Provision for Property Insurance, for similar protection.
3. Special costs incurred in procuring insurance.
4. Insurance inspection service.
5. Insurance counsel, brokerage fees, and expenses.
6. Premiums payable to insurance companies for protection against claims from injuries and damages by employees or others, such as public liability, property damages, casualty, employee liability, etc., and amounts credited to Account 228.2, Accumulated Provision for Injuries and Damage, for similar protection.
7. Losses not covered by insurance or reserve accruals on account of injuries or deaths to employees or others and damages to the property of others.
8. Fees and expenses of claim investigators.
9. Payment of awards to claimants for court costs and attorneys' services.
10. Medical and hospital service and expenses for employees as the result of occupational injuries or resulting from claims of others.
11. Compensation payments under workmen's compensation laws.
12. Compensation paid while incapacitated as the result of occupational injuries. (See Account 924, Note A.)
13. Cost of safety, accident prevention, and similar educational activities.

Expenses:

1. Communication service provided for system control purposes.
2. System record and report forms.
3. Meals, traveling, and incidental expenses.

582 Station Expenses

This account shall include the cost of labor, employee pensions and benefits, social security and other payroll taxes, injuries and damages, property insurance, property taxes, materials used, and expenses incurred in the operation of distribution substations.

Items

Labor:

1. Supervising station operation.
2. Adjusting station equipment where such adjustment primarily affects performance, such as regulating the flow of cooling water, adjusting current in fields of a machine, changing voltage of regulators, or changing station transformer taps.
3. Keeping station log and records and preparing reports on station operation.
4. Inspecting, testing, and calibrating station equipment for the purpose of checking its performance.
5. Operating switching and other station equipment.
6. Standing watch, guarding, and patrolling station and station yard.
7. Sweeping, mopping, and tidying station.
8. Care of grounds, including snow removal, and grass cutting.

Taxes:

1. Federal and state unemployment.
2. F.I.C.A.
3. Property.

Employee Pensions and Benefits: The portion of employee pensions and benefits specifically identifiable with employees' labor costs charged herein or, in the absence of specific employee identification, the portion of employee pensions and benefits, allocated on the more equitable basis of either direct

labor dollars or direct labor hours, applicable to the labor items detailed above, including:

1. Accruals for or payments to pension funds or to insurance companies for pension purposes.
2. Group and life insurance premiums (credit dividends received).
3. Payments for medical and hospital services and expenses of employees when not the result of occupational injuries.
4. Payments for accident, sickness, hospital, and death benefits or insurance.
5. Payments to employees incapacitated for service or on leave of absence beyond periods normally allowed when not the result of occupational injuries or in excess of statutory awards.
6. Expenses in connection with educational and recreational activities for the benefit of employees.

Insurance:

1. Premiums payable to insurance companies for fire, storm, burglary, boiler explosion, lightning, fidelity, riot, and similar insurance.
2. Amounts credited to Account 228.1, Accumulated Provision for Property Insurance, for similar protection.
3. Special costs incurred in procuring insurance.
4. Insurance inspection service.
5. Insurance counsel, brokerage fees, and expenses.
6. Premiums payable to insurance companies for protection against claims from injuries and damages by employees or others, such as public liability, property damages, casualty, employee liability, etc., and amounts credited to Account 228.2, Accumulated Provision for Injuries and Damage, for similar protection.
7. Losses not covered by insurance or reserve accruals on account of injuries or deaths to employees or others and damages to the property of others.
8. Fees and expenses of claim investigators.
9. Payment of awards to claimants for court costs and attorneys' services.
10. Medical and hospital service and expenses for employees as the result of occupational injuries or resulting from claims of others.
11. Compensation payments under workmen's compensation laws.
12. Compensation paid while incapacitated as the result of occupational injuries. (See Account 924, Note A.)
13. Cost of safety, accident prevention, and similar educational activities.

Materials and Expenses:

1. Building service expenses.
2. Operating, supplies, such as lubricants, commutator brushes, water, and rubber goods.
3. Station meter and instrument supplies, such as ink and charts.
4. Station record and report forms.
5. Tool expense.
6. Transportation expense.
7. Meals, traveling, and incidental expenses.

NOTE: If the utility owns storage battery equipment used for supplying electricity to customers in periods of emergency, the cost of operating labor and of supplies, such as acid, gloves, hydrometers, thermometers, soda, automatic cell fillers, and acid proof shoes shall be included in this account. If significant in amount, a separate subdivision shall be maintained for such expenses.

583 Overhead Line Expenses

584 Underground Line Expenses

These accounts shall include, respectively, the cost of labor, employee pensions and benefits, social security and other payroll taxes, injuries and damages, property insurance, property taxes, materials used, and expenses incurred in the operation of overhead and underground distribution lines.

Items

Labor:

1. Supervising line operation.
2. Changing line transformer taps.
3. Inspecting and testing lightning arresters, line circuit breakers, switches, and grounds.
4. Inspecting and testing line transformers for the purpose of determining load, temperature, or operation performance.
5. Patrolling lines.
6. Load tests and voltage surveys of feeders, circuits, and line transformers.
7. Removing line transformers and voltage regulators with or without replacement.

8. Installing line transformers or voltage regulators with or without change in capacity provided that the cost of first installation of these items is included in Account 368, Line Transformers.

9. Voltage surveys, either routine or upon request of customers, including voltage tests at customer's main switch.

10. Transferring loads, switching and reconnecting circuits and equipment for operation purpose.

11. Electrolysis surveys.

12. Inspecting and adjusting line testing equipment.

Taxes:

1. Federal and State unemployment.
2. F.I.C.A,
3. Property.

Employee Pensions and Benefits: The portion of employee pensions and benefits specifically identifiable with employees' labor costs charged herein or, in the absence of specific employee identification, the portion of employee pensions and benefits, allocated on the more equitable basis of either direct labor dollars or direct labor hours, applicable to the labor items detailed above, including:

1. Accruals for or payments to pension funds or to insurance companies for pension purposes.

2. Group and life insurance premiums (credit dividends received).

3. Payments for medical and hospital services and expenses of employees when not the result of occupational injuries.

4. Payments for accident, sickness, hospital, and death benefits or insurance.

5. Payments to employees incapacitated for service or on leave of absence beyond periods normally allowed when not the result of occupational injuries or in excess of statutory awards.

6. Expenses in connection with educational and recreational activities for the benefit of employees.

Insurance:

1. Premiums payable to insurance companies for fire, storm, burglary, boiler explosion, lightning, fidelity, riot, and similar insurance.

2. Amounts credited to Account 228.1, Accumulated Provision for Property Insurance, for similar protection.

3. Special costs incurred in procuring insurance.

4. Insurance inspection service.

5. Insurance counsel, brokerage fees, and expenses.

6. Premiums payable to insurance companies for protection against claims from injuries and damages by employees or others, such as public liability, property damages, casualty, employee liability, etc., and amounts credited to Account 228.2, Accumulated Provision for Injuries and Damage, for similar protection.

7. Losses not covered by insurance or reserve accruals on account of injuries or deaths to employees or others and damages to the property of others.

8. Fees and expenses of claim investigators.

9. Payment of awards to claimants for court costs and attorneys' services.

10. Medical and hospital service and expenses for employees as the result of occupational injuries or resulting from claims of others.

11. Compensation payments under workmen's compensation laws.

12. Compensation paid while incapacitated as the result of occupational injuries. (See Account 924, Note A.)

13. Cost of safety, accident prevention, and similar educational activities.

Materials and Expenses:

1. Tool expense.
2. Transportation expense.
3. Meals, traveling, and incidental expenses.
4. Operating supplies, such as instrument charts, and rubber goods.

585 Street Lighting and Signal System Expenses

This account shall include the cost of labor, employee pensions and benefits, social security and other payroll taxes, injuries and damages, property insurance, property taxes, materials used, and expenses incurred in: (1) The operation of street lighting and signal system plant which is owned or leased by the utility; and (2) the operation and maintenance of such plant owned by customers where such work is done

regularly as a part of the street lighting and signal system service.

Items

Labor:

1. Supervising street lighting and signal systems operation.
2. Replacing lamps and incidental cleaning of glassware and fixtures in connection therewith.
3. Routine patrolling for lamp outages, extraneous nuisances, or encroachments.
4. Testing lines and equipment including voltage and current measurement.
5. Winding and inspection of time switch and other controls.

Taxes:

1. Federal and state unemployment.
2. F.I.C.A.
3. Property.

Employee Pensions and Benefits: The portion of employee pensions and benefits specifically identifiable with employees' labor costs charged herein or, in the absence of specific employee identification, the portion of employee pensions and benefits, allocated on the more equitable basis of either direct labor dollars or direct labor hours, applicable to the labor items detailed above, including:

1. Accruals for or payments to pension funds or to insurance companies for pension purposes.
2. Group and life insurance premiums (credit dividends received).
3. Payments for medical and hospital services and expenses of employees when not the result of occupational injuries.
4. Payments for accident, sickness, hospital, and death benefits or insurance.
5. Payments to employees incapacitated for service or on leave of absence beyond periods normally allowed when not the result of occupational injuries or in excess of statutory awards.
6. Expenses in connection with educational and recreational activities for the benefit of employees.

Insurance:

1. Premiums payable to insurance companies for fire, storm, burglary, boiler explosion, lightning, fidelity, riot, and similar insurance.
2. Amounts credited to Account 228.1, Accumulated Provision for Property Insurance, for similar protection.
3. Special costs incurred in procuring insurance.
4. Insurance inspection service.
5. Insurance counsel, brokerage fees, and expenses.
6. Premiums payable to insurance companies for protection against claims from injuries and damages by employees or others, such as public liability, property damages, casualty, employee liability, etc., and amounts credited to Account 228.2, Accumulated Provision for Injuries and Damage, for similar protection.
7. Losses not covered by insurance or reserve accruals on account of injuries or deaths to employees or others and damages to the property of others.
8. Fees and expenses of claim investigators.
9. Payment of awards to claimants for court costs and attorneys' services.
10. Medical and hospital service and expenses for employees as the result of occupational injuries or resulting from claims of others.
11. Compensation payments under workmen's compensation laws.
12. Compensation paid while incapacitated as the result of occupational injuries. (See Account 924, Note A.)
13. Cost of safety, accident prevention, and similar educational activities.

Materials and Expenses:

1. Street lamp renewals.
2. Transportation and tool expense.
3. Meals, traveling, and incidental expenses.

586 Meter Expenses

This account shall include the cost of labor, employee pensions and benefits, social security and other payroll taxes, injuries and damages, property insurance, property taxes, materials used, and expenses incurred in the operation of customer meters and associated equipment.

Items

Labor:

1. Supervising meter operation.

2. Clerical work on meter history and associated equipment record cards, test cards, and reports.

3. Disconnecting and reconnecting, removing and reinstalling, sealing and unsealing meters and other metering equipment in connection with initiating or terminating services including the cost of obtaining meter readings, if incidental to such operation.

4. Consolidating meter installations due to elimination of separate meters for different rates of service.

5. Changing or relocating meters, instrument transformers, time switches, and other metering equipment.

6. Resetting time controls, checking operation of demand meters and other metering equipment, when done as an independent operation.

7. Inspecting and adjusting meter testing equipment.

8. Inspecting and testing meters, instrument transformers, time switches, and other metering equipment on premises or in shops excluding inspecting and testing incidental to maintenance.

Taxes:

1. Federal and state unemployment.

2. F.I.C.A.

3. Property.

Employee Pensions and Benefits: The portion of employee pensions and benefits specifically identifiable with employees' labor costs charged herein or, in the absence of specific employee identification, the portion of employee pensions and benefits, allocated on the more equitable basis of either direct labor dollars or direct labor hours, applicable to the labor items detailed above, including:

1. Accruals for or payments to pension funds or to insurance companies for pension purposes.

2. Group and life insurance premiums (credit dividends received).

3. Payments for medical and hospital services and expenses of employees when not the result of occupational injuries.

4. Payments for accident, sickness, hospital, and death benefits or insurance.

5. Payments to employees incapacitated for service or on leave of absence beyond periods normally allowed when not the result of occupational injuries or in excess of statutory awards.

6. Expenses in connection with educational and recreational activities for the benefit of employees.

Insurance:

1. Premiums payable to insurance companies for fire, storm, burglary, boiler explosion, lightning, fidelity, riot, and similar insurance.

2. Amounts credited to Account 228.1, Accumulated Provision for Property Insurance, for similar protection.

3. Special costs incurred in procuring insurance.

4. Insurance inspection service.

5. Insurance counsel, brokerage fees, and expenses.

6. Premiums payable to insurance companies for protection against claims from injuries and damages by employees or others, such as public liability, property damages, casualty, employee liability, etc., and amounts credited to Account 228.2, Accumulated Provision for Injuries and Damage, for similar protection.

7. Losses not covered by insurance or reserve accruals on account of injuries or deaths to employees or others and damages to the property of others.

8. Fees and expenses of claim investigators.

9. Payment of awards to claimants for court costs and attorneys' services.

10. Medical and hospital service and expenses for employees as the result of occupational injuries or resulting from claims of others.

11. Compensation payments under workmen's compensation laws.

12. Compensation paid while incapacitated as the result of occupational injuries. (See Account 924, Note A.)

13. Cost of safety, accident prevention, and similar educational activities.

Materials and Expenses

1. Meter seals and miscellaneous meter supplies.

2. Transportation expenses.

3. Meals, traveling, and incidental expenses.

4. Tool expenses.

NOTE: The cost of the first setting and testing of a meter is chargeable to utility plant, Account 370, Meters.

587 Customer Installations Expenses

This account shall include the cost of labor, employee pensions and benefits, social security and other payroll taxes, injuries and damages, property insurance, property taxes, materials used, and expenses incurred in work on customer installations in inspecting premises and in rendering services to customers of the nature of those indicated by the list of items hereunder.

Items

Labor:

1. Supervising customer installations work.
2. Inspecting premises, including the check of wiring for code compliance.
3. Investigating, locating, and clearing grounds on customers' wiring.
4. Investigating service complaints, including load tests of motors and lighting and power circuits on customers' premises; field investigations of complaints on bills or of voltage.
5. Installing, removing, renewing, and changing lamps and fuses.
6. Radio, television, and similar interference work including erection of new aerials on customers' premises and patrolling of lines, testing of lightning arresters, inspection of pole hardware, and examination on or off premises of customers' appliances, wiring, or equipment to locate cause of interference.
7. Installing, connecting, reinstalling, or removing leased property on customers' premises.
8. Testing, adjusting, and repairing customers' fixtures and appliances in the shop or on premises.
9. Cost of changing customers' equipment due to changes in service characteristics.
10. Investigation of current diversion including setting and removal of check meters and securing special readings thereon; special calls by employees in connection with discovery and settlement of current diversion; changes in customer wiring; and any other labor cost identifiable as caused by current diversion.

Taxes:

1. Federal and state unemployment.
2. F.I.C.A.
3. Property.

Employee Pensions and Benefits: The portion of employee pensions and benefits specifically identifiable with employees' labor costs charged herein or, in the absence of specific employee identification, the portion of employee pensions and benefits, allocated on the more equitable basis of either direct labor dollars or direct labor hours, applicable to the labor items detailed above, including:

1. Accruals for or payments to pension funds or to insurance companies for pension purposes.
2. Group and life insurance premiums (credit dividends received).
3. Payments for medical and hospital services and expenses of employees when not the result of occupational injuries.
4. Payments for accident, sickness, hospital, and death benefits or insurance.
5. Payments to employees incapacitated for service or on leave of absence beyond periods normally allowed when not the result of occupational injuries or in excess of statutory awards.
6. Expenses in connection with educational and recreational activities for the benefit of employees.

Insurance:

1. Premiums payable to insurance companies for fire, storm, burglary, boiler explosion, lightning, fidelity, riot, and similar insurance.
2. Amounts credited to Account 228.1, Accumulated Provision for Property Insurance, for similar protection.
3. Special costs incurred in procuring insurance.
4. Insurance inspection service.
5. Insurance counsel, brokerage fees, and expenses.
6. Premiums payable to insurance companies for protection against claims from injuries and damages by employees or others, such as public liability, property damages, casualty, employee liability, etc., and amounts credited to Account 228.2, Accumulated Provision for Injuries and Damage, for similar protection.
7. Losses not covered by insurance or reserve accruals on account of injuries or deaths to employees or others and damages to the property of others.
8. Fees and expenses of claim investigators.

9. Payment of awards to claimants for court costs and attorneys' services.

10. Medical and hospital service and expenses for employees as the result of occupational injuries or resulting from claims of others.

11. Compensation payments under workmen's compensation laws.

12. Compensation paid while incapacitated as the result of occupational injuries. (See Account 924, Note A.)

13. Cost of safety, accident prevention, and similar educational activities.

Materials and Expenses:

1. Lamp and fuse renewals.

2. Materials used in servicing customers' fixtures, appliances, and equipment.

3. Power, light, heat, telephone, and other expenses of the appliance repair department.

4. Tool expense.

5. Transportation expense, including pickup and delivery charges.

6. Meals, traveling, and incidental expenses.

7. Rewards paid for discovery of current diversion.

NOTE A: Amounts billed customers for any work, the cost of which is charged to this account, shall be credited to this account. Any excess over costs resulting therefrom, shall be transferred to Account 451, Miscellaneous Service Revenues.

NOTE B: Do not include in this account expenses incurred in connection with merchandising, jobbing, and contract work.

588 Miscellaneous Distribution Expenses

This account shall include the cost of labor, employee pensions and benefits, social security and other payroll taxes, injuries and damages, materials used, and expenses incurred in distribution system operation not provided for elsewhere.

Items

Labor:

1. General records of physical characteristics of lines and substations, such as capacities.

2. Ground resistance records.

3. Joint pole maps and records.

4. Distribution system voltage and load records.

5. Preparing maps and prints.

6. Service interruption and trouble records.

7. General clerical and stenographic work except that chargeable to Account 586, Meter Expenses.

Taxes:

1. Federal and state unemployment.

2. F.I.C.A.

Employee Pensions and Benefits: The portion of employee pensions and benefits specifically identifiable with employees' labor costs charged herein or, in the absence of specific employee identification, the portion of employee pensions and benefits, allocated on the more equitable basis of either direct labor dollars or direct labor hours, applicable to the labor items detailed above, including:

1. Accruals for or payments to pension funds or to insurance companies for pension purposes.

2. Group and life insurance premiums (credit dividends received).

3. Payments for medical and hospital services and expenses of employees when not the result of occupational injuries.

4. Payments for accident, sickness, hospital, and death benefits or insurance.

5. Payments to employees incapacitated for service or on leave of absence beyond periods normally allowed when not the result of occupational injuries or in excess of statutory awards.

6. Expenses in connection with educational and recreational activities for the benefit of employees.

Insurance:

1. Premiums payable to insurance companies for protection against claims from injuries and damages by employees or others such as public liability, property damages, casualty, employee liability, etc., and amounts credited to Account 228.2, Accumulated Provision for Injuries and Damage, for similar protection.

2. Losses not covered by insurance or reserve accruals on account of injuries or deaths to employees or others and damages to the property of others.

3. Fees and expenses of claim investigators.

4. Payment of awards to claimants for court costs and attorneys' services.

5. Medical and hospital service and expenses for employees as the result of occupational injuries or resulting from claims of others.

6. Compensation payments under workmen's compensation laws.

7. Compensation paid while incapacitated as the result of occupational injuries. (See Account 924, Note A.)

8. Cost of safety, accident prevention, and similar educational activities.

Expenses:

1. Operating records covering poles, transformers, manholes, cables, and other distribution facilities. Exclude meter records chargeable to Account 586, Meter Expenses, and station records chargeable to Account 582, Station Expenses, and stores records chargeable to Account 163, Stores Expense Undistributed.

2. Janitor work at distribution office buildings including snow removal and grass cutting.

3. Communication service.

4. Building service expenses.

5. Miscellaneous office supplies and expenses, printing and stationery, maps and records, and first-aid supplies.

6. Research, development, and demonstration expenses.

589 Rents

This account shall include rents of property of others used, occupied, or operated in connection with the distribution system, including payments to the United States and others for the use and occupancy of public lands and reservations for distribution line rights of way. (See § 1767.17 (c).)

(Maintenance)

590 Maintenance Supervision and Engineering

This account shall include the cost of labor, employee pensions and benefits, social security and other payroll taxes, injuries and damages, and expenses incurred in the general supervision and direction of maintenance of the distribution system. Direct field supervision of specific jobs shall be charged to the appropriate maintenance account. (See § 1767.17(a).)

591 Maintenance of Structures

This account shall include the cost of labor, employee pensions and benefits, social security and other payroll taxes, injuries and damages, materials used, and expenses incurred in maintenance of structures, the book cost of which is includible in Account 361, Structures and Improvements. (See § 1767.17(b).)

592 Maintenance of Station Equipment

This account shall include the cost of labor, employee pensions and benefits, social security and other payroll taxes, injuries and damages, materials used, and expenses incurred in maintenance of plant, the book cost of which is includible in Account 362, Station Equipment, and Account 363, Storage Battery Equipment. (See § 1767.17(b).)

593 Maintenance of Overhead Lines

This account shall include the cost of labor, employee pensions and benefits, social security and other payroll taxes, injuries and damages, materials used, and expenses incurred in the maintenance of overhead distribution line facilities, the book cost of which is includible in Account 364, Poles, Towers and Fixtures; Account 365, Overhead Conductors and Devices; and Account 369, Services. (See § 1767.17(b).)

Items

1. Work of the following character on poles, towers, and fixtures:

a. Installing additional clamps or removing clamps or strain insulators on guys in place.

b. Moving line or guy pole in relocation of pole or section of line.

c. Painting poles, towers, crossarms, or pole extensions.

d. Readjusting and changing position of guys or braces.

e. Realigning and straightening poles, crossarms, braces, pins, racks, brackets, and other pole fixtures.

f. Reconditioning reclaimed pole fixtures.

g. Relocating crossarms, racks, brackets, and other fixtures on poles.

h. Repairing pole supported platform.

i. Repairs by others to jointly owned poles.

j. Shaving, cutting rot, or treating poles or crossarms in use or salvaged for reuse.

k. Stubbing poles already in service.

l. Supporting conductors, transformers, and other fixtures and transferring them to new poles during pole replacements.

m. Maintaining pole signs, stencils, and tags.

2. Work of the following character on overhead conductors and devices:

a. Overhauling and repairing line cutouts, line switches, line breakers, and capacitor installations.

b. Cleaning insulators and bushings.

c. Refusing line cutouts.

d. Repairing line oil circuit breakers and associated relays and control wiring.

e. Repairing grounds.

f. Resagging, retying, or rearranging position or spacing of conductors.

g. Standing by phones, going to calls, cutting faulty lines clear, or similar activities at times of emergency.

h. Sampling, testing, changing, purifying, and replenishing insulating oil.

i. Transferring loads, switching, and reconnecting circuits and equipment for maintenance purposes.

j. Repairing line testing equipment.

k. Trimming trees and clearing brush.

l. Chemical treatment of right-of-way area when occurring subsequent to construction of line.

3. Work of the following character on overhead services:

a. Moving position of service either on pole or on customers' premises.

b. Pulling slack in service wire.

c. Retying service wire.

d. Refastening or tightening service bracket.

Taxes:

1. Federal and state unemployment.

2. F.I.C.A.

Employee Pensions and Benefits: The portion of employee pensions and benefits specifically identifiable with employees' labor costs charged herein or, in the absence of specific employee identification, the portion of employee pensions and benefits, allocated on the more equitable basis of either direct labor dollars or direct labor hours, applicable to the labor items detailed above, including:

1. Accruals for or payments to pension funds or to insurance companies for pension purposes.

2. Group and life insurance premiums (credit dividends received).

3. Payments for medical and hospital services and expenses of employees when not the result of occupational injuries.

4. Payments for accident, sickness, hospital, and death benefits or insurance.

5. Payments to employees incapacitated for service or on leave of absence beyond periods normally allowed when not the result of occupational injuries or in excess of statutory awards.

6. Expenses in connection with educational and recreational activities for the benefit of employees.

Insurance:

1. Premiums payable to insurance companies for protection against claims from injuries and damages by employees or others, such as public liability, property damages, casualty, employee liability, etc., and amounts credited to Account 228.2, Accumulated Provision for Injuries and Damage, for similar protection.

2. Losses not covered by insurance or reserve accruals on account of injuries or deaths to employees or others and damages to the property of others.

3. Fees and expenses of claim investigators.

4. Payment of awards to claimants for court costs and attorneys' services.

5. Medical and hospital service and expenses for employees as the result of occupational injuries or resulting from claims of others.

6. Compensation payments under workmen's compensation laws.

7. Compensation paid while incapacitated as the result of occupational injuries. (See Account 924, Note A.)

8. Cost of safety, accident prevention, and similar educational activities.

594 Maintenance of Underground Lines

This account shall include the cost of labor, employee pensions and benefits, social security and other payroll taxes, injuries and damages, materials used,

and expenses incurred in the maintenance of underground distribution line facilities, the book cost of which is includible in Account 366, Underground Conduit; Account 367, Underground Conductors and Devices; and Account 369, Services. (See § 1767.17(b).)

Items

1. Work of the following character on underground conduit:

a. Cleaning ducts, manholes, and sewer connections.

b. Moving or changing position of conduit or pipe.

c. Minor alterations of handholes, manholes, or vaults.

d. Refastening, repairing, or moving racks, ladders, or hangers in manholes or vaults.

e. Plugging and shelving ducts.

f. Repairs to sewers, drains, walls, and floors, rings, and covers.

2. Work of the following character on underground conductors and devices:

a. Repairing circuit breakers, switches, cutouts, network protectors, and associated relays and control wiring.

b. Repairing grounds.

c. Retraining and reconnecting cables in manholes including transfer of cables from one duct to another.

d. Repairing conductors and splices.

e. Repairing or moving junction boxes and potheads.

f. Refireproofing cables and repairing supports.

g. Repairing electrolysis preventive devices for cables.

h. Repairing cable bonding systems.

i. Sampling, testing, changing, purifying, and replenishing insulating oil.

j. Transferring loads, switching and reconnecting circuits and equipment for maintenance purposes.

k. Repairing line testing equipment.

l. Repairing oil or gas equipment in high voltage cable systems and replacement of oil or gas.

3. Work of the following character on underground services:

a. Cleaning ducts.

b. Repairing any underground service plant.

Taxes:

1. Federal and state unemployment.

2. F.I.C.A.

Employee Pensions and Benefits: The portion of employee pensions and benefits specifically identifiable with employees' labor costs charged herein or, in the absence of specific employee identification, the portion of employee pensions and benefits, allocated on the more equitable basis of either direct labor dollars or direct labor hours, applicable to the labor items detailed above, including:

1. Accruals for or payments to pension funds or to insurance companies for pension purposes.

2. Group and life insurance premiums (credit dividends received).

3. Payments for medical and hospital services and expenses of employees when not the result of occupational injuries.

4. Payments for accident, sickness, hospital, and death benefits or insurance.

5. Payments to employees incapacitated for service or on leave of absence beyond periods normally allowed when not the result of occupational injuries or in excess of statutory awards.

6. Expenses in connection with educational and recreational activities for the benefit of employees.

Insurance:

1. Premiums payable to insurance companies for protection against claims from injuries and damages by employees or others, such as public liability, property damages, casualty, employee liability, etc., and amounts credited to Account 228.2, Accumulated Provision for Injuries and Damage, for similar protection.

2. Losses not covered by insurance or reserve accruals on account of injuries or deaths to employees or others and damages to the property of others.

3. Fees and expenses of claim investigators.

4. Payment of awards to claimants for court costs and attorneys' services.

5. Medical and hospital service and expenses for employees as the result of occupational injuries or resulting from claims of others.

6. Compensation payments under workmen's compensation laws.

7. Compensation paid while incapacitated as the result of occupational injuries. (See Account 924, Note A.)

8. Cost of safety, accident prevention, and similar educational activities.

595 Maintenance of Line Transformers

This account shall include the cost of labor, employee pensions and benefits, social security and other payroll taxes, injuries and damages, materials used, and expenses incurred in maintenance of distribution line transformers, the book cost of which is includible in Account 368, Line Transformers. (See § 1767.17(b).)

596 Maintenance of Street Lighting and Signal Systems

This account shall include the cost of labor, employee pensions and benefits, social security and other payroll taxes, injuries and damages, materials used, and expenses incurred in maintenance of plant, the book cost of which is includible in Account 373, Street Lighting and Signal Systems. (See § 1767.17(b).)

597 Maintenance of Meters

This account shall include the cost of labor, employee pensions and benefits, social security and other payroll taxes, injuries and damages, materials used, and expenses incurred in the maintenance of meters and meter testing equipment, the book cost of which is includible in Account 370, Meters, and Account 395, Laboratory Equipment, respectively. (See § 1767.17(b).)

598 Maintenance of Miscellaneous Distribution Plant

This account shall include the cost of labor, employee pensions and benefits, social security and other payroll taxes, injuries and damages, materials used, and expenses incurred in maintenance of plant, the book cost of which is includible in Accounts 371, Installations on Customers' Premises, and Account 372, Leased Property on Customers' Premises, and any other plant the maintenance of which is assignable to the distribution function and is not provided for elsewhere. (See § 1767.17(b).)

Items

1. Work of similar nature to that listed in other distribution maintenance accounts.

2. Maintenance of office furniture and equipment used by distribution system department.

Taxes:

1. Federal and state unemployment.

2. F.I.C.A.

Employee Pensions and Benefits: The portion of employee pensions and benefits specifically identifiable with employees' labor costs charged herein or, in the absence of specific employee identification, the portion of employee pensions and benefits, allocated on the more equitable basis of either direct labor dollars or direct labor hours, applicable to the labor items detailed above, including:

1. Accruals for or payments to pension funds or to insurance companies for pension purposes.

2. Group and life insurance premiums (credit dividends received).

3. Payments for medical and hospital services and expenses of employees when not the result of occupational injuries.

4. Payments for accident, sickness, hospital, and death benefits or insurance.

5. Payments to employees incapacitated for service or on leave of absence beyond periods normally allowed when not the result of occupational injuries or in excess of statutory awards.

6. Expenses in connection with educational and recreational activities for the benefit of employees.

Insurance:

1. Premiums payable to insurance companies for protection against claims from injuries and damages by employees or others, such as public liability, property damages, casualty, employee liability, etc., and amounts credited to Account 228.2, Accumulated Provision for Injuries and Damage, for similar protection.

2. Losses not covered by insurance or reserve accruals on account of injuries or deaths to employees or others and damages to the property of others.

3. Fees and expenses of claim investigators.

4. Payment of awards to claimants for court costs and attorneys' services.

5. Medical and hospital service and expenses for employees as the result of

occupational injuries or resulting from claims of others.

6. Compensation payments under workmen's compensation laws.

7. Compensation paid while incapacitated as the result of occupational injuries. (See Account 924, Note A.)

8. Cost of safety, accident prevention, and similar educational activities.

[58 FR 59825, Nov. 10, 1993, as amended at 62 FR 42291, Aug. 6, 1997]

§1767.28 Customer accounts expenses.

The customer accounts expense accounts identified in this section shall be used by all RUS borrowers.

CUSTOMER ACCOUNTS EXPENSES

(Operation)

901 Supervision
902 Meter Reading Expenses
903 Customer Records and Collection Expenses
904 Uncollectible Accounts
905 Miscellaneous Customer Accounts Expenses

CUSTOMER ACCOUNTS EXPENSES

(Operation)

901 Supervision

This account shall include the cost of labor, employee pensions and benefits, social security and other payroll taxes, injuries and damages, and expenses incurred in the general direction and supervision of customer accounting and collecting activities. Direct supervision of a specific activity shall be charged to Account 902, Meter Reading Expenses, or Account 903, Customer Records and Collection Expenses, as appropriate. (See §1767.17(a).)

902 Meter Reading Expenses

This account shall include the cost of labor, employee pensions and benefits, social security and other payroll taxes, injuries and damages, materials used, and expenses incurred in reading customer meters, and determining consumption when performed by employees engaged in reading meters.

Items

Labor:

1. Addressing forms for obtaining meter readings by mail.

2. Changing and collecting meter charts used for billing purposes.

3. Inspecting time clocks and checking seals when performed by meter readers and the work represents a minor activity incidental to regular meter reading routine.

4. Reading meters, including demand meters, and obtaining load information for billing purposes. Exclude and charge to Account 586, Meter Expenses, or to Account 903, Customer Records and Collection Expenses, as applicable, the cost of obtaining meter readings, first and final, if incidental to the operation of removing or resetting, sealing or locking, and disconnecting or reconnecting meters.

5. Computing consumption from meter reader's book or from reports by mail when done by employees engaged in reading meters.

6. Collecting from prepayment meters when incidental to meter reading.

7. Maintaining record of customers' keys.

8. Computing estimated or average consumption when performed by employees engaged in reading meters.

Taxes:

1. Federal and state unemployment.

2. F.I.C.A.

Employee Pensions and Benefits: The portion of employee pensions and benefits specifically identifiable with employees' labor costs charged herein or, in the absence of specific employee identification, the portion of employee pensions and benefits, allocated on the more equitable basis of either direct labor dollars or direct labor hours, applicable to the labor items detailed above, including:

1. Accruals for or payments to pension funds or to insurance companies for pension purposes.

2. Group and life insurance premiums (credit dividends received).

3. Payments for medical and hospital services and expenses of employees when not the result of occupational injuries.

4. Payments for accident, sickness, hospital, and death benefits or insurance.

5. Payments to employees incapacitated for service or on leave of absence beyond periods normally allowed when

not the result of occupational injuries or in excess of statutory awards.

6. Expenses in connection with educational and recreational activities for the benefit of employees.

Insurance:

1. Premiums payable to insurance companies for protection against claims from injuries and damages by employees or others, such as public liability, property damages, casualty, employee liability, etc., and amounts credited to Account 228.2, Accumulated Provision for Injuries and Damage, for similar protection.

2. Losses not covered by insurance or reserve accruals on account of injuries or deaths to employees or others and damages to the property of others.

3. Fees and expenses of claim investigators.

4. Payment of awards to claimants for court costs and attorneys' services.

5. Medical and hospital service and expenses for employees as the result of occupational injuries or resulting from claims of others.

6. Compensation payments under workmen's compensation laws.

7. Compensation paid while incapacitated as the result of occupational injuries. (See Account 924, Note A.)

8. Cost of safety, accident prevention, and similar educational activities.

Materials and Expenses:

1. Badges, lamps, and uniforms.

2. Demand charts, meter books and binders and forms for recording readings, but not the cost of preparation.

3. Postage and supplies used in obtaining meter readings by mail.

4. Transportation, meals, and incidental expenses.

903 Customer Records and Collection Expenses

This account shall include the cost of labor, employee pensions and benefits, social security and other payroll taxes, injuries and damages, materials used, and expenses incurred in work on customer applications, contracts, orders, credit investigations, billing and accounting, collections and complaints.

Items

Labor:

1. Receiving, preparing, recording, and handling routine orders for service, disconnections, transfers or meter tests initiated by the customer, excluding the cost of carrying out such orders, which is chargeable to the account appropriate for the work called for by such orders.

2. Investigations of customers' credit and keeping of records pertaining thereto, including records of uncollectible accounts written off.

3. Receiving, refunding, or applying customer deposits and maintaining customer deposit, line extension, and other miscellaneous records.

4. Checking consumption shown by meter readers' reports where incidental to preparation of billing date.

5. Preparing address plates and addressing bills and delinquent notices.

6. Preparing billing data.

7. Operating billing and bookkeeping machines.

8. Verifying billing records with contracts or rate schedules.

9. Preparing bills for delivery and mailing or delivering bills.

10. Collecting revenues, including collection from prepayment meters, unless incidental to meter-reading operations.

11. Balancing collections, preparing collections for deposit, and preparing cash reports.

12. Posting collections and other credits or charges to customer accounts and extending unpaid balances.

13. Balancing customer accounts and controls.

14. Preparing, mailing, or delivering delinquent notices and preparing reports of delinquent accounts.

15. Final meter reading of delinquent accounts when done by collectors incidental to regular activities.

16. Disconnecting and reconnecting service because of nonpayment bills.

17. Receiving, recording, and handling of inquiries, complaints, and requests for investigations from customers, including preparation of necessary orders, but excluding the cost of carrying out such orders, which is chargeable to the account appropriate for the work called for by such orders.

18. Statistical and tabulating work on customer accounts and revenues, but not including special analyses for

sales department, rate department, or other general purposes, unless incidental to regular customer accounting routines.

19. Preparing and periodically rewriting meter reading sheets.

20. Determining consumption and computing estimated or average consumption when performed by employees other than those engaged in reading meters.

Taxes:

1. Federal and state unemployment.
2. F.I.C.A.

Employee Pensions and Benefits: The portion of employee pensions and benefits specifically identifiable with employees' labor costs charged herein or, in the absence of specific employee identification, the portion of employee pensions and benefits, allocated on the more equitable basis of either direct labor dollars or direct labor hours, applicable to the labor items detailed above, including:

1. Accruals for or payments to pension funds or to insurance companies for pension purposes.
2. Group and life insurance premiums (credit dividends received).
3. Payments for medical and hospital services and expenses of employees when not the result of occupational injuries.
4. Payments for accident, sickness, hospital, and death benefits or insurance.
5. Payments to employees incapacitated for service or on leave of absence beyond periods normally allowed when not the result of occupational injuries or in excess of statutory awards.
6. Expenses in connection with educational and recreational activities for the benefit of employees.

Insurance:

1. Premiums payable to insurance companies for protection against claims from injuries and damages by employees or others, such as public liability, property damages, casualty, employee liability, etc., and amounts credited to Account 228.2, Accumulated Provision for Injuries and Damage, for similar protection.
2. Losses not covered by insurance or reserve accruals on account of injuries or deaths to employees or others and damages to the property of others.
3. Fees and expenses of claim investigators.
4. Payment of awards to claimants for court costs and attorneys' services.
5. Medical and hospital service and expenses for employees as the result of occupational injuries or resulting from claims of others.
6. Compensation payments under workmen's compensation laws.
7. Compensation paid while incapacitated as the result of occupational injuries. (See Account 924, Note A.)
8. Cost of safety, accident prevention, and similar educational activities.

Materials and Expenses:

1. Address plates and supplies.
2. Cash overages and shortages.
3. Commissions or fees to others for collecting.
4. Payments to credit organizations for investigations and reports.
5. Postage.
6. Transportation expenses, including transportation of customer bills and meter books under centralized billing procedures.
7. Transportation, meals expenses, and incidental expenses.
8. Bank charges, exchange, and other fees for cashing and depositing customers' checks.
9. Forms for recording orders for services, or removals.
10. Rent of mechanical equipment.

NOTE: The cost of work on meter history and meter location records in chargeable to Account 586, Meter Expenses.

904 Uncollectible Accounts

This amount shall be charged with amounts sufficient to provide for losses from uncollectible utility revenues. Concurrent credits shall be made to Account 144, Accumulated Provision for Uncollectible Accounts—Credit. Losses from uncollectible accounts shall be charged to Account 144.

905 Miscellaneous Customer Accounts Expenses

This account shall include the cost of labor, employee pensions and benefits, social security and other payroll taxes, injuries and damages, property insurance, property taxes, materials used,

and expenses incurred not provided for in other accounts.

Items

Labor:

1. General clerical and stenographic work.
2. Miscellaneous labor.

Taxes:

1. Federal and state unemployment.
2. F.I.C.A.
3. Property.

Employee Pensions and Benefits: The portion of employee pensions and benefits specifically identifiable with employees' labor costs charged herein, or, in the absence of specific employee identification, the portion of employee pensions and benefits, allocated on the more equitable basis of either direct labor dollars or direct labor hours, applicable to the labor items detailed above, including:

1. Accruals for or payments to pension funds or to insurance companies for pension purposes.
2. Group and life insurance premiums (credit dividends received).
3. Payments for medical and hospital services and expenses of employees when not the result of occupational injuries.
4. Payments for accident, sickness, hospital, and death benefits or insurance.
5. Payments to employees incapacitated for service or on leave of absence beyond periods normally allowed when not the result of occupational injuries or in excess of statutory awards.
6. Expenses in connection with educational and recreational activities for the benefit of employees.

Insurance:

1. Premiums payable to insurance companies for fire, storm, burglary, boiler explosion, lightning, fidelity, riot, and similar insurance.
2. Amounts credited to Account 228.1, Accumulated Provision for Property Insurance, for similar protection.
3. Special costs incurred in procuring insurance.
4. Insurance inspection service.
5. Insurance counsel, brokerage fees, and expenses.
6. Premiums payable to insurance companies for protection against claims from injuries and damages by employees or others, such as public liability, property damages, casualty, employee liability, etc., and amounts credited to Account 228.2, Accumulated Provision for Injuries and Damage, for similar protection.
7. Losses not covered by insurance or reserve accruals on account of injuries or deaths to employees or others and damages to the property of others.
8. Fees and expenses of claim investigators.
9. Payment of awards to claimants for court costs and attorneys' services.
10. Medical and hospital service and expenses for employees as the result of occupational injuries or resulting from claims of others.
11. Compensation payments under workmen's compensation laws.
12. Compensation paid while incapacitated as the result of occupational injuries. (See Account 924, Note A.)
13. Cost of safety, accident prevention, and similar educational activities.

Materials and Expenses:

1. Communication service.
2. Miscellaneous office supplies and expenses and stationery and printing other than those specifically provided for in Account 902 and Account 903.

[58 FR 59825, Nov. 10, 1993, as amended at 62 FR 42311, Aug. 6, 1997; 62 FR 43201, Aug. 12, 1997]

§ 1767.29 Customer service and informational expenses.

The customer service and informational expense accounts identified in this section shall be used by all RUS borrowers.

CUSTOMER SERVICE AND INFORMATIONAL EXPENSES

(Operation)

907 Supervision
908 Customer Assistance Expenses
909 Informational and Instructional Advertising Expenses
910 Miscellaneous Customer Service and Informational Expenses

CUSTOMER SERVICE AND INFORMATIONAL EXPENSES

(Operation)

907 Supervision

This account shall include the cost of labor, employee pensions and benefits, social security and other payroll taxes, injuries and damages, and expenses incurred in the general direction and supervision of customer service activities, the object of which is to encourage safe, efficient, and economical use of the utility's service. Direct supervision of a specific activity within customer service and informational expense classification shall be charged to the account wherein the costs of such activity are included. (See §1767.17(a).)

908 Customer Assistance Expenses

This account shall include the cost of labor, employee pensions and benefits, social security and other payroll taxes, injuries and damages, materials used, and expenses incurred in providing instructions or assistance to customers, the object of which is to encourage safe, efficient, and economical use of the utility's service.

Items

Labor:

1. Direct supervision of department.
2. Processing customer inquiries relating to the proper use of electric equipment, the replacement of such equipment, and information related to such equipment.
3. Advice directed to customers as to how they may achieve the most efficient and safest use of electric equipment.
4. Demonstrations, exhibits, lectures, and other programs designed to instruct customers in the safe, economical, or efficient use of electric service, and/or oriented toward conservation of energy.
5. Engineering and technical advice to customers, the object of which is to promote safe, efficient, and economical use of the utility's service.

Taxes:

1. Federal and state unemployment.
2. F.I.C.A.

Employee Pensions and Benefits: The portion of employee pensions and benefits specifically identifiable with employees' labor costs charged herein or, in the absence of specific employee identification, the portion of employee pensions and benefits, allocated on the more equitable basis of either direct labor dollars or direct labor hours, applicable to the labor items detailed above, including:

1. Accruals for or payments to pension funds or to insurance companies for pension purposes.
2. Group and life insurance premiums (credit dividends received).
3. Payments for medical and hospital services and expenses of employees when not the result of occupational injuries.
4. Payments for accident, sickness, hospital, and death benefits or insurance.
5. Payments to employees incapacitated for service or on leave of absence beyond periods normally allowed when not the result of occupational injuries or in excess of statutory awards.
6. Expenses in connection with educational and recreational activities for the benefit of employees.

Insurance:

1. Premiums payable to insurance companies for protection against claims from injuries and damages by employees or others, such as public liability, property damages, casualty, employee liability, etc., and amounts credited to Account 228.2, Accumulated Provision for Injuries and Damage, for similar protection.
2. Losses not covered by insurance or reserve accruals on account of injuries or deaths to employees or others and damages to the property of others.
3. Fees and expenses of claim investigators.
4. Payment of awards to claimants for court costs and attorneys' services.
5. Medical and hospital service and expenses for employees as the result of occupational injuries or resulting from claims of others.
6. Compensation payments under workmen's compensation laws.
7. Compensation paid while incapacitated as the result of occupational injuries. (See Account 924, Note A.)

8. Cost of safety, accident prevention, and similar educational activities.

Materials and Expenses:

1. Supplies and expenses pertaining to demonstrations, exhibits, lectures, and other programs.
2. Loss in value on equipment and appliances used for customer assistance programs.
3. Office supplies and expenses.
4. Transportation, meals, and incidental expenses.

NOTE: Do not include in this account expenses that are provided for elsewhere, such as Accounts 416, Costs and Expenses of Merchandising, Jobbing, and Contract Work; 587, Customer Installations Expenses; and 912, Demonstrating and Selling Expenses.

909 Informational and Instructional Advertising Expenses

This account shall include the cost of labor, employee pensions and benefits, social security and other payroll taxes, injuries and damages, materials used, and expenses incurred in activities which primarily convey information as to what the utility urges or suggests customers should do in utilizing electric service to protect health and safety, to encourage environmental protection, to utilize their electric equipment safely and economically, or to conserve electric energy.

Items

Labor:

1. Direct supervision of information activities.
2. Preparing informational materials for newspapers, periodicals, and billboards and preparing and conducting informational motion pictures, radio and television programs.
3. Preparing informational booklets and bulletins used in direct mailings.
4. Preparing informational window and other displays.
5. Employing agencies, selecting media, and conducting negotiations in connection with the placement and subject matter of information programs.

Taxes:

1. Federal and state unemployment.
2. F.I.C.A.

Employee Pensions and Benefits: The portion of employee pensions and benefits specifically identifiable with employees' labor costs charged herein or, in the absence of specific employee identification, the portion of employee pensions and benefits, allocated on the more equitable basis of either direct labor dollars or direct labor hours, applicable to the labor items detailed above, including:

1. Accruals for or payments to pension funds or to insurance companies for pension purposes.
2. Group and life insurance premiums (credit dividends received).
3. Payments for medical and hospital services and expenses of employees when not the result of occupational injuries.
4. Payments for accident, sickness, hospital, and death benefits or insurance.
5. Payments to employees incapacitated for service or on leave of absence beyond periods normally allowed when not the result of occupational injuries or in excess of statutory awards.
6. Expenses in connection with educational and recreational activities for the benefit of employees.

Insurance:

1. Premiums payable to insurance companies for protection against claims from injuries and damages by employees or others, such as public liability, property damages, casualty, employee liability, etc., and amounts credited to Account 228.2, Accumulated Provision for Injuries and Damage, for similar protection.
2. Losses not covered by insurance or reserve accruals on account of injuries or deaths to employees or others and damages to the property of others.
3. Fees and expenses of claim investigators.
4. Payment of awards to claimants for court costs and attorneys' services.
5. Medical and hospital service and expenses for employees as the result of occupational injuries or resulting from claims of others.
6. Compensation payments under workmen's compensation laws.
7. Compensation paid while incapacitated as the result of occupational injuries. (See Account 924, Note A.)

8. Cost of safety, accident prevention, and similar educational activities.

Materials and Expenses:

1. Use of newspapers, periodicals, billboards, and radio for informational purposes.
2. Postage on direct mailings to customers exclusive of postage related to billings.
3. Printing of informational booklets, dodgers, and bulletins.
4. Supplies and expenses in preparing informational materials by the utility.
5. Office supplies and expenses.

NOTE A: Exclude from this account and charge to Account 930.2, Miscellaneous General Expenses, the cost of publication of stockholder reports, dividend notices, bond redemption notices, financial statements, and other notices of a general corporate character. Also exclude all expenses of a promotional, institutional, goodwill, or political nature, which are includible in such accounts as 913, Advertising Expenses; 930.1, General Advertising Expenses; and 426.4, Expenditures for Certain Civic, Political and Related Activities.

NOTE B: Entries relating to informational advertising included in this account shall contain or refer to supporting documents which identify the specific advertising message. If references are used, copies of the advertising message shall be readily available.

910 Miscellaneous Customer Service and Informational Expenses

This account shall include the cost of labor, employee pensions and benefits, social security and other payroll taxes, injuries and damages, property insurance, property taxes, materials used, and expenses incurred in connection with customer service and informational activities which are not includible in other customer information expense accounts.

Items

Labor:

1. General clerical and stenographic work not assigned to specific customer service and informational programs.
2. Miscellaneous labor.

Taxes:

1. Federal and state unemployment.
2. F.I.C.A.
3. Property.

Employee Pensions and Benefits: The portion of employee pensions and benefits specifically identifiable with employees' labor costs charged herein or, in the absence of specific employee identification, the portion of employee pensions and benefits, allocated on the more equitable basis of either direct labor dollars or direct labor hours, applicable to the labor items detailed above, including:

1. Accruals for or payments to pension funds or to insurance companies for pension purposes.
2. Group and life insurance premiums (credit dividends received).
3. Payments for medical and hospital services and expenses of employees when not the result of occupational injuries.
4. Payments for accident, sickness, hospital, and death benefits or insurance.
5. Payments to employees incapacitated for service or on leave of absence beyond periods normally allowed when not the result of occupational injuries or in excess of statutory awards.
6. Expenses in connection with educational and recreational activities for the benefit of employees.

Insurance:

1. Premiums payable to insurance companies for fire, storm, burglary, boiler explosion, lightning, fidelity, riot, and similar insurance.
2. Amounts credited to Account 228.1, Accumulated Provision for Property Insurance, for similar protection.
3. Special costs incurred in procuring insurance.
4. Insurance inspection service.
5. Insurance counsel, brokerage fees, and expenses.
6. Premiums payable to insurance companies for protection against claims from injuries and damages by employees or others, such as public liability, property damages, casualty, employee liability, etc., and amounts credited to Account 228.2, Accumulated Provision for Injuries and Damage, for similar protection.
7. Losses not covered by insurance or reserve accruals on account of injuries or deaths to employees or others and damages to the property of others.
8. Fees and expenses of claim investigators.

9. Payment of awards to claimants for court costs and attorneys' services.

10. Medical and hospital service and expenses for employees as the result of occupational injuries or resulting from claims of others.

11. Compensation payments under workmen's compensation laws.

12. Compensation paid while incapacitated as the result of occupational injuries. (See Account 924, Note A.)

13. Cost of safety, accident prevention, and similar educational activities.

Materials and Expenses:

1. Communication service.

2. Printing, postage, and office supplies expenses.

[58 FR 59825, Nov. 10, 1993, as amended at 62 FR 42313, Aug. 6, 1997]

§ 1767.30 Sales expenses.

The sales expense accounts identified in this section shall be used by all RUS borrowers.

SALES EXPENSES

(Operation)

911 Supervision
912 Demonstrating and Selling Expenses
913 Advertising Expenses
916 Miscellaneous Sales Expenses

SALES EXPENSES

(Operation)

911 Supervision

This account shall include the cost of labor, employee pensions and benefits, social security and other payroll taxes, injuries and damages, and expenses incurred in the general direction and supervision of sales activities, except merchandising. Direct supervision of a specific activity, such as demonstrating, selling, or advertising shall be charged to the account wherein the costs of such activity are included. (See § 1767.17(a).)

912 Demonstrating and Selling Expenses

This account shall include the cost of labor, employee pensions and benefits, social security and other payroll taxes, injuries and damages, materials used, and expenses incurred in promotional, demonstrating, and selling activities, except by merchandising, the object of which is to promote or retain the use of utility services by present and prospective customers.

Items

Labor:

1. Demonstrating uses of utility services.

2. Conducting cooking schools, preparing recipes, and related home service activities.

3. Exhibitions, displays, lectures, and other programs designed to promote use of utility services.

4. Experimental and development work in connection with new and improved appliances and equipment, prior to general public acceptance.

5. Solicitation of new customers or of additional business from old customers, including commissions paid employees.

6. Engineering and technical advice to present or prospective customers in connection with promoting or retaining the use of utility services.

7. Special customer canvasses when their primary purpose is the retention of business or the promotion of new business.

Taxes:

1. Federal and state unemployment.

2. F.I.C.A.

Employee Pensions and Benefits: The portion of employee pensions and benefits specifically identifiable with employees' labor costs charged herein or, in the absence of specific employee identification, the portion of employee pensions and benefits, allocated on the more equitable basis of either direct labor dollars or direct labor hours, applicable to the labor items detailed above, including:

1. Accruals for or payments to pension funds or to insurance companies for pension purposes.

2. Group and life insurance premiums (credit dividends received).

3. Payments for medical and hospital services and expenses of employees when not the result of occupational injuries.

4. Payments for accident, sickness, hospital, and death benefits or insurance.

5. Payments to employees incapacitated for service or on leave of absence beyond periods normally allowed when not the result of occupational injuries or in excess of statutory awards.

6. Expenses in connection with educational and recreational activities for the benefit of employees.

Insurance:

1. Premiums payable to insurance companies for protection against claims from injuries and damages by employees or others, such as public liability, property damages, casualty, employee liability, etc., and amounts credited to Account 228.2, Accumulated Provision for Injuries and Damage, for similar protection.

2. Losses not covered by insurance or reserve accruals on account of injuries or deaths to employees or others and damages to the property of others.

3. Fees and expenses of claim investigators.

4. Payment of awards to claimants for court costs and attorneys' services.

5. Medical and hospital service and expenses for employees as the result of occupational injuries or resulting from claims of others.

6. Compensation payments under workmen's compensation laws.

7. Compensation paid while incapacitated as the result of occupational injuries. (See Account 924, Note A.)

8. Cost of safety, accident prevention, and similar educational activities.

Materials and Expenses:

1. Supplies and expenses pertaining to demonstration, experimental, and development activities.

2. Booth and temporary space rental.

3. Loss in value on equipment and appliances used for demonstration purposes.

4. Transportation, meals, and incidental expenses.

913 Advertising Expenses

This account shall include the cost of labor, employee pensions and benefits, social security and other payroll taxes, injuries and damages, materials used, and expenses incurred in advertising designed to promote or retain the use of utility service, except advertising the sale of merchandise by the utility.

Items

Labor:

1. Direct supervision of department.

2. Preparing advertising material for newspapers, periodicals, and billboards, and preparing and conducting motion pictures, radio, and television programs.

3. Preparing booklets and bulletins used in direct mail advertising.

4. Preparing window and other displays.

5. Clerical and stenographic work.

6. Investigating advertising agencies and media and conducting negotiations in connection with the placement and subject matter of sales advertising.

Taxes:

1. Federal and state unemployment.

2. F.I.C.A.

Employee Pensions and Benefits: The portion of employee pensions and benefits specifically identifiable with employees' labor costs charged herein or, in the absence of specific employee identification, the portion of employee pensions and benefits, allocated on the more equitable basis of either direct labor dollars or direct labor hours, applicable to the labor items detailed above, including:

1. Accruals for or payments to pension funds or to insurance companies for pension purposes.

2. Group and life insurance premiums (credit dividends received).

3. Payments for medical and hospital services and expenses of employees when not the result of occupational injuries.

4. Payments for accident, sickness, hospital, and death benefits or insurance.

5. Payments to employees incapacitated for service or on leave of absence beyond periods normally allowed when not the result of occupational injuries or in excess of statutory awards.

6. Expenses in connection with educational and recreational activities for the benefit of employees.

Insurance:

1. Premiums payable to insurance companies for protection against claims from injuries and damages by employees or others, such as public liability, property damages, casualty, employee liability, etc., and amounts

credited to Account 228.2, Accumulated Provision for Injuries and Damage, for similar protection.

2. Losses not covered by insurance or reserve accruals on account of injuries or deaths to employees or others and damages to the property of others.

3. Fees and expenses of claim investigators.

4. Payment of awards to claimants for court costs and attorneys' services.

5. Medical and hospital service and expenses for employees as the result of occupational injuries or resulting from claims of others.

6. Compensation payments under workmen's compensation laws.

7. Compensation paid while incapacitated as the result of occupational injuries. (See Account 924, Note A.)

8. Cost of safety, accident prevention, and similar educational activities.

Materials and Expenses:

1. Advertising in newspapers, periodicals, billboards, and radio for sales promotion purposes, but not including institutional or goodwill advertising includible in Account 930.1, General Advertising Expenses.

2. Materials and services given as prizes or otherwise in connection with civic lighting contests, canning, or cooking contests, and bazaars in order to publicize and promote the use of utility services.

3. Fees and expenses of advertising agencies and commercial artists.

4. Novelties for general distribution.

5. Postage on direct mail advertising.

6. Premiums distributed generally, such as recipe books when not offered as inducement to purchase appliances.

7. Printing booklets, dodgers, and bulletins.

8. Supplies and expenses in preparing advertising material.

9. Office supplies and expenses.

NOTE A: The cost of advertisements which set forth the value or advantages of utility service without reference to specific appliances, or, if reference is made to appliances, invites the reader to purchase appliances from his dealer or refer to appliances not carried for sale by the utility, shall be considered sales promotion advertising and charged to this account. However, advertisements which are limited to specific makes of appliances sold by the utility and price and terms, thereof, without referring to the value or advantages of utility service, shall be considered as merchandise advertising and the cost shall be charged to Costs and Expenses of Merchandising, Jobbing and Contract Work, Account 416.

NOTE B: Advertisements which substantially mention or refer to the value or advantages of utility service, together with specific reference to makes of appliance sold by the utility and the price, and terms, thereof, and designed for the joint purpose of increasing the use of utility service and the sales of appliances, shall be considered as a combination advertisement and the costs shall be distributed between this account and Account 416 on the basis of space, time, or other proportional factors.

NOTE C: Exclude from this account and charge to Account 930.2, Miscellaneous General Expenses, the cost of publication of stockholder reports, dividend notices, bond redemption notices, financial statements, and other notices of a general corporate character. Also exclude all institutional or goodwill advertising. (See Account 930.1, General Advertising Expenses.)

916 Miscellaneous Sales Expenses

This account shall include the cost of labor, employee pensions and benefits, social security and other payroll taxes, injuries and damages, property insurance, property taxes, materials used, and expenses incurred in connection with sales activities, except merchandising, which are not includible in other sales expense accounts.

Items

Labor:

1. General clerical and stenographic work not assigned to specific functions.

2. Special analysis of customer accounts and other statistical work for sales purposes not a part of the regular customer accounting and billing routine.

3. Miscellaneous labor.

Taxes:

1. Federal and state unemployment.

2. F.I.C.A.

3. Property.

Employee Pensions and Benefits: The portion of employee pensions and benefits specifically identifiable with employees' labor costs charged herein or, in the absence of specific employee identification, the portion of employee pensions and benefits, allocated on the

more equitable basis of either direct labor dollars or direct labor hours, applicable to the labor items detailed above, including:

1. Accruals for or payments to pension funds or to insurance companies for pension purposes.

2. Group and life insurance premiums (credit dividends received).

3. Payments for medical and hospital services and expenses of employees when not the result of occupational injuries.

4. Payments for accident, sickness, hospital, and death benefits or insurance.

5. Payments to employees incapacitated for service or on leave of absence beyond periods normally allowed when not the result of occupational injuries or in excess of statutory awards.

6. Expenses in connection with educational and recreational activities for the benefit of employees.

Insurance:

1. Premiums payable to insurance companies for fire, storm, burglary, boiler explosion, lightning, fidelity, riot, and similar insurance.

2. Amounts credited to Account 228.1, Accumulated Provision for Property Insurance, for similar protection.

3. Special costs incurred in procuring insurance.

4. Insurance inspection service.

5. Insurance counsel, brokerage fees, and expenses.

6. Premiums payable to insurance companies for protection against claims from injuries and damages by employees or others, such as public liability, property damages, casualty, employee liability, etc., and amounts credited to Account 228.2, Accumulated Provision for Injuries and Damage, for similar protection.

7. Losses not covered by insurance or reserve accruals on account of injuries or deaths to employees or others and damages to the property of others.

8. Fees and expenses of claim investigators.

9. Payment of awards to claimants for court costs and attorneys' services.

10. Medical and hospital service and expenses for employees as the result of occupational injuries or resulting from claims of others.

11. Compensation payments under workmen's compensation laws.

12. Compensation paid while incapacitated as the result of occupational injuries. (See Account 924, Note A.)

13. Cost of safety, accident prevention, and similar educational activities.

Materials and Expenses:

1. Communication service.

2. Printing, postage, office supplies, and expenses applicable to sales activities, except those chargeable to Account 913, Advertising Expenses.

[58 FR 59825, Nov. 10, 1993, as amended at 62 FR 42315, Aug. 6, 1997]

§ 1767.31 Administrative and general expenses.

The administrative and general expense accounts identified in this section shall be used by all RUS borrowers.

ADMINISTRATIVE AND GENERAL

(Operation)

920 Administrative and General Salaries
921 Office Supplies and Expenses
922 Administrative Expenses Transferred—Credit
923 Outside Services Employed
924 Property Insurance
925 Injuries and Damages
926 Employee Pensions and Benefits
927 Franchise Requirements
928 Regulatory Commission Expenses
929 Duplicate Charges—Credit
930.1 General Advertising Expenses
930.2 Miscellaneous General Expenses
931 Rents

(Maintenance)

935 Maintenance of General Plant

ADMINISTRATIVE AND GENERAL

(Operation)

920 Administrative and General Salaries

A. This account shall include the compensation (salaries, bonuses, employee pensions and benefits, social security and other payroll taxes, injuries and damages, and other consideration for services, but not including directors' fees) of officers, executives, and other employees of the utility properly chargeable to utility operations and

not chargeable directly to a particular operating function.

B. This account may be subdivided in accordance with a classification appropriate to the departmental or other functional organization of the utility.

921 Office Supplies and Expenses

A. This account shall include office supplies and expenses incurred in connection with the general administration of the utility's operations which are assignable to specific administrative or general departments and are not specifically provided for in other accounts. This includes the expenses of the various administrative and general departments, the salaries and wages of which are includible in Account 920.

B. This account may be subdivided in accordance with a classification appropriate to the departmental or other functional organization of the utility.

NOTE: Office expenses which are clearly applicable to any category of operating expenses other than the administrative and general category shall be included in the appropriate account in such category. Further, general expenses which apply to the utility as a whole rather than to a particular administrative function, shall be included in Account 930.2, Miscellaneous General Expenses.

Items

1. Automobile service, including charges through clearing account.
2. Bank messenger and service charges.
3. Books, periodicals, bulletins, and subscriptions to newspapers, newsletters, and tax services.
4. Building service expenses for customer accounts, sales, and administrative and general purposes.
5. Communication service expenses.
6. Cost of individual items of office equipment used by general departments which are of small value or short life.
7. Membership fees and dues in trade, technical, and professional associations paid by a utility for employees. (Company memberships are includible in Account 930.2.)
8. Office supplies and expenses.
9. Payment of court costs, witness fees, and other expenses of legal department.
10. Postage, printing, and stationery.
11. Meals, traveling, and incidental expenses.

922 Administrative Expenses Transferred—Credit

This account shall be credited with administrative expenses recorded in Account 920 and Account 921 which are transferred to construction costs or to nonutility accounts. (See § 1767.16 (d).)

923 Outside Services Employed

A. This account shall include the fees and expenses of professional consultants and others for general services which are not applicable to a particular operating function or other accounts. It shall include also the pay and expenses of persons engaged for a special or temporary administrative or general purpose in circumstances where the person so engaged is not considered as an employee of the utility.

B. This account shall be so maintained as to permit ready summarization according to the nature of service and the person furnishing the same.

Items

1. Fees, pay, and expenses of accountants and auditors, actuaries, appraisers, attorneys, engineering consultants, management consultants, negotiators, public relations counsel, and tax consultants.
2. Supervision fees and expenses paid under contracts for general management services.

NOTE: Do not include inspection and brokerage fees and commissions chargeable to other accounts or fees and expenses in connection with security issues which are includible in the expenses of issuing securities.

924 Property Insurance

A. This account shall include the cost of insurance or reserve accruals to protect the utility against losses and damages to owned or leased property used in its utility operations. It shall also include the cost of labor, employee pensions and benefits, social security and other payroll taxes, injuries and damages, and the related supplies and expenses incurred in property insurance activities.

B. Recoveries from insurance companies or others for property damages shall be credited to the account charged with the cost of the damage. If the damaged property has been retired, the credit shall be to the appropriate account for accumulated provision for depreciation.

C. Records shall be kept so as to show the amount of coverage for each class of insurance carried, the property covered, and the applicable premiums. Any dividends distributed by mutual insurance companies shall be credited to the accounts to which the insurance premiums were charged.

Items

1. Premiums payable to insurance companies for fire, storm, burglary, boiler explosion, lightning, fidelity, riot, and similar insurance.
2. Amounts credited to Account 228.1, Accumulated Provision for Property Insurance, for similar protection.
3. Special costs incurred in procuring insurance.
4. Insurance inspection service.
5. Insurance counsel, brokerage fees, and expenses.

NOTE A: The cost of insurance or reserve accruals capitalized, shall be charged to construction and retirement either directly or by transfers to construction and retirement work orders from this account.

NOTE B: The cost of insurance or reserve accruals for the following classes of property shall be charged as indicated:

1. Materials, supplies, and stores equipment to Account 163, Stores Expense Undistributed, or appropriate materials account.
2. Transportation and other general equipment to appropriate clearing accounts that may be maintained.
3. Electric plant leased to others to Account 413, Expenses of Electric Plant Leased to Others.
4. Nonutility property to the appropriate nonutility income account.
5. Merchandise and jobbing property to Account 416, Costs and Expenses of Merchandising, Jobbing and Contract Work.

NOTE C: The cost of labor, employee pensions and benefits, social security and other payroll taxes, and the related supplies and expenses of administrative and general employees who are only incidentally engaged in property insurance work may be included in Account 920 and Account 921, as appropriate.

NOTE D: The cost of insurance or reserve accruals applicable to the various utility functions shall be charged to the specific functional operations and the appropropriate miscellaneous administrative expense accounts either directly or by transfers from this account.

925 Injuries and Damages

A. This account shall include the cost of insurance or reserve accruals to protect the utility against injuries and damages claims of employees or others, losses of such character not covered by insurance, and expenses incurred in settlement of injuries and damages claims. It shall also include the cost of labor, employee pensions and benefits, social security and other payroll taxes, injuries and damages, related supplies, and expenses incurred in injuries and damages activities.

B. Reimbursements from insurance companies or others for expenses charged hereto on account of injuries, damages, and insurance dividends or refunds shall be credited to this account.

Items

1. Premiums payable to insurance companies for protection against claims from injuries and damages by employees or others, such as public liability, property damages, casualty, employee liability, etc., and amounts credited to Account 228.2, Accumulated Provision for Injuries and Damage, for similar protection.
2. Losses not covered by insurance or reserve accruals on account of injuries or deaths to employees or others and damages to the property of others.
3. Fees and expenses of claim investigators.
4. Payment of awards to claimants for court costs and attorneys' services.
5. Medical and hospital service and expenses for employees as the result of occupational injuries or resulting from claims of others.
6. Compensation payments under workmen's compensation laws.
7. Compensation paid while incapacitated as the result of occupational injuries. (See Note A.)
8. Cost of safety, accident prevention, and similar educational activities.

NOTE A: Payments to or in behalf of employees for accident or death benefits, hospital expenses, medical expenses, or for salaries while incapacitated for service or on leave of absence beyond periods normally allowed, when not the result of occupational injuries, shall be charged to Account 926, Employee Pensions and Benefits. (See also Note B of Account 926.)

NOTE B: The cost of injuries and damages or reserve accruals capitalized shall be charged to construction and retirement activities either directly or by transfers from this account to the applicable construction and retirement work orders.

NOTE C: The cost of insurance or reserve accruals applicable to the various utility functions shall be charged to the specific functional operations and the appropropriate miscellaneous administrative expense accounts either directly or by transfers from this account.

NOTE D: Exclude herefrom the time and expenses of employees (except those engaged in injuries and damages activities) spent in attendance at safety and accident prevention educational meetings, if occurring during the regular work period.

NOTE E: The cost of labor, employee pensions and benefits, social security and other payroll taxes, and the related supplies and expenses of administrative and general employees who are only incidentally engaged in injuries and damages activities, may be included in Account 920 and Account 921, as appropriate.

926 Employee Pensions and Benefits

A. This account shall include pensions paid to or on behalf of retired employees or accruals to provide for pensions or payments for the purchase of annuities for this purpose, when the utility has definitely, by contract, committed itself to a pension plan under which the pension funds are irrevocably devoted to pension purposes and payments for employee accident, sickness, hospital, and death benefits, or insurance therefor. Include, also, expenses incurred in medical, educational, or recreational activities for the benefit of employees and administrative expenses in connection with employee pensions and benefits.

B. The utility shall maintain a complete record of accruals or payments for pensions and be prepared to furnish full information to RUS of the plan under which it has created or proposes to create a pension fund and a copy of the declaration of trust or resolution under which the pension plan is established.

C. There shall be credited to this account, the portion of pensions and benefits expenses which is applicable to nonutility operations, the specific functional operations, maintenance, and administrative expense accounts, and to construction and retirement activities unless such amounts are distributed directly to the accounts involved and are not included herein in the first instance.

D. Records in support of this account shall be so kept that the total pensions expense, the total benefits expense, the administrative expenses included herein, and the amounts of pensions and benefits expenses transferred to the operations, maintenance, administrative, construction or retirement accounts will be readily available.

Items

1. Payment of pensions to retirees on a nonaccrual basis.
2. Accruals for or payments to pension funds or to insurance companies for pension purposes.
3. Group and life insurance premiums (credit dividends received).
4. Payments for medical and hospital services and expenses of employees when not the result of occupational injuries.
5. Payments for accident, sickness, hospital, and death benefits or insurance.
6. Payments to employees incapacitated for service or on leave of absence beyond periods normally allowed when not the result of occupational injuries or in excess of statutory awards.
7. Expenses in connection with educational and recreational activities for the benefit of employees.

NOTE A: The cost of labor, employee pensions and benefits, social security and other payroll taxes, injuries and damages, and the related supplies and expenses of administrative and general employees who are only incidentally engaged in employee pension and benefit activities may be included in Account 920 and Account 921, as appropriate.

NOTE B: Salaries paid to employees during periods of nonoccupational sickness may be

charged to the appropriate labor account rather than to employee benefits.

927 Franchise Requirements

A. This account shall include payments to municipal or other governmental authorities and the cost of materials, supplies, and services furnished such authorities without reimbursement in compliance with franchise, ordinance, or similar requirements; provided, however, that the utility may charge to this account at regular tariff rates, instead of cost, utility service furnished without charge under provisions of franchises.

B. When no direct outlay is involved, concurrent credit for such charges shall be made to Account 929, Duplicate Charges—Credit.

C. The account shall be maintained so as to readily reflect the amounts of cash outlays, utility service supplied without charge, and other items furnished without charge.

NOTE A: Franchise taxes shall not be charged to this account, but to Account 408.1, Taxes Other Than Income Taxes, Utility Operating Income.

NOTE B: Any amount paid as initial consideration for a franchise running for more than one year shall be charged to Account 302, Franchises and Consents.

928 Regulatory Commission Expenses

A. This account shall include all expense (except pay of regular employees only incidentally engaged in such work) properly includible in utility operating expenses, incurred by the utility in connection with formal cases before regulatory commissions or other regulatory bodies or cases in which such a body is a party, including payments made to a regulatory commission for fees assessed against the utility for pay and expenses of such commission, its officers, agents, and employees, and also including payments made to the United States for the administration of the Federal Power Act.

B. Amounts of regulatory commission expenses which, by approval or direction of RUS, are to be spread over future periods shall be charged to Account 182.3, Other Regulatory Assets, and amortized by charges to this account.

C. The utility shall be prepared to show the cost of each formal case.

Items

1. Salaries, fees, retainers, and expenses of counsel, solicitors, attorneys, accountants, engineers, clerks, attendants, witnesses, and others engaged in the prosecution of or defence against petitions or complaints presented to regulatory bodies or in the valuation of property owned or used by the utility in connection with such cases.

2. Office supplies and expenses, payments to public service or other regulatory commissions, stationery and printing, traveling expenses, and other expenses incurred directly in connection with formal cases before regulatory commissions.

NOTE A: Exclude from this account and include in other appropriate operating expense accounts, expenses incurred in the improvement of service, additional inspection, or rendering reports which are made necessary by the rules and regulations, or orders, of regulatory bodies.

NOTE B: Do not include in this account amounts includible in Account 302, Franchises and Consents; Account 181, Unamortized Debt Expense; or Account 214, Capital Stock Expense.

929 Duplicate Charges—Credit

This account shall include concurrent credits for charges which may be made to operating expenses or to other accounts for the use of utility service from its own supply. Include, also, offsetting credits for any other charges made to operating expenses for which there is no direct money outlay.

930.1 General Advertising Expenses

This account shall include the cost of labor, employee pensions and benefits, social security and other payroll taxes, injuries and damages, materials used, and expenses incurred in advertising and related activities, the cost of which by their content and purpose are not provided for elsewhere.

Items

Labor:

1. Supervision.
2. Preparing advertising material for newspapers, periodicals, and billboards and preparing or conducting motion pictures, radio, and television programs.
3. Preparing booklets and bulletins used in direct mail advertising.
4. Preparing window and other displays.
5. Clerical and stenographic work.
6. Investigating and employing advertising agencies, selecting media, and conducting negotiations in connection with the placement and subject matter of advertising.

Taxes:

1. Federal and state unemployment.
2. F.I.C.A.

Employee Pensions and Benefits: The portion of employee pensions and benefits specifically identifiable with employees' labor costs charged herein or, in the absence of specific employee identification, the portion of employee pensions and benefits, allocated on the more equitable basis of either direct labor dollars or direct labor hours, applicable to the labor items detailed above, including:

1. Accruals for or payments to pension funds or to insurance companies for pension purposes.
2. Group and life insurance premiums (credit dividends received).
3. Payments for medical and hospital services and expenses of employees when not the result of occupational injuries.
4. Payments for accident, sickness, hospital, and death benefits or insurance.
5. Payments to employees incapacitated for service or on leave of absence beyond periods normally allowed when not the result of occupational injuries or in excess of statutory awards.
6. Expenses in connection with educational and recreational activities for the benefit of employees.

Insurance:

1. Premiums payable to insurance companies for protection against claims from injuries and damages by employees or others, such as public liability, property damages, casualty, employee liability, etc., and amounts credited to Account 228.2, Accumulated Provision for Injuries and Damage, for similar protection.
2. Losses not covered by insurance or reserve accruals on account of injuries or deaths to employees or others and damages to the property of others.
3. Fees and expenses of claim investigators.
4. Payment of awards to claimants for court costs and attorneys' services.
5. Medical and hospital service and expenses for employees as the result of occupational injuries or resulting from claims of others.
6. Compensation payments under workmen's compensation laws.
7. Compensation paid while incapacitated as the result of occupational injuries. (See Account 924, Note A.)
8. Cost of safety, accident prevention, and similar educational activities.

Materials and Expenses:

1. Advertising in newspapers, periodicals, billboards, and radios.
2. Advertising matter such as posters, bulletins, booklets, and related items.
3. Fees and expenses of advertising agencies and commercial artists.
4. Postage and direct mail advertising.
5. Printing of booklets, dodgers, and bulletins.
6. Supplies and expenses in preparing advertising materials.
7. Office supplies and expenses.

NOTE A: Properly includible in this account is the cost of advertising activities on a local or national basis of a goodwill or institutional nature, which is primarily designed to improve the image of the utility or the industry, including advertisements which inform the public concerning matters affecting the company's operations, such as, the cost of providing service, the company's efforts to improve the quality of service, and the company's efforts to improve and protect the environment. Entries relating to advertising included in this account shall contain or refer to supporting documents which identify the specific advertising message. If references are used, copies of the advertising message shall be readily available.

NOTE B: Exclude from this account and include in Account 426.4, Expenditures for Certain Civic, Political and Related Activities, expenses for advertising activities, which are designed to solicit public support or the support of public officials in matters of a political nature.

930.2 Miscellaneous General Expenses

This account shall include the cost of labor, employee pensions and benefits, social security and other payroll taxes, injuries and damages, property insurance, property taxes, and expenses incurred in connection with the general management of the utility not provided for elsewhere.

Items

Labor:

1. Miscellaneous labor not elsewhere provided for.

Taxes:

1. Federal and state unemployment.
2. F.I.C.A.
3. Property.

Employee Pensions and Benefits: The portion of employee pensions and benefits specifically identifiable with employees' labor costs charged herein or, in the absence of specific employee identification, the portion of employee pensions and benefits, allocated on the more equitable basis of either direct labor dollars or direct labor hours, applicable to the labor items detailed above, including:

1. Accruals for or payments to pension funds or to insurance companies for pension purposes.
2. Group and life insurance premiums (credit dividends received).
3. Payments for medical and hospital services and expenses of employees when not the result of occupational injuries.
4. Payments for accident, sickness, hospital, and death benefits or insurance.
5. Payments to employees incapacitated for service or on leave of absence beyond periods normally allowed when not the result of occupational injuries or in excess of statutory awards.
6. Expenses in connection with educational and recreational activities for the benefit of employees.

Insurance:

1. Premiums payable to insurance companies for fire, storm, burglary, boiler explosion, lightning, fidelity, riot, and similar insurance.
2. Amounts credited to Account 228.1, Accumulated Provision for Property Insurance, for similar protection.
3. Special costs incurred in procuring insurance.
4. Insurance inspection service.
5. Insurance counsel, brokerage fees, and expenses.
6. Premiums payable to insurance companies for protection against claims from injuries and damages by employees or others, such as public liability, property damages, casualty, employee liability, etc., and amounts credited to Account 228.2, Accumulated Provision for Injuries and Damage, for similar protection.
7. Losses not covered by insurance or reserve accruals on account of injuries or deaths to employees or others and damages to the property of others.
8. Fees and expenses of claim investigators.
9. Payment of awards to claimants for court costs and attorneys' services.
10. Medical and hospital service and expenses for employees as the result of occupational injuries or resulting from claims of others.
11. Compensation payments under workmen's compensation laws.
12. Compensation paid while incapacitated as the result of occupational injuries. (See Account 924, Note A.)
13. Cost of safety, accident prevention, and similar educational activities.

Expenses:

1. Industry association dues for company memberships.
2. Contributions for conventions and meetings of the industry.
3. Research, development, and demonstration expenses not charged to other operation and maintenance expense accounts on a functional basis.
4. Communication service not chargeable to other accounts.
5. Trustee, registrar, and transfer agent fees and expenses.
6. Stockholders meeting expenses.
7. Dividend and other financial notices.
8. Printing and mailing dividend checks.
9. Directors' fees and expenses.
10. Publishing and distributing annual reports to stockholders.
11. Public notices of financial, operating, and other data required by regulatory statutes, not including, however, notices required in connection

with security issues or acquisitions of property.

931 Rents

This account shall include rents properly includible in utility operating expenses for the property of others used, occupied, or operated in connection with the customer accounts, customer service and informational, sales, general, and administrative functions of the utility. (See § 1767.17 (c).)

(Maintenance)

935 Maintenance of General Plant

A. This account shall include the cost assignable to customer accounts, sales, administrative, and general functions of labor, employee pensions and benefits, social security and other payroll taxes, injuries and damages, materials used, and expenses incurred in the maintenance of property, the book cost of which is includible in Account 390, Structures and Improvements; Account 391, Office Furniture and Equipment; Account 397, Communication Equipment; and Account 398, Miscellaneous Equipment. (See § 1767.17(b).)

B. Maintenance expenses on office furniture and equipment used elsewhere than in general, commercial, and sales offices shall be charged to the following accounts:

1. Steam Power Generation, Account 514.
2. Nuclear Power Generation, Account 532.
3. Hydraulic Power Generation, Account 545.
4. Other Power Generation, Account 554.
5. Transmission, Account 573.
6. Distribution, Account 598.
7. Merchandise and Jobbing, Account 416.
8. Garages, Shops, etc., Appropriate clearing account, if used.

NOTE: Maintenance of plant included in other general equipment accounts shall be included herein unless charged to clearing accounts or to the particular functional maintenance expense account indicated by the use of the equipment.

[58 FR 59825, Nov. 10, 1993, as amended at 62 FR 42317, Aug. 6, 1997]

§§ 1767.32—1767.40 [Reserved]

§ 1767.41 Accounting methods and procedures required of all RUS borrowers.

All RUS borrowers shall maintain and keep their books of accounts and all other books and records which support the entries in such books of accounts in accordance with the accounting principles prescribed in this section. Interpretations Nos. 133, 134, 137, 403, 404, 602, 606, 618, 627, 628, and 629 adopt and implement the provisions of standards issued by the Financial Accounting Standards Board (FASB). Each interpretation includes a synopsis of the requirements of the standard as well as specific accounting requirements and interpretations required by RUS. The synopsis provides general information to assist borrowers in determining whether the standard applies to an individual cooperative's operations. The synopsis is not intended to change the requirements of the FASB standards unless it is set forth in the section entitled RUS Accounting Requirements in each interpretation. If a particular borrower believes a conflict exists between the FASB standard and an RUS interpretation, the borrower shall contact the Director, PASD, to seek resolution of the issue.

Numerical Index

Number	Title
101	Work Order Procedures
102	Line Conversion
103	Sacrificial Anodes and the Replacement of a Neutral
104	Terminal Facilities
105	Pole Top Disconnect Switch
106	Steel Pole Reinforcers
107	Mobile Substations
108	Security Lights
109	Joint Use
110	First Clearing and Grading of Land and Rights of Way
111	Engineering Contracts for System Planning
112	Determination of Availability of Service
113	Temporary Facilities (Services)
114	Construction Work-in-Progress Damaged or Destroyed by Storm

Numerical Index—Continued

Number	Title
115	Liquidated Damages
116	Nonrefundable Payments for Construction
117	Refunds of Overpayments for Materials and Equipment
118	Load Control Equipment
119	Special Equipment
120	Meter Sockets and Meters
121	Minimum—Maximum Voltmeters
122	Retrofitting Demand Meters
123	Transformer Conversions
124	Transclosures
125	Retirement Units
126	Establishment of Continuing Property Records
127	Continuing Property Records for Buildings
128	Sale of Property
129	Gain or Loss on the Sale of an Office Building
130	Salvage and Obsolete Material
131	Plant Acquisition Adjustments
132	General Plant
133	Plant Abandonments and Disallowances of Plant Costs
134	Utility Plant Phase-in Plans
135	Accounting for Removal or Relocation of Electric Facilities Resulting from the Action of Others
136	Storm Damage
137	Impairment of Long-Lived Assets.
138	Automatic Meter Reading Systems-Turtles.
139	Global Positioning Systems.
140	Radio-Based Automatic Meter Reading Systems.
201	Supplemental Financing
301	Forfeited Customers' Deposits
401	Computer Software Costs
402	Legal Expenses
403	Leases
404	Consolidated Financial Statements
501	Patronage Capital Assignments
502	Patronage Capital Retirements
503	Operating and Nonoperating Margins
504	Patronage Capital from G&T Cooperatives
505	Patronage Capital Furnished by Other Cooperative Service Organizations

Numerical Index—Continued

Number	Title
506	Forfeited Membership Fees
601	Employee Benefits
602	Compensated Absences
603	Employee Retirement and Group Insurance
604	Deferred Compensation
605	Life Insurance Premium on Life of a Borrower Employee
606	Pension Costs
607	Unproductive Time
608	Training Costs, Attendance at Meetings, etc.
609	Maintenance and Operations
610	Financial Forecast
611	Advertising Expense
612	Special Power Cost Study
613	Mapping Costs
614	Member Relations Costs
615	Statewide Fees
616	Power Supply/Distribution Cooperative Borrowings
617	Rate Discount Allowed by the Power Cooperative to Distribution Cooperative Owning Connecting Transmission Lines
618	Theft Losses not Covered by Insurance
619	Self Billing
620	Purchase Rebates
621	Integrity Fund
622	In-Substance Defeasance
623	Satellite or Cable Television Services
624	Pollution Control Bonds
625	Prepayment of Debt
626	Rural Economic Development Loan and Grant Program
627	Postretirement Benefits
628	Postemployment Benefits
629	Investments in Debt and Equity Securities
630	Split Dollar Life Insurance.
631	Special Early Retirement Plan.

Subject Matter Index

	Number
A	
Abandonments—Plant	133
Acquisition Adjustments—Plant	131
Advertising Expenses	611

Subject Matter Index—Continued

	Number
Assignments—Patronage Capital	501
Attendance at Meetings	608
Automatic Meter Reading Systems—Radio-Based	140
Automatic Meter Reading Systems—Turtles	138
Availability of Service—Determination of	112
B	
Benefits—Employee	601
Bonds—Pollution Control	624
Borrowing—Power Supply Cooperative/Distribution Cooperative	616
Buildings—Continuing Property Records	127
Buildings, Office—Gain or Loss on Sale of	129
C	
Cable Television Services	623
Capital Credits—Assignment	501
Capital Credits—G&T Cooperative	504
Capital Credits—Other Service Cooperatives	505
Capital Credits—Retirement	502
Compensated Absences	602
Computer Software Costs	401
Consolidated Financial Statements	404
Construction Work in Progress Damaged or Destroyed by Storm	114
Continuing Property Records—Buildings	127
Continuing Property Records—Establishment of	126
Contributions—Nonrefundable	116
Conversion—Line	102
Conversion—Transformer	123
Customers' Deposits—Forfeited	301
D	
Damaged or Destroyed Construction Work in Progress	114
Damages—Liquidated	115
Debt—Prepayment of	625
Debt Securities—Investments in	629
Deferred Compensation	604
Demand Meters—Retrofitting	122
Determination of Availability of Service	113
Disallowances of Plant Costs	133
Disconnect Switch—Pole Top	105
Discounts Allowed by Power Cooperative to Distribution Cooperative Owning Transmission Lines	617
Distribution Cooperative/Power Supply Cooperative Borrowing	616
E	
Early Retirement Plan	631.
Economic Development Loan and Grant Program	626
Employee Benefits	601
Equity Securities—Investments in	629
F	
Fees—Statewide	615
Financial Forecast	610
Financial Statements—Consolidated	404
Financing—Supplemental	201
First Clearing and Grading of Land and Rights of Way	110
Forfeited Customer Deposits	301
Forfeited Membership Fees	506
G	
Gain or Loss on Sale of Office Building	129
General Plant	132
Generation and Transmission (G&T) Capital Credits	504
Global Positioning Systems	139.
I	
Impairment of Long-Lived Assets	137.
In-substance Defeasance	622
Insurance—Employee Retirement and Group	603
Insurance—Premium on Life of a Borrower Employee	605
Insurance—Split Dollar	630.
Integrity Fund	621
Investments in Debt and Equity Securities	629
J	
Joint Use	109
L	
Land—First Clearing and Grading	110
Leases	403
Legal Expenses	402
Life Insurance Premiums on Life of a Borrower Employee	605

Subject Matter Index—Continued

	Number
Life Insurance—Split Dollar	630.
Line Conversion	102
Line Relocations	135
Liquidated Damages	115
Load Control Equipment	118
Long-Lived Assets-Impairment	137.
M	
Maintenance and Operations	609
Mapping Costs	613
Margins—Operating and Nonoperating	503
Material—Salvage and Obsolete	130
Materials and Supplies—Refund for Overpayments	117
Member Relation Costs	614
Membership Fees—Forfeited	506
Meter Reading Systems—Radio-Based	140.
Meter Reading Systems—Turtles	138.
Meter Sockets and Meters	120
Minimum—Maximum Voltmeters	121
Mobile Substations	107
N	
Neutral—Replacement of	103
Nonoperating Margins	503
Nonrefundable Payments for Construction	116
O	
Obsolete Material	130
Operating and Nonoperating Margins	503
Operations Costs	609
P	
Patronage Capital Assignments	501
Patronage Capital Furnished by Other Cooperative Service Organizations	505
Patronage Capital from G&T Cooperatives	504
Patronage Capital Retirements	502
Payments for Construction—Nonrefundable	116
Pension Costs	606
Phase-in Plans	134
Plant Abandonments	133
Plant Acquisition Adjustments	131
Plant Costs—Disallowances	133
Plant—General	132
Pole Reinforcers—Steel	106
Pole Top Disconnect Switch	105
Pollution Control Bonds	624
Postemployment Benefits	628
Postretirement Benefits	627
Power Cost Study	612
Power Supply/Distribution Cooperative Borrowing	616
Prepayment of Debt	625
Property—Sale of	128
Purchase Rebates	620
R	
Radio-Based Automatic Meter Reading Systems	140.
Rate Discount Allowed by Power Cooperative to a Distribution Cooperative Owning Transmission Lines	617
Rebates—Purchase	620
Refunds for Overpayments for Materials and Supplies	117
Reimbursement for Line Relocations	135
Relocations of Lines	135
Replacement of a Neutral	103
Retirement Units	125
Retirements—Patronage Capital	502
Retrofitting Demand Meters	122
Rights of Way—First Clearing and Grading	110
Rural Economic Development Loan and Grant Program	626
S	
Sacrificial Anodes and the Replacement of a Neutral	103
Sale of an Office Building	129
Sale of Property	128
Salvage and Obsolete Material	130
Satellite Television Services	623
Securities—Investments in Debt and Equity	136
Security Lights	108
Self Billing	619
Software Costs	401
Special Early Retirement Plan	631.
Special Equipment	119
Special Power Cost Study	612
Split Dollar Life Insurance	630.
Statewide Fees	615
Steel Pole Reinforcers	106
Storm Damage	136
Substation—Mobile	107
Supplemental Financing	201
System Planning—Engineering Contracts	111
T	
Temporary Facilities (Services)	113

Subject Matter Index—Continued

	Number
Terminal Facilities	104
Theft Losses not Covered by Insurance	618
Training Costs, Attendance at Meetings, etc.	608
Transclosures	124
Transformer Conversions	123
Turtles—Automatic Meter Reading Systems	138.
U	
Unproductive Time	607
V	
Voltmeters—Minimum/Maximum	121
W	
Work Order Procedures	101

101 Work Order Procedures

When a minor item of property is removed from service and not replaced, a retirement work order is not required except in the case of a conductor. The cost of the minor item shall remain in the appropriate plant account until the retirement unit, of which it is a part, is retired. However, as conductor is recorded in feet and is not part of any specific retirement unit, conductor shall be retired even though the amount taken down and not replaced is less than a retirement unit (two spans).

When minor items of plant are removed and not replaced, material salvaged shall be recorded on a material salvage ticket. Items of material recorded on this ticket shall be charged to the materials and supplies account and credited in the miscellaneous columns of the Materials Register to the Accumulated Provision for Depreciation. In this example, it is assumed that the cost of removal is nil. If, however, costs are incurred during the removal of minor items of plant, these costs shall reduce the credit to the Accumulated Provision for Depreciation.

When a staking sheet supporting a single work order reflects a combination of new construction and replacements, or system improvements, the predominant cost shall be the governing factor in determining the amount of cost RUS will finance. To illustrate, assume that a service is to be run to a new home near the end of an existing line. On inspection, the pole from which the service is to be run is found to be in very poor physical condition and must be replaced. In addition, a single span of wire and a service are presently connected to this pole which serve no purpose. The home originally served has been demolished and the existing span, pole, and service were retired. In other words, what started out to be simply the installation of a new service now includes the retirement of a span of wire, a pole, and a service; the replacement of a pole; and the running of a new service. Assuming the replacement of the pole is the costliest part of this project, the construction and retirement activity shall be classified as an ordinary replacement even though the work includes new construction and retirements without replacement.

102 Line Conversion

If it is necessary to move a conductor from one location to another on a pole assembly during the conversion of a line from one phase to another phase, the cost of moving the conductor is capitalizable as a system improvement.

103 Sacrificial Anodes and the Replacement of a Neutral

Many utilities conduct studies to determine whether sacrificial anodes are needed to protect underground cable against corrosion. The following procedures shall be followed to account for sacrificial anodes and the replacement of a neutral:

1. If the study results in the installation of sacrificial anodes, the cost of the study shall be capitalized to Account 367, Underground Conductors and Devices. If the study does not result in the installation of anodes, the cost shall be charged to Account 594, Maintenance of Underground Lines.

2. Costs incurred in the first installation are capitalizable even though anodes are considered minor items of property. However, only the first costs of installation shall be capitalized. All subsequent replacements of anodes shall be expensed.

3. Sacrificial anodes do not constitute a record unit; therefore, the cost of anodes shall be added to the cost of the underground cable unit.

4. Because a neutral is part of an underground cable record unit, and is not, in and of itself, a record unit, the cost to replace a corroded neutral shall be charged to Account 594, Maintenance of Underground Lines.

104 Terminal Facilities

Borrowers are sometimes required to construct terminal facilities in the transmission line of another utility in order to receive power from their power supplier. The document executed between the borrower and the utility is normally referred to as a ''License Agreement''. The license agreement may stipulate that certain items of the terminal facilities are to be transferred to, and become the property of, the other utility upon completion of the construction. The accounting for this type of transaction shall be as follows:

1. All construction costs incurred shall be charged to a work order. Upon completion of the construction and accumulation of all costs, the cost of the facilities that become the property of another utility shall be transferred from construction work-in-progress to Account 303, Miscellaneous Intangible Plant. The cost of the plant for which the borrower retains title shall be charged to the appropriate plant accounts.

2. The cost of the facilities recorded in Account 303 shall be amortized to Account 405, Amortization of Other Electric Plant, over the contract term or the estimated useful service life of the plant, whichever is shorter. If the related contract or contracts for this power supply are terminated, the unamortized balance shall be expensed, in the current period, in Account 557.

105 Pole Top Disconnect Switch

The installation of pole top service disconnect switches, where title is retained by the utility, shall be capitalized in Account 371, Installations on Customers' Premises. If a switch cabinet is purchased with a current transformer included as an integral part of the cabinet, the entire cost of the switch shall be charged to Account 371. If the current transformer is installed outside of the switch cabinet, the transformer, meter, and meter base, together with the first installation costs, shall be capitalized, upon purchase, in Account 370, Meters.

Payments received from the customer toward construction costs shall be credited to Account 371, Installations on Customers' Premises. Such payments, together with any amount not financed by RUS, shall be entered in column 9 of the RUS Form 219, Inventory of Work Orders. The associated maintenance costs shall be charged to Account 587, Customer Installations Expenses, or to Account 597, Maintenance of Meters, as appropriate.

When pole top disconnect switches are installed and title is held by the customer, the cost of the material shall be charged to Account 456, Other Electric Revenues and the receipts from the sale of line material shall be credited to Account 456. The portion of the receipts for resale material as well as that for installation shall be credited to Account 415, Revenues from Merchandising, Jobbing, and Contract Work. The cost of resale material sold and the cost of installation shall be charged to Account 416, Costs and Expenses of Merchandising, Jobbing and Contract Work.

Future maintenance costs incurred by the cooperative that are not billed to the customer shall be charged to Account 587, Customer Installations Expenses.

106 Steel Pole Reinforcers

The cost associated with the purchase and installation of steel pole reinforcers shall be charged to Account 593, Maintenance of Overhead Lines.

107 Mobile Substations

Mobile substations shall be accounted for in a manner similar to that for a spare and are, therefore, included as part of transmission or distribution station equipment, depending upon the use of the mobile substation. The mobile substation, together with the trailer on which it is permanently mounted, shall be capitalized upon purchase. A general purpose truck or tractor used to relocate a mobile substation and

trailer shall be classified as transportation equipment.

The composite depreciation rate used for transmission plant or distribution plant, as appropriate, shall be applied to the mobile substation.

108 Security Lights

Where a pole supports both a secondary wire and a security light, the cost of the pole shall be charged to Account 364, Poles, Towers, and Fixtures, even though the plant investment in security lights is recorded in Account 371, Installations on Customers' Premises.

109 Joint Use

There are many cases in which an electric utility and a communications utility enter into an agreement that provides for joint use of poles. Under the terms of these agreements, either utility may occupy the poles of the other upon payment of a stipulated annual rental. If such joint occupancy necessitates the use of a higher than standard pole, the new pole shall be provided at the expense of the utility having the need for the higher pole.

When an electric utility replaces, at its own expense, a standard pole belonging to the communications utility with a higher pole, the cost of the higher pole, less net salvage (if any) of the pole replaced, shall be charged to the account in which the pole rental is included.

Contributions made to an electric utility by a communications utility for the costs incurred in stubbing joint use electric poles shall be credited to Account 593, Maintenance of Overhead Lines. The cost of pole stubbing on electric plant distribution facilities shall be charged to Account 593.

An investment in outside plant that is held in joint ownership shall be recorded in the appropriate plant accounts at its cost to the utility. For continuing property record purposes, jointly owned property units shall be priced at their cost to the utility and shall be appropriately segregated in the CPRs to indicate joint ownership.

110 First Clearing and Grading of Land and Rights of Way

Utility accounting practice requires the costs associated with the first clearing and grading of land and rights of way and any resulting damage thereto, to be included in the accounts for structures and improvements or equipment to which such costs relate. Since the first clearing, as well as clearing which is ''directly occasioned by the building of a structure,'' is done, not for the purpose of enhancing the value of the land or the rights of way, but for the purpose of constructing plant, these costs are more directly related to the construction of plant than to the purchase of land or rights of way. The accounts shall be charged as follows:

1. For overhead transmission pole lines, Account 356, Overhead Conductors and Devices;

2. For overhead distribution lines, Account 365, Overhead Conductors and Devices; and

3. For underground distribution lines, Account 366, Underground Conduit, for a conduit installation; or Account 367, Underground Conductors and Devices, for a direct burial installation.

111 Engineering Contracts for System Planning

Engineering costs for long-range system plans shall be charged to Account 183, Preliminary Survey and Investigation Charges, as incurred. The cost of engineering services incurred in preparing a long-range system plan represents a legitimate component of the total cost of construction of all system improvements detailed in the plan. The amount of engineering costs to be associated with any specific system improvement is the annual costs incurred up to the time of the allocation (not previously allocated), plus that portion of the initial cost which relates to the particular construction in question. If any major system improvement included in the engineering plan is not constructed, or if the study is superseded by another complete study, the cost of that portion of the original study not resulting in construction

shall be charged to Account 182.2, Unrecovered Plant and Regulatory Study Costs, if the costs are to be recovered through future rates. Costs recorded in Account 182.2 shall be amortized to Account 407, Amortization of Property Losses, Unrecovered Plant and Regulatory Study Costs, as the costs are recovered through the rates. Any costs included in Account 182.2 that are disallowed for rate-making purposes shall be charged to Account 426.5, Other Deductions.

The allocation of engineering services to the various construction projects requires the exercise of judgment. In some cases, system improvements are continuous over a period of months or years, thus permitting the engineering cost to be spread monthly as overhead in relation to the direct costs incurred in construction. (If a substantial amount of retirement work is performed in connection with system improvements, a proportionate share of the engineering cost shall be allocated on the basis of direct retirement labor.) If the system improvements detailed in the plan are not performed in a continuous manner, the engineering cost shall be allocated on the basis of the estimated costs of the various larger system improvement projects which result from the long-range plan.

If construction is performed by contract, the engineering cost applicable thereto shall be transferred from Account 183 to Account 107, Construction Work-in-Progress—Electric, and thereby spread to the appropriate plant accounts on the basis of contract costs.

In the case of system improvement construction performed on the basis of work orders, engineering costs shall be transferred to Account 107, Construction Work-in-Progress—Electric, and included in total work order costs as either overhead or special services. If engineering services are not readily identifiable with individual work orders, they shall be capitalized as overhead. If engineering costs for each work order are readily separable from the engineering costs for all other work orders, they shall be capitalized as special services.

In summarizing system improvement work orders on the RUS Form 219, Inventory of Work Orders, the amount of engineering costs previously approved for advance on the long range plan, if any, shall be deducted to determine the balance of loan funds subject to advance by RUS.

112 Determination of Availability of Service

Costs relating to the determination of availability of service, rates, and similar items for individual applicants shall be charged to Account 912, Demonstrating and Selling Expenses. If it is expected that construction will result, the costs incurred to provide service, including staking, shall be charged to Account 107, Construction Work-in-Progress—Electric. If construction does not result, Account 107 shall be credited and Account 426.5, Other Deductions, shall be charged.

113 Temporary Facilities (Services)

Plant installed for temporary use, a period of less than 1.ar, shall be recorded in Account 185, Temporary Facilities, net of any payments received from customers. Upon retirement, this net cost plus cost of removal, less any salvage value, shall be cleared to Account 451, Miscellaneous Service Revenues.

When a temporary service is installed at the site of a building under construction, the location of the permanent service entrance and the load and its characteristics are usually known. The temporary service is of the proper capacity and is so located or has sufficient slack, that it can be relocated to serve the new building as a permanent service. Under these conditions, the service shall be charged to Account 369, Services, when first installed. The cost of moving and attaching the service to the permanent service entrance shall be charged to Account 593, Maintenance of Overhead Lines or Account 594, Maintenance of Underground Lines, as appropriate.

114 Construction Work-in-Progress Damaged or Destroyed by Storm

When installed plant, not yet completed or completed but not yet placed in service, has been damaged or destroyed by storm, the cost of the repair and restoration shall be added to the

cost of construction and capitalized if the plant was constructed under force account or work order construction, and the utility paid for the cost of the repairs. If the plant was constructed under contract, the contractor is required to deliver the plant in new condition. Therefore, any repairs required prior to the completion of construction and acceptance by the utility, are ordinarily borne by the contractor.

115 Liquidated Damages

Liquidated damages are amounts paid by or assessed against contractors for the completion of construction after an agreed upon date. Liquidated damages shall be credited to Account 107, Construction Work-in-Progress—Electric. Since these damages accrue during the construction period, they become one of the components of construction cost. Even though a portion of these damages may compensate the utility for costs which are not ''identifiable,'' no portion of the damages shall be credited to revenue or expense.

When a contractor has been paid in full from loan funds or from funds to be reimbursed by loan funds without a deduction for liquidated damages, the amount of liquidated damages received shall be deposited in the Construction Fund. This amount shall be reflected by a decrease in column 5, ''Total Expenditures to Date,'' of the RUS Form 595, Financial Requirement and Expenditure Statement, and as an increase in column 6, ''Cash Balance.'' If liquidated damages are obtained by withholding an equivalent amount from the contractor's payment, the net result will be the same.

116 Nonrefundable Payments for Construction

Nonrefundable payments (contributions) from customers and developers for underground construction shall first be credited to Account 107.2, Construction Work-in-Progress—Force Account. When the constructed plant is unitized and distributed to the individual plant accounts, the contributions shall be credited to those plant accounts which gave rise to the contribution.

When a customer or developer furnishes a trench or other service in connection with buried plant, the cooperative shall debit Account 107.2 with the actual or estimated cost of the service performed, and account for the credit as set forth above.

117 Refunds of Overpayments for Materials and Equipment

Refunds of overpayments for materials and equipment previously purchased are occasionally received as the result of legal action brought against electrical suppliers for price fixing in violation of antitrust laws. Such refunds shall be accounted for as follows:

1. The refund shall first be applied to any litigation costs that were incurred.
2. Refunds for special equipment items shall be accounted for, in detail, on the Summary of Special Equipment Costs and credited against the appropriate plant accounts.
3. Other material or equipment items that were installed through work orders or a materials furnished contract shall be adjusted on an amended work order. The amended work order shall include full details of the refund.
4. Continuing property records shall be adjusted to reflect the above transactions.
5. Amounts approved for advance on the RUS Form 595, Financial Requirement and Expenditure Statement, and on the loan budget records, shall be adjusted. For special equipment items, the adjustment shall be requested in a letter to RUS. For materials installed by work order or contract, the adjustments shall be made through credits shown on the RUS Form 219, Inventory of Work Orders.
6. Refunds for material currently in stock shall be credited to Account 154, Plant Materials and Operating Supplies.
7. If the material was used in maintenance activities or operations, the refund shall be credited to the appropriate maintenance or operations expense account.
8. Refunds for materials or equipment financed from loan funds shall be deposited in the Construction Fund—Trustee Account or remitted to RUS as a special payment on a note. Other refunds shall be deposited in the general funds.

118 Load Control Equipment

The primary purpose of a Load Management System is to optimize load dispatch and to reduce or minimize system peaks in order to reduce purchases of power or to delay or eliminate the need for construction of new plant. A Load Management System may be used on integrated systems, or on generation, transmission, or distribution systems separately. The telemetry equipment used for data acquisition and interpretation may be included at various points on a system, such as generation, transmission, or distribution substation, switchyards or on consumers' premises.

An effective load control program should be coordinated with the G&T and requires full participation of all member distribution systems. The G&T monitors the power load of the total member distribution system to predict the time of the system's peak load. An optimal load control strategy is developed by the G&T and is passed on from the G&T computer system to the load control computer systems of the member distribution cooperatives.

The equipment at the member distribution system level is the type actually being used by an integrated power system to operate a load control program. The equipment used may vary from one integrated power system to another. The selection of equipment used is determined by the information needs of the integrated power system, and the method selected to operate the load control system.

Some equipment performs only SCADA-type functions. This equipment is included with the equipment that performs only load control functions because SCADA-type equipment is an integral part of a load control program. An effective load control strategy requires current information on loads so that member distribution systems can determine the actual loads to be shed and the duration of the load control.

The function and location of the load control equipment are the primary factors in determining the account in which the equipment shall be recorded. The following example depicts a common load control system and the associated accounting. Equipment type may vary, thereby necessitating the use of accounts not prescribed below. In all instances, however, the function and location of the equipment shall dictate the appropriate account classification.

G&T Borrower

1. *Coordinating System Equipment*

Coordinating System Equipment is the data acquisition, processing and control hardware and software used to coordinate the load control efforts of the member distribution system. Generally, this equipment is dedicated to load control use and is not shared with other electric utility activities.

The purpose of the G&T load control computer system is to reduce or minimize the peak power requirements of the entire member distribution system. This involves load dispatching to control transmission circuits and breakers. The computer system for load control shall, therefore, be recorded in Account 353, Station Equipment, with the associated operating expenses recorded in Account 561, Load Dispatching, and maintenance expenses recorded in Account 570, Maintenance of Station Equipment.

2. *Coordinating System Communications Link*

The G&T load control computer system is usually linked to the load control computer system for each member distribution system by a radio or telephone link that is dedicated to that purpose and is not shared with other communication activities. Under such circumstances, communications equipment shall be classified in Account 353, Station Equipment. If the communications equipment is shared with general use or voice communications equipment, however, the equipment shall be classified in Account 397, Communication Equipment.

3. *Depreciation*

Load control equipment shall be recorded in separate subaccounts of the primary plant accounts detailed above and shall be depreciated based upon the owner's estimate of the equipment's useful service life.

Distribution Borrower

1. *Member System Equipment*

Member system equipment is the data acquisition, processing and control hardware and software used as a subset to the overall load control efforts by the integrated power system.

The member system computer for each distribution member system accepts the control strategy from the G&T coordinating system and develops the tables that determine the control loads that are to be shed and the duration of the load control. The member system computer for each distribution system monitors the usage at each of its delivery points. This usage data is then transmitted to the G&T coordinating system for use in developing load projects and evaluating control strategies for the integrated power system. The member system computer is generally dedicated to load control use and is not shared with other electric utility operations.

The member computer system shall be recorded in Account 362, Station Equipment. The associated operating expenses shall be recorded in Account 581, Load Dispatching, and maintenance expenses shall be recorded in Account 592, Maintenance of Station Equipment.

2. *Substation Remote Controllers*

Substation Remote Controllers are located at the distribution substation. They accept control signals from the member system computer and couple the signal to the portion of the distribution system to which it is connected. Substation Remote Controllers also serve as a receiver of inbound signals from transponders located in the distribution system. They also send data back to the member system computer.

Substation Remote Controllers shall be recorded in Account 362, Station Equipment. The associated operating expenses shall be recorded in Account 582, Station Expenses, and maintenance expenses shall be recorded in Account 592, Maintenance of Station Equipment.

3. *Substation Injection Units*

Substation Injection Units are used only in power line based systems and are located in distribution substations. A major function of the Substation Injection Unit is to receive load control signals from the member system computer and inject them into the power line based system to be transmitted to the Load Control Receivers. Substation Injection Units can also perform control and SCADA functions similar to those performed by Substation Remote Controllers.

Substation Injection Units shall be recorded in Account 362, Station Equipment. The associated operating expenses shall be recorded in Account 582, Station Expenses, and maintenance expenses shall be recorded in Account 592, Maintenance of Station Equipment.

4. *Remote Terminal Units*

Remote Terminal Units perform electric utility SCADA functions in a distribution substation or delivery point. These functions include monitoring equipment for abnormal operating conditions, monitoring analog quantities such as conductor voltage or substation load, and controlling of certain equipment within the substation.

Remote Terminal Units shall be recorded in Account 362, Station Equipment. The associated operating expenses shall be recorded in Account 582, Station Expenses, and maintenance expenses shall be recorded in Account 592, Maintenance of Station Equipment.

5. *Line Device Transponder*

A Line Device Transponder directly controls a piece of distribution apparatus, such as a voltage regulator or a power factor correction capacitor, located on a distribution feeder and not accessible to a Remote Terminal Unit. The Line Device Transponder actuates the control functions and reports back to the member system computer upon completion of the requested action. This transponder is located at the site of the distribution apparatus being controlled.

Line Device Transponders shall be recorded in Account 368, Line Transformers. The associated operating expense shall be recorded in Account 583, Overhead Line Expenses, or Account 584, Underground Line Expenses, as appropriate, and maintenance expenses shall be recorded in Account 595, Maintenance of Line Transformers.

6. *Communications Verification Transponders*

Communication Verification Transponders are used to respond to inquiries from Substation Remote Controllers. In power line based systems, these transponders are used to verify the performance of the communications system. They are also used during adverse system operations to isolate sections of the distribution system that are experiencing an outage.

Communication Verification Transponders shall be recorded in Account 362, Station Equipment. The associated operating expenses shall be recorded in Account 582, Station Expenses, and maintenance expenses shall be recorded in Account 592, Maintenance of Station Equipment.

7. *Load Control Receivers*

The Load Control Receiver, also known as a load control switch, is located at the site of the consumer's load. These receivers directly control the electric supply to an end-use appliance, such as an electric water heater, central air conditioning compressor, or irrigation pump. The amount of time that an appliance will be turned off by the load control receiver is preset. When the member system computer determines that load shedding is necessary, it sends a signal to the communication link which then sends signals directly to the Load Control Receivers. In a power line based system, the signal from the communications link is sent by radio or telephone line to the Substation Injection Units, which then signals the Load Control Receivers to shut down the appliances for the present time. In nonpower line based systems, the signal from the communications link is sent by radio directly to the Load Control Receivers.

Load Control Receivers are located on the consumer's side of the meter. When the member distribution system retains title to the Load Control Receivers and assumes full responsibility for maintenance and replacement of the equipment, it shall be classified in Account 371, Installations on Customer's Premises. Load Control Receivers that are donated or given to consumers shall be charged to Account 908, Customer Assistance Expenses.

Operating and maintenance expenses applicable to Load Control Receivers recorded in Account 371 shall be charged to Account 587, Customer Installations Expenses, and Account 598, Maintenance of Miscellaneous Distribution Plant, respectively. Expenses applicable to Load Control Receivers donated or given to consumers shall be recorded in Account 908, Customer Assistance Expenses.

Load Control Receivers may be moved on a continual basis from one customer location to another and are, therefore, considered to be special equipment items. When ownership is maintained by the member distribution cooperative, Load Control Receivers shall be accounted for in accordance with the special equipment procedures outlined in Accounting Interpretation No. 119 of this section.

8. *Communication Links*

The communication link in the member distribution systems between the Member System Computer, the Substation Remote Controllers or Substation Injection Units, Remote Terminal Units, Line Device Transponders, Communication Verification Transponders, and Load Control Receivers is usually accomplished by radio, telephone line, or power line based system. The communication links are normally dedicated to the SCADA and load control functions being served. Under such circumstances, communications equipment shall be recorded in Account 362, Station Equipment. If, however, the communication equipment used is shared with general use or voice communications equipment, the equipment shall be charged to Account 397, Communication Equipment.

9. *Depreciation*

Load control equipment shall be recorded in separate subaccounts of the primary plant accounts detailed above and shall be depreciated based upon the manufacturer's estimate of the equipment's useful service life.

119 Special Equipment

Special Equipment items are classified as such because they are continually being moved from one location to another due to load changes and maintenance practices. The USoA provides accounting that differs from that used for other types of materials. The cost, new, of special equipment items shall

be capitalized at the time of purchase; it shall not be charged to Account 154 as is the case with other materials. The first installation cost, as well as all incidental costs necessary to prepare the equipment for use, shall be capitalized with the material upon purchase. All subsequent costs of removing, resetting, changing, renewing oil, and repairing constitute operations and maintenance expenses. The capitalized cost of special equipment items, including the first installation, shall be removed from the electric plant accounts only when the items are abandoned or retired from the system.

Meters, line-type transformers, oil circuit reclosers, sectionalizers, current and potential transformers, meter sockets, and other metering equipment listed in Account 370, Meters, as well as pole-type and underground voltage regulators in Account 368, Line Transformers, are considered to be special equipment items. Similarly, load control receivers (load control switches) recorded in Account 371, Installations on Customers' Premises, are considered to be items of special equipment. (See Interpretation No. 118.) Transformers, voltage regulators, metering equipment, and current and potential transformers for substations are not.

Special equipment items which are classified as nonusable shall be segregated in the warehouse and retired from service. The Summary of Special Equipment Costs shall be retitled Summary of Special Equipment Costs Retired and used for this purpose. A journal entry reflecting this information shall be prepared and posted to the books. Since loan funds for special equipment, including first installation costs, are approved for advance by RUS upon receipt of the borrower's written estimate of funds required, and not on the basis of an Inventory of Work Orders, it is improper to take a credit for any salvage involved in the retirement of special equipment on the Inventory of Work Orders.

120 Meter Sockets and Meters

When a utility furnishes meter sockets, ownership by the utility of the meter socket or base, as well as the meter itself, is established by virtue of them being furnished without cost to the consumer by the cooperative. While no agreement as to ownership between the cooperative and the property owner exists, cooperative ownership is implied by long standing practice and tradition in the electric utility industry.

121 Minimum—Maximum Voltmeters

A minimum—maximum voltmeter is used to record the minimum and maximum voltages at a specific line location over a period of time. It is normally installed on a pole in connection with a 1½ kVA transformer, a meter base and connecting wires, and other small items of materials. Meter bases are ordinarily set for these voltmeters throughout the system, and a lesser number of voltmeters are rotated among them periodically to obtain voltage readings. An average system may have one voltmeter to two installations, with a maximum of 20 or 25 voltmeters for the whole system.

Minimum—maximum voltmeters shall be recorded, through work orders, in Account 370, Meters, when installed. The cost of the transformers shall remain in Account 368, Line Transformers, with the cost of the meter bases remaining in Account 370, Meters. The miscellaneous material used in installing the transformer and the meter base shall be charged to Account 370, Meters.

Maintenance expense shall be charged to either Account 595, Maintenance of Line Transformers, or Account 597, Maintenance of Meters, as appropriate. Costs associated with reading the voltmeters shall be charged to Account 583, Overhead Line Expenses, and the cost of relocating or changing the complete installation or any part thereof, other than retirement of the meter base, shall be charged to Account 583, Overhead Line Expenses, or Account 586, Meter Expenses.

122 Retrofitting Demand Meters

A demand meter measures the amount of electricity used over a period of time in kilowatt-hours (kWh) and indicates the maximum kilowatts (kW) required at any one time by means of a pointer.

Electronic or solid state demand meters have a direct readout which reads

kilowatt demand to two decimal places. The use of a direct readout demand meter may result in increased revenues as pointer readings tend to register lower than actual usages.

The process of retrofitting a demand meter replaces the pointer with a direct readout. The cost of such a replacement is usually expensed as a minor item of property; however, since the use of a direct readout results in a substantial betterment, the excess cost of the replacement over the estimated cost, at current prices, of replacing the pointer without the betterment is capitalized.

123 Transformer Conversions

The conversion of an overhead transformer to an underground transformer constitutes a betterment and shall, therefore, be capitalized.

124 Transclosures

Transclosures are enclosures or cabinets in which line transformers are mounted. The cost of transclosures that are purchased separately from the transformer shall be charged to Account 154, Plant Materials and Operating Supplies, when received, and capitalized, upon installation, to Account 368, Line Transformers, as a separate unit of property. If the case and the transformer are inseparable, the unit is considered a transformer and shall be capitalized upon purchase.

125 Retirement Units

Services

A retirement unit shall consist of a complete service rather than the individual wires comprising that service. If each separate wire of a service were treated as a retirement unit, the retirement unit would represent a comparatively small cost. Such a small unit of property would substantially increase the number of retirement work orders. The complete service shall, therefore, be considered a retirement unit.

Minor Items

When minor items of property are added separately from complete retirement units, the costs of these items shall be included in work orders, and by unitizing all costs of completed construction for a month, these minor items shall be spread to the retirement units of which they normally form a part. For example, to convert a two-phase line to a three-phase line requires the addition of a conductor, an insulator and a pole-top pin. A pole-top pin is typically capitalized as a component of the cost of the pole to which it is attached. Assuming this is the only work order for the month, the cost of this pin shall be charged to the conductor, so that its cost is included in the total cost of the project. In actual practice, however, this does not happen as it is normal to have a number of work orders for a given month, which include the setting of poles. In allocating the cost of all construction projects for the month, part of the cost of pole-top pins shall be allocated to poles even though the work orders on which they were capitalized did not include poles.

The retirement and replacement of isolated single retirement units cannot be charged to maintenance; a retirement and construction work order shall be used.

126 Establishment of Continuing Property Records

The costs of installing a system of continuing property records shall be charged to Account 930.2, Miscellaneous General Expenses, and may include:

1. Labor and expenses incurred in developing an inventory of property;
2. Labor and material costs incurred in connection with developing pole records including map preparation and pole cards; and
3. Labor and material costs (ledger sheets, etc.) incurred in connection with the installation of the record system.

127 Continuing Property Records for Buildings

When establishing continuing property records for a building where there is no detailed breakdown of contract costs, it is necessary to estimate the cost of the each component part. It should be noted that the establishment

of continuing property records is not required for buildings; however, if CPRs are not maintained, all repairs including the replacement of major component parts shall be expensed in the period incurred.

128 Sale of Property

All proceeds deposited in the Construction Fund account from the sale of property, regardless of materiality, shall be reflected on the RUS Form 595, Financial Requirement and Expenditure Statement. Proceeds from the sale of property shall be reported on the Form 595, by budget purpose, as a reduction in total expenditures to date, column 5; and an increase in the cash balance, column 6.

Proceeds from the sale of property shall not be used to maintain an ''Employee Fund.'' A utility may, pursuant to board policy, use general funds for employee welfare equivalent in amount to proceeds received from the sale of scrap property. If general funds, in an amount equivalent to proceeds received from the sale of scrap property, are used for employee welfare, Account 926, Employee Pensions and Benefits, shall be charged.

129 Gain or Loss on the Sale of an Office Building

A gain on the sale of an office building shall be recorded in Account 421.1, Gain on the Disposition of Property, with a loss recorded in Account 421.2, Loss on the Disposition of Property. If the gain or loss will materially distort current year's net margins, such gain or loss is reportable as an extraordinary item in Account 434, Extraordinary Income, or Account 435, Extraordinary Deductions.

130 Salvage and Obsolete Material

The value of material salvaged from the retirement of units of property reduces the loss on the retirement and shall be so applied. The value assigned to salvage shall be credited to Account 108.8, Retirement Work-in-Progress, which results in reducing net charges to the provision for depreciation when the work order is completed and cleared.

If salvage is sold, any difference between the realized value and the estimated value of the salvaged material shall be charged or credited to the appropriate provision for depreciation.

Salvage resulting from maintenance where no retirement units are involved shall be debited to the materials and supplies account, and credited to the appropriate maintenance account.

Occasionally a utility will have a loss due to obsolescence of materials on hand. If the loss is due to obsolescence of new material, the loss shall be charged to Account 426.5, Other Deductions. If the loss is due to obsolescence of used material, the loss shall be charged to the appropriate subaccount of Account 108, Accumulated Provision for Depreciation.

131 Plant Acquisition Adjustments

Plant acquisition adjustments shall be amortized to the operating expense accounts. These adjustments are recorded in Account 114, Electric Plant Acquisition Adjustments, and amortized to Account 406, Amortization of Electric Plant Acquisition Adjustments, or Account 425, Miscellaneous Amortization, as required by the regulatory commission having jurisdiction. Accounts 406 and 425 shall be closed to operating margins.

132 General Plant

When the unit method of depreciation is used for general plant items, gains and losses on sales, trades or disposals of equipment shall be recorded as such. If the composite method of depreciation is used, gains or losses on the disposal of general plant items shall be recorded in the appropriate depreciation reserve account.

A truck which is used only for transporting power operated equipment mounted thereon shall be charged, together with the installed equipment, to Account 396, Power Operated Equipment. If the same type of truck is used for transporting materials and supplies, tools and work equipment, personnel, or other items, the cost of the truck shall be charged to Account 392, Transportation Equipment.

Depreciation and other expenses relating to power operated equipment shall be accumulated in a subaccount

of Account 184, Clearing Accounts, and distributed monthly on an equitable basis to the accounts properly chargeable.

Depreciation expense on vehicles and other work equipment, furniture and office equipment, and other such plant used in the construction of utility plant, is a proper component of construction cost. To avoid a duplicate advance of funds, however, the amount of depreciation on such items that has previously been financed from loan funds shall be deducted from Inventories of Work Orders submitted to RUS. This amount shall be specifically identified, and shown either monthly or annually as a single item in column 9 on the RUS Form 219, Inventory of Work Orders.

133 Plant Abandonments and Disallowances of Plant Costs

In December 1986, the Financial Accounting Standards Board issued Statement of Financial Accounting Standards No. 90, Regulated Enterprises—Accounting for Abandonments (Statement No. 90) and Disallowances of Plant Costs. This section provides an overview of the requirements outlined in Statement No. 90 together with the specific accounts that shall be used to record a plant abandonment or a disallowance of plant costs.

Plant Abandonments

When an abandonment becomes probable, the cost of the abandoned asset shall be removed from Construction Work-in-Progress or Plant-in-Service, as applicable. Before making this transfer, however, a determination must be made as to whether recovery of the allowed cost is likely to be provided with a full return on the investment during the period from the time the abandonment becomes probable, to the time when recovery is completed, or with a partial or no return on the investment. This determination shall be made based upon the facts and circumstances of the specific abandonment, and past practices and current policies of regulatory jurisdiction.

If a full return on the investment is likely to be provided, any disallowance of all or part of the cost of abandoned plant that is both probable and reasonably estimated shall be recognized as a loss in the current year with the carrying basis of the asset reduced by an equal amount. The remaining cost of abandoned plant shall be recorded as a separate new asset.

If partial or no return on the investment is likely to be provided, any disallowance of abandoned plant costs that is both probable and reasonably estimated shall be recognized as a loss. The present value of the future revenues expected to be provided to recover the allowable cost of the abandoned plant and return on the investment, if any, shall be reported as a separate new asset. The discount rate used to compute the present value shall be the borrower's incremental borrowing rate, which is the rate that the borrower would have to pay to borrow an equivalent amount for a period equal to the expected recovery period. In determining the value of expected future revenues, the borrower shall consider the probable time period before the recovery is expected to begin and the probable time period over which recovery is expected to be provided.

The amount of the new asset shall be adjusted from time to time, as necessary, if new information indicates that the estimates used to record the new asset have changed. The carrying value of the new asset, however, shall not be adjusted for changes in the incremental borrowing rate. The amount of any adjustments shall be recorded as a gain or loss.

During the period between the date on which a new asset is recognized and the date on which recovery begins, the carrying amount shall be increased by accruing a carrying charge. The rate used to accrue the carrying charge shall be:

1. If a full return on the investment is likely, a rate equal to the allowed overall cost of capital in the jurisdiction in which recovery is expected to be provided shall be used.

2. If partial or no return is likely, the asset shall be amortized in a manner that will produce a constant return on the unamortized investment in the new asset equal to the rate at which the expected revenues were discounted.

Due to the nonprofit environment in which electric cooperatives operate,

full recovery of interest expense on plant related long-term debt equates to full recovery of the rate of return for an investor-owned utility. Therefore, if a cooperative is permitted full recovery of the interest expense incurred on the long-term debt borrowed to finance construction of an abandoned plant, no discounting of the asset is required nor is accrual of the carrying charge permitted.

If, at the time the provisions of Statement No. 90 are first applied, the borrower elects to restate the financial statements, the financial statements for all periods presented shall be restated and the financial statements shall disclose the nature of the restatement and its effect on margins before extraordinary items, net margins, and patronage capital at the beginning of the earliest period presented. If the borrower elects not to restate the financial statements, the effect of applying Statement No. 90 shall be reported as a change in accounting principle and the financial statements shall disclose the nature of the change and the effect of applying Statement No. 90 on margins before extraordinary items and net margins.

The specific accounts that shall be used to record transactions involving plant abandonments are as follows:

1. In the year of the abandonment, the unrecoverable portion of the cost of abandoned plant included in construction work-in-progress shall be recognized as a loss by a charge to Account 426.5, Other Deductions, and a credit to Account 107, Construction Work-in-Progress.

2. The balance of the cost remaining in the construction work-in-progress account shall be credited to Account 107 and charged to Account 182.2, Unrecovered Plant and Regulatory Study Costs.

3. The difference between the charge to Account 182.2 and the present value of expected future revenues for recovery of the new asset, shall be recorded as a credit to Account 182.2 and a debit to Account 426.5. The credit to Account 182.2 shall be segregated from the amount charged to Account 182.2 by the use of a separate subaccount. Statement No. 90 does not require this segregation; however, it is necessary under the USoA to provide for the appropriate segregation of operating and nonoperating income.

4. During the waiting period for recovery of the new asset to begin, carrying charges shall be accrued by a debit toAccount 182.2 with a concurrent credit to Account 421, Miscellaneous Nonoperating Income. Debits to Account 182.2 shall be treated as reductions to the credit subaccount of Account 182.2.

5. The borrower shall amortize the amount debited to Account 182.2 by charges to operating income, consistent with the way the amortized amounts are recovered through rates. These charges to income shall be recorded in Account 407, Amortization of Property Losses, Unrecovered Plant and Regulatory Study Costs.

6. As the recoverable amount recorded in Account 182.2 is recovered through rates, the borrower shall accrue income by charges to Account 182.2 and credits to Account 421, Miscellaneous Nonoperating Income. Accruals shall be computed by applying the same rate used to derive the present value of the asset established in Account 182.2, to the unamortized balance in that account. Accrued amounts charged to Account 182.2 shall be treated as reductions to the credit subaccount withinAccount 182.2.

Prior to implementing the accounting prescribed above, the borrower shall submit the details of each plant abandonment to RUS for approval.

Disallowances of Costs of Recently Completed Plant

When it becomes probable that a portion of the cost of recently completed plant will be disallowed for rate making purposes and a reasonable estimate of the amount of the disallowance can be made, the estimated amount of the probable disallowance shall be deducted from the reported cost of the plant and recognized as a loss. If a portion of the costs is explicitly, but indirectly disallowed, the equivalent amount of the cost shall be deducted from the reported cost of the plant and recognized as a loss.The specific accounts that shall be used to record transactions involving the disallowance of plant costs are as follows:

1. Estimated disallowed plant costs which the borrower records as a credit to Account 101, Electric Plant-in-Service, shall be charged to Account 426.5, Other Deductions.

2. If the loss qualifies as an extraordinary item under the criteria set forth in General Instruction No. 7 of the USoA, the borrower shall record the loss in Account 435, Extraordinary Deductions. To be considered extraordinary, an item shall be more than five percent of income computed before extraordinary items. If a borrower believes that a loss of less than five percent should be treated as an extraordinary item; the borrower shall, with commission approval, record the loss in Account 435 and report the loss as an extraordinary item. If the borrower is not subject to state commission jurisdiction, RUS approval is required.

134 Utility Plant Phase-in Plans

In August 1987, the Financial Accounting Standards Board issued Statement of Financial Accounting Standards No. 92, Regulated Enterprises—Accounting for Phase-in Plans (Statement No. 92). This section provides an overview of the requirements outlined in Statement No. 92.

The term phase-in plan is used to refer to any method of recognition of allowable costs in rates that meets all of the following criteria:

1. The method was adopted by the regulator in connection with a major, newly completed plant of the regulated enterprise or one of its suppliers or a major plant scheduled for completion in the near future.

2. The method defers the rates intended to recover allowable costs beyond the period in which those allowable costs would be charged to expense under generally accepted accounting principles applicable to enterprises in general.

3. The method defers the rates intended to recover allowable costs beyond the period in which those rates would have been ordered under the rate-making methods routinely used prior to 1982 by that regulator for similar allowable costs of that regulated enterprise.

If a phase-in plan is ordered by a regulator in connection with a plant on which no substantial physical construction had been performed before January 1, 1988, none of the allowable costs that are deferred for future recovery by the regulator under the plan for rate-making purposes, shall be capitalized for general-purpose financial reporting purposes (financial reporting).

If a phase-in plan is ordered by a regulator in connection with a plant completed before January 1, 1988, or a plant on which substantial physical construction had been performed before January 1, 1988, the criteria specified below shall be applied to that plan. If the phase-in plan meets all of those criteria, all allowable costs that are deferred for future recovery by the regulator under the plan shall be capitalized for financial reporting purposes as a separate asset (a deferred charge). If any one of those criteria is not met, none of the allowable costs that are deferred for future recovery by the regulator under the plan shall be capitalized for financial reporting. The criteria for determining whether capitalization is appropriate are:

1. The allowable costs in question are deferred pursuant to a formal plan that has been agreed to by the regulator;

2. The plan specifies the timing of recovery of all allowable costs that will be deferred under the plan;

3. All allowable costs deferred under the plan are scheduled for recovery within 10 years of the date when the deferral began; and

4. The percentage increase in rates scheduled under the plan for each future year is no greater than the percentage increase in rates scheduled under the plan for each immediately preceding year. That is, the scheduled percentage increase in year two is no greater than the percentage increase granted in year one, the scheduled percentage increase in year three is no greater than the percentage increase in year two, etc.

By definition, a phase-in plan approved prior to 1982 that contains provisions contrary to those detailed above is not subject to the provisions of Statement No. 92. This exemption,

however, only relates to a specific utility and a specific regulator. For example, a utility cannot use a phase-in plan approved by its regulator for a different utility as justification for its phase-in plan exceeding the 10-year limit imposed by Statement No. 92.

A phase-in plan is a method of rate making intended to moderate a sudden increase in rates while providing the regulated enterprise with recovery of its investment and a return on that investment during the recovery period. A disallowance is a rate-making action that prevents the regulated enterprise from recovering either some amount of its investment or some amount of return on its investment. Statement No. 90 specifies the accounting for disallowances of plant costs (see item 133 of this regulation). If a method of rate making that meets the criteria for a phase-in plan includes an indirect disallowance of plant costs, that disallowance shall be accounted for in accordance with Statement No. 90. Cumulative amounts capitalized under phase-in plans shall be reported as a separate asset in the balance sheet. The net amount capitalized in each period or the net amount of previously capitalized allowable costs recovered during each period shall be reported as a separate item of other income or expense in the income statement. Allowable costs capitalized shall not be reported as reductions of other expenses.

The terms of any phase-in plan in effect during the year or ordered for future years shall be disclosed in the financial statements. Statement No. 92 does not permit capitalization for financial reporting of allowable costs deferred for future recovery by the regulator pursuant to a phase-in plan that does not meet the criteria or a phase-in plan related to plant on which substantial physical construction was not completed before January 1, 1988. Nevertheless, the financial statements shall include disclosures of the net amount deferred at the balance sheet date for rate-making purposes, and the net change in deferrals for rate-making purposes during the year for those plans.

If the provisions of Statement No. 92 are applied retroactively, the financial statements of all periods presented shall be restated. In addition, the restated financial statements shall, in the year that Statement No. 92 is first applied, disclose the nature of any restatement and its effect on margins before extraordinary items, net margins, and on patronage capital at the beginning of the earliest period presented. If the financial statements for prior years are not restated, the effects of applying Statement No. 92 to existing phase-in plans shall be reported as a change in accounting principle and the financial statements shall disclose the effect of adopting Statement No. 92 on margins before extraordinary items and net margins.

The application of Statement No. 92 to an existing phase-in plan shall be delayed if both of the following conditions are met:

1. The enterprise has filed a rate application to have the plan amended to meet the criteria of Statement No. 92 or intends to do so as soon as practicable; and

2. It is reasonably possible that the regulator will change the terms of the phase-in plan so that it will meet the criteria of Statement No. 92.

If the above conditions are met, the provisions of Statement No. 92 shall be applied to the existing phase-in plan on the earlier of the date when one of the conditions ceases to be met or the date when the final rate order is received, amending or refusing to amend the phase-in plan. However, if the enterprise delays filing its application for the amendment or the regulator does not process the application in the normal period of time, the application of Statement No. 92 shall not be further delayed.

In applying the criteria of Statement No. 92 to a plan that was in existence prior to the first fiscal year beginning after December 15, 1987, and that was revised to meet that criteria, the 10-year criterion and the requirement concerning the percentage increase shall be measured from the date of the amendment rather than from the date of the first scheduled deferrals under the original plan. All phase-in plans must receive RUS approval prior to implementation.

135 Accounting for Removal or Relocation of Electric Facilities Resulting from the Action of Others

Under arrangements with another party, a borrower agrees, or is obliged, to remove, relocate, rearrange, or otherwise make changes in utility property, other than for the purpose of rendering utility service to the other party, for which the utility is reimbursed for all or a portion of the costs incurred.

Plant Accounting

The relocation of the line shall be accounted for as follows:

1. If all of the assemblies in the line are retired or completely removed and later reinstalled or if the line is constructed in a new location before the old line is removed, construction and retirement work orders shall be prepared except for the costs relating to special equipment items (transformers, oil circuit reclosers, etc.) which shall be charged to operations expense.

2. If a line is moved in its entirety to a new location except for isolated retirement units (such as at the end of the line) or poles not suitable for resetting, the cost of moving the portion of line that is moved intact shall be charged to maintenance expense while the cost related to the change in isolated retirement units or the replacement of poles not suitable for resetting shall be accounted for through use of construction and retirement work orders.

3. If a line is moved intact without any change in assemblies, the cost shall be charged to maintenance expense.

Reimbursement

If the borrower receives reimbursement for the costs related to the relocation of the line, the reimbursement shall be accounted for by crediting operation and maintenance expenses to the extent of actual expenses occasioned by the plant changes and crediting the remainder to the accumulated provision for depreciation, unless contractual terms definitely characterize residual or specific amounts as applicable to the cost of replacement. In the latter event, appropriate credits shall be entered in the plant accounts.

Reimbursement received from a telephone company for adding a pole or replacing a present pole with a taller pole under joint use contracts falls within this latter category. In this instance, appropriate credits are charged against the plant accounts.

Financing

The total reimbursement, less any portion for operations and maintenance costs, shall be entered in the ''Contributions in Aid of Construction'' section at the bottom of the Construction Work Order. When the Inventory of Work Orders (RUS Form 219) is prepared, enter only enough of the contribution in column 9 to reduce to zero the amount in column 10, ''Loan Funds Subject to Advance by RUS.'' This entry is made although none of the reimbursement received is recorded in the accounting records as a contribution in aid of construction.

136 Storm Damage

As a result of recent hurricane, flood, and ice storm damage, the Rural Utilities Service (RUS) has received several inquiries concerning the proper accounting for storm damage costs and the associated funds received from the Federal Emergency Management Administration (FEMA).

Storm damage costs should be accounted for under the work order procedure. Units of property destroyed or otherwise removed from service must be reflected on retirement work orders and units of property installed must be shown on construction work orders. To ensure that the accounting for construction and retirement costs is as accurate as possible, an effort should be made to accurately accumulate material, labor, and overhead costs. Even when extreme care has been exercised, however, it may still be necessary to use estimates to develop the appropriate cost figures.

When a storm occurs, a utility typically incurs a large retirement loss, all or a part of which should be charged to the accumulated provision for depreciation. Storm damage costs over and above construction and retirement costs represent maintenance expense.

Maintenance costs include the costs of resagging lines, straightening poles, and replacing minor items of property. When extensive damage has occurred, the need to restore the property to an operating condition without delay usually results in excessive costs being incurred. Standard property unit costs may be used as a guide in determining the amount to be capitalized. It should be noted, however, that when standard property unit costs are used, all excess costs are charged to maintenance expense.

Because of the storm's destruction, property is retired prematurely and as a result, extraordinary retirement losses occur. When such extraordinary losses occur, they should be recorded in the year in which the losses are incurred. If the recording of such losses will materially distort the income statement, such losses may be charged to Account 435, Extraordinary Deductions. These costs may be deferred and amortized to future periods only if the provisions of Statement of Financial Accounting Standards No. 71, Accounting for the Effects of Certain Types of Regulation (Statement No. 71), are applied. Under the provisions of Statement No. 71, a utility may defer certain costs, provided such costs are included in the utility's rate base and recovered through future rates. If an RUS borrower elects to apply the provisions of Statement No. 71, RUS approval is required. To obtain RUS approval, a borrower must submit:

a. A detailed description of the plan including the nature of the expense item, the amount of the deferral, the specific time period for rate recovery, and justifying support for the time period selected;

b. The accounting journal entries being used by the cooperative to record the expense deferral and amortization of the deferred costs;

c. A copy of the state Commission order authorizing recovery of the deferred costs through future rates, or in the absence of commission jurisdiction, a resolution from the cooperative's board of directors authorizing such recovery; and

d. A statement from the borrower's certified public accountant (CPA) or CPA firm indicating that the deferral and amortization of these costs is in accordance with generally accepted accounting principles.

To assist in the restoration of the damaged facilities, the Federal government often provides assistance through FEMA. Under current FEMA procedures, FEMA provides funds for the restoration of facilities based upon the cost estimates submitted by the entity requesting assistance. If the FEMA grant is for less than 100 percent of the cost estimates, FEMA does not specify which costs are to be reimbursed. When the funds are received, therefore, they should be accounted for by crediting construction, retirement, maintenance expense, and administrative expense in direct proportion to the total costs incurred. For example, if total storm damage costs are $1,000,000 with $450,000 incurred for maintenance, $300,000 for retirement, $200,000 for construction, and $50,000 for administrative costs, the FEMA reimbursement should be accounted for by applying 45 percent of the funds received as a credit to maintenance expense, 30 percent as a credit to retirement costs, 20 percent as a credit to construction, and 5 percent as a credit to administrative and general costs.

ACCOUNTING JOURNAL ENTRIES

Dr. 108.8X, Retirement Work in Progress—Storm Damage	$1,015.17	
Cr. 107.4, Construction Work in Progress—Storm Damage		$1,015.17

To transfer the removal costs recorded in Column 11 of Retirement Work Order #4401X to Account 108.8X.

Dr. 107.4, Construction Work in Progress—Storm Damage	$4,141.55	
Cr. 108.8X, Retirement Work in Progress—Storm Damage		$4,141.55

To remove material salvaged in the _____ rebuild from Account 107.4. The original entry debited Account 154, Plant Materials and Operating Supplies, and credited Account 107.4. (See Column 12 of Retirement Work Order #4401X.)

Dr. 108.8X, Retirement Work in Progress—Storm Damage	$312,230.41	
Cr. 364, Poles Towers and Fixtures		$133,377.55
Cr. 365, Overhead Conductors and Devices		59,683.08
Cr. 368, Lines Transformers		19,704.60
Cr. 369, Services		97,651.23
Cr. 373, Street Lighting and Signal Systems		1,813.95

To remove the original cost of property destroyed and retired from the classified plant accounts. This retirement is recorded, in detail, on Retirement Work Order #4401X. It is understood that this retirement covers all distribution property retired or destroyed in the _____ area exclusive of substations and special equipment items (meters, meter sockets, current and potential transformers, transformers, voltage regulators, oil circuit reclosers (OCR), and sectionalizers).

Dr. 108.6, Accumulated Provision for Depreciation of Distribution Plant	$309,104.03	
Cr. 108.8X, Retirement Work in Progress—Storm Damage		$309,104.03

To record the net loss due to the retirement of distribution lines in the _____ area. (See Retirement Work Order #4401X.)

Dr. 364, Poles, Towers and Fixtures	$99,075.40	
Dr. 365, Overhead Conductors and Devices	104,142.22	
Dr. 368, Line Transformers	25,036.07	
Dr. 369, Services	28,865.08	
Dr. 373, Street Lighting and Signal Systems	2,101.60	
Cr. 107.4, Construction Work in Progress—Storm Damage		$259,220.37

To record, in the proper classified plant accounts, Construction Work Order #4401 covering the _____ rebuild.

This entry includes:@@Q04		
Material Issued	$150,336.49	
Less: Materials Returned	15,631.39	
Net Material Used	134,705.10	
Labor and overhead estimated by using standard record unit costs	124,515.27	
Total	259,220.37	

Dr. 108.8X, Retirement Work in Progress—Storm Damage	2,384.00	
Cr. 107.4, Construction Work in Progress—Storm Damage		$2,384.00

To transfer the removal costs associated with the retirement of old transmission lines ($1,966) and substations ($418) to Account 107.4. This cost is shown in Column 11 of Retirement Work Order #4400X).

Dr. 107.4, Construction Work in Progress—Storm Damage	$1,939.74	
Cr. 108.8X, Retirement Work in Progress—Storm Damage		$1,939.74

To remove material salvaged from transmission lines ($1,545.74) and substations ($394.00) from Account 107.4. The original entry debited Account 154 and credited Account 107.4. (See Column 12 of Retirement Work Order #4400X.)

Dr. 108.8X, Retirement Work in Progress—Storm Damage	$162,172.06	
Cr. 355, Poles and Fixtures		$47,738.45
Cr. 356, Overhead Conductors & Devices		80,304.11
Cr. 362, Station Equipment		34,129.50

To remove the original cost of transmission lines and substations destroyed and retired from the classified plant accounts. (See Retirement Work Order #4400X.) (New substations were built and separately accounted for on Work Order #4406.)

Dr. 108.5, Accumulated Provision for Depreciation of Transmission Plant	$128,462.82	
Dr. 108.6, Accumulated Provision for Depreciation of Distribution Plant	34,153.50	
Cr. 108.8X, Retirement Work in Progress—Storm Damage		$162,616.32

To record the net loss due to the retirement of transmission lines ($128,462.82) and substations ($34,153.50). (See Retirement Work Order #4400X):

	Substations	Transmission plant
Original Cost	$34,129.50	$128,042.56
Add: Cost of Removal	418.00	1,966.00
	34,547.50	130,008.56
Less: Material Salvaged	394.00	1,545.74
Total	34,153.50	128,462.82

Dr. 355, Poles and Fixtures	$161,784.05	
Dr. 356, Overhead Conductors and Devices	124,704.77	
Cr. 107.4, Construction Work in Progress—Storm Damage		$286,488.82

To record, in the proper classified plant accounts, the costs of a 69 kV transmission line (_____) as detailed in Work Order #4400. This work order includes construction costs as follows:

Material Used (Net)	$171,665.62	
Labor and overhead estimated by using standard record unit costs	114,823.20	
Total	286,488.82	

Dr. 107.4, Construction Work in Progress—Storm Damage	$329.40	
Cr. 108.8X, Retirement Work in Progress—Storm Damage		$329.40

To correct the journal entry for cash received from the sale of scrapped meters and transformers. The original entry credited Account 107.4 at the time of receipt.

Transformers	$318.00	
Meters	11.40	
Net Materials Used	329.40	

Dr. 108.8X, Retirement Work in Progress—Storm Damage		$137,671.22
Cr. 365, Overhead Conductors and Devices		$4,557.00
Cr. 368, Line Transformers		112,815.22
Cr. 370, Meters		20,299.00

To remove the cost of meters, transformers, and OCRs lost or destroyed from the primary plant accounts. (See Retirement Work Order #4402X.)

737 Transformers	$112,815.22	
31 OCRs	4,557.00	
1,532 Meters	20,299.00	
Total	137,671.22	

Dr. 108.6, Accumulated Provision for Depreciation of Distribution Plant	$137,341.82	
Cr. 108.8X, Retirement Work in Progress		$137,341.82

To record the net loss due to the retirement of meters, transformers, and OCRs. (See Retirement Work Order #4402X.)

Original Cost	$137,671.22	
Salvaged Realized	329.40	
Total	137,341.82	

Dr. 186, Miscellaneous Deferred Debits	$1,319.85	
Cr. 107.4, Construction Work in Progress—Storm Damage		$1,319.85

To record the engineering costs associated with future construction work in the _____ area.

Dr. 593, Maintenance of Overhead Lines	$607.24	
Dr. 595, Maintenance of Line Transformers	19,365.86	
Dr. 597, Maintenance of Meters	6,595.56	
Cr. 107.4, Construction Work in Progress—Storm Damage		$26,568.66

To charge the costs of repairing damaged meters, transformers, voltage regulators, and OCRs to the appropriate expense accounts. Repair costs were originally charged to Account 107.4.

	593	595	597
Meters			$6,595.56
Transformers		$18,869.95	
Voltage Regulators		495.91	
Oil Circuit Reclosers	$607.24		
Total	607.24	19,365.86	6,595.56

Dr. 920, Administrative and General Salaries	$32,000.00	
Dr. 921, Office Supplies and Expenses	4,421.69	
Cr. 107.4, Construction Work in Progress—Storm Damage		$36,421.69

To charge the administrative costs incurred to obtain the FEMA grant to the appropriate expense accounts. Administrative costs were originally charged to Account 107.4.

Salaries	$32,000.00
Office Supplies	4,421.69
Total	$36,421.69

Dr. 571, Maintenance of Overhead Lines	$3,675.60	
Dr. 593, Maintenance of Overhead Lines	33,080.40	
Cr. 107.4, Construction Work in Progress Storm Damage		$36,756.00

To allocate expenses remaining in Account 107.4 to distribution and transmission maintenance expense. It was estimated that only 10 percent is applicable to transmission.

Dr. 426.5, Other Deductions	$275,000.00	
Dr. 435, Extraordinary Deductions		
Dr. 182.1, Extraordinary Property Losses		
Cr. 108.5, Accumulated Provision for Depreciation of Transmission Plant		$35,000.00
Cr. 108.6, Accumulated Provision for Depreciation of Distribution Plant		240,000.00

To restore the accumulated provisions for depreciation to their appropriate levels based upon a study of plant currently in service.

NOTE: Account 426.5, Other Deductions, should be used to record the retirement loss as a current period expense. Account 435, Extraordinary Deductions, may be used when the loss will materially distort the income statement. Account 182.1, Extraordinary Property Losses, should be used when such costs are being deferred under the provisions of Statement No. 71. Costs recorded in this account should be amortized to Account 407, Amortization of Property Losses, as the costs are recovered through rates.

Dr. 131.1, Cash—General	$1,000,000.00	
Cr. 253, Other Deferred Credits		$1,000,000.00

To record the receipt of funds from the Federal Emergency Management Administration (FEMA).

Dr. 253, Other Deferred Credits	$1,000,000.00	
Cr. 108.5, Accumulated Provision for Depreciation of Transmission Plant		$74,205.00
Cr. 108.6, Accumulated Provision for Depreciation of Distribution Plant		191,575.00
Cr. 186, Miscellaneous Deferred Debits		872.00
Cr. 355, Poles and Fixtures		129,056.00
Cr. 356, Overhead Conductors and Devices		99,408.00
Cr. 364, Poles, Towers and Fixtures		78,916.00
Cr. 365, Overhead Conductors and Devices		82,840.00
Cr. 368, Line Transformers		20,056.00
Cr. 369, Services		23,108.00
Cr. 373, Street Lighting and Signal Systems		1,744.00
Cr. 426.5, Other Deductions		219,220.00
Cr. 571, Maintenance of Overhead Lines		2,900.00
Cr. 593, Maintenance of Overhead Lines		26,600.00

Cr. 595, Maintenance of Line Transformers	15,300.00
Cr. 597, Maintenance of Meters	5,200.00
Cr. 920, Administrative and General Salaries	25,491.00
Cr. 921, Office Supplies and Expenses	3,509.00

To allocate FEMA funds to the proper accounts.

Summary of Costs

Maintenance:	
Account 571, Maintenance of Overhead Lines	$3,675.60
Account 593, Maintenance of Overhead Lines	33,687.24
Account 595, Maintenance of Line Transformers	19,365.86
Account 597, Maintenance of Meters	6,595.56
Total Maintenance Costs	63,324.26
Retirement Loss:	
Account 108.5, Accumulated Provision for Depreciation of Transmission Plant	93,462.82
Account 108.6, Accumulated Provision for Depreciation of Distribution Plant	240,599.35
Account 426.5, Other Deductions	275,000.00
Total Retirement Loss	609,062.17
Construction:	
Account 186, Miscellaneous Deferred Debits	1,319.85
Account 355, Poles and Fixtures	161,784.05
Account 356, Overhead Conductors and Devices	124,704.77
Account 364, Poles, Towers and Fixtures	99,075.40
Account 365, Overhead Conductor and Devices	104,142.22
Account 368, Line Transformers	25,036.07
Account 369, Services	28,865.08
Account 373, Street Lighting and Signal Systems	2,101.60
Total Construction Cost	547,029.04
Administrative:	
Account 920, Administrative and General Salaries	$32,000.00
Account 921, Office Supplies and Expenses	4,421.69
Total Administrative Cost	36,421.69
Maintenance	63,324.26
Retirement Loss	609,062.17
Construction	547,029.04
Administrative	36,421.69
Total Costs	1,255,837.16

Distribution of FEMA Funds

Maintenance: 63,324.26÷1,255,837.16=.0504=5.0%
Retirement: 609,062.17÷1,255,837.16=.4850=48.5%
Construction: 547,029.04÷1,255,837.16=.4356=43.6%
Administrative: 36,421.69÷1,255,837.16=.0290=2.9%

Maintenance: $1,000,000.00×5.0%=	$50,000.00
Retirement: $1,000,000.00×48.5%=	485,000.00
Construction: $1,000,000.00×43.6%=	436,000.00
Administrative: $1,000,000.00×2.9%=	29,000.00
Total	1,000,000.00

Distribution of FEMA Funds—Maintenance

Account 571: 3,675.60÷63,324.26=.0580=5.8%
Account 593: 33,687.24÷63,324.26=.5320=53.2%
Account 595: 19,365.86÷63,324.26=.3058=30.6%

Account 597: 6,595.56÷63,324.26=.1041=10.4%

Account 571: $50,000.00×5.8%=	$2,900.00
Account 593: $50,000.00×53.2%=	26,600.00
Account 595: $50,000.00×30.6%=	15,300.00
Account 597: $50,000.00×10.4%=	5,200.00
Total	50,000.00

Distribution of FEMA Funds—Retirement Loss

Account 108.5: 93,462.82÷609,062.17=.1535=15.3%
Account 108.6: 240,599.35÷609,062.17=.3950=39.5%
Account 426.5: 275,000.00÷609,062.17=.4515=45.2%

Account 108.5: $485,000.00×15.3%=	$74,205.00
Account 108.6: $485,000.00×39.5%=	191,575.00
Account 426.5: $485,000.00×45.2%=	219,220.00
Total	485,000.00

Distribution of FEMA Funds—Construction

Account 186: 1,319.85÷547,029.04=.0024=.2%
Account 355: 161,784.05÷547,029.04=.2958=29.6%
Account 356: 124,704.77÷547,029.04=.2280=22.8%
Account 364: 99,075.40÷547,029.04=.1811=18.1%
Account 365: 104,142.22÷547,029.04=.1904=19.0%
Account 368: 25,036.07÷547,029.04=.0457=4.6%
Account 369: 28,865.08÷547,029.04=.0528=5.3%
Account 373: 2,101.67÷547,029.04=.0038=.4%

Account 186: $436,000.00×.2%=	$872.00
Account 355: $436,000.00×29.6%=	129,056.00
Account 356: $436,000.00×22.8%=	99,408.00
Account 364: $436,000.00×18.1%=	78,916.00
Account 365: $436,000.00×19.0%=	82,840.00
Account 368: $436,000.00×4.6%=	20,056.00
Account 369: $436,000.00×5.3%=	23,108.00
Account 373: $436,000.00×.4%=	1,744.00
Total	436,000.00

Distribution of FEMA Funds—Administrative

Account 920: 32,000.00÷36,421.69=.8786=87.9%
Account 921: 4,421.69÷36,421.69=.1213=12.1%

Account 920: $29,000.00×87.9%=	$25,491.00
Account 921: $29,000.00×12.1%=	3,509.00
Total	29,000.00

137 Impairment of Long-Lived Assets

Statement of Financial Accounting Standards No. 121, Accounting for the Impairment of Long-Lived Assets and for Long-Lived Assets to be Disposed of (Statement No. 121), requires reporting entities to review all long-lived assets and certain identifiable intangibles that are to be held, used, or disposed of by that entity for impairment whenever events and changes in circumstances indicate that the carrying amount of the asset may not be recoverable. If the sum of the expected future cash flows (undiscounted and without interest charges) is less than the carrying value of the asset, the entity must recognize an impairment loss. The impairment loss is measured as the amount by which the carrying amount of the asset exceeds the fair value of the asset. The impairment loss is reported as a component of income from continuing operations before income taxes for entities presenting an income statement and in the statement

of activities of not-for-profit organizations. Statement No. 121 does not apply to assets included in the scope of Statement of Financial Accounting Standards No. 90, Regulated Enterprises—Accounting for Abandonments and Disallowances of Plant Costs.

Assets To Be Held or Used

Entities are required to review long-lived assets and certain identifiable intangibles whenever events or changes in circumstances indicate that the carrying value of the asset may not be recoverable. For example:

1. A significant decrease in the market value of an asset;
2. A significant change in the extent or manner in which an asset is used;
3. A significant physical change in an asset;
4. A significant adverse change in legal factors or in the business climate that could affect the value of an asset;
5. An adverse action or assessment by a regulator;
6. An accumulation of costs significantly in excess of the amount originally expected to acquire or construct an asset; and
7. A current period operating or cash flow loss combined with a history of operating or cash flow losses or a projection or forecast that demonstrates continued losses associated with an asset used for the purpose of producing revenue.

The impairment of the asset is measured by estimating the future cash flows expected to result from the use of the asset and its disposition. Assets are grouped at the lowest level for which there are identifiable cash flows that are largely independent of the cash flows of other groups of assets. Future cash flows are those cash inflows that are expected to be generated by the asset less the cash outflows expected to be necessary to maintain those inflows. If the future cash flows (undiscounted and without interest charges) are less than the carrying value of the asset, an impairment loss must be recognized. If the expected future cash flows are greater than the carrying value of the asset, no impairment loss exists.

The impairment loss is the amount by which the carrying amount (acquisition cost less accumulated depreciation) of the asset exceeds the fair value of the asset. The fair value of the asset is the amount for which the asset could be bought or sold in an arms-length transaction between willing parties. A quoted market price is the best evidence of fair value. If this information is not available, the fair value should be based upon the best information available. Consideration should be given to the price of similar assets and valuation techniques such as the present value of the expected future cash flows discounted at a rate representative of the risk involved, option-pricing models, matrix pricing, option-adjusted spread models, and fundamental analysis. All available information should be considered when using the above pricing techniques.

If an impairment is recognized, the carrying value of the asset is reduced to the lower of its fair value or its carrying value and, if depreciable, depreciated over the remaining useful life. Previously recognized impairment losses cannot be restored. If the asset was acquired in a business combination and there is goodwill resulting from the transaction, the goodwill is included in the asset grouping and reduced or eliminated before any adjustment is made to the carrying value of the asset.

The following financial statement disclosures are required in the period in which the impairment is recognized:

1. A description of the impaired assets and the facts and circumstances surrounding the impairment;
2. The amount of the impairment and how fair value was determined;
3. The caption in the income statement or the statement of activities in which the impairment loss is aggregated if that loss has not been presented as a separate caption or reported parenthetically on the face of the statement; and
4. If applicable, the business segment(s) affected.

Assets To Be Disposed

Statement No. 121 also applies to all long-lived assets and certain identifiable intangibles for which management, having the authority to approve the action, has committed to a plan of disposal except those assets covered by

APB No. 30, Reporting the Results of Operations—Reporting the Effects of Disposal of a Segment of a Business, and Extraordinary, Unusual and Infrequently Occurring Events and Transactions. An asset to be disposed of is carried at the lower of its carrying amount (acquisition cost less accumulated depreciation) or its fair value less cost to sell.

The fair value of the asset to be disposed of is computed in the same manner as that for an asset to be held or used by the entity. Selling costs include the incremental direct cost to transact the sale—broker commissions, legal fees, title transfer, and other closing costs that must be incurred before legal title can be transferred. Costs such as insurance, security service, and utilities are generally excluded unless these costs are part of a contractual agreement that obligates the entity to incur such costs in the future. If the asset's fair value is based upon current market price or the current selling price for a similar asset, the fair value is considered a current amount and is not discounted. If, however, the fair value is based upon discounted expected future cash flows and if the sale is to occur beyond one year, the cost to sell must also be discounted. Assets covered by this statement are not depreciated (amortized) while being held for disposal.

Subsequent revisions in estimates of fair value less cost to sell are reported as adjustments to the carrying amount of the asset to be disposed of as long as the carrying amount of the asset does not exceed the original carrying amount.

The following financial statement disclosures are required in the period in which the impairment is recognized:

1. A description of the assets to be disposed of including the facts and circumstances leading to the expected disposal, the expected disposal date, and the carrying amount of those assets;

2. If applicable, the business segment(s) in which the assets to be disposed of are held;

3. The amount, if any, of the impairment loss resulting from the adoption of this statement;

4. The gain or loss, if any, resulting from subsequent revisions in the estimates of fair value less cost to sell;

5. The caption in the income statement or statement of activities in which the gains or losses are aggregated if those gains or losses have not been presented as a separate caption or reported parenthetically on the face of the statement; and

6. The results of operations for assets to be disposed of to the extent that those results are included in the entity's results of operations for the period and can be identified.

Accounting Requirements

All borrowers must adopt the accounting prescribed by Statement No. 121.

Effective Date and Implementation

Statement No. 121 is effective for financial statements for fiscal years beginning after December 15, 1995. Impairment losses resulting from the application of this statement to assets that are held or used by the entity must be reported in the period in which the recognition criteria are first applied and met. Impairment losses attributable to assets to be disposed of must be reported as the cumulative effect of a change in accounting principle as prescribed in Accounting Principles Board Opinion No. 20, Accounting Changes.

Accounting Journal Entries—Implementation Date

If a borrower has impaired assets that are held or used at the implementation date, the following entry should be recorded:

Dr. 426.5, Other Deductions
Cr. 300 Series of Accounts, Plant Accounts
To record the adoption of Statement No. 121 for the impairment of assets that are held or used.

If a borrower has impaired assets to be disposed of at the implementation date, the following entry should be recorded:

Dr. 435.1, Cumulative Effect on Prior Years of a Change in Accounting Principle
Cr. 300 Series—Plant Accounts
To record the adoption of Statement No. 121 for assets that are to be disposed.

Accounting Journal Entries—Subsequent to Implementation Date

If an asset that is either held, used or to be disposed of becomes impaired, the following entry should be recorded:

Dr. 426.5, Other Deductions
Cr. 300 Series—Plant Accounts
To record the impairment of a plant asset.

If a borrower makes a subsequent revision in the estimate of the fair value less the cost to sell of an asset to be disposed of, the following entry should be recorded:

Dr. 300 Series—Plant Accounts
Cr. 421, Miscellaneous Nonoperating Income
To revise the fair value of an asset to be disposed.

138 Automatic Meter Reading Systems—Turtles

Automatic meter reading systems were developed from technology called power line carrier communication systems. One such system, developed by Hunt Technologies, Inc., is called by its brand name, the Turtle system. In addition to its function as an automated reading device, the Turtle can provide outage detection, power failure counts, and other potential applications. The current Turtle system does not have the capability for applications such as collection of load survey or interval data. A Turtle system consists of:

1. A meter reader mounted (retrofitted) inside the meter;
2. A receiver located in each substation; and
3. Monitoring and programming equipment (software and personal computer) usually located in the headquarters building.

The system transmits continuous information one way from the meter to a receiver located in the substation. The receiver constantly monitors every Turtle meter served by the substation. The substation receiver can be sized to monitor up to 3,000 Turtle meter readers at the same time. The data is then transmitted to the headquarters monitoring equipment via telephone line or an equivalent communication system.

The technical literature and other information provided by the manufacturer indicates that this system can only be used for remote meter reading, outage detection, power failure counts, and phase identification. At this time, there is no indication that the system supports other functions such as home security. Therefore, the accounting prescribed for the Turtle meter reading devices and support equipment relates only to electric utility operations.

Accounting Requirements

The function of the equipment is the primary factor in determining the account in which the equipment shall be recorded. The components of the Turtle automatic meter reading system shall be recorded in Account 370, Meters. The cost of the meter reader encoding device and retrofitting the meter with the meter reader unit shall be capitalized to the cost of the existing meter. Any associated operating expenses shall be charged to Account 586, Meter Expenses, with maintenance expenses charged to Account 597, Maintenance of Meters.

Separate continuing property records shall be established for the meters, either fitted or retrofitted with the device; the receiver; the personal computer; and the system software. The meters, receivers, and personal computer shall be depreciated over the manufacturer's estimated useful service life. The system software shall be depreciated over the estimated useful service life of the program not to exceed 5 years.

139 Global Positioning Systems

The Global Positioning System (GPS) is a worldwide radio-navigation system formed from a network of 24 satellites and their ground stations. Utilities are using this advanced technology geographic data collection system to update and modernize their system maps. GPS uses a system of satellites orbiting the earth to establish plant locations with pinpoint accuracy. By triangulating from three satellites and using radio signals to measure distances and locate items, system-wide maps can be created of the utility's service area. A field inventory is then taken of the utility's plant and plotted onto the map. The GPS consists of base station equipment, remote station equipment, the GPS program, and mapping conversion software.

All equipment associated with GPS is dedicated to the mapping effort. The base station is installed at a fixed location and ties satellite measurements into a solid local reference. The remote station is a portable receiver that is taken into the field to determine locations and is moved from site to site. The GPS program is the application software that operates the station equipment and is used by layout technicians to gather information of existing and new facilities in the field. The conversion software is used for converting the GPS and inventory information gathered in the field into a form usable by the mapping program.

Accounting Requirements

The function and location of the equipment are the primary factors in determining the account in which the equipment shall be recorded. The components of the GPS shall be accounted for as follows:

1. *Remote and Base Station Equipment.* The cost of the equipment, both remote and fixed, shall be capitalized in a subaccount of Account 391, Office Furniture and Equipment.

2. *GPS Program and Conversion Software for Mapping.* The cost of GPS program and conversion software shall be capitalized in a subaccount of Account 391, Office Furniture and Equipment.

3. *GPS/GIS Field Inventory of System.* The cost of performing a GPS/GIS survey and field inventory of the existing system, by either a consultant or the utility's own forces, shall be charged to Account 588, Miscellaneous Distribution Expenses.

140 Radio-Based Automatic Meter Reading Systems

Radio-based automatic meter reading technology allows meters equipped with a low-power radio device called an ERT (Encoder, Receiver, Transmitter) to be read from a remote location. The ERT device can either be retrofitted to an existing meter or purchased installed in a new meter. The ERT device ''encodes'' energy consumption and transmits this information to a radio transceiver equipped handheld computer. The data collected and stored in the handheld computer is then uploaded to a billing computer using specialized software for that purpose.

Accounting Requirements

The function of the equipment is the primary factor in determining the account in which the equipment shall be recorded. The components of the radio-based automatic meter reading system shall be recorded in Account 370, Meters. The cost of the meter reader encoding device and retrofitting the meter with the meter reader unit shall be capitalized to the cost of the existing meter. Any associated operating expenses shall be charged to Account 586, Meter Expenses, with maintenance expenses charged to Account 597, Maintenance of Meters.

Separate continuing property records shall be established for the meters, either fitted or retrofitted with the device; the handheld computer; and the upload software. The meters and handheld computer shall be depreciated over the manufacturer's estimated useful service life. The upload software shall be depreciated over the estimated useful service life of the program not to exceed 5 years.

201 Supplemental Financing

Many borrowers secure additional financing from sources other than RUS. CFC was established to provide a source of supplemental financing. Although the accounting provided in this section refers to CFC, it is applicable to other sources of supplemental financing as well.

1. *Membership Fees*

When a membership fee is paid to CFC, the payment shall be recorded as a debit to Account 123.23, Other Investments in Associated Organizations.

2. *Subscriptions*

The subscription agreement to purchase Capital Term Certificates (CTCs) is a binding obligation to pay an initial subscription in equal annual payments over the first three years and an additional annual subscription payable in the fourth through fifteenth years.

The annual subscriptions to CFC for the fourth through fifteenth years is 2.0 percent of total operating revenues after deducting the cost of power.

Using the best data available, each borrower shall estimate the amount of CTCs that are required to be purchased. Estimates are not expected to be precise and adjustments shall be made when future projections indicate a change is needed. When the agreement to purchase CTCs is made, an entry shall be recorded debiting Account 123.21, Subscriptions to Capital Term Certificates—Supplemental Financing, and crediting Account 224.11, Other Long-Term Debit—Subscriptions. When the CTCs are actually purchased, the following entries shall be recorded:

Dr. 224.11, Other Long-Term Debt—Subscriptions
Cr. 131.1, Cash—General
Dr. 123.22, Investments in Capital Term Certificates—Supplemental Financing
Cr. 123.21, Subscriptions to Capital Term Certificates—Supplemental Financing

3. *Interest Receipts*

Interest accrues monthly to the holder of CTCs at a rate in accordance with the terms of the CFC Invitation to Subscribe. The accrual of interest and the receipt of interest proceeds shall be recorded as follows:

Dr. 171, Interest and Dividends Receivable
Cr. 419, Interest and Dividend Income
To record the monthly accrual of interest.
Dr. 131.1, Cash—General
Cr. 171, Interest and Dividends Receivable
To record the receipt of interest proceeds from the investment in CTCs.

NOTE: Any amounts received in excess of the previous accruals shall be credited to Account 419.

Interest penalties may be charged by CFC for late payments on any subscription from the date that the payment was due to the date that the payment was actually received. Such charges shall be expensed to Account 431, Other Interest Expense.

4. *Notes*

If a note is due more than one year after the date of the note, the appropriate subaccount of Account 224, Other Long-Term Debt, shall be credited. If the note is due less than one year from the date of the note, Account 231, Notes Payable, shall be credited.

When a loan from CFC has been consummated and a note is executed, Account 224.13, Supplemental Financing Notes Executed—Debit, shall be debited; and Account 224.12, Other Long-Term Debt—Supplemental Financing, credited. When a loan from another source has been consummated, Account 224.15, Notes Executed—Other—Debit, shall be debited; and Account 224.14, Other Long-Term Debt—Miscellaneous, credited.

5. *Loan Proceeds*

Cash proceeds from unsecured short-term loans shall be deposited into the General Fund Account. Cash proceeds from all secured loans shall be deposited into the Construction Fund Trustee Account.

From two to seven percent, depending upon the class of borrower and its debt-equity ratio, of each CFC loan is applied to the purchase of Capital Term Certificates. At the time of a borrower's first requisition under the CFC loan, the following entry shall be recorded:

Dr. 131.2, Cash—Construction Fund—Trustee
Dr. 123.22, Investments in Capital Term Certificates—Supplemental Financing
Cr. 224.13, Supplemental Financing Notes Executed—Debit
To record the requisition of funds from CFC.

6. *Capital Credits*

As a result of borrowing from CFC or other lenders organized on a cooperative basis, a borrower may receive capital credit allocations. These allocations are usually based upon the borrower's participation in the lending program with participation measured by the amount of interest expense and conversion costs incurred.

To account for patronage capital allocations from cooperative lenders, the following journal entries shall be recorded:

Dr. 123.1, Patronage Capital from Associated Cooperatives
Cr. 424, Other Capital Credits and Patronage Capital Allocations
To record the allocation of capital credits from a cooperative lender.

NOTE: If any portion of the interest expense was capitalized as a component of construction cost, a similar portion of the capital credit allocation shall be credited to construction rather than to Account 424. The portion credited to construction shall be determined by applying the percentage of interest expense charged to construction for that particular lender to the interest expense incurred for that lender.

Dr. 131.1, Cash—General
Cr. 123.1, Patronage Capital from Associated Cooperatives
To record the cash receipt of patronage capital credits from cooperative lenders.

301 Forfeited Customers' Deposits

Customers may be required to make deposits to guarantee payment of amounts billed for electric service. When a customer discontinues service, the customer's deposit shall first be applied to unpaid energy bills, with the balance remitted by check to the customer. If the check is returned, it shall be voided and the original entry that was made when the check was issued shall be reversed.

Unclaimed balances of customer deposits shall remain in Account 235, Customer Deposits, until the legal liability of the cooperative to make such a refund has elapsed. When there is no further legal liability to refund the deposit and if it does not escheat to the state, it shall be transferred to Account 144, Accumulated Provision for Uncollectible Customer Accounts—Credit, retaining full information of all particulars.

401 Computer Software Costs

Computer software consists of programs and routines (sets of computer instructions) which direct the operation of the computer. Software may refer to generalized routines useful in computer operations or to programs for specific applications such as payroll.

The distinction between generalized software and application software is important. Generalized software provides operating support for individual applications. This would include programs for such tasks as making printouts of machine-readable records, sorting records, organizing and maintaining files, translating programs written in a symbolic language into machine-language instructions, and scheduling jobs through the computer. These programs are generally furnished by the manufacturer.

Application software consists of a set of instructions for performing a particular data processing task. Application programs are generally written by the user installation, but are frequently obtained as prewritten packages from software vendors. Application software includes programs such as payroll, billing, general ledger, as well as engineering or managerial applications.

Costs incurred with the purchase or development of computer software shall be accounted for as follows:

1. Capitalize in a subaccount of Account 391, Office Furniture and Equipment, all costs for generalized software. Depreciate the cost over the service life (or remaining life) of the main hardware (i.e., containing central processor). If the purchase invoice does not break out or assign a cost to the ''generalized software,'' it is appropriate to include the full amount in hardware costs. Capitalize in a separate subaccount of Account 391, all costs for applications software determined to have a service life of over one year. Depreciate the cost over the estimated useful service life of the program. This depreciation period shall not exceed five (5) years. RUS realizes, however, that there may be circumstances that justify a useful life longer than 5 years. When this is the case and it is management's intent to utilize these programs over an extended period, written justification shall be submitted to RUS for approval.

2. Expense in Account 921, Office Supplies and Expenses, in the period incurred, all costs associated with the maintenance, updating, and conversion of files or revision of all software, and all costs for software with a useful life of less than 1 year. Also expense in Account 921, the unamortized cost of all software determined, during the year, to be no longer used by or useful to the cooperative. Such costs that are clearly applicable to any category of operating expenses other than the administrative and general category, however, shall be included in the appropriate account in such category. In accordance with the USoA, no portion of such costs shall be capitalized to construction or retirement activities.

In determining the total cost of purchased or internally developed software, the following items shall be included:

a. Costs incurred for feasibility studies if they result in the purchase or development of software;

b. All costs related to the actual purchase or development of the software. These costs must be specifically identifiable with the software and properly supported by time cards, invoices, or other documents; and

c. All costs incurred in ''testing and debugging'' the software.

Computer software costs are properly chargeable to Account 107, Construction Work in Progress, provided that the following criteria are met:

1. The computer program is specifically dedicated to performing a construction related activity, and

2. The cost of the software is itemized separate and apart from other hardware and software costs.

The cost of software programs meeting the above requirements and having an estimated useful service life in excess of 1 year shall be recorded in Account 186, Miscellaneous Deferred Debits, and amortized to Account 107, Construction Work in Progress, over the estimated service life of the program not to exceed 5 years.

All costs related to training personnel in the use of software shall be expensed as incurred.

The accounting in this section is not intended to apply to immaterial amounts. When it is deemed that the costs of the recordkeeping necessary to amortize these costs outweigh the benefits to the members, software costs shall be expensed in the year incurred.

For computer costs relating to load control equipment, refer to Item 118 of this section.

402 Legal Expenses

Utilities may incur legal expenses which pertain to construction activities, loan activities, or general services. The proper accounting treatment for legal expenses is as follows:

1. Legal fees incurred in connection with a construction project, including the court costs directly related thereto, which can be identified and supported as such, shall be capitalized in Account 107, Construction Work-in-Progress, as a cost of construction.

2. Legal fees specifically identified and properly supported as resulting from activities designed to obtain long-term debt, shall be deferred in Account 181, Unamortized Debt Expense.

3. Legal fees for all other services and fees which cannot be properly identified will require expensing to either Account 417.1, Expenses of Nonutility Operations, or Account 923, Outside Services Employed, as appropriate.

To properly support the capitalization or deferral of legal fees, the attorney shall provide an itemization of services performed and the corresponding costs. Only those costs specifically identified by the attorney as being related to construction or loan activities shall be capitalized or deferred as described above.

403 Leases

Lease transactions shall be accounted for as either a capital lease or an operating lease depending upon whether or not the lease meets the criteria for classification as a capital lease. The definitions for capital and operating leases and the criteria used to determine which method shall be used are as follows:

Definitions

1. *Capital Lease:* A lease that transfers substantially all of the benefits and risks inherent in the ownership of the property to the lessee, who accounts for the lease as an acquisition of an asset and the incurrence of a liability.

2. *Operating Lease:* An operating lease is a simple rental agreement which does not meet the criteria for a capital lease. Under the terms of an operating lease, the lessee records the rental payments due over the term of the lease as rent expense.

Criteria

A lease agreement shall be classified as a capital lease if one or more of the following criteria is met:

1. Ownership of the property is transferred to the lessee by the end of the lease term;

2. The lease contains a bargain purchase option;

3. The lease term is equal to 75 percent or more of the estimated useful life of the leased property; or

4. The present value of the lease payments at the inception of the lease equals or exceeds 90 percent of the fair market value of the leased property.

A lease agreement qualifying as a capital lease shall be recorded in either Account 101.1, Property Under Capital Leases;Account 120.6, Nuclear Fuel Under Capital Leases; or Account 121, Nonutility Property, as appropriate, at the present value (at the beginning of the lease term) of the minimum lease payments. If, however, this amount exceeds the fair value of the leased property at the inception of the lease, the asset shall be recorded at its fair market value. An offsetting credit shall be recorded in Account 227, Obligations Under Capital Leases—Noncurrent, with the current portion recorded in Account 243, Obligations Under Capital Leases—Current. Assets recorded in Account 101.1 shall be classified separately according to the detailed accounts (301–399) provided for electric plant in service.

Monthly payments made under the lease obligation shall be charged to rent expense, fuel expense, or construction work-in-progress as they become payable. Similarly, the leased asset and the associated obligation shall be reduced by the current amount due.

The following journal entries shall be used by the lessee to record capital lease transactions:

Dr. 101.1, Property Under Capital Leases
  Cr. 243, Obligations Under Capital Leases—Current
  Cr. 227, Obligations Under Capital Leases—Noncurrent
To record the capital lease agreement.
Dr. 550, Rents
  Cr. 232, Accounts Payable
Dr. 243, Obligations Under Capital Leases—Current
  Cr. 101.1, Property Under Capital Leases
To record the monthly rental payment due.
Dr. 232, Accounts Payable
  Cr. 131.1, Cash—General
To record the monthly lease payment.

Operating leases which are simple rental agreements do not require the recording of an asset or a liability. The entries that are required to record an operating lease by the lessee are as follows:

Dr. 550, Rents
  Cr. 232, Accounts Payable
To record the monthly rental payment due.
Dr. 232, Accounts Payable
  Cr. 131.1, Cash—General
To record the monthly lease payment.

For purposes of illustration, the journal entries presented in this interpretation debit Account 550, Rents. However, Account 507, Rents (steam power generation); Account 525, Rents (nuclear power generation); Account 540, Rents (hydraulic power generation); Account 550, Rents (other power production); Account 567, Rents (transmission expense); Account 589, Rents (distribution expense); and Account 931, Rents (general and administrative), should be charged, as appropriate, depending upon the function of the equipment being leased.

404 Consolidated Financial Statements

In October 1987, the Financial Accounting Standards Board issued Statement of Financial Accounting Standards No. 94, Consolidation of All Majority-Owned Subsidiaries (Statement No. 94). For purposes of reporting to RUS, Statement No. 94 shall be applied as follows:

1. An RUS borrower that is a subsidiary of another entity shall prepare and submit to RUS separate financial statements even though this financial information is presented in the parent's consolidated statements.

2. In those cases in which an RUS borrower has a majority-ownership in a subsidiary, the borrower must prepare consolidated financial statements in accordance with the requirements of Statement No. 94. These consolidated statements must also include supplementary schedules presenting a Balance Sheet and Income Statement for each majority-owned subsidiary included in the consolidated statements.

Although Statement No. 94 requires the consolidation of majority-owned subsidiaries, RUS Forms 7 and 12 must be prepared on an unconsolidated basis.

501 Patronage Capital Assignments

Accounting for patronage capital and margins may vary depending upon the individual cooperative's bylaws. The comments contained in this section relate to the application of the standard bylaw provisions.

The entries required, at year's end, to record patronage capital transactions where there is no major merchandising program are as follows:

Dr. 219.1, Operating Margins
Dr. 219.2, Nonoperating margins
Cr. 201.2, Patronage Capital Assignable
To record the amount of patronage capital assignable.
Dr. 201.2, Patronage Capital Assignable
Cr. 201.1, Patronage Capital Credits
To record the allocation of patronage capital to the patrons' accounts.

The procedure for determining the amount of patronage capital assignable to the individual patron on a total dollar basis is as follows:

1. Determine the total amount to be assigned for the year (Account 201.2).
2. Determine patronage from electric service, the total of consumers' billings (Accounts 440–447).
3. Determine the percentage factor to be used in calculating patronage capital to be credited to each consumer account. Divide ''1'' by ''2''.
4. Determine the amount of capital to be credited to each consumer. Multiply the individual consumer's billings for the year by the percentage factor obtained in ''3'' above.

The procedure for determining the amount of patronage capital assignable to the individual patron on a dollar basis, less the cost of power, is as follows:

1. Determine the total amount to be assigned for the year.
2. Determine the total amount of revenue received from each classification of customers.
3. Determine the total cost of power for each classification of customers. (For example, use cost per kWh sold).
4. For each classification of customers subtract the amount obtained in ''3'' from the amount obtained in ''2,'' to obtain the total amount received, less cost of power, by classification of customers.
5. Add the amounts obtained in ''4'' to obtain the total amount of revenue, less cost of power.
6. Divide the total amount received, less cost of power for each classification of customers (amounts obtained in ''4''), by the total amount received, less cost of power for all customers (amount obtained in ''5'') to obtain the prorata percentage for each classification of customers.
7. Multiply the total amount to be allocated (amount obtained in ''1'') by the prorata percentage for each classification of customers (obtained in ''6'') to obtain the amount to be assigned each classification of customers.
8. Divide the amount to be assigned each classification of customers (amount obtained in ''7'') by the total amount received from the classification of customers (amount obtain in ''2'') to obtain the percentage factor for each classification of customers.
9. Determine the total amount received from each individual customer.
10. Multiply the total amount received from each individual customer (amount obtained in ''9'') by the percentage factor for his classification (amount obtained in ''8'') to obtain the amount of capital to be assigned each individual customer.

After calculating the patronage capital to be credited to each customer, there is usually a small balance remaining. This small balance shall remain in Account 201.2, Patronage Capital Assignable, and shall be added to the amount to be assigned in the following year.

Proper records shall be maintained to support all capital credit transactions. As a minimum, these records shall show, for each patron, the amount of capital credited for each year as well as the amount and date retired for each year.

The process of transferring capital credits from the Patronage Capital Assignable accounts to the Patrons' Capital Credits Assigned accounts or to the Patrons' Capital Credits accounts and the making of entries to individual patron's records constitutes an assignment of capital credits. This holds true for recordkeeping purposes as well as from a legal point of view. This assignment shall be followed by formal notification to patrons within a reasonable period of time.

In the event that a distribution cooperative incurs a net loss, that loss shall not be allocated to its members (patrons). The loss shall be accumulated and offset by future nonoperating margins.

502 Patronage Capital Retirements

As the board of directors has the responsibility for determining whether the financial condition of the cooperative will permit retirement of capital credits and whether the proposed retirement complies with mortgage and bylaw provisions, the authorization for the retirement shall be set forth in the board minutes. The entries to record the general retirement of capital credits shall be as follows:

Dr. 201.1, Patronage Capital Credits
Cr. 238.1, Patronage Capital Payable
To record the board of directors' authorization to make payments of capital credits.
Dr. 238.1, Patronage Capital Payable
Cr. 131.1, Cash—General.
To record actual cash payments of capital credits.

NOTE: To provide better control over the payment of patronage capital credits, a special checking account should be established in an amount equal to the authorized general retirement. Special prenumbered checks shall be used for each general retirement of patronage capital.

To strengthen internal control and to facilitate the settlement of estates, the board should adopt a policy specifying exactly how payments of capital credits shall be made to the estates of deceased patrons. Payments made to estates shall be recorded as follows:

Dr. 201.1, Patronage Capital Credits
Cr. 131.1, Cash—General
To record the payment of capital credits when an estate is settled by refunding 100 cents on the dollar.
Dr. 201.1, Patronage Capital Credits
Cr. 131.1, Cash—General
Cr. 217, Retired Capital Credits—Gain
To record the payment of capital credits when an estate is settled for less than the full amount of capital credited to the deceased customer's account.
Dr. 217, Retired Capital Credits—Gain
Cr. 201.2, Patronage Capital Assignable
To record the reallocation to current patrons of the amount of the discount, if provided for in the bylaws.

If a capital credit check is returned due to an inability to locate the patron, it shall be held pending a recheck of available records to ascertain the correct address of the patron. If it is determined that the patron cannot be located, the check shall be cancelled and the amount of the check debited to Account 131.1, Cash—General, and credited to Account 217, Retired Capital Credits—Gain. If the state, however, has unclaimed property laws to which the amount is subject, the amount shall be credited to Account 253, Other Deferred Credits, until final disposition has been made. A notation shall be made in the records of the former patron to facilitate payment if his or her whereabouts is subsequently determined.

If the records show that a number of former patrons have moved and left no forwarding address, it is not necessary to prepare a capital credit retirement check for these patrons when a general retirement of capital credits is made. When setting funds aside to make a general retirement, however, appropriate amounts shall be included to cover payments due these patrons. The cooperative shall then make a reasonable effort to locate these patrons through publication of their names in the newsletter or local newspaper. If the patrons are not located, the amounts set aside and the credits to their accounts shall be handled in a manner similar to those for whom payment checks are returned.

Under the standard bylaw provisions recommended by RUS, it is not proper to use capital credits that were assigned to former patrons to liquidate their delinquent bills. When the standard bylaws are in effect and collection efforts have failed, the balance of an uncollectible bill, after application of customers deposits and membership fees, shall be charged against the accumulated provision for uncollectible accounts. If the patron has capital credits assigned to him or her, these remain untouched except for a notation to indicate the amount of the unpaid bill. When a general retirement of capital credits is made at some future date, amounts which would otherwise be due the patron may be applied to satisfy the unpaid bill with the balance refunded to him or her.

503 Operating and Nonoperating Margins

Occasionally questions arise concerning the accounting for the balances in Accounts 218, Capital Gains and Losses; 219.3, Other Margins; 219.4, Other Margins and Equities-Prior Periods; 434,

Extraordinary Income; and 435, Extraordinary Deductions. The balance in these accounts shall be accounted for as follows:

1. The balance in Account 219.4, Other Margins and Equities—Prior Periods, shall be transferred, at year's end, to Account 219.1 or 219.2, as appropriate. Accounts 219.1 and 219.2 are then closed to Account 201.2, Patronage Capital Assignable, unless otherwise provided for in the bylaws.

2. The balances in Account 434, Extraordinary Income, and Account 435, Extraordinary Deductions, shall be cleared to Account 219.2 at year's end.

3. The balances in Account 219.3, Other Margins, and Account 218, Capital Gains and Losses, shall remain in these accounts unless they are allocated to patrons or used to absorb future losses as provided for in the bylaws of the cooperative.

When a cooperative is engaged in a major merchandising activity, all costs properly chargeable to the merchandising activity shall be allocated as such to offset the associated revenue. Nonoperating margins generated from this source shall be prorated annually on a patronage basis and credited to those patrons accounts from whom such amounts were obtained. Merchandising activities of this nature may require a bylaw provision allowing for the allocation of margins generated by a major merchandising activity separate from other operating or nonoperating margins.

If, at the time of the adoption of the bylaw provisions for the allocation of nonoperating margins, there are prior years' losses resulting in debit balances in Accounts 218, Capital Gains and Losses; 219.1, Operating Margins; 219.2, Nonoperating Margins; or 219.3, Other Margins; the credit balances in Accounts 218, 219.2, or 219.3 resulting from prior years' operations shall be transferred, to the extent necessary, to offset such deficits. If the board determines that amounts shall be allocated to prior years' patrons, the credit balances remaining in these accounts shall be transferred to Account 201.2, Patronage Capital Assignable.

If there are current year's losses resulting in debit balances in either Account 219.1 or 219.2, credit balances in Accounts 219.2, 219.3, and 218 shall be transferred, to the extent necessary, to offset such deficits. Remaining credit balances allocable to patrons shall be transferred to Account 1.2.

504 Patronage Capital from G&T Cooperatives

When a cooperative receives capital credits from a G&T cooperative, the transaction shall be recorded by a debit to Account 123.1, Patronage Capital from Associated Cooperatives, and a credit to Account 423, Generation and Transmission Cooperative Capital Credits. This entry shall be made priorto the closing of the cooperative's books even though, in most cases, the notice of the G&T allocation is not received until after the close of the year to which it relates. If precise information cannot be obtained from the G&T within a reasonable time, capital credits shall be recorded on an estimated basis. The difference between the estimated amount and the actual shall be recognized in the following year unless the difference is material.

A distribution cooperative shall not recognize its proportionate share of losses incurred by the G&T. G&T losses shall be accumulated and offset as provided for in the bylaws. Unlike distribution cooperatives, a G&T has the option to offset accumulated losses with future operating and/or nonoperating margins.

505 Patronage Capital Furnished by Other Cooperative Service Organizations

Utilities may obtain long-term and short-term loans, telephone or data processing services, or may purchase oil, gasoline, materials, insurance, and various items from cooperative or mutual enterprises. These enterprises often make patronage refunds or provide evidence that an amount equal to such a refund has been credited to the utility as an investment of capital. The refund may be in the form of cash in the year following the purchase or it may be deducted from the next invoice. The notice of patronage credited to the borrower's account may indicate that such capital may be retired at some future date upon certain conditions having been met. The following provides

the accounting journal entries for these types of transactions:

1. Insurance policy refunds from mutual companies, in cash or as credits against subsequent purchases, shall be credited to the appropriate expense account. If sufficient information is not available to credit the refunds to the appropriate expense accounts, they shall be credited to Account 165, Prepayments, and reduce premiums for the current year.

2. Patronage capital allocations from cooperatives, other than mutual insurance companies, shall be credited, in the year that the allocation notice is received, to Account 424, Other Capital Credits and Patronage Allocations, or to construction work-in-progress, as appropriate. The allocation of patronage capital credits between Account 424 and construction work-in-progress shall be made on an equitable basis. For example, patronage capital allocations received from a cooperative money lender are allocated between Account 424 and construction work-in-progress based upon the ratio of interest charged to construction for that particular lender to total interest expense incurred for that lender. Patronage capital allocations received from a material supplier are allocated based upon the ratio of materials charged to construction to total materials purchased.

3. The face amount of patronage capital certificates received by the cooperative from the purchase of goods or services from cooperative money lenders (CFC), oil dealers, material suppliers, pole treating plants, communications services, and others shall be charged to either Account 123.1, Patronage Capital from Associated Cooperatives, or Account 124, Other Investments, as appropriate. Account 123.1 shall include investments in only those cooperatives, or enterprises, that are directly related to the electric utility industry and controlled by the electric cooperatives. These include statewide cooperatives, power cooperatives, and NRECA. Other investments in oil cooperatives and insurance companies shall be charged to Account 124.

506 Forfeited Membership Fees

The bylaws of each cooperative prescribe certain rules and regulations concerning membership in the cooperative. Among these are provisions for forfeiture of membership fees. Some bylaws provide for application of membership fees against any unpaid accounts at the time of termination of service. Any remaining balance may be refunded to the member. Balances that cannot be refunded to the member due to an inability to locate the member or due to bylaw restriction, shall be credited to Account 208, Donated Capital, provided they do not escheat to the state. If disposition of the fees cannot be determined immediately, the amount involved shall be transferred to Account 253, Other Deferred Credits, until the determination is made.

601 Employee Benefits

The costs of employees' fringe benefits (hospitalization, retirement, holiday, sick and vacation pay, etc.) shall be accumulated in an appropriate clearing account and allocated monthly on the basis of payroll. Vacation costs shall be accrued monthly by appropriate credits to an accrual account. These monthly accruals shall be allocated on the basis of direct payroll costs to construction, retirement, and the applicable operations, maintenance, and administrative expense accounts.

Sick leave costs are not normally accrued unless the employee is entitled to be paid for accumulated sick leave at the termination of employment. Salary payments and the associated employee pensions and benefits and social security and other payroll taxes for an employee who is actually sick shall be charged to the same account or accounts to which his or her salary is normally charged.

602 Compensated Absences

Statement of Financial Accounting Standards No. 43, Accounting for Compensated Absences (Statement No. 43), requires employers to accrue a liability as an employee earns the right to be paid for future absences. Four criteria were established for this accrual:

1. The employer's obligation for payment for future absences is attributable to employees' services already performed.

2. The obligation relates to employee rights which vest or accumulate. Vested rights are considered those for which the employer is obligated to make payment even if the employee terminates. Rights which accumulate are those earned but unused rights to compensated absences which may be carried forward to one or more periods, subsequent to the period in which they are earned.

3. Payment of the compensation is probable.

4. The amount can be reasonably estimated.

A company's liability shall be estimated based upon payments it expects to make as a result of employees' work already performed. If a reasonable estimate cannot be made, the company shall disclose that fact in the financial statements.

Statement No. 43 does not apply to severance or termination pay, post-retirement benefits, deferred compensation, stock or stock options, group insurance, or other long-term fringe benefits.

The entries required to account for the accrual of compensated absences are as follows:

Dr. 435.1, Cumulative Effect on Prior Years of a Change in Accounting Principle
Cr. 242.3, Accrued Employees' Vacation and Holidays
To record the liability for benefits earned in prior years.

Dr. 107, Construction Work in Progress
Dr. 108.8, Retirement Work in Progress
Dr. Various Operations, Maintenance, and Administrative Expense Accounts
Cr. 242.3, Accrued Employees Vacation and Holidays
To record the liability for benefits earned in the current period.

603 Employee Retirement and Group Insurance

Some borrowers have group insurance or retirement plans or both for their employees. As a general rule the cost of these programs is borne partially by the cooperative and partially by its employees. The cooperative may pay the full cost in advance and recover the employee's share through payroll deductions. The accounting for these transactions is as follows:

1. The cooperative's advanced payment of premiums on insurance and retirement agreements shall be charged to Account 165, Prepayments, for the employers portion, and Account 143, Other Accounts Receivable, for the employee's portion.

2. The cost of the employer's portion of a retirement and group insurance program shall be charged to construction and retirement activities and the applicable operations, maintenance, and administrative expense accounts based upon a specific identification with employees' labor costs charged therein or, in the absence of specific employee identification, based upon direct labor dollars or direct labor hours depending upon which allocation technique provides the most equitable distribution of costs.

604 Deferred Compensation

Many utilities participate in the NRECA Deferred Compensation Program. Based upon the provisions of the program, the following accounting entries shall be made:

Dr. 186.XX, Miscellaneous Deferred Debits—Deferred Compensation
Cr. 228.3, Accumulated Provision for Pensions and Benefits
To increase the deferred compensation provision by the amount of the annual deposit to NRECA's Deferred Compensation Fund.

Dr. 128, Other Special Funds—Deferred Compensation
Cr. 131.1, Cash—General
To record the annual deposit to NRECA's Deferred Compensation Fund.

Dr. Construction Work in Progress, Retirement Work in Progress, or the Various Operations, Maintenance, and Administrative Expense Accounts, as appropriate.
Cr. 186.XX, Miscellaneous Deferred Debits—Deferred Compensation
To record monthly accrual of deferred compensation.

NOTE: If an employee joins the deferred compensation program during the year, use entry #1 to record the additional deposit to the NRECA Deferred Compensation Fund and increase the monthly accrual in entry #2 to reflect this deposit.

NRECA provides borrowers that participate in the deferred compensation

program with an annual account statement disclosing the activity for each Homestead Fund investment including the number of shares owned, interest income, dividend income, capital gains/losses, and the value of the shares owned at statement date. Funds may be invested in the Short-term Bond Fund, the Value Fund, the Short-term Government Securities Fund, and the Daily Income Fund. Depending upon the Homestead Fund selected, invested funds may earn interest and dividend income and may experience unrealized holding gains or losses. Based upon the information provided on the annual statement, the following journal entries shall be recorded to recognize the increase or decrease in the fund assets:

Dr. 128, Other Special Funds—Deferred Compensation
Cr. 419, Interest and Dividend Income
Cr. 421, Miscellaneous Nonoperating Income
To record an increase in the fund value as of December 31, 19xx, resulting from interest and dividend income and from unrecognized holding gains on trading securities.

Dr. Various Operations, Maintenance, and Administrative Expense Accounts
Cr. 228.3, Accumulated Provision for Pensions and Benefits
To record an increase in the liability to the employee resulting from an increase in the investment account.

Dr. 426.5, Other Deductions
Cr. 128, Other Special Funds—Deferred Compensation
To record a decrease in fund value as of December 31, 19xx, resulting from unrecognized holding losses on trading securities.

Dr. 228.3, Accumulated Provision for Pensions and Benefits
Cr. Various Operations, Maintenance, and Administrative Expense Accounts
To record a decrease in the liability to the employee resulting from a decrease in the investment account.

Payments made to participating employees because of retirement or separation for other reasons shall be recorded using the following entries:

Dr. 131.1, Cash—General
Cr. 128, Other Special Funds—Deferred Compensation
To record the receipt of funds from NRECA.

and

Dr. 228.3, Accumulated Provision for Pensions and Benefits
Cr. 131.1, Cash—General
To record payment to employee for deferred compensation.

If the borrower has elected to bear the market risk of the funds which guarantee that the amount of money an employee receives will not be less than the amount of salary deferred, the following entry shall be recorded if total payment(s) from NRECA are less than the amount of salary deferred:

Dr. Various Operations, Maintenance, and Administrative Expense Accounts
Cr. 131.1, Cash—General
To record payment to employee for deferred compensation. Payment was made because amount returned did not equal salary deferred.

Appropriate disclosure of the terms of the program shall be made in the notes to the financial statements.

605 Life Insurance Premium on Life of a Borrower Employee

Some borrowers insure the life of the manager and/or key employees with the borrower being named as the beneficiary. Such arrangements shall be accounted for as follows:

1. Charge Account 426.2, Life Insurance, for the net amount of the premium paid each year on the insurance policy.

2. At the anniversary date of the policy each year, charge Account 124, Other Investments, and credit Account 426.2, Life Insurance, with the amount of the annual increase in the cash surrender value of the policy; provided such increase is less than the net premium paid for that year. If the annual increase in the surrender value exceeds the net premium paid for the same year, only that portion of the surrender value increase equal to the net premium paid shall be credited to Account 426.2. The remainder is to be credited to Account 419, Interest and Dividend Income.

3. Upon retirement of the insured employee and surrender of the insurance policy, charge Account 131.1, Cash—General, and credit Account 124, Other Investments, for the amount received from the insurance company. If it is decided to grant to the retiring insured employee all, or any portion, of the cash received upon surrender of the policy, Account 926, Employee Pensions and Benefits, shall be charged

and Account 131.1 credited for the amount paid to the retiring employee.

4. If the insured employee dies within his term of service, charge Account 131.1, Cash—General, for the face amount of the policy paid by the insurance company. Credit Account 124, Other Investments, for the cash surrender value previously charged thereto, and credit the remainder to Account 421, Miscellaneous Nonoperating Income.

606 Pension Costs

With the issuance of Statement of Financial Accounting Standards No. 87, Employers' Accounting for Pensions (Statement No. 87), there have been significant changes in the accounting and reporting requirements relating to pension costs. This section will highlight the accounting and reporting requirements for the major types of pension plans. It should be noted, however, that the definitions and accounting procedures outlined in this section relate to financial accounting and they may differ from those used for tax accounting.

Defined Benefit Pension Plans

A defined benefit pension plan is a plan that defines an amount of pension benefit to be provided, usually as a function of one or more factors such as age, years of service, or compensation. In a defined benefit plan, the employer promises to provide, in addition to current wages, retirement income payments in future years after the employee retires or terminates service. Generally, the amount of benefit to be paid depends upon a number of future events that are incorporated into the plan's benefit formula, after including how long the employee and any survivors live, how many years of service the employee renders, and the employee's compensation in the years immediately before retirement or termination.

Under a defined benefit plan, the determination of pension costs, assets, liabilities, and the disclosures in the financial statements require many calculations and assumptions to be made. This section provides a general overview of the accounting and reporting requirements associated with a defined benefit pension plan. Consult Statement No. 87 for guidance in making the necessary calculations and assumption.

The accounting and reporting requirements related to a defined benefit pension plan are as follows:

1. The following components shall be included in the periodic recognition of net pension cost by an employer sponsoring a defined benefit pension plan:

a. The service cost component recognized in a period shall be determined as the actuarial present value of benefits attributed by the pension plan formula to employee service during that period. The measurement of the service cost component requires use of an attribution method and assumptions.

b. The interest cost component recognized in a period shall be determined as the increase in the projected benefit obligation due to the passage of time. Measuring the projected benefit obligation as a present value requires accrual of an interest cost at rates equal to the assumed discount rates.

c. For a funded plan, the actual return on plan assets, if any, shall be determined based upon the fair value of plan assets at the beginning and the end of the period, adjusted for contributions and benefit payments.

d. Plan amendments (including initiation of a plan) often include provisions that grant increased benefits based upon services rendered in prior period. Because plan amendments are granted with the expectation that the employer will realize economic benefits in future period, Statement No. 87 does not require the cost of providing such retroactive benefits (prior service cost) to be included in net periodic pension cost entirely in the year of the amendment but provides for recognition during the future service periods of those employees active at the date of the amendment who are expected to receive benefits under the plan.

The cost of retroactive benefits (including benefits that are granted to retirees) is the increase in the projected benefit obligation at the date of the amendment. Except as noted below, prior service cost shall be amortized by assigning an equal amount to each future period of service of each employee active at the date of the amendments who is expected to receive benefits

under the plan. If all or almost all of the plan's participants are inactive, the cost of retroactive plan amendments affecting benefits of inactive participants shall be amortized based upon the remaining life expectancy of those participants rather than the remaining service period.

To reduce the complexity and detail of the computations required, consistent use of an alternative amortization approach that more rapidly reduces the unrecognized cost of retroactive amendments is acceptable. For example, a straight-line amortization of the cost over the average remaining service period of employees expected to receive benefits under the plan is acceptable. The alternative method used shall be disclosed.

In some situations, a history of regular plan amendments and other evidence may indicate that the period during which the employee expects to realize economic benefits from an amendment granting retroactive benefits is shorter than the entire remaining service period of the active employees. Identification of such situations requires an assessment of the individual circumstances and the substance of the particular plan situation. In those circumstances, the amortization of prior service cost shall be accelerated to reflect the more rapid expiration of the employer's economic benefits and to recognize the cost in the periods benefited.

A plan amendment can reduce rather than increase the projected benefit obligation. Such a reduction shall be used to reduce an existing unrecognized prior service cost, and the excess, if any, shall be amortized on the same basis as the cost of benefit increases.

e. Gains and losses are changes in the amount of either the projected benefit obligation or plan assets resulting from experience different from that assumed and changes in assumptions. Gains and losses include amounts that have been realized. Because gains and losses may reflect refinements in estimates as well as real changes in economic values, and because some gains in one period may be offset by losses in another or vice versa, the recognition of gains and losses as components of net pension cost of the period in which they arise is not required.

The expected return on plan assets shall be determined based upon the expected long-term rate of return on plan assets and the market-related value of plan assets. The market-related value of plan assets shall be either fair value or a calculated value that recognizes changes in fair value in a systematic and rational manner over not more than 5 years. Different ways of calculating market-related value may be used for different classes of assets but the manner of determining market-related value shall be applied consistently from year to year for each asset class.

Asset gains and losses are the differences between the actual return on assets during a period and the expected return on assets for that period. Assets gains and losses include both changes reflected in the market-related value of assets and changes not yet reflected in the market-related value (that is, the difference between the fair value of assets and the market-related value). Asset gains and losses not yet reflected in market-related values are not required to be amortized.

As a minimum, amortization of an unrecognized gain or loss (excluding asset gains and losses not yet reflected in market-related value) shall be included as a component of net pension cost for a year if, as of the beginning of the year, that unrecognized net gain or loss exceeds 10 percent of the greater of the projected benefit obligation or the market-related value of plan assets. If amortization is required, the minimum amortization shall be that excess divided by the average remaining service period of active employees expected to receive benefits under the plan. If all or almost all of a plan's participants are inactive, the average remaining life expectancy of the inactive participants shall be used instead of average remaining service life.

Any systematic method of amortization of gains and losses may be used in lieu of the minimum specified in the previous paragraph provided that the minimum is used in any period in which the minimum is greater (i.e., reduces the net balance by more), the method is applied consistently, the

method is applied similarly to both gains and losses, and the method is disclosed.

The gain or loss component of net periodic pension cost shall consist of the difference between the actual return on plan assets and the expected return on plan assets and amortization of the unrecognized net gain or loss from previous periods.

2. A liability (unfunded accrued pension cost) shall be recognized if the net periodic pension cost recognized pursuant to Statement No. 87 exceeds amounts the employer has contributed to the plan. An asset (prepaid pension cost) shall be recognized if the net periodic pension cost is less than the amounts the employer has contributed to the plan.

If the accumulated benefit obligation exceeds the fair value of plan assets, the employer shall recognize a liability (including unfunded accrued pension cost) that is at least equal to the unfunded accumulated benefit obligation. Recognition of an additional minimum liability is required if an unfunded accumulated benefit obligation exists and an asset has been recognized as a prepaid pension cost, the liability already recognized as unfunded accrued pension cost is less than the unfunded accumulated benefit obligation, or no accrued or prepaid pension cost has been recognized.

If an additional minimum liability is recognized, an equal amount shall be recognized as an intangible asset, provided that the asset does not exceed the amount of unrecognized prior service cost. If an additional liability required to be recognized exceeds unrecognized prior service cost, the excess (which represents a net loss not yet recognized as a net periodic pension cost) shall be reported as a separate component (reduction) of equity.

When a new determination of the amount of additional liability is made to prepare a balance sheet, the related intangible asset and separate component of equity shall be eliminated or adjusted, as necessary.

3. An employer sponsoring a defined benefit pension plan shall disclose the following information:

a. A description of the plan including employee groups covered, type of benefit formula, funding policy, types of assets held and significant nonbenefit liabilities, if any, and the nature and effect of significant matters affecting comparability of information for all period presented.

b. The amount of net periodic pension cost for the period showing separately the service cost component, the interest cost component, the actual return on assets for the period, and the net total of other components.

c. A schedule reconciling the funded status of the plan with amounts reported in the employer's balance sheet, showing separately, the fair value of plan assets, the projected benefit obligation identifying the accumulated benefit obligation and the vested benefit obligation, the amount of unrecognized prior service cost, the amount of unrecognized net gain or loss including asset gains and losses not yet reflected in market-related value), the amount of any remaining unrecognized net obligation or net asset existing at the date of initial application of Statement No. 87, the amount of any additional liability recognized, and the amount of net pension asset or liability recognized in the balance sheet (which is the net result of combining the previous six items).

d. The weighted-average assumed discount rate and rate of compensation increase (if applicable) used to measure the projected benefit obligation and the weighted-average expected long-term rate of return on plan assets.

e. If applicable, the amount and type of securities of the employer and related parties included in plan assets, and the approximate amount of annual benefits of employees and retirees covered by annuity contracts issued by the employer and related parties. Also, if applicable, the alternative amortization periods used.

f. An employer that sponsors two or more separate defined benefit pension plans shall determine net periodic pension cost, liabilities, and assets by separately applying the provisions of Statement No. 87 to each plan. In particular, unless an employer clearly has a right to use the assets of one plan to pay benefits of another, a liability required to be recognized for one plan

shall not be reduced or eliminated because another plan has assets in excess of its accumulated benefit obligation or because the employer has prepaid pension cost related to another plan.

The required disclosures may be aggregated for all of an employer's single-employer defined benefit plans, or plans may be disaggregated into groups so as to provide the most useful information. Plans with assets in excess of the accumulated benefit obligation, however, shall not be aggregated with plans that have accumulated benefit obligations that exceed plan assets.

Annuity Contracts

An annuity contract is a contract in which an insurance company unconditionally undertakes a legal obligation to provide specified benefits to specific individuals in return for a fixed consideration or premium. An annuity contract is irrevocable and involves the transfer of significant risk from the employer to the insurance company. Some annuity contracts (participating annuity contracts) provide that the purchaser (either the plan or the employer) may participate in the experience of the insurance company. Under these contracts, the insurance company ordinarily pays dividends to the purchaser. If the substance of a participating contract is such that the employer remains subject to all or most of the risks and rewards associated with the benefit obligation covered and the assets transferred to the insurance company, that contract is not an annuity contract for purposes of Statement No. 87.

To the extent that benefits currently earned are covered by annuity contracts, the cost of these benefits shall be the cost of purchasing the contracts, except as noted below. That is, if all benefits attributed by the plan's benefits formula to service in the current period are covered by nonparticipating annuity contracts, the cost of the contracts determines the service cost component of net pension cost for that period.

Benefits provided by the pension benefit formula beyond benefits provided by annuity contracts (for example, benefits related to future compensation levels) shall be accounted for according to the provisions applicable to plans not involving insurance contracts.

Benefits covered by annuity contracts shall be excluded from the projected benefit obligation and the accumulated benefit obligation. Except as noted below, annuity contracts shall be excluded from plan assets.

Some annuity contracts provide that the purchaser (either the plan or the employer) may participate in the experience of the insurance company. Under these contracts, the insurance company ordinarily pays dividends to the purchaser, the effect of which is to reduce the cost of the plan. The purchase price of a participating annuity contract ordinarily is higher than the price of an equivalent contract without participation rights. The cost of the participation right shall be recognized, at the date of purchase, as an asset. In subsequent periods, the participation right shall be measured at its fair value if the contract is such that the fair value is reasonably estimable. Otherwise, the participation right shall be measured at its amortized cost (not in excess of its net realizable value), and the cost shall be amortized systematically over the expected dividend period under the contract.

Other Contracts with Insurance Companies

Insurance contracts that are, in substance, equivalent to the purchase of annuities shall be accounted for as such. Other contracts with insurance companies shall be accounted for as investments and measured at fair value. For some contracts, the best available evidence of fair value may be contract value. If a contract has a determinable cash surrender value or conversion value, that is presumed to be its fair value.

Defined Contribution Plans

A defined contribution pension plan is a plan that provides pension benefits in return for services rendered, provides an individual account for each participant, and has terms that specify how contributions to the individual's accounts are to be determined rather than the amount of pension benefits the individual is to receive. Under a defined contribution plan, the pension

benefits a participant will receive depend only upon the amount contributed to the participant's account, the returns earned on investments of those contributions, and forfeitures of other participants' benefits that may be allocated to the participant's account.

To the extent that a plan's defined contributions to an individual's account are to be made for periods in which that individual renders services, the net pension cost for a period shall be the contribution called for in that period. If a plan calls for contributions for periods after an individual retires or terminates, the estimated cost shall be accrued during the employee's service period.

An employer that sponsors one or more defined contribution plans shall disclose the following separately from its defined benefit plan disclosures:

1. A description of the plan(s) including employee groups covered, the basis for determining contributions, and the nature and effect of significant matters affecting comparability of information for all periods presented.

2. The amount of cost recognized during the period.

A pension plan having characteristics of both a defined benefit plan and a defined contribution plan requires careful analysis. If the substance of the plan is to provide a defined benefit, as may be the case with some ''target benefit'' plans, the accounting and disclosure requirements shall be determined in accordance with the provisions applicable to a defined benefit plan.

Multiemployer Plans

A multiemployer plan is a pension plan to which two or more unrelated employers contribute, usually pursuant to one or more collective-bargaining agreements. A characteristic of multiemployer plans is that assets contributed by one participating employer may be used to provide benefits to employees of other participating employers since assets contributed by an employer are not segregated in a separate account or restricted to provide benefits only to employees of that employer.

An employer participating in a multiemployer plan shall recognize as net pension cost, the required contribution for the period and shall recognize as a liability, any contributions due and unpaid. The required contribution includes both current costs and prior service costs. If an employer elects to fund prior service cost in full at the inception of the plan, the total payment becomes the employer's required contribution, and accordingly, its pension cost for the period.

The following provisions are applicable to RUS borrowers participating in a multiemployer pension plan:

1. An electric utility participating in a multiemployer plan may defer current period pension expenses if the provisions of Statement of Financial Accounting Standards No. 71 (Statement No. 71), Accounting for the Effects of Certain Types of Regulation, are applied.

Under the provisions of Statement No. 71, pension costs may be deferred provided such costs are recovered through future rates.

2. An electric utility instituting an amendment to the NRECA Retirement and Security plan enters into a contractual agreement to pay the costs incurred (prior service pension costs) for the amendment. In such cases, the agreement is noncancelable and payable regardless of continued participation in the plan.

Since the utility is unconditionally committed to making these payments and such payments are not contingent upon the utility's continued participation in the plan, the recognition of that liability is appropriate. The costs associated with this liability shall be expensed, in their entirety, when the liability is recognized.

The accounting journal entries required to record the transactions associated with a multiemployer pension plan are as follows:

Sample 1—Current Pension Expense

The journal entry required to record the normal costs associated with the NRECA Retirement and Security Program is as follows:

Dr. Various Operations, Maintenance, and Administrative Expense Accounts
Dr. 107, Construction Work-in-Progress
Dr. 108.8, Retirement Work-in-Progress
Cr. 131.1, Cash—General

To record the payment of pension costs to NRECA.

NOTE: This entry shall not be recorded during the moratorium.

Sample 2—Prior Service Pension Expense

The journal entries required to record the prior service costs associated with the NRECA Retirement and Security Program are as follows:

1. If the RUS borrower elects to pay the prior service pension costs in full, and there is no deferral of costs under the provision of Statement No. 71, the following entry shall be recorded:

Dr. Various Operations, Maintenance, and Administrative Expense Accounts
Dr. 107, Construction Work-in-Progress
Dr. 108.8, Retirement Work-in-Progress
Cr. 131.1, Cash—General
To record the payment of prior service pension costs to NRECA.

2. If the RUS borrower elects to finance prior service pension costs over a period of years and there is no deferral of costs under the provisions of Statement No. 71, the following entries shall be recorded:

Dr. Various Operations, Maintenance, and Administrative Expense Accounts
Dr. 107, Construction Work-in-Progress
Dr. 108.8, Retirement Work-in-Progress
Cr. 224, Other Long-Term Debt
To record the liability to NRECA for prior service pension costs.

Dr. 224, Other Long-Term Debt
Dr. 427, Interest on Long-Term Debt
Cr. 131.1, Cash—General
To record the annual payment to NRECA for prior service pension costs.

3. If the RUS borrower elects to finance prior service pension costs over a period of years and such costs are being deferred and amortized in accordance with the provisions of Statement No. 71, the following entries shall be recorded:

Dr. 182.3, Other Regulatory Assets
Cr. 224, Other Long-Term Debt
To record the liability to NRECA for prior service pension costs.

Dr. Various Operations, Maintenance, and Administrative Expense Accounts
Dr. 107, Construction Work-in-Progress
Dr. 108.8, Retirement Work-in-Progress
Cr. 182.3, Other Regulatory Assets
To record the amortization of deferred prior service pension costs.

Dr. 224, Other Long-Term Debt
Dr. 427, Interest on Long-Term Debt
Cr. 131.1, Cash—General
To record the annual payment to NRECA for prior service pension costs.

4. If the RUS borrower elects to pay the prior service pension costs in full and such costs are being deferred and amortized in accordance with the provisions of Statement No. 71, the following entries shall be recorded:

Dr. 182.3, Other Regulatory Assets
Cr. 131.1, Cash—General
To record the payment to NRECA for prior service pension costs.

Dr. Various Operations, Maintenance, and Administrative Expense Accounts
Dr. 107, Construction Work-in-Progress
Dr. 108.8, Retirement Work-in-Progress
Cr. 182.3, Other Regulatory Assets
To record the amortization of deferred prior service pension costs.

It should be noted that although the above entries relate specifically to the NRECA Retirement and Security Program, they are applicable to all multiemployer pension plans.

An employer that participates in one or more multiemployer plans shall disclose the following separately from disclosures for a single-employer plan:

1. A description of the multiemployer plan(s) including the employee groups covered, the type of benefits provided (defined benefit or defined contribution), and the nature and effect of significant matters affecting comparability of information for all periods presented.

2. The amount of cost recognized during the period.

Multiple-Employer Plans

A multiple-employer plan is, in substance, aggregations of single-employer plans combined to pool their assets for investment purposes to reduce the cost of plan administration. Under a multiple-employer plan, assets are segregated and specifically identified to an employer. In addition, such plans may have features that allow participating employers to have different benefit formulas. Such plans shall be considered single-employer plans for financial accounting purposes and each employer's accounting shall be based upon its respective interest in the plan.

607 Unproductive Time

Lost time relating to construction, operations and maintenance shall be allocated on the basis of direct payroll costs to the appropriate construction, operations or maintenance accounts in the month incurred. Lost time is defined as time on duty during which productive work is not performed due to inclement weather conditions, material shortages, machine repairs, or other reasons.

If lost time attributable to construction has a material effect on the construction accounts in any one month, these costs shall be deferred and distributed over a reasonable period of time by means of a predetermined percentage based upon direct labor.

608 Training Costs, Attendance at Meetings, Etc.

Utilities engage in many types of training programs. Seminars are conducted for directors, managers, office managers, attorneys, engineers, and others. Bookkeepers and office managers attend accountants' meetings. Safety engineers attend safety schools and subsequently conduct regular safety meetings at the cooperative. Costs incurred for the various types of training activities shall be accounted for as follows:

1. Managers' and directors' expenses to attend the NRECA national and state conventions shall be charged to Account 930.2, Miscellaneous General Expenses.

2. Management or engineering seminar fees, salary time attending such seminars including the associated pensions and benefits expense and payroll taxes, and the related per diem and expenses shall be charged to the functional expense accounts. Salaries paid to employees shall also be charged to the appropriate functional expense account. Fees and expenses for directors' attendance shall be charged to Account 930.2, Miscellaneous General Expenses.

3. When the office manager, bookkeeper, or work order clerk attends a state or regional accounting meeting, their salary time and the associated employee pensions and benefits and social security and other payroll taxes shall be charged to the account to which the employees' time is ordinarily charged.

4. Employees' salary time employee and the associated pensions and benefits and social security and other payroll taxes spent attending regular safety meetings conducted by the cooperative shall be charged to the account to which the employees' time is ordinarily charged.

5. A safety engineer's salary time and the associated employee pensions and benefits and social security and other payroll taxes spent attending a statewide safety school shall be charged to Account 925, Injuries and Damages.

6. The salary time and the associated employee pensions and benefits and social security and other payroll taxes spent by a manager or line foreman conducting weekly safely meetings shall be charged to the appropriate functional expense accounts including Account 590, Maintenance, Supervision and Engineering, and Account 920, Administrative and General Services.

609 Maintenance and Operations

''Operations'' is the general term used to describe activities involved in the delivery of electric service, by means of a distribution system, to the end user. It pertains to the use of the utility's electric plant facilities and does not include activities intended to prevent or remedy an impending or actual breakdown of those facilities. These activities are classified as maintenance.

''Maintenance'' is the general term used to describe the activities involved in the upkeep and repair, but not the enlargement or improvement, of property owned or leased and operated by the company. It does not include the replacement of retirement units.

610 Financial Forecast

Costs incurred and salaries paid to perform a 10-year financial forecast shall be charged to Account 920, Administrative and General Salaries. Related office supplies and expenses shall be charged to Account 921, Office Supplies and Expenses. When a forecast is performed by an outside consultant, the cost shall be charged to Account 923, Outside Services Employed.

611 Advertising Expense

The cost of advertising and the cost of informing the public about the electric cooperative's activities shall be charged to Account 930.2, Miscellaneous General Expenses.

Most of a cooperative's advertising is instructional in nature and relates the cooperative's history and current activities. This type of advertising activity should not be confused with that directed towards the enactment of a specific law or laws directed toward obtaining a specific decision from a regulatory body. Political advertising of the type defined above shall be charged to Account 426.4, Expenditures for Certain Civic, Political, and Related Activities.

612 Special Power Cost Study

A special power cost study is defined as a study to determine whether sufficient power will be available in the future. If additional power or power sources are needed, the study determines whether generation or purchase will supply the lesser cost. The study also indicates when additional power will be needed. As costs are incurred, they shall be charged to a subaccount of Account 186, Miscellaneous Deferred Debits. Upon completion of the study, the costs shall be charged to Account 557, Other Expenses, or amortized to Account 557 over a period of time not to exceed 5 years.

613 Mapping Costs

The purpose of posting completed work orders to system maps is to improve the operation of the system. These costs shall, therefore, be charged to Account 588, Miscellaneous Distribution Expenses. However, the cost of system mapping in the planning stage of construction is an acceptable overhead cost of the resulting construction.

614 Member Relations Costs

Many electric cooperatives hire employees whose duties concern a mixture of power use and member relations activities. The salaries for these employees shall be charged to Account 930.2, Miscellaneous General Expenses, except as provided below:

1. Account 912, Demonstrating and Selling Expenses, shall be charged with all labor, material, advertising, and other expenses incurred in promotional, demonstrating, and selling activities; the objective of which is to promote or retain the use of utility services by present or prospective customers.

2. Account 930.1, General Advertising Expenses, shall be charged with labor, material, and other expenses incurred in advertising and related activities, the cost of which by their content and purpose, are not provided for elsewhere.

3. Account 416, Costs and Expenses of Merchandising, Jobbing, and Contract Work, shall be charged with all costs specifically related to merchandising activities when the utility is engaged in a major merchandising program.

4. Account 426.4, Expenditures for Certain Civic, Political, and Related Activities, shall be charged with expenditures for the purpose of influencing public opinion with respect to the election or appointment of public officials, referenda, legislation, or ordinances (either with respect to the possible adoption of new referenda, legislation or ordinances or repeal or modification of existing referenda, legislation or ordinances); or approval, modification, or revocation of franchises; or for the purpose of influencing the decisions of public officials. Account 426.4 shall not include expenditures which are directly related to appearances before regulatory or other governmental bodies in connection with the borrower's existing or proposed operations.

615 Statewide Fees

Additional fees collected by a statewide association from its members for construction of a statewide building shall be charged to Account 930.2, Miscellaneous General Expenses. Any amounts that are to be repaid by the state association shall be charged to Account 143, Other Accounts Receivable, or Account 123.23, Other Investments in Associated Organizations, depending upon the terms of the repayment.

616 Power Supply/Distribution Cooperative Borrowings

When a power supply cooperative borrows money from a distribution cooperative as the result of a long-term loan agreement, the money shall be recorded on the books of the power supply cooperative as general funds unless restricted to a specific purpose. If restricted, the funds shall be recorded in Account 128, Other Special Funds. The resulting liability shall be recorded in Account 224, Other Long-Term Debt.

The transaction shall be charged to Account 123.23, Other Investments in Associated Organizations, on the books of the distribution cooperative.

617 Rate Discount Allowed by the Power Cooperative to Distribution Cooperatives Owning Connecting Transmission Lines

A distribution cooperative purchases power from a power cooperative. The distribution cooperative owns and operates the transmission line between the power cooperative's facilities and the distribution facilities. Because of this, power is sold at the standard rate at which the power cooperative sells to other distribution cooperatives who do not own their transmission lines, less a discount. The discount or reduction in rate is based upon the distribution cooperative's expense in operating and maintaining its transmission facilities. The contract between the power cooperative and the distribution cooperative must specifically state that the member shall receive a reduced rate or discount from the seller's rate to other member cooperatives.

Under this type of arrangement, the distribution cooperative shall record the cost of purchased power by charging the net amount to Account 555, Purchased Power.

618 Theft Losses not Covered by Insurance

Utilities may suffer losses as a result of thefts of cash, materials and supplies, equipment, or electric plant-in-service that is not covered by insurance. The charges for nominal uninsured losses shall be recorded in the following accounts:

1. Cash—Account 924, Property Insurance, shall be charged.

2. Plant materials and operating supplies—Account 163, Stores Expense Undistributed, shall be charged.

3. Equipment—Account 163, Stores Expense Undistributed, shall be charged for stores equipment; and Account 184, Transportation Expense—Clearing, for transportation and garage equipment. The appropriate miscellaneous operations or administrative expense account (Account 506, 524, 539, 549, 566, 588, 905, 910, 916, or 930.2, as appropriate) shall be charged for all other equipment.

4. Electric Plant-in-Service—A retirement work order shall be prepared for electric plant constituting a unit of property. The loss due to retirement shall be charged to Account 108.6, Accumulated Provision for Depreciation of Distribution Plant. If the plant does not constitute a retirement unit, the loss shall be charged to the appropriate maintenance expense account.

619 Self Billing

To maintain the books of accounts on an accrual basis, bills for customers who self bill and have not sent in a reading or remittance, shall be estimated. A journal entry shall be made to record the estimated revenue and kWh sold by debiting accounts receivable and crediting the appropriate revenue accounts. The estimated bill shall be posted to the customer's account and identified by an appropriate symbol indicating that it is an estimate. Reconciliation with the general ledger control is made in the usual manner.

620 Purchase Rebates

Some vendors from which electric cooperatives purchase plant materials and supplies and merchandise for resale are making purchase rebates based upon the quantity or dollar volume of purchases. These ''quantity discounts'' may be in the form of cash or credit memoranda, in the form of prepaid package travel arrangements, or a combination of such methods. The rebate shall be accounted for as a reduction in the cost of the material or appliances upon which it was based.

In some instances, the rebate may be for material or appliances that are no

longer in stock or cannot be identified. If the rebate is based upon the purchase of plant materials and operating supplies that are normally charged to Account 154, Plant Materials and Operating Supplies, a credit shall be made to Account 163, Stores Expense Undistributed. If the rebate is based upon appliances and equipment held for merchandising or contract work, the credit shall be spread over the items in Account 155, Merchandise. To avoid materially distorting the cost of the remaining appliances, if a portion of the items upon which the rebate was based are no longer in stock, a portion of the credit shall be prorated to Account 416, Cost and Expenses of Merchandising, Jobbing, and Contract Work, on the basis of the number of items sold to the quantity remaining in stock.

If the rebate is in the form of a travel package or travel arrangements, the value of the rebate shall be estimated and recorded as a reduction of the cost of the material or appliances upon which it was based in a manner similar to that of the cash rebates discussed above. The beneficiary of the travel or travel allowance shall be designated by or in accordance with policy established by the board of directors. The contra charge to the reduction in cost shall be to an appropriate account depending upon the relationship of the recipient to the cooperative. For employees, this shall be Account 926, Employee Pensions and Benefits; for directors or patrons, Account 930.2, Miscellaneous General Expenses.

621 Integrity Fund

The CFC Integrity Fund was established to assist borrowers in their attempts to stop takeover bids by investor-owned utilities. A borrower makes a contribution to the Integrity Fund in the form of cash or patronage capital refunds. CFC retains the contribution for a 5-year period during which time the borrower earns interest on the balance in its account. Each year, the borrower receives a statement indicating (both for the total fund and the individual borrower's share) the amount contributed, interest earned, disbursements made, and the ending balance. The disbursements from the fund are allocated to each contributing borrower's account based upon their individual account balances. At the end of the 5-year period, the balance in the account, if any, is refunded to the contributing borrower.

Since the contributing borrower will receive a refund only if its funds are not totally disbursed, the contribution shall be charged to expense in Account 426.1, Donations. If any part of the contribution is returned at the end of the 5-year period, the refund shall be credited to Account 421, Miscellaneous Nonoperating Income.

622 In-Substance Defeasance

An in-substance defeasance has been defined as the process whereby a debtor irrevocably places cash or other assets in a trust to be used solely for the purpose of satisfying scheduled payments of both principal and interest related to a specific debt obligation. Under the structural arrangements of an in-substance defeasance, the probability that the debtor will be required to make additional future debt payments is remote. In these specific circumstances, debt has been determined to be extinguished even though the debtor has not been legally released from his obligations under the debt instrument.

The trust established in a defeasance transaction is restricted as to the nature of the assets held. The trust must be funded with monetary assets that are essentially risk free as to the amount, timing, and collection of interest and principal. For debt denominated in United States dollars, ''risk free'' assets are limited to:

1. Direct obligations of the United States government;
2. Obligations guaranteed by the United States government; and
3. Securities that are backed by United States government obligations as collateral under an arrangement by which the interest and principal payments on the collateral, flow immediately through to the holder of the security.

The monetary assets of the trust must provide cash flows sufficient to coincide with the scheduled interest and principal payments on the defeased debt. If the trust is expected to pay the costs associated with the defeasance,

such as trustee fees, these costs must be considered in determining the amount of funds required by the trust.

The principles of in-substance defeasance apply only to debt with specific maturities and fixed payment schedules and, as such, do not apply to debt with variable terms in which advance determination of debt service requirements is not possible.

Generally accepted accounting principles (GAAP) address the extinguishment of debt in Accounting Principles Board Opinion No. 26, and Statement of Financial Accounting Standard No. 76, Extinguishment of Debt. In accordance with these two statements, debt which has been defeased remains recorded in the regulated books of account as do the assets placed in the irrevocable trust. They are not, however, recognized as an asset and liability for financial reporting purposes. The transaction, including the total amount of debt outstanding and the total amount of debt that is considered extinguished at the end of the period, must be disclosed in the footnotes to the financial statements as long as the debt remains outstanding.

Debt is frequently extinguished before its scheduled maturity. Debt may be extinguished by the use of the borrower's general funds, or by the reacquisition of another debt issue at a different interest rate or varying terms. As these assets are expected to be revenue producing during those years, both the assets and the revenue they generate may be utilized to meet maturing debt payments. Therefore, in most instances, the dollar value of the assets initially placed in the trust do not equal the dollar value of the outstanding principal balance. The difference represents an ''economic '' gain or loss to the borrower.

To provide consistency in reporting among all RUS borrowers, any gain or loss that is recognized for financial statement purposes should be reported in accordance with the provisions of General Instruction No. 17 of this part. Therefore, the gain or loss should be amortized (for reporting purposes) in equal monthly amounts over the remaining life of the original debt issue or the remaining life of the new issue. The gain or loss may be reported in the current period only in those instances in which it is immaterial to the financial statements.

The RUS Form 7, Financial and Statistical Report, and the RUS Form 12, Operating Report—Financial, must, however, reflect the actual amounts recorded in the books and records of the borrower.

623 Satellite or Cable Television Services

Many electric borrowers have become involved in either providing satellite or cable television services or obtaining satellite or cable television services for their own use. This section outlines the accounting to be followed when recording transactions involving satellite or cable television services.

1. *Separate Subsidiary*

If a borrower provides satellite or cable television services through a separate subsidiary, the investment in the subsidiary shall be recorded in Account 123.11, Investment in Subsidiary Companies. The net income or loss of the subsidiary shall be debited or credited to Account 123.11, as appropriate, with an offsetting entry to Account 418.1, Equity in Earnings of Subsidiary Companies.

2. *Segment of Current Operations*

If a borrower provides satellite or cable television services as part of its normal operations, the investment in satellite or cable television equipment shall be recorded in Account 121, Nonutility Property. All income associated with these services shall be recorded in Account 417, Revenues from Nonutility Operations, and the associated expenses shall be charged to Account 417.1, Expenses of Nonutility Operations.

3. *Sale and Installation of Satellite or Cable Television Equipment*

If a borrower sells or installs satellite or cable television equipment, the equipment purchased for resale shall be recorded in Account 156, Other Materials and Supplies, until sold. The revenues generated from such sales or installations shall be recorded in Account 415, Revenues from Merchandising, Jobbing, and Contract Work, and the associated expenses shall be

charged to Account 416, Costs and Expenses of Merchandising, Jobbing, and Contract Work.

4. *Equipment Purchased for Own Use*

If a borrower purchases satellite or cable television equipment for its own use, the investment in the equipment shall be recorded in Account 397, Communication Equipment.

624 Pollution Control Bonds

The construction and installation of pollution control facilities are often financed by issuing tax exempt municipal securities. The funds generated from the sale of these securities are deposited into an account that is controlled by a designated trustee. The funds under the control of the trustee are usually invested, earning interest, until they are needed.

Interest expense accrued on the pollution control bonds during the construction period shall be capitalized in Account 107, Construction Work-in-Progress. After construction is complete, all subsequent accruals of interest expense shall be charged to Account 427, Interest on Long-Term Debt.

Interest income earned during the construction period shall be recorded as a debit to Account 171, Interest and Dividends Receivable, and a credit to Account 107, Construction Work-in-Progress. Upon notification of receipt of the interest in the trustee account, Account 221.XX, Long-Term Debt—Pollution Control Bonds, shall be debited and Account 171, Interest and Dividends Receivable shall be credited. Upon completion of construction, Account 419, Interest and Dividend Income, shall be credited for the amount of interest income earned during the period.

The entries required to account for the transactions associated with the issuance of pollution control bonds are as follows:

Dr. 221.XX, Long-Term Debt—Pollution Control Bonds—Trustee
  Cr. Account 221.X1, Long-Term Debt—Pollution Control Bonds
To record the sale of pollution control bonds.
Dr. 107, Construction Work-in-Progress
  Cr. 232, Accounts Payable
To record costs incurred in construction of pollution control facilities.
Dr. 131.1, Cash—General Funds
  Cr. 221.XX, Long-Term Debt—Pollution Control Bonds—Trustee
To record the transfer of funds from the trustee.
Dr. 107, Construction Work-in-Progress
  Cr. 221.XX, Long-Term Debt—Pollution Control Bonds—Trustee
To record interest expense on pollution control bonds.
Dr. 171, Interest and Dividends Receivable
  Cr. 107, Construction Work-in-Progress
To record earnings from investments made by the trustee.
Dr. 221.XX, Long-Term Debt—Pollution Control Bonds—Trustee
  Cr. 171, Interest and Dividends Receivable
To record receipt of interest income by the trustee account.
Dr. XXX, Various Plant Accounts
  Cr. 107, Construction Work-in-Progress
To close completed construction to the primary plant accounts.

625 Prepayment of Debt

Many RUS borrowers have decided to redeem (prepay) their issues of long-term debt. As a result of this redemption, the borrower may incur a gain (discount) or a loss (penalty) on the early extinguishment of debt. The accounting for this gain or loss is highlighted in this section.

If debt is redeemed without refunding (paid with general funds), the gain or loss incurred shall be recorded in Account 189, Unamortized Loss on Reacquired Debt, or Account 257, Unamortized Gain on Reacquired Debt, as appropriate. The borrower shall amortize the recorded deferral on a monthly basis over the remaining life of the old debt issue. Amounts so amortized shall be charged to Account 428.1, Amortization of Loss on Reacquired Debt, or credited to Account 429.1, Amortization of Gain on Reacquired Debt—Credit, as appropriate.

If the debt is redeemed with refunding (refinanced), the gain or loss incurred shall be recorded in Account 189 or Account 257, as appropriate. The borrower may elect to account for the deferrals as follows:

1. Write them off immediately when the amounts are insignificant;

2. Amortize them by equal monthly amounts over the remaining life of the old debt issue; or

3. Amortize them by equal monthly amounts over the life of the new debt issue.

Once an election has been made, it shall be applied on a consistent basis. Regardless of the option selected, the amortization shall be charged to either Account 428.1 or 429.1, as appropriate.

Where a regulatory authority having jurisdiction over the borrower specifically disallows the rate principle of amortizing gains or losses on the redemption of long-term debt without refunding, and does not apply the gain or loss to interest charges in computing the borrower's rates, the alternative method may be used to account for gains or losses relating to the redemption of long-term debt with or without refunding. The alternative method requires that gains or losses be recorded in Account 421, Miscellaneous Nonoperating Income, or Account 426.5, Other Deductions, as incurred. When the alternative method is used, the borrower shall include a footnote to the financial statements stating the reason for using this method and its treatment for rate making purposes.

626 Rural Economic Development Loan and Grant Program

On December 21, 1987, Section 313, Cushion of Credits Payments Program, was added to the Rural Electrification Act. Section 313 establishes a Rural Economic Development Subaccount and authorizes the Administrator of the Rural Utilities Service to provide zero interest loans or grants to RE Act borrowers for the purpose of promoting rural economic development and job creation projects.

Subpart B, Rural Economic Development Loan and Grant Program, 7 CFR Part 1703, sets forth the policies and procedures relating to the zero interest loan program and for approving and administering grants.

The accounting journal entries required to record the transactions associated with a rural economic development loan are as follows:

Dr. 224.17, RUS Notes Executed—Economic Development—Debit
Cr. 224.16, Long-Term Debt—RUS Economic Development Notes Executed

To record the contractual obligation to RUS for the Economic Development Notes.

Dr. 131.12, Cash—General—Economic Development Funds
Cr. 224.17, RUS Notes Executed—Economic Development—Debit

To record the receipt of the economic development loan funds.

Dr. 123, Investment in Associated Organizations or
Dr. 124, Other Investments
Cr. 131.12, Cash—General—Economic Development Funds

To record the disbursement of Economic development loan funds to the project.

Dr. 131.1, Cash—General Funds
Cr. 421, Miscellaneous Nonoperating Income

To record payment received from the project for loan servicing charges.

Dr. 171, Interest and Dividends Receivable
Cr. 419, Interest and Dividend Income

To record the interest earned on the investment of rural economic development loan funds.

Dr. 426.1, Donations or
Dr. 426.5, Other Deductions
Cr. 131.1, Cash—General Funds

To record the payment of interest earned in excess of $500.00 on the investment of rural economic development loan funds.

NOTE: Interest earned in excess of $500.00 must be used for the rural economic development project for which the loan funds were received or returned to RUS.

Dr. 131.12, Cash—General—Economic Development Funds
Cr. 123, Investment in Associated Organizations or
Cr. 124, Other Investments

To record receipt of the repayment, by the project, of economic development loan funds.

Dr. 224.16, Long-Term Debt—RUS Economic Development Notes Executed
Cr. 131.12, Cash—General—Economic Development Funds

To record the repayment, to RUS, of the economic development loan funds.

The accounting journal entries required to record the transactions associated with a rural economic development grant are as follows:

Dr. 131.13, Cash—General—Economic Development Grant Funds
Cr. 224.18, Other Long-Term Debt—Grant Funds;
Cr. 208, Donated Capital; or
Cr. 421, Miscellaneous Nonoperating Income

To record grant funds disbursed by RUS. If the grant agreement requires repayment of the funds upon termination of the revolving loan program, Account 224.18 should be credited. If the grant agreement states that there is absolutely no obligation for repayment upon termination of the revolving loan program, the funds should be accounted for as a permanent infusion of capital by crediting Account 208. If, however, the grant agreement is silent as to the final disposition of the grant funds, Account 421 should be credited.

Dr. 123.3, Investment in Associated Organizations—Federal Economic Development Loans
Cr. 131.13, Cash—General—Economic Development Grant Funds

To record advances of Federal funds to associated organizations for authorized rural economic development projects.

Dr. 124.1, Other Investments—Federal Economic Development Loans
Cr. 131.13, Cash—General—Economic Development Grant Funds

To record advances of Federal funds to nonassociated organizations for authorized rural economic development projects.

Dr. 171, Interest and Dividends Receivable
Cr. 419, Interest and Dividend Income

To record the accrual of interest on loans made to associated and nonassociated organizations with Federal funds for authorized rural economic development projects.

Dr. 131.14, Cash—General—Economic Development Non-Federal Revolving Funds
Cr. 123.3, Investment in Associated Organizations—Federal Economic Development Loans or
Cr. 124.1, Other Investments—Federal Economic Development Loans

To record repayment of loans made with Federal funds.

Dr. 123.4, Investment in Associated Organizations—Non-Federal Economic Development Loans
Cr. 131.14, Cash—General—Economic Development Non-Federal Revolving Funds

To record advances of non-Federal funds to associated organizations for authorized rural economic development projects.

Dr. 124.2, Other Investments—Non-Federal Economic Development Loans
Cr. 131.14, Cash—General—Economic Development Non-Federal Revolving Funds

To record advances of non-Federal funds to nonassociated organizations for authorized rural economic development projects.

Dr. 171, Interest and Dividends Receivable
Cr. 419, Interest and Dividend Income

To record the accrual of interest on loans made to associated and nonassociated organizations with non-Federal funds for authorized rural economic development projects.

Dr. 131.14, Cash—General—Economic Development Non-Federal Revolving Funds
Cr. 123.4, Investment in Associated Organizations—Non-Federal Economic Development Loans or
Cr. 124.2, Other Investments—Non-Federal Economic Development Loans

To record repayment of loans made with non-Federal funds.

627 Postretirement Benefits

Statement of Financial Accounting Standards No. 106, Employers' Accounting for Postretirement Benefits Other than Pensions (Statement No. 106), requires reporting entities to accrue the expected cost of postretirement benefits during the years the employee provides service to the entity. For purposes of applying the provisions of Statement No. 106, members of the board of directors are considered to be employees of the cooperative. Prior to the issuance of Statement No. 106, most reporting entities accounted for postretirement benefit costs on a ''pay-as-you-go'' basis; that is, costs were recognized when paid, not when the

employee provided service to the entity in exchange for the benefits.

As defined in Statement No. 106, a postretirement benefit plan is a deferred compensation arrangement in which an employer promises to exchange future benefits for an employee's current services. Postretirement benefit plans may be funded or unfunded. Postretirement benefits include, but are not limited to, health care, life insurance, tuition assistance, day care, legal services, and housing subsidies provided outside of a pension plan.

This statement applies to both written plans and to plans whose existence is implied from a practice of paying postretirement benefits. An employer's practice of providing postretirement benefits to selected employees under individual contracts with specified terms determined on an employee-by-employee basis does not, however, constitute a postretirement benefit plan under the provisions of this statement.

Postretirement benefit plans generally fall into three categories: single-employer defined benefit plans, multiemployer plans, and multiple-employer plans.

The accounting requirements set forth in this interpretation focus on single-and multiple-employer plans. The accounting requirements set forth in Statement No. 106 for multiemployer plans or defined contribution plans shall be adopted for borrowers electing those types of plans.

Under the provisions of Statement No. 106, there are two components of the postretirement benefit cost: the current period cost and the transition obligation. The transition obligation is a one-time accrual of the costs resulting from services already provided. Statement No. 106 allows the transition obligation to be deferred and amortized on a straight-line basis over the average remaining service period of the active employees. If the average remaining service life of the employees is less than 20 years, a 20-year amortization period may be used.

Accounting Requirements

All RUS borrowers must adopt the accrual accounting provisions and reporting requirements set forth in Statement No. 106. The transition obligation and accrual of the current period cost must be based upon an actuarial study. This study must be updated to allow the borrower to comply with the measurement date requirements of Statement No. 106; however, the study must, at a minimum, be updated every five years. RUS will not allow electric borrowers to account for postretirement benefits on a ''pay-as-you-go'' basis.

The deferral and amortization of the transition obligation does not require RUS approval provided that it complies with the provisions of Statement No. 106. If, however, a borrower elects to expense the transition obligation in the current period and subsequently defer this expense in accordance with Statement of Financial Accounting Standards No. 71, Accounting for the Effects of Certain Types of Regulation, the deferral must be approved by RUS. In those states in which the commission will not allow the recovery of the transition obligation through future rates, the transition obligation must be expensed, in its entirety, in the year in which Statement No. 106 is adopted. A portion of the transition obligation may be charged to construction and retirement activities provided such charges are properly supported.

Effective Date and Implementation

For plans outside the United States and for defined benefit plans of employers that (a) are nonpublic enterprises and (b) sponsor defined benefit postretirement plans with no more than 500 plan participants in the aggregate, Statement No. 106 is effective for fiscal years beginning after December 15, 1994. For all other plans, Statement No. 106 is effective for fiscal years beginning after December 15, 1992.

RUS borrowers must comply with the implementation dates set forth in Statement No. 106. At the time of the adoption of Statement No. 106, rates must be in place sufficient to recover the current period expense and any amortization of the transition obligation. A copy of a board resolution or commission order, as appropriate, indicating that the transition obligation and

current period expense have been included in the borrower's rates must be submitted to RUS.

Accounting Journal Entries—Transition Obligation

The journal entries required to record the transition obligation are as follows:

1. If the borrower elects to expense the transition obligation in the current period and there is no deferral of costs, the following entry shall be recorded:

Dr. 435.1, Cumulative Effect on Prior Years of a Change in Accounting Principle

or

Dr. 926, Employee Pensions and Benefits
Dr. 107, Construction Work-in-Progress
Dr. 108.8, Retirement Work-in-Progress
Cr. 228.3, Accumulated Provision for Pensions and Benefits
To record the current period recognition of the transition obligation for postretirement benefits. Note: A portion of the transition obligation may be charged to construction and retirement activities provided such charges are properly supported.

2. If the borrower elects to defer and amortize the transition obligation in accordance with the provisions of Statement No. 71, the following entry shall be recorded:

Dr. 182.3, Other Regulatory Assets
Cr. 228.3, Accumulated Provision for Pensions and Benefits
To record the deferral of the transition obligation under the provisions of Statement No. 71.

Dr. Various Operations, Maintenance, and Administrative Expense Accounts
Dr. 107, Construction Work-in-Progress
Dr. 108.8, Retirement Work-in-Progress
Cr. 182.3, Other Regulatory Assets
To record the amortization of postretirement benefits expenses as they are recovered through rates in accordance with Statement No. 71.

3. The deferral and amortization of the transition obligation under the provisions of Statement No. 106 is considered to be an off balance sheet item. If, therefore, the borrower elects to defer and amortize the transition obligation on a straight-line basis over the average remaining service period of the active employees or 20 years in accordance with Statement No. 106, no entry is required. Instead, the transition obligation is recognized as a component of postretirement benefit cost as it is amortized. It should be noted, however, that the amount of the unamortized transition obligation must be disclosed in the notes to the financial statements.

Accounting Journal Entries—Current Period Expense

The current period postretirement expense should be recorded by the following entry:

Dr. Various Operations, Maintenance, and Administrative Expense Accounts
Dr. 107, Construction Work-in-Progress
Dr. 108.8, Retirement Work-in-Progress
Cr. 228.3, Accumulated Provision for Pensions and Benefits
To record current period postretirement benefit expense.
Dr. 228.3X, Accumulated Provision for Pensions and Benefits—Funded
Cr. 131.1, Cash—General
To record cash payments on a ''pay-as-you-go'' basis for postretirement benefits.

Accounting Journal Entry—Funding

If a borrower elects to voluntarily fund its postretirement benefits obligation in an external, irrevocable trust, the following entry shall be recorded:

Dr. 228.3X, Accumulated Provision for Pensions and Benefits—Funded
Cr. 131.1, Cash—General
To record the funding of postretirement benefits expense into an external, irrevocable trust.

If a borrower elects to voluntarily fund its postretirement benefits obligation in an investment vehicle other than an external, irrevocable trust, the following entry shall be recorded:

Dr. 128, Other Special Funds
Cr. 131.1, Cash—General
To record the funding of postretirement benefits expense into an investment vehicle other than an external, irrevocable trust.

628 Postemployment Benefits

Statement of Financial Accounting Standards No. 112, Employers' Accounting for Postemployment Benefits (Statement No. 112) establishes the standards of financial accounting and reporting for employers who provide benefits to former or inactive employees after employment but before retirement. Inactive employees are those who are not currently rendering service to the employer but who have not

been terminated, including employees who are on disability leave, regardless of whether they are expected to return to active service. For purposes of applying the provisions of Statement No. 112, former members of the board of directors are considered to be employees of the cooperative.

Postemployment benefits include benefits provided to former or inactive employees, their beneficiaries, and covered dependents. They include, but are not limited to, salary continuation, supplemental benefits (including workmen's compensation), health care, job training and counseling, and life insurance coverage. Benefits may be provided in cash or in kind and may be paid upon cessation of active employment or over a specified period of time.

The cost of providing postemployment benefits is considered to be a part of the compensation provided to an employee in exchange for current service and should, therefore, be accrued as the employee earns the right to be paid for future postemployment benefits. Applying the criteria set forth in Statement of Financial Accounting Standards No. 43, Accounting for Compensated Absences, a postemployment benefit obligation is accrued when all of the following conditions are met:

1. The employer's obligation for payment for future absences is attributable to employees' services already performed;

2. The obligation relates to employee rights that vest or accumulate. Vested rights are considered those rights for which the employer is obligated to make payment even if the employee terminates. Rights that accumulate are those earned, but unused rights to compensated absences that may be carried forward to one or more periods subsequent to the period in which they are earned;

3. Payment of the compensation is probable; and

4. The amount can be reasonably estimated.

If all of these conditions are not met, the employer must account for its postemployment benefit obligation in accordance with Statement of Financial Accounting Standards No. 5, Accounting for Contingencies (Statement No. 5) when it becomes probable that a liability has been incurred and the amount of that liability can be reasonably estimated.

If an obligation for postemployment benefits is not accrued in accordance with the provisions of Statement No. 5 or Statement No. 43 only because the amount cannot be reasonably estimated, the financial statements should disclose that fact.

Accounting Requirements

All RUS borrowers must adopt the accrual accounting provisions and reporting requirements set forth in Statement No. 112 as of the statement's implementation date. A portion of the cumulative effect may be charged to construction and retirement activities provided such charges are properly supported. If a borrower elects to defer the cumulative effect of implementing Statement No. 112 in accordance with the provisions of Statement of Financial Accounting Standards No. 71, Accounting for the Effects of Certain Types of Regulation, the deferral must be approved by RUS.

Effective Date and Implementation

Statement No. 112 is effective for fiscal years beginning after December 15, 1993. Previously issued financial statements should not be restated.

RUS borrowers must comply with the implementation date set forth in Statement No. 112. At the time of the adoption of Statement No. 112, rates must be in place sufficient to recover the current period expense.

Accounting Journal Entries

The journal entries required to account for postemployment benefits are as follows:

Dr. 435.1, Cumulative Effect on Prior Years of a Change in Accounting Principle
Dr. 107, Construction Work in Progress
Dr. 108.8, Retirement Work in Progress
Cr. 228.3, Accumulated Provision for Pensions and Benefits
To record the cumulative effect of implementing Statement No. 112.

NOTE: A portion of the cumulative effect may be charged to construction and retirement activities provided such charges are

properly supported. Account 435.1 is closed to Account 219.2, Nonoperating Margins.

If the borrower elects to defer and amortize the cumulative effect in accordance with the provisions of Statement No. 71, the following entry shall be recorded:

Dr. 182.3, Other Regulatory Assets
Cr. 228.3, Accumulated Provision for Pensions and Benefits
To record the deferral of the cumulative effect of implementing Statement No. 112 in accordance with the provisions of Statement No. 71.

Dr. Various Operations, Maintenance, and Administrative Expense Accounts
Dr. 107, Construction Work in Progress
Dr. 108.8, Retirement Work in Progress
Cr. 182.3, Other Regulatory Assets
To record the amortization of the cumulative effect of implementing Statement No. 112 as it is recovered through rates in accordance with Statement No. 71.

Dr. Various Operations, Maintenance, and Administrative Expense Accounts
Dr. 107, Construction Work in Progress
Dr. 108.8, Retirement Work in Progress
Cr. 228.3, Accumulated Provision for Pensions and Benefits
To record current period postemployment benefit expense.

NOTE: If postemployment benefits are accrued under the criteria set forth in Statement No. 43, this journal entry is made on a monthly basis. If, however, the accrual is based upon the provisions of Statement No. 5, this is a one-time entry unless the liability is reevaluated and subsequently adjusted.

629 Investments in Debt and Equity Securities

Statement of Financial Accounting Standards No. 115, Accounting for Certain Investments in Debt and Equity Securities (Statement No. 115), establishes the standards of financial accounting and reporting for investments in debt securities and for investments in equity securities that have readily determinable fair values. Statement No. 115 does not apply to investments in equity securities accounted for under the equity method nor to investments in consolidated subsidiaries.

At the time of acquisition, an entity must classify debt and equity securities into one of three categories: held-to-maturity, available-for-sale, or trading. At the balance sheet date, the appropriateness of the classifications must be reassessed.

Investments in debt securities are classified as held-to-maturity and are measured at amortized cost in the balance sheet only if the reporting entity has the positive intent and ability to hold these securities to maturity. Debt securities are not classified as held-to-maturity if the entity has the intent to hold the security only for an indefinite period; for example, if the security would become available for sale in response to changes in market interest rates and related changes in the security's prepayment risk, needs for liquidity, changes in the availability of and the yield on alternative investments, changes in funding sources and terms, and changes in foreign currency risk.

Investments in debt securities that are not classified as held-to-maturity and equity securities that have readily determinable fair values are classified as either trading securities or available-for-sale securities and are measured at fair value in the balance sheet. Trading securities are those securities that are bought and held principally for the purpose of selling them in the near future. Trading generally reflects active and frequent buying and selling and trading securities are generally used with the objective of generating profits on short-term differences in prices. Available-for-sale securities are those investments not classified as either trading securities or held-to-maturity securities.

Statement No. 115 requires unrealized holding gains and losses for trading securities to be included in earnings in the current period. Unrealized holding gains and losses for available-for-sale securities are excluded from earnings; however, they are reported as a net amount in a separate component of shareholders' equity until realized.

For individual securities classified as either available-for sale or held-to-maturity, an entity must determine whether a decline in the security's fair value below the amortized cost is other than temporary. If the decline in fair value is determined to be permanent, that is, it is probable that the entity will not be able to collect all amounts due under the contractual terms of the

security, the realized loss is accounted for in earnings of the current period. The new cost basis is not adjusted upward for subsequent recoveries in the fair value. Subsequent increases in the fair value of available-for-sale securities are included in the separate component of equity. Subsequent decreases are also included in the separate component of equity.

All trading securities are reported as current assets in the balance sheet and individual held-to-maturity and available-for-sale securities are classified as either current or noncurrent, as appropriate. Cash flows from the purchase, sale, or maturity of available-for-sale securities and held-to-maturity securities are classified in the statement of cash flows as cash flows from investing activities and reported gross for each security classification.

Accounting Requirements

All RUS borrowers must adopt the accounting, reporting, and disclosure requirements set forth in Statement No. 115 as of the statement's implementation date. Unrealized holding gains or losses for trading securities shall be recorded in either Account 421, Miscellaneous Nonoperating Income, or Account 426.5, Other Deductions, as appropriate. Unrealized holding gains or losses for available-for-sale securities held by the corporate entity are recognized as a component of stockholder's equity in Account 215.1, Unrealized Gains and Losses—Debt and Equity Securities. A contra account of the investment account shall be debited or credited accordingly. Unrealized gains and losses for available-for-sale securities held in a decommissioning fund shall increase or decrease, as appropriate, the reported value of the fund.

Effective Date and Implementation

Statement No. 115 is effective for fiscal years beginning after December 15, 1993. At the beginning of the entity's fiscal year, the entity must classify its debt and equity securities on the basis of the entity's current intent. This statement may not be applied retroactively to prior years' financial statements. For fiscal years beginning prior to December 16, 1993, reporting entities are permitted to apply Statement No. 115 as of the end of a fiscal year for which annual financial statements have not previously been issued.

630 Split Dollar Life Insurance

The National Rural Electric Cooperative Association Split Dollar Life Insurance provides life insurance benefits to cooperative employees. The benefits provided under this policy consist of two components, the face value of the insurance policy and the accumulated cash surrender value. While the employee is the owner of the policy, the employee must sign a collateral assignment giving the cooperative absolute right to the cash surrender value of the policy. Under the terms of this collateral assignment, the employee must reimburse the cooperative for the premiums paid upon the employee's termination of employment or attainment of the age of 62 if the employee wishes to maintain the insurance coverage. If death occurs prior to either of these events, the premiums paid to date by the cooperative are deducted from the death benefits payable to the policy beneficiary.

Accounting Requirements

Financial Accounting Standards Board Technical Bulletin 85–4, Accounting for Purchase of Life Insurance (Bulletin 85–4), states that the amount that could be realized under an insurance contract as of the date of the financial statements should be reported as an asset. The change in the cash surrender or contract value of that asset during the period should be reported as an adjustment to the premiums paid in determining the expense or income to be recognized for the period. The cooperative shall, therefore, record the cash surrender value of the policy as an asset because of its absolute right to receive that value based upon the employee's collateral assignment. Any receivable that may occur as a result of the employee reimbursement for the premiums paid is contingent upon the employee electing to maintain the insurance coverage after termination of employment or reaching the age of 62 and is not recorded as an asset on the cooperative's records.

Accounting Journal Entries

The journal entries required to account for the NRECA Split Dollar Life Insurance Program are as follows:

Dr. 124, Other Investments
Cr. Various Operations, Maintenance, and Administrative Expense Accounts
To record an increase in the cash surrender value of the insurance contract.

or

Dr. Various Operations, Maintenance, and Administrative Expense Accounts
Cr. 124, Other Investments
To record a decrease in the cash surrender value of the insurance contract.

Dr. Various Operations, Maintenance, and Administrative Expense Accounts
Dr. 107, Construction Work-in-Progress
Dr. 108.8, Retirement Work-in-Progress
Cr. 131.1, Cash—General
To record the premium cost of the insurance contract.

631 Special Early Retirement Plan

The Special Early Retirement Plan (SERP) being offered through the National Rural Electric Cooperative Association (NRECA) constitutes an amendment to its Retirement and Security (R&S) program. The SERP is often chosen as a vehicle through which the cooperative may reduce the size of its workforce or replace more highly paid employees with lower paid entry level employees. If an employee covered by an NRECA retirement plan chose to retire before his/her normal retirement date, that employee would receive an actuarially reduced benefit. However, when a cooperative elects to offer a SERP, no such reduction is required. The cooperative selects the criteria under which an employee will be eligible to participate such as age, years of service, or a combination of age and benefit service requirements. As with other amendments to the R&S program, NRECA calculates the cost of the plan based upon the criteria selected by the cooperative and allows the cooperative to pay the cost immediately or on an installment basis.

Under this plan, the employee receives full retirement benefits in the form of either an immediate lump-sum settlement or annuity payments. It is not unusual for the cooperative to add an incentive to encourage participation such as medical or life insurance, either in whole or in part, until age 65. The actuarial analysis provided by NRECA includes the cost of the SERP and the estimated reduction and/or increase in costs associated with Statement of Financial Accounting Standards No. 106, Employer's Accounting for Postretirement Benefits Other Than Pensions (Statement No. 106).

Statement of Financial Accounting Standards No. 87, Employer's Accounting for Pensions (Statement No. 87)

In accordance with the provisions of Statement No. 87, the costs associated with an amendment to a multiemployer plan are recognized when they become due and payable. Since NRECA calculates the amount due and payable at the time of the amendment, the entire amount due, whether paid immediately or financed through NRECA or any other institution, must be recognized as an expense at that time. This cost may, however, be deferred in accordance with the provisions of Statement of Financial Accounting Standards No. 71, Accounting for the Effects of Certain Types of Regulation (Statement No. 71).

Accounting Journal Entries

The journal entry required to record the additional pension costs associated with the SERP is as follows:

Dr. Various Operations, Maintenance, and Administrative Expense Accounts
Dr. 107, Construction Work-in-Progress
Dr. 108.8, Retirement Work-in-Progress
Cr. 131.1, Cash—General

or

Cr. 224, Other Long-Term Debt
To record the prior service pension costs incurred as a result of adopting the SERP.

If the borrower elects to defer and amortize the cost in accordance with Statement No. 71, the following entries shall be recorded:

Dr. 182.3, Other Regulatory Assets
Cr. 131.1, Cash—General

or

Cr. 224, Other Long-Term Debt
To record, under the provisions of Statement No. 71, the deferral of the prior service pension costs incurred as a result of adopting the SERP.

Dr. Various Operations, Maintenance, and Administrative Expense Accounts

Dr. 107, Construction Work-in-Progress
Dr. 108.8, Retirement Work-in-Progress
Cr. 182.3, Other Regulatory Assets
To record the amortization of deferred prior service pension costs as they are recovered through rates in accordance with Statement No. 71.

Statement No. 106

In the event that net reductions in postretirement benefits result from this plan amendment, the reductions are recognized as follows:

1. The amount of the reduction shall first reduce any existing unrecognized prior service cost;

2. Any remaining reductions shall next reduce any unrecognized transition obligation; and

3. Any remaining reduction shall be recognized in a manner consistent with the accounting for prior service postretirement benefit costs.

In accordance with Statement No. 106, prior service postretirement benefit costs are recognized in equal amounts in each remaining year of service for active plan participants. Because it is an off-balance sheet item, only a memorandum entry is required to reduce the amount of unrecognized prior service cost.

At adoption, Statement No. 106 permitted the recognition of the transition obligation in one of two ways. The transition obligation was recognized over the longer of the average remaining service period of current plan participants or 20 years, or it may have been recognized immediately. If the delayed recognition option was chosen under Statement No. 106, this, too, was an off-balance sheet item that requires only a memorandum entry to reduce the amount of unrecognized transition obligation. However, if the immediate recognition option was chosen, the cooperative either recorded the expense in that year or, with RUS approval, deferred the expense under the provisions of Statement No. 71. If the expense were recorded, in total, in the year of adoption, no unrecognized transition obligation remains to reduce. If, however, the transition obligation was deferred in accordance with Statement No. 71, the journal entry required to effect the reduction in Statement No. 106 expense is as follows:

Dr. 228.3, Accumulated Provision for Pensions and Benefits
Cr. 182.3, Other Regulatory Assets
To record a reduction in the deferred Statement No. 106 transition obligation resulting from the adoption of the SERP.

NOTE: The dollar value of this entry must not exceed the deferral shown on the balance sheet.

If, after the two previous reductions have been made, any net credit remains, it shall be recognized in a manner consistent with prior service costs; that is, as an off balance sheet item that is amortized over the remaining service lives (to full eligibility) of the active plan participants. The annual amortization reduces amounts normally charged to the various operations, maintenance, and administrative expense accounts and Account 228.3 as postretirement benefit expenses.

[58 FR 59825, Nov. 10, 1993, as amended at 59 FR 27436, May 27, 1994; 60 FR 55430, 55435–55438, Nov. 1, 1995; 62 FR 42319–42321, 42323, 42330, Aug. 6, 1997]

§§ 1767.42—1767.45 [Reserved]

Subpart C—Depreciation Rates and Procedures [Reserved]

§§ 1767.46—1767.65 [Reserved]

Subpart D—Preservation of Records [Reserved]

§§ 1767.66—1767.85 [Reserved]

PART 1770—ACCOUNTING REQUIREMENTS FOR RUS TELEPHONE BORROWERS

Subpart A—General Provisions

Sec.
1770.1—1770.9 [Reserved]

Subpart B—Uniform System of Accounts

1770.10 General.
1770.11 Accounting system requirements.
1770.12 Supplementary accounts.
1770.13 Accounting requirements.
1770.14 Continuing property records.
1770.15 Supplementary accounts required of all borrowers.
1770.16 Supplementary accounts required of nonprofit organizations.

1770.17—1770.25 [Reserved]

Subpart C—Accounting Interpretations

1770.26 General.
1770.27 Definitions.
1770.28–1770.45 [Reserved]

APPENDIX TO SUBPART C TO PART 1770—ACCOUNTING METHODS AND PROCEDURES REQUIRED OF ALL BORROWERS

AUTHORITY: 7 U.S.C. 901 *et seq.*; 7 U.S.C. 1921 *et seq.*; Pub. L. 103–354, 108 Stat. 3178 (7 U.S.C. 6941 *et seq.*).

SOURCE: 55 FR 3388, Feb. 1, 1990, unless otherwise noted.

Subpart A—General Provisions

§§1770.1—1770.9 [Reserved]

Subpart B—Uniform System of Accounts

§1770.10 General.

This subpart implements provisions of the standard RUS loan documents with respect to the accounting system accounts to be maintained by telecommunications borrowers of the Rural Utilities Service.

§1770.11 Accounting system requirements.

(a) Each RUS borrower subject to the jurisdiction of the Federal Communications Commission (FCC) or a State regulatory body shall maintain its accounts and records in accordance with the rules and regulations prescribed by that regulatory body.

(b) Each RUS borrower not subject to regulatory control as specified in §1770.11(a) shall maintain its accounts and records in accordance with the FCC Uniform System of Accounts as set forth in part 32 of the Commission's Rules and Regulations.

(1) RUS borrowers having annual revenues derived from regulated telecommunications operations of $100,000,000 or more shall maintain the accounts prescribed in part 32 for Class A companies.

(2) RUS borrowers having annual revenues derived from regulated telecommunications operations of less than $100,000,000 shall maintain the accounts prescribed in part 32 for Class B companies.

(3) RUS borrowers maintaining the accounts prescribed for Class B companies may adopt the Class A accounts if they desire more detailed and sophisticated accounting records.

§1770.12 Supplementary accounts.

(a) All borrowers shall maintain the supplementary accounts set forth in §1770.15. These accounts conform in number and title with accounts prescribed in the FCC Uniform System of Accounts. In those instances in which a State regulatory body having jurisdiction over an RUS borrower has prescribed a system of accounts differing from that of the FCC, the account titles prescribed by RUS in §1770.15 shall remain unchanged; however, the supplementary account numbers shall be changed to conform with the State's accounting system.

(b) In addition to the accounts set forth in §1770.15, cooperative or other nonprofit borrowers shall maintain the supplementary accounts set forth in §1770.16.

(c) Borrowers are permitted to deviate from the specific subaccount numbers detailed in §§1770.15 and 1770.16 provided that the primary account numbers and account descriptions conform with those prescribed.

(Approved by the Office of Management and Budget under control number 0572–0003)

§1770.13 Accounting requirements.

(a) Each borrower shall maintain its books of accounts on the accrual basis of accounting. All transactions shall be recorded in the period in which they occur and reconciled monthly. The books of accounts shall be closed at the end of each fiscal year and financial statements shall be prepared for the period and audited in accordance with the provisions of 7 CFR part 1773, RUS Policy on Audits of Electric and Telephone Borrowers.

(b) All books of accounts, records, and memoranda shall be maintained in such a manner as to fully support the journal entries to which they relate. The books and records referred to herein shall include records of a nontechnical nature such as minute books, stock and membership records, reports, correspondence, and memoranda.

(c) Interpretations of Federal or State requirements shall be referred to the applicable commission exercising jurisdiction over the borrower.

(d) Interpretations of RUS accounting requirements shall be referred to the appropriate Telephone Area office of RUS.

§ 1770.14 Continuing property records.

Each borrower shall maintain continuing property records which detail the date of placement, location, description of property, and the original cost of the property record units. The continuing property record and other underlying records of construction costs shall be maintained so that upon retirement of one or more retirement units or of minor items without replacement when not included in the costs of retirement units, the actual cost of the plant retired can be determined.

§ 1770.15 Supplementary accounts required of all borrowers.

Accounts prescribed in the Stockholders' Equity and Patronage Capital section shall be maintained by stock companies and cooperatives as appropriate.

Class of company		Account title
Account No.		
A	B	
		Current Assets
1130.1	1120.11	Cash—General Fund.
1130.2	1120.12	Cash—Construction Fund Trustee.
1130.3	1120.13	Cash—Transfer of Funds.
	1120.21	Special Cash Deposits.
1150.1	1120.31	*Petty Cash Fund*
		This account shall include funds in the custody of employees or agents for making minor disbursements. The fund shall be operated on an imprest basis. Expenditures shall be supported by receipts, and reimbursements to the fund shall be for the exact amount of such expenditures and shall be charged to the various accounts to which the expenditures are allocable. At all times, the total of the cash on hand and the unreimbursed expenditures shall equal the amount of the fund.
1150.2	1120.32	Change Fund.
		Supplies
1220.1	1220.1	Materials and Supplies.
1220.2	1220.2	Property Held for Sale or Lease.
1220.3	1220.3	Exempt Materials—Clearing.
		Prepayments
	1280.1	Prepaid Rents.
	1280.2	Prepaid Taxes.
	1280.3	Prepaid Insurance.
	1280.4	Prepaid Directory Expenses.
	1280.5	Other Prepayments.
		Investments
1402.1	1402.1	Investments in Nonaffiliated Companies—Class B RTB Stock.
1402.11	1402.11	Investments in Nonaffiliated Companies—Class B RTB Stock—Cr.
1402.2	1402.2	Investments in Nonaffiliated Companies—Class C RTB Stock.
1402.3	1402.3	Other Investments in Nonaffiliated Companies.
		Property, Plant, and Equipment
2001.1	2001.1	Telecommunications Plant in Service—Classified.
2001.2	2001.2	Telecommunications Plant in Service—Unclassified.
2003.1	2003.1	Telecommunications Plant Under Construction—Short Term—Contract.
2003.2	2003.2	Telecommunications Plant Under Construction—Short Term—Force Account.
2003.3	2003.3	Telecommunications Plant Under Construction—Short Term—Work Orders.
2004.1	2004.1	Telecommunications Plant Under Construction—Long Term—Contract.
2004.2	2004.2	Telecommunications Plant Under Construction—Long Term—Force Account.
2004.3	2004.3	Telecommunications Plant Under Construction—Long Term—Work Orders.
		Telecommunications Plant in Service
	2210.11	Central Office Switching—Analog.
	2210.21	Central Office Switching—Digital.
	2210.31	Central Office Switching—Electro-Mechanical—Step-by-Step.
	2210.32	Central Office Switching—Electro-Mechanical—Crossbar.
	2210.33	Central Office Switching—Electro-Mechanical—Other.
	2230.11	Central Office Transmission—Radio Systems—Satellite and Earth Station Facilities.
	2230.12	Central Office Transmission—Radio Systems—Other.
	2230.21	Central Office Transmission—Circuit Equipment.

Class of company		Account title
Account No.		
A	B	
		Depreciation and Amortization
3100x	3100x	Retirement Work in Progress.
		Current Liabilities
4010.11	4010.11	Accounts Payable to Affiliated Companies.
4010.21	4010.21	Accounts Payable to Nonaffiliated Companies.
4010.22	4010.22	Accounts Payable—Employees' Income Tax Withheld.
4010.23	4010.23	Accounts Payable—FICA Taxes Withheld.
4010.24	4010.24	Accounts Payable—Federal Excise Taxes.
4010.25	4010.25	Accounts Payable—Payroll.
4070.1	4070.1	Income Taxes Accrued—Federal.
4070.2	4070.2	Income Taxes Accrued—State and Local
4080.1	4080.1	Other Taxes Accrued—Property.
4080.2	4080.2	Other Taxes Accrued—Employer's Portion—FICA.
4080.3	4080.3	Other Taxes Accrued—Federal Unemployment.
4080.4	4080.4	Other Taxes Accrued—State Unemployment.
4080.5	4080.5	Other Taxes Accrued—Miscellaneous.
4120.1	4120.1	Unmatured Interest Accrued—RUS Notes.
4120.2	4120.2	Unmatured Interest Accrued—Telephone Bank Notes.
4120.3	4120.3	Unmatured Interest Accrued—Federal Financing Bank Notes.
4120.4	4120.4	Unmatured Interest Accrued—Bank for Cooperatives Notes.
4120.5	4120.5	Unmatured Interest Accrued—Rural Telephone Finance Cooperative Notes.
4120.6	4120.6	Other Accrued Liabilities.
		Long-Term Debt
4210.11	4210.11	Funded Debt—Other.
4210.12	4210.12	RUS Notes.
4210.13	4210.13	Telephone Bank Notes.
4210.14	4210.14	Federal Financing Bank Notes.
4210.15	4210.15	Bank for Cooperatives Notes.
4210.16	4210.16	Rural Telephone Finance Cooperative Notes.
4210.17	4210.17	RUS Notes—Deferred Interest.
4210.18	4210.18	RUS Notes—Advance Payments, Dr.
4210.19	4210.19	Funded Debt—Other—Unadvanced, Dr.
4210.20	4210.20	RUS Notes—Unadvanced, Dr.
4210.21	4210.21	Telephone Bank Notes—Unadvanced, Dr.
4210.22	4210.22	Federal Financing Bank Notes—Unadvanced, Dr.
4210.23	4210.23	Bank for Cooperatives Notes—Unadvanced, Dr.
4210.24	4210.24	Rural Telephone Finance Cooperative Notes—Unadvanced, Dr.
		Stockholders' Equity and Patronage Capital
4540.11	4540.11	Capital Stock Subscribed.
4540.12	4540.12	Memberships Subscribed but Unissued.
4540.13	4540.13	Members' Equity Certificates Subscribed but Unissued.
4540.21	4540.21	Memberships Issued.
4540.22	4540.22	Members' Equity Certificates Issued.
4540.23	4540.23	Members' Equity—Other.
4540.31	4540.31	Installments Paid on Capital Stock.
4540.32	4540.32	Installments Paid on Memberships Subscribed.
4540.33	4540.33	Installments Paid on Equity Certificates Subscribed.
4540.41	4540.41	Other Capital—Miscellaneous.
4550.1	4550.1	Operating Margins.
4550.2	4550.2	Nonoperating Margins.
4550.3	4550.3	Other Margins.
4550.4	4550.4	Patronage Capital Assignable.
4550.5	4550.5	Patrons' Capital Credits Assigned.
4550.6	4550.6	Gain on the Retirement of Capital Credits.
		Plant Specific Operations Expense
	6210.11	Analog Electronic Expense.
	6210.21	Digital Electronic Expense.
	6210.31	Electro-Mechanical Expense.
	6230.11	Radio Systems Expense.
	6230.21	Circuit Equipment Expense.
		Plant Nonspecific Operations Expense
	6560.1	Depreciation Expense.
	6560.2	Amortization Expense.
		Operating Taxes.
	7200.1	Operating Investment Tax Credits—Net.
	7200.2	Operating Federal Income Taxes.
	7200.3	Operating State and Local Income Taxes.

Class of company		Account title
Account No.		
A	B	
7240.1	7200.41	Operating Taxes—Property.
7240.2	7200.42	Operating Taxes—Miscellaneous.
	7200.5	Provision for Deferred Operating Income Taxes—Net.
		Nonoperating Income and Expense
	7300.1	Dividend Income.
	7300.2	Interest Income.
	7300.3	Income From Sinking and Other Funds.
	7300.4	Allowance for Funds Used During Construction.
	7300.5	Gains or Losses from the Disposition of Certain Property.
	7300.6	Other Nonoperating Income and Expense.
		Nonoperating Taxes
	7400.1	Nonoperating Investment Tax Credits—Net.
	7400.2	Nonoperating Federal Income Taxes.
	7400.3	Nonoperating State and Local Income Taxes.
	7400.4	Nonoperating Other Taxes.
	7400.5	Provision for Deferred Nonoperating Income Taxes—Net.
		Extraordinary Items
	7600.1	Extraordinary Income Credits.
	7600.2	Extraordinary Income Charges.
	7600.3	Current Income Tax Effect of Extraordinary Items—Net.
	7600.4	Provision for Deferred Income Tax Effect of Extraordinary Items—Net.
1130.1	1120.11	*Cash—General Fund*
		This account shall include all unrestricted funds derived from revenues and other sources which are on deposit in banks or other financial institutions and available on demand. It shall also include funds in transit to the depository for which customers and agents have received credit on their accounts. Separate subaccounts should be maintained for each bank account in which general fund cash is deposited.
1130.2	1120.12	*Cash—Construction Fund Trustee*
		This account shall include all loan funds received from RUS, the Rural Telephone Bank, the Federal Financing Bank, the Bank for Cooperatives, the Rural Telephone Finance Cooperative, and all non-loan funds supplied by the borrower under the terms of the loan contract or otherwise required by RUS. The offsetting credit for funds received from RUS shall be to Account 4210.20, RUS Notes—Unadvanced, Dr.; funds received from the Rural Telephone Bank, to Account 4210.21, Telephone Bank Notes—Unadvanced, Dr.; funds received from the Federal Financing Bank, to Account 4210.22, Federal Financing Bank Notes—Unadvanced, Dr.; funds received from the Bank for Cooperatives, to Account 4210.23, Bank for Cooperatives Notes—Unadvanced, Dr.; and funds received from the Rural Telephone Finance Cooperative, to Account 4210.24, Rural Telephone Finance Cooperative Notes—Unadvanced, Dr.
1130.3	1120.13	*Cash—Transfer of Funds*
		This account shall include all transfers of funds from one bank account to another. This account shall be charged with the amount of a check drawn for the transfer, and credited when the amount transferred is entered into the Cash Receipts Book.
	1120.21	*Special Cash Deposits*
		This account shall include all cash on special deposit, other than in sinking and other special funds provided for elsewhere, to pay dividends, interest, and other debts, when such payments are due one year or less from the date of deposit; the amount of cash deposited to insure the performance of contracts to be performed within one year from the date of the deposit; and other cash deposits of a special nature not provided for elsewhere. This account shall include the amount of cash deposited with trustees to be held until mortgaged property sold, destroyed, or otherwise disposed of is replaced, and also cash realized from the sale of the company's securities and deposited with trustees to be held until invested in physical property of the company or for disbursement when the purposes for which the securities were sold are accomplished.
1150.1	1120.31	*Petty Cash Fund*
		This account shall include funds in the custody of employees or agents for making minor disbursements. The fund shall be operated on an inprest basis. Expenditures shall be supported by receipts, and reimbursements to the fund shall be for the exact amount of such expenditures and shall be charged to the various accounts to which the expenditures are allocable. At all times, the total of the cash on hand and the unreimbursed expenditures shall equal the amount of the fund.
1150.2	1120.32	*Change Fund*
		This account shall include funds in the custody of employees or agents for making change. Records shall be kept of the amount held by each person. Disbursements shall not be made from the fund.
1220.1	1220.1	*Materials and Supplies**

Class of company		Account title
Account No.		
A	B	
		This account shall include the cost of materials and supplies held in stock including plant supplies, motor vehicles supplies, tools, fuel, other supplies and material and articles of the company in process of manufacture for supply stock. Transportation charges and sales and use taxes, as far as practicable, shall be included as a part of the cost of the particular material to which they relate. Transportation and sales and use taxes which are not included as part of the cost of particular material shall be equitably apportioned among the accounts to which material is charged. As far as practicable, cash and other discounts on material shall be deducted in determining cost of the particular material to which they relate or credited to the account to which the material is charged. When such deduction is not practicable, discounts shall be equitably apportioned among the accounts to which material is charged. Material recovered in connection with construction, maintenance or retirement of property shall be charged to this account as follows: —Reusable items that, when installed or in service, were retirement units shall be included in this account at the original cost. —Reusable minor items that, when installed or in service, were not retirement units shall be included in this account at current prices new. —The cost of repairing reusable material shall be charged to the appropriate Plant Specific Operations Expense accounts. —Scrap and nonusable material included in this account shall be carried at the estimated amount which will be received therefor. The difference between the amounts realized for scrap and nonusable material sold, and the amounts at which it is carried in this account shall be adjusted in the accounts credited when the material was taken up in this account. Interest paid on material bills, the payments of which are delayed, shall be charged to Account 7540, Other Interest Deductions. Inventories of materials and supplies shall be taken during each calendar year and the adjustments to this account shall be charged or credited to Account 6512, Provisioning Expense.
1220.2	1220.2	*Property Held for Sale or Lease**
		This account shall include the cost of all items purchased for resale or lease. The cost shall include applicable transportation charges, sales and use taxes, and cash and other purchase discounts. Inventory shortages and overages shall be charged and credited, respectively to Account 7991, Other Nonregulated Revenues. *These accounts shall not include items which are related to a nonregulated activity unless that activity involves joint or common use of assets and resources in the provision of regulated and nonregulated products and services.
1220.3	1220.3	*Exempt Materials—Clearing*
		This account shall include the cost of materials and supplies designated as exempt material on the carrier's ''Exempt Material List''. Charges to this account shall be cleared monthly to the primary plant and maintenance accounts in accordance with percentages developed by the individual carriers. When there is a substantial amount of exempt material on hand at the end of the year, substantial enough to distort net income or margins, a physical inventory may be taken. The cost of the inventory on hand shall be debited to this account and credited to the appropriate primary plant and maintenance accounts on a pro-rata basis related to the original charges to these accounts. This entry shall be reversed at the first of the year.
	1280.1	*Prepaid Rents*
		This account shall include the amount of rents paid in advance of the period in which it is chargeable to income, except amounts chargeable to telecommunications plant under construction and minor amounts which may be charged directly to the final accounts. As the term expires for which the rents are paid, this account shall be credited monthly and the appropriate account charged.
	1280.2	*Prepaid Taxes*
		This account shall include the balance of all taxes paid in advance of the period in which they are chargeable to income, except amounts chargeable to telecommunications plant under construction and minor amounts which may be charged directly to the final accounts. As the term expires for which the taxes are paid, this account shall be credited monthly and the appropriate account charged.
	1280.3	*Prepaid Insurance*
		This account shall include the amount of insurance premiums paid in advance of the period in which they are chargeable to income, except premiums chargeable to telecommunications plant under construction and minor amounts which may be charged directly to the final accounts. As the term expires for which the premiums are paid, this account shall be credited monthly and the appropriate account charged.
	1280.4	*Prepaid Directory Expenses*
		This account shall include the cost of preparing, printing, binding, and delivering directories and the cost of soliciting advertisements for directories, except minor amounts which may be charged directly to Account 6620, Services. Amounts in this account, shall be cleared to Account 6620 by monthly charges representing that portion of the expenses applicable to each month.

Class of company		Account title
Account No.		
A	B	
	1280.5	*Other Prepayments*
		This amount shall include prepayments, other than those includable in Accounts 1280.1 through 1280.4 except minor amounts which may be charged directly to the final accounts. As the term expires for which the payments apply, this account shall be credited monthly and the appropriate account charged.
1402.1	1402.1	*Investments in Nonaffiliated Companies—Class B RTB Stock*
		This account shall include the par value of the required purchase of Class B Rural Telephone Bank stock and the par value of the Class B Rural Telephone Bank stock received as a patronage refund. This account shall be debited at the time the refund is received and Account 1402.11, Investments in Nonaffiliated Companies—Class B RTB Stock—Cr., credited.
		This account shall be credited and Account 1402.11 debited when the patronage refund is redeemed.
1402.11	1402.11	*Investments in Nonaffiliated Companies—Class B RTB Stock—Cr.*
		This account shall include the par value of Class B Rural Telephone Bank stock received as a patronage refund. This account shall be credited at the time the refund is received and Account 1402.1, Investments in Nonaffiliated Companies—Class B RTB Stock, debited.
		This account shall be debited and Account 1402.1 credited when the patronage refund is redeemed.
1402.2	1402.2	*Investments in Nonaffiliated Companies—Class C RTB Stock*
		This account shall include the par value of the company's investment in Class C Rural Telephone Bank stock. Cash dividends on Class C stock shall be recorded in Account 7310/7300.1, Dividend Income, when declared.
1402.3	1402.3	*Other Investments in Nonaffiliated Companies*
		This account shall include the acquisition cost of the company's investment in securities issued by nonaffiliated companies, other than securities held in special funds which shall be charged to Account 1408, Sinking Funds, and also its investment advances to such parties and special deposits of cash for more than one year from the date of deposit.
		Declines in value of investments shall be charged to Account 4540.41, Other Capital, if temporary and as a current period loss if permanent. Detailed records shall be maintained to reflect unrealized losses for each investment.
2001.1	2001.1	*Telecommunications Plant in Service—Classified*
		This account shall include the original cost of the property capitalized in Accounts 2110 through 2690.
2001.2	2001.2	*Telecommunications Plant in Service—Unclassified*
		This account shall include the original cost of telecommunications property which has been completed and placed in service but which has not been classified pending completion of final inventories of construction, final cost summaries, etc. The balance in this account is subject to depreciation charges.
2003.1	2003.1	*Telecommunications Plant Under Construction—Short Term—Contract*
		This account shall include all costs incurred in the construction of telecommunications plant performed under contract and designed to be completed in one year or less. Included among these costs are contractor payments, and charges for engineering, supervision, taxes, insurance, transportation, and other costs incurred in contract construction. This account shall be maintained such that the various items of costs are readily identifiable.
2003.2	2003.2	*Telecommunications Plant Under Construction—Short Term—Force Account*
		This account shall include all costs incurred in the construction of telecommunications plant performed by the borrowers' own employees and designed to be completed in one year or less. Included among these costs are charges for material, labor, engineering, supervision, taxes, insurance, transportation, supply expense, and other costs incurred in the construction. This account shall be maintained so that the various items of cost are readily identified. Specific subaccounts should be maintained to distinguish individual projects.
2003.3	2003.3	*Telecommunications Plant Under Construction—Short Term—Work Orders*
		This account shall include all costs incurred in the construction of telecommunications plant performed under a work order system or a line extension contract and designed to be completed in one year or less. This type of construction generally includes service installations, subscriber extensions, and minor plant improvements after the completion of the initial system. Included among these costs are charges for labor, materials and supplies, transportation, payroll taxes, insurance, supervision and other costs incurred in the construction. Subsidiary records shall be maintained to reflect the cost of individual jobs. These records shall be reconciled periodically with the general ledger control account. Specific subaccounts should be maintained to accumulate costs incurred under line extension contracts.
2004.1	2004.1	*Telecommunications Plant Under Construction—Long Term—Contract*

Class of company		Account title
Account No.		
A	B	
		This account shall include all costs incurred in the construction of telecommunications plant performed under contract and designed to be completed in more than one year. Included among these costs are contractor payments, and charges for engineering, supervision, taxes, insurance, transportation, interest during construction, and other costs incurred in contract construction. This account shall be maintained such that the various items of cost are readily identified.
2004.2	2004.2	*Telecommunications Plant Under Construction—Long Term—Force Account*
		This account shall include all costs incurred in the construction of telecommunications plant performed by the borrowers' own employees and designed to be completed in more than one year. Included among these costs are charges for material, labor, engineering, supervision, taxes, insurance, transportation, supply expense, interest during construction, and other costs incurred in the construction. This account shall be maintained such that the various items of cost are readily identified. Specific subaccounts should be maintained to distinguish individual projects.
2004.3	2004.3	*Telecommunications Plant Under Construction—Long Term—Work Orders*
		This account shall include all costs incurred in the construction of telecommunications plant performed under a work order system or a line extension contract and designed to be completed in more than one year. Included among these costs are charges for labor, materials and supplies, transportation, payroll taxes, insurance, supervision, interest during construction, and other costs incurred in the construction. Subsidiary records shall be maintained to reflect the cost of individual jobs. These records shall be reconciled periodically with the general ledger control account. Specific subaccounts should be maintained to accumulate costs incurred under line extension contracts.
	2210.11	*Central Office Switching—Analog**
		This account shall include the original cost of stored program control analog circuit-switching and associated equipment. This account shall also include the original cost of remote analog electronic circuit switches.
	2210.21	*Central Office Switching—Digital**
		This account shall include the original cost of stored program control digital switches and their associated equipment. Included in this account is the original cost of digital switches which utilize either dedicated or non-dedicated circuits. This account shall also include the original cost of remote digital electronic switches.
	2210.31	*Central Office Switching—Electro-Mechanical—Step-by-Step**
		This account shall include the original cost of step-by-step and associated circuit-switching equipment.
	2210.32	*Central Office Switching—Electro-Mechanical—Crossbar**
		This account shall include the original cost of crossbar and associated circuit switching equipment. Also included in this account is the original cost of electronic translator system equipment used in switching.
	2210.33	*Central Office Switching—Electro-Mechanical—Other**
		This account shall include the original cost of all other types of non-electronic circuit-switching equipment such as panel systems and their associated circuit-switching equipment. *Switching plant excludes switchboards which perform operator assistance functions and equipment which is an integral part thereof. It does not exclude equipment used solely for the recording of calling telephone numbers in connection with customer dialed charged traffic, dial tandem switches, and special switchboards used in conjunction with private line service; such equipment shall be classified to the particular switch that it serves.
	2230.11	*Central Office Transmission—Radio Systems—Satellite and Earth Station Facilities*
		This account shall include the original cost of an ownership interest in satellites (including land-side spares), other spare parts, materials, and supplies. It shall include launch insurance and other satellite launch costs. This account shall also include the original cost of earth stations and spare parts, materials, and supplies therefor.
	2230.12	*Central Office Transmission—Radio Systems—Other*
		This account shall include the original cost of radio equipment used to provide radio communication channels. Radio equipment is that equipment which is used for the generation, amplification, propagation, reception, modulation, and demodulation of radio waves in free space over which communications channels can be provided. This account shall also include the associated carrier and auxiliary equipment and patch bay equipment which is an integral part of the radio equipment. Such equipment may be located in central office buildings, terminal rooms, or repeater stations or may be mounted on towers, masts, or other supports.
	2230.21	*Central Office Transmission—Circuit Equipment*

Class of company		Account title
Account No.		
A	B	
		This account shall include the original cost of equipment which is used to reduce the number of physical pairs otherwise required to serve a given number of subscribers by utilizing carrier systems, concentration stages or combinations of both. It shall include equipment that provides for simultaneous use of a number of interoffice channels on a single transmission path. This account shall also include the original cost of equipment which is used for the amplification, modulation, regeneration, circuit patching, balancing or control of signals transmitted over interoffice communications transmission channels. This account shall include the original cost of equipment which utilizes the message path to carry signaling information or which utilizes separate channels between switching offices to transmit signaling information independent of the subscribers' communication paths or transmission channels. This account shall also include the original cost of associated material used in the construction of such plant. Circuit equipment may be located in central offices, in manholes, on poles, in cabinets or huts or at other locations. This account excludes carrier and auxiliary equipment and patch bay which are recorded in Account 2230.12, Central Office Transmission—Radio Systems—Other
3100x	3100x	*Retirement Work in Progress* This account shall be charged with the original cost of property retired from the telecommunications plant accounts. It shall also be charged with all of the costs incurred in removing the retired plant from service. This account shall be credited with the salvage value of materials recovered in the retirement of the telecommunications plant. At such time as the retirement work order is complete, the net income/loss resulting therefrom shall be transferred from this account to the appropriate primary plant depreciation reserve account.
4010.11	4010.11	*Accounts Payable to Affiliated Companies* This account shall include all amounts currently due to affiliated companies for recurring trade obligations, and not provided for in other accounts, such as those for traffic settlements, material and supplies, repairs to telecommunications plant, matured rents, and interest payable under monthly settlements on short-term loans, advances, and open accounts.
4010.21	4010.21	*Accounts Payable to Nonaffiliated Companies* This account shall include all amounts currently due to nonaffiliated companies for recurring trade obligations, and not provided for in other accounts, such as those for traffic settlements, materials and supplies, repairs to telecommunications plant, matured rents, and interest payable under monthly settlements on short-term loans, advances, and open accounts.
4010.22	4010.22	*Accounts Payable—Employees' Income Tax Withheld* This account shall include income taxes payable that have been withheld from employees' salaries.
4010.23	4010.23	*Accounts Payable—FICA Taxes Withheld* This account shall include FICA taxes payable that have been withheld from employees' salaries.
4010.24	4010.24	*Accounts Payable—Federal Excise Taxes* This account shall include Federal excise taxes payable.
4010.25	4010.25	*Accounts Payable—Payroll* This account shall include amounts payable to the company's employees in the form of salaries or wages.
4070.1	4070.1	*Income Taxes Accrued—Federal* For Class A companies, this account shall be credited and Accounts 7220, 7420, and 7630, as appropriate, shall be debited for the amount of Federal income taxes accrued during the current operating period. For Class B companies, this account shall be credited and Accounts 7220.2, 7400.2, and 7600.3, as appropriate, shall be debited for the amount of Federal income taxes accrued during the current operating period.
4070.2	4070.2	*Income Taxes Accrued—State and Local* For Class A companies, this account shall be credited and Accounts, 7230, 7430, and 7630, as appropriate, shall be debited for the amount of state and local income taxes accrued during the current operating period. For Class B companies, this account shall be credited and Accounts, 7200.3, 7400.3, and 7600.3, as appropriate, shall be debited for the amount of state and local income taxes accrued during the current operating period.
4080.1	4080.1	*Other Taxes Accrued—Property* This account shall be credited and Account 7240.1/7200.41, Operating Taxes—Property, shall be debited for the amount of property taxes accrued during the current operating period.
4080.2	4080.2	*Other Taxes Accrued—Employer's Portion—FICA* This account shall be credited and the appropriate construction, depreciation, or expense account shall be debited for the employer's portion of FICA taxes accrued during the current operating period.
4080.3	4080.3	*Other Taxes Accrued—Federal Unemployment*

Class of company		Account title
Account No.		
A	B	
		This account shall be credited and the appropriate construction, removal, or expense account shall be debited for the amount of Federal unemployment taxes accrued during the current operating period.
4080.4	4080.4	*Other Taxes Accrued—State Unemployment*
		This account shall be credited and the appropriate construction, removal, or expense account shall be debited for the amount of state unemployment taxes accrued during the current operating period.
4080.5	4080.5	*Other Taxes Accrued—Miscellaneous*
		This account shall be credited and Account 7240.2/7200.42, Operating Taxes—Miscellaneous, shall be debited for the amount of all other taxes accrued during the current operating period and not provided for elsewhere such as a gross receipts tax, franchise taxes, and capital stock taxes.
4120.1	4120.1	*Unmatured Interest Accrued—RUS Notes*
		This account shall include the interest accrued as of the balance sheet date but not payable until after that date on RUS mortgage notes. Interest expense incurred during the period of construction of telecommunications plant shall be charged to Account 2004, Telecommunications Plant Under Construction—Long Term, and credited to Account 7340/7300.4, Allowance for Funds Used During Construction.
4120.2	4120.2	*Unmatured Interest Accrued—Telephone Bank Notes*
		This account shall include the interest accrued as of the balance sheet date but not payable until after that date on Rural Telephone Bank mortgage notes. Interest expense incurred during the period of construction of telecommunications plant shall be charged to Account 2004, Telecommunications Plant Under Construction—Long Term, and credited to Account 7340/7300.4, Allowance for Funds Used During Construction.
4120.3	4120.3	*Unmatured Interest Accrued—Federal Financing Bank Notes*
		This account shall include the interest accrued as of the balance sheet date but not payable until after that date on Federal Financing Bank mortgage notes. Interest expense incurred during the period of construction of telecommunications plant shall be charged to Account 2004, Telecommunications Plant Under Construction—Long Term, and credited to Account 7340/7300.4, Allowance for Funds Used During Construction.
4120.4	4120.4	*Unmatured Interest Accrued—Bank for Cooperatives Notes*
		This account shall include the interest accrued as of the balance sheet date but not payable until after that date on Bank for Cooperatives mortgage notes. Interest expense incurred during the period of construction of telecommunications plant shall be charged to Account 2004, Telecommunications Plant Under Construction—Long Term, and credited to Account 7340/7300.4, Allowance for Funds Used During Construction.
4120.5	4120.5	*Unmatured Interest Accrued—Rural Telephone Finance Cooperative Notes*
		This account shall include the interest accrued as of the balance sheet date but not payable until after that date on Rural Telephone Finance Cooperative mortgage notes. Interest expense incurred during the period of construction of telecommunications plant shall be charged to Account 2004, Telecommunications Plant Under Construction—Long Term, and credited to Account 7340/7300.4, Allowance for Funds Used During Construction.
4120.6	4120.6	*Other Accrued Liabilities*
		This account shall include the amount of wages, compensated absences, interest on indebtedness of the company, dividends on capital stock, and rents accrued as of the balance sheet date but not payable until after the date. This account shall not include interest accrued on RUS, Rural Telephone Bank, Bank for Cooperatives, Federal Financing Bank, or Rural Telephone Finance Cooperative debt.
4210.11	4210.11	*Funded Debt—Other*
		This account shall include the total face amount of unmatured debt, maturing more than one year from the date of issue, issued by the company and not retired, and the total face amount of similar unmatured debt of other companies, the payment of which has been assumed by the company, including funded debt the maturity of which has been extended by specific agreement. This account shall not include unmatured RUS, Rural Telephone Bank, Federal Financing Bank, Bank for Cooperatives, or Rural Telephone Finance Cooperative debt.
4210.12	4210.12	*RUS Notes*
		This account shall include the total face amount of unmatured RUS mortgage notes. Account 4210.20, RUS Notes—Unadvanced, Dr., shall be charged and this account credited upon execution of the notes. If principal installments are not paid at the maturity date, the amount due shall be transferred to Account 4050, Current Maturities—Long-Term Debt.
4210.13	4210.13	*Telephone Bank Notes*
		This account shall include the total face amount of unmatured Rural Telephone Bank mortgage notes. Account 4210.21, Telephone Bank Notes—Unadvanced, Dr., shall be changed and this account credited upon execution of the notes.

Class of company		Account title
Account No.		
A	B	
		If principal installments are not paid at the maturity date, the amount due shall be transferred to Account 4050, Current Maturities—Long-Term Debt.
4210.14	4210.14	*Federal Financing Bank Notes*
		This account shall include the total face amount of unmatured Federal Financing Bank mortgage notes. Account 4210.22, Federal Financing Bank Notes—Unadvanced, Dr., shall be charged and this account credited upon execution of the notes. If principal installments are not paid at the maturity date, the amount due shall be transferred to Account 4050, Current Maturities—Long-Term Debt.
4210.15	4210.15	*Bank for Cooperatives Notes*
		This account shall include the total face amount of unmatured Bank for Cooperatives mortgage notes. Account 4210.23, Bank for Cooperatives Notes—Unadvanced, Dr., shall be charged and this account credited upon execution of the notes. If principal installments are not paid at the maturity date, the amount due shall be transferred to Account 4050, Current Maturities—Long-Term Debt.
4210.16	4210.16	*Rural Telephone Finance Cooperative Notes*
		This account shall include the total face amount of unmatured Rural Telephone Finance Cooperative mortgage notes. Account 4210.24, Rural Telephone Finance Cooperative Notes—Unadvanced, Dr., shall be charged and this account credited upon execution of the notes. If principal installments are not paid at the maturity date, the amount due shall be transferred to Account 4050, Current Maturities—Long-Term Debt.
4210.17	4210.17	*RUS Notes—Deferred Interest*
		This account shall include interest accrued on RUS mortgage notes, the payment of which has been deferred in accordance with the terms of the notes or extension agreements. The offsetting charge shall be to Account 7510, Interest on Funded Debt, for Class A companies and Account 7500, Interest and Related Items, for Class B companies. If interest payments are not made at the due date, this account shall be debited and Account 4010.21, Accounts Payable to Nonaffiliated Companies, credited with the amount of the matured interest.
4210.18	4210.18	*RUS Notes—Advance Payments, Dr.*
		This account shall include all payments on RUS mortgage notes made in advance of the due date and not applied to a specific quarterly payment. As these payments are applied to specific notes, this account shall be credited and the long-term debt and interest liability accounts debited.
4210.19	4210.19	*Funded Debt—Other—Unadvanced, Dr.*
		This account shall include the total face amount of notes executed to others, for which funds have not been received. This account shall be credited and Account 1130.1/1120.11, Cash—General Funds, debited when funds are received from the lender.
4210.20	4210.20	*RUS Notes—Unadvanced, Dr.*
		This account shall include the total face amount of RUS mortgage notes for which funds have not been received. This account shall be credited and Account 1130.2/1120.12, Cash—Construction Fund Trustee, debited when funds are received from RUS.
4210.21	4210.21	*Telephone Bank Notes—Unadvanced, Dr.*
		This account shall include the total face amount of Rural Telephone Bank mortgage notes for which funds have not been received. This account shall be credited and Account 1130.2/1120.12, Cash—Construction Fund Trustee, debited when funds are received from the Rural Telephone Bank.
4210.22	4210.22	*Federal Financing Bank Notes—Unadvanced, Dr.*
		This account shall include the total face amount of Federal Financing Bank mortgage notes for which funds have not been received. This account shall be credited and Account 1130.2/1120.12, Cash—Construction Fund Trustee, debited when funds are received from the Federal Financing Bank.
4210.23	4210.23	*Bank for Cooperatives Notes—Unadvanced, Dr.*
		This account shall include the total face amount of Bank for Cooperatives mortgage notes for which funds have not been received. This account shall be credited and Account 1130.2/1120.12, Cash—Construction Fund Trustee, debited when funds are received from the Bank for Cooperatives.
4210.24	4210.24	*Rural Telephone Finance Cooperative Notes—Unadvanced, Dr.*
		This account shall include the total face amount of Rural Telephone Finance Cooperative mortgage notes for which funds have not been received. This account shall be credited and Account 1130.2/1120.12, Cash—Construction Fund Trustee, debited when funds are received from the Rural Telephone Finance Cooperative.
4540.11	4540.11	*Capital Stock Subscribed.*

Class of company		Account title
Account No.		
A	B	
		This account shall include the par value of capital stock for which legally enforceable subscriptions have been received but for which, at the date of the balance sheet, stock certificates have not been issued. This account shall be debited and Account 4510, Capital Stock, credited when a subscriber has paid the subscription in full and stock certificates are issued.
4540.12	4540.12	*Memberships Subscribed but Unissued.*
		This account shall include the face amount of memberships subscribed but not issued. This account shall be credited at the time the subscription is received and Account 1350.2, Subscriptions to Memberships, debited. This account shall be debited and Account 4540.21, Memberships Issued, credited when a subscriber has paid the subscription in full and the membership certificates are issued.
4540.13	4540.13	*Members' Equity Certificates Subscribed but Unissued.*
		This account shall include the face amount of members' equity certificates subscribed but not issued. This account shall be credited at the time the subscription is received and Account 1350.3, Subscriptions to Members' Equity Certificates, debited. This account shall be debited and Account 4540.22, Members' Equity Certificates Issued, credited when a subscriber has paid the subscription in full and the members' equity certificates are issued.
4540.21	4540.21	*Memberships Issued.*
		This account shall include the face amount of membership certificates outstanding. A subsidiary membership certificate record shall be maintained to reflect the detail of the balance in this account.
4540.22	4540.22	*Member's Equity Certificates Issued.*
		This account shall include the face amount of members' equity certificates outstanding. A subsidiary members' equity certificate record shall be maintained to reflect the detail of the balance in this account.
4540.23	4540.23	*Members' Equity—Other.*
		This account shall include credit amounts arising from donations, forfeitures of membership fees, forgiveness of debts of the cooperative, and member's equities not otherwise provided for.
4540.31	4540.31	*Installments Paid on Capital Stock.*
		This account shall include the amount of installments paid on capital stock on a partial or installment payment plan by subscribers against whom there is no legally enforceable subscription contract, and who are entitled to be reimbursed the principal amount of their payments, with or without interest, in the event they fail to complete payment for the stock and receive certificates therefore. This account shall be debited and Account 4510, Capital Stock, credited with the par value of capital stock when the total subscription is received and the stock certificates are issued. Any difference between the purchase price of the subscription and the par value of the stock shall be credited to Account 4520, Additional Paid-In Capital. A subsidiary ledger shall be maintained to record for each subscriber, the amount subscribed, payments made, and the balance due. The balance in this account shall be reconciled monthly with the subscription ledger.
4540.32	4540.32	*Installments Paid on Memberships Subscribed.*
		This account shall include the amount of installments paid by prospective members on membership subscriptions against whom there is no legally enforceable subscription contract, and who are entitled to be reimbursed for the principal amount of their payments, with or without interest, in the event they fail to complete payment for the membership and receive certificates therefor. This account shall be debited and Account 4540.21, Memberships Issued, credited with the face amount of the membership when the total subscription is received and the membership certificates are issued. A subsidiary ledger shall be maintained to record for each subscriber, the amount subscribed, payments made, and the balance due. The balance in this account shall be reconciled monthly with the subscription ledger.
4540.33	4540.33	*Installments Paid on Equity Certificates Subscribed*
		This account shall include the amount of installments paid by prospective members on equity certificate subscriptions against whom there is no legally enforceable subscription contract, and who are entitled to be reimbursed for the principal amount of their payments, with or without interest, in the event they fail to complete payment for the membership and receive equity certificates therefor. This account shall be debited and Account 4540.22, Members' Equity Certificates Issued, credited with the face amount of the memberships when the total subscription is received and the equity certificates are issued. A subsidiary ledger shall be maintained to record for each subscriber, the amount subscribed, payments made, and the balance due. The balance in this account shall be reconciled monthly with the subscription ledger.
4540.41	4540.41	*Other Capital—Miscellaneous*
		This account shall include amounts which are credits arising from capital recorded upon the reorganization or recapitalization of the company and temporary declines in the value of marketable securities held for investment purposes.

Class of company		Account title
Account No.		
A	B	
4550.1	4550.1	*Operating Margins* This account shall include amounts received or receivable from the furnishing of telecommunications service in excess of costs incurred in the furnishing of such service. If costs exceed revenues, the excess cost of furnishing telecommunications service shall be recorded as a debit to this account.
4550.2	4550.2	*Nonoperating Margins* This account shall include margins arising from transactions or activities not related to the furnishing of telecommunications service. Included in this account are receipts from investments, income from investments, income from nonoperating plant, and revenues derived from services performed for others incident to the company's regulated telecommunications operations.
4550.3	4550.3	*Other Margins* This account shall include patronage capital credits assigned to the cooperative by other nonprofit organizations prior to January 1, 1970, which were not credited directly to an operating expense account as a reduction in the cost of furnishing telecommunications service. No entries shall be made to this account unless it is to distribute or eliminate prior balances in conformance with the bylaws of the cooperative.
4550.4	4550.4	*Patronage Capital Assignable* This account shall include all amounts transferred from operating margins, nonoperating margins, and other margin accounts which are assignable to individual patrons.
4550.5	4550.5	*Patrons' Capital Credits Assigned* This account shall include the amounts of patronage capital which have been credited to individual patrons. A subsidiary patronage capital ledger shall be maintained so as to reflect the amount of capital furnished by each patron and the amount of such capital returned to the patron.
4550.6	4550.6	*Gain on the Retirement of Capital Credits* This account shall include credits resulting from the retirement of patronage capital through settlement of individual patrons' accounts at less than 100 percent of the capital assigned to the patron. The portion of patronage capital not returned to patrons under such settlements shall be debited to Account 4550.5, Patrons' Capital Credits Assigned, and credited to this account. This account shall also include amounts representing patronage capital authorized to be retired to patrons who cannot be located. Returned checks issued for retirements of patronage capital, after an appropriate waiting period, shall be credited to this account and a record shall be maintained adequate to enable the cooperative to make payment to the patron if and when a claim has been established by the patron.
	6210.11	*Analog Electronic Expense* This account shall include expenses associated with analog electronic switching.
	6210.21	*Digital Electronic Expense* This account shall include expenses associated with digital electronic switching.
	6210.31	*Electro-Mechanical Expense* This account shall include expenses associated with electro-mechanical switching.
	6230.11	*Radio Systems Expense* This account shall include expenses associated with radio systems.
	6230.21	*Circuit Equipment Expense* This account shall include expenses associated with circuit equipment.
	6560.1	*Depreciation Expense* This account shall include the depreciation expense associated with telecommunications plant in service (Accounts 2112 through 2441) and property held for future telecommunications use (Account 2002).
	6560.2	*Amortization Expense* This account shall include the amortization expense associated with capital leases and leasehold improvements (Accounts 2681 and 2682), intangibles (Account 2690), and telecommunications plant adjustments (Account 2005).
	7200.1	*Operating Investment Tax Credits—Net* This account shall be charged and Account 4320, Unamortized Operating Investment Tax Credits—Net, shall be credited with investment tax credits generated from qualified expenditures related to regulated operations which the company defers rather than recognizes currently in income. This account shall be credited and Account 4320 shall be charged ratably with the amortization of each year's investment tax credits included in Account 4320 for investment services for ratemaking purposes. Such amortization shall be determined in relation to the period of time used for computing book depreciation on the property with respect to which the tax credits relate.
	7200.2	*Operating Federal Income Taxes*

Class of company		Account title
Account No.		
A	B	
		This account shall be charged and Account 4070.1, Income Taxes Accrued—Federal, shall be credited for the amount of Federal income tax expense incurred in the current operating period. This account shall also reflect subsequent adjustments to amounts previously charged. Taxes should be accrued each month on an estimated basis and adjustments made as later data becomes available.
	7200.3	*Operating State and Local Income Taxes*
		This account shall be charged and Account 4070.2, Income Taxes Accrued—State and Local, shall be credited for the amount of state and local income tax expense incurred in the current operating period. This account shall also reflect subsequent adjustments to amounts previously charged. Taxes should be accrued each month on an estimated basis and adjustments made as later data becomes available.
7240.1	7200.41	*Operating Taxes—Property*
		This account shall be charged and Account 4080.1, Other Taxes Accrued—Property, shall be credited for the amount of property tax expense incurred in the current operating period. This account shall also reflect subsequent adjustments to amounts previously charged. Taxes should be accrued each month on an estimated basis and adjustments made as later data becomes available.
7240.2	7200.42	*Operating Taxes—Miscellaneous*
		This account shall be charged and Account 4080.5, Other Taxes Accrued—Miscellaneous, shall be credited for the amount of all other taxes accrued during the current operating period and not provided for elsewhere such as gross receipts, franchise, and capital stock tax expense incurred in the current operating period. This account shall also reflect subsequent adjustments to amounts previously charged. Taxes should be accrued each month on an estimated basis and adjustments made as later data becomes available.
	7200.5	*Provision for Deferred Operating Income Taxes–Net*
		This account shall be charged or credited, as appropriate, with contra entries recorded in either Account 4100, Net Current Deferred Operating Income Taxes, or Account 4340, Net Noncurrent Deferred Operating Income Taxes, as appropriate, for income tax expense that has been deferred. Subsidiary record categories shall be maintained to distinguish between property and nonproperty related deferrals and so that the company may separately report the amounts contained herein that relate to Federal, state, and local income taxes.
	7300.1	*Dividend Income*
		This account shall include dividends on investments in common and preferred stock, which is the property of the company, whether such stock is owned by the company and held in its treasury, or deposited in trust, or otherwise controlled. This account shall not include dividends or other returns on securities issued or assumed by the company and held by or for it, whether pledged as collateral, or held in its treasury, in special deposits, or in sinking or other funds. Dividends on stocks of other companies held in sinking or other funds shall be credited to Account 7300.3, Income from Sinking and Other Funds. Dividends received and receivable from affiliated companies accounted for on the equity method shall be included in Account 1401, Investments in Affiliated Companies, as a reduction of the carrying value of the investments.
	7300.2	*Interest Income*
		This account shall include interest on securities, including notes and other evidences of indebtedness which are the property of the company, whether such securities are owned by the company and held in its treasury, or deposited in trust (except in sinking or other funds) or otherwise controlled. It shall also include interest on bank balances, certificates of deposits, open accounts, and other analogous items. There shall be included in this account for each month, the applicable amount requisite to extinguish, during the interval between the date of acquisition and the date of maturity, the difference between the purchase price and the par value of securities owned, the income from which is includable in this account. Amounts thus credited or charged shall be concurrently included in the accounts in which the securities are carried. Any such difference remaining unextinguished at the sale or upon the maturity and satisfaction of such securities shall be cleared to Account 7300.6. Other Nonoperating Income and Expense.
	7300.3	*Income from Sinking and Other Funds*
		This account shall include the income accrued on cash, securities issued by other companies, and other assets (not including securities issued or assumed by the company) held in sinking and other funds.

Class of company		Account title
Account No.		
A	B	
		There shall be included in this account for each month the applicable amount requisite to extinguish, during the interval between the date of acquisition and the date of maturity, the difference between the purchase price and the par value of securities held in sinking or other funds. Amounts thus credited or charged shall be concurrently included in the accounts in which the securities are carried. Any such differences remaining unextinguished upon the maturity and satisfaction of such securities shall be cleared to Account 7300.6. Other Nonoperating Income and Expense.
	7300.4	*Allowance for Funds Used During Construction*
		This account shall be credited with such amounts as are charged to the telecommunications plant accounts for the purpose or recording an allowance for funds used for construction purposes.
	7300.5	*Gains or Losses from the Disposition of Certain Property*
		This account shall include gains or losses resulting from the disposition of land or artworks; plant with traffic, and nonoperating telecommunications plant not previously used in the provision of telecommunication services.
	7300.6	*Other Nonoperating Income and Expense*
		This account shall include all other items of income and gains or losses from activities not specifically provided for elsewhere such as gains or losses realized on the sale of temporary cash investments or marketable equity securities; fees collected in connection with the exchange of coupon bonds for registered bonds; uncollectible amounts previously credited to Accounts 7300.1, 7300.2, 7300.3, 7300.4, 7300.5, and 7300.6, gains or losses from the extinguishment of debt made to satisfy sinking fund requirements; gains or losses of a nonoperating nature arising from the exchange or translation of foreign currency; net unrealized losses on investments in current marketable equity securities; write-downs or write-offs of the book costs of investments in equity securities due to permanent impairment; amortization of goodwill; the company's share of earnings or losses of affiliated companies accounted for on the equity method; and the net balance of the revenue from and the expenses of property, plant, and equipment, the cost of which is includable in Account 2006, Nonoperating Plant.
	7400.1	*Nonoperating Investment Tax Credits—Net*
		This account shall be charged and Account 4330, Unamortized Nonoperating Investment Tax Credits—Net, shall be credited with nonoperating investment tax credits generated from qualified expenditures related to other operations which the company has elected to defer rather than recognize currently in income.
		This account shall be credited and Account 4330, Unamortized Nonoperating Investment Tax Credits—Net, shall be charged with the amortization of each year's investment tax credits included in such accounts relating to amortization of previously deferred investment tax credits of other property or regulated property, the amortization of which does not serve to reduce costs of service (but the unamortized balance does reduce rate base) for ratemaking purposes. Such amortization shall be determined with reference to the period of time used for computing book depreciation on the property with respect to which the tax credits relate.
	7400.2	*Nonoperating Federal Income Taxes*
		This account shall be charged and Account 4070.1, Income Taxes Accrued—Federal, shall be credited for the amount of nonoperating Federal income taxes for the current period. This account shall also reflect subsequent adjustments to amounts previously charged.
		Taxes shall be accrued each month on an estimated basis and adjustments made as later data becomes available. Companies that adopt the flowthrough method of accounting for investment tax credits shall reduce the calculated provision in this account by the entire amount of the credit realized during the year. Tax credits, if normalized, shall be recorded consistent with the accounting for investment tax credits.
		No entries shall be made to this account to reflect interperiod tax allocation.
	7400.3	*Nonoperating State and Local Income Taxes*
		This account shall be charged and Account 4070.2, Income Taxes Accrued—State and Local, shall be credited for the amount of nonoperating state and local income taxes for the current period. This account shall also reflect subsequent adjustments to amounts previously charged.
		Taxes shall be accrued each month on an estimated basis and adjustments made as later data becomes available.
		No entries shall be made to this account to reflect interperiod tax allocation.
	7400.4	*Nonoperating Other Taxes*
		This account shall be charged and Account 4080.5, Other Taxes Accrued—Miscellaneous, shall be credited for all nonoperating taxes, other than Federal, state, and local income taxes, and payroll related taxes for the current period. Among the items includable in this account are property, gross receipts, franchise and capital stock taxes. This account shall also reflect subsequent adjustments to amounts previously charged.
	7400.5	*Provision for Deferred Nonoperating Income Taxes—Net*
		This account shall be charged or credited, as appropriate, with contra entries recorded in either Account 4110, Net Current Deferred Nonoperating Income Taxes, or Account 4350, Net Noncurrent Deferred Nonoperating Income Taxes, as appropriate, for nonoperating tax expenses that have been deferred.

Class of company		Account title
Account No.		
A	B	
		Subsidiary record categories shall be maintained to distinguish between property and nonproperty related deferrals and so that the company may separately report the amounts contained herein that relate to Federal, state, and local income taxes.
	7600.1	*Extraordinary Income Credits*
		This account shall be credited with nontypical, noncustomary, and infrequently recurring gains which would significantly distort the current year's income computed before such extraordinary items, if reported other than as extraordinary items. Income tax relating to the amounts recorded in this account shall be recorded in Account 7600.3, Current Income Tax Effect for Extraordinary Items—Net, and Account 7600.4, Provision for Deferred Income Tax Effect of Extraordinary Items—Net.
	7600.2	*Extraordinary Income Charges*
		This account shall be debited with nontypical, noncustomary, and infrequently recurring losses which would significantly distort the current year's income computed before such extraordinary items, if reported other than as extraordinary items. Income tax relating to the amounts recorded in this account shall be recorded in Account 7600.3, Current Income Tax Effect for Extraordinary Items—Net, and Account 7600.4, Provision for Deferred Income Tax Effect of Extraordinary Items—Net.
	7600.3	*Current Income Tax Effect of Extraordinary Items—Net*
		This account shall be charged or credited and Account 4070.1, Income Taxes Accrued—Federal, or Account 4070.2, Income Taxes Accrued—State and Local, shall be credited or charged, as appropriate, for all current income tax effects (Federal, state, and local) of items included in Account 7600.1, Extraordinary Income Credits, and Account 7600.2, Extraordinary Income Charges.
	7600.4	*Provision for Deferred Income Tax Effect of Extraordinary Items—Net*
		This account shall be charged or credited, as appropriate, with a contra amount recorded in Account 4350, Net Noncurrent Deferred Nonoperating Income Taxes, or Account 4110, Net Current Deferred Nonoperating Income Taxes, for the income tax effects (Federal, state, and local) of items included in Account 7600.1, Extraordinary Income Credits, and Account 7600.2, Extraordinary Income Charges, that have been deferred.

[55 FR 3388, Feb. 1, 1990; 55 FR 17352, Apr. 24, 1990, as amended at 55 FR 53488, Dec. 31, 1990]

§ 1770.16 Supplementary accounts required of nonprofit organizations.

Class of company		Account title
Account No.		
A	B	
		Current Assets
1350.1	1350.1	Subscriptions to Capital Stock.
1350.2	1350.2	Subscriptions to Memberships.
1350.3	1350.3	Subscriptions to Members' Equity Certificates.
1350.4	1350.4	Other Current Assets.
		Current Liabilities
4130.1	4130.1	Patronage Capital Payable.
4130.2	4130.2	Other Current Liabilities—Miscellaneous.
		Long-Term Debt
4270.1	4270.1	Members' Redeemable Equity Certificates Subscribed but Unissued.
4270.2	4270.2	Members' Redeemable Equity Certificates Issued.
4270.3	4270.3	Other Long-Term Debt.
1350.1	1350.1	*Subscriptions to Capital Stock*
		This account shall include the balance due from subscribers upon legally enforceable subscriptions to capital stock.
		The purchase price of subscriptions shall be charged to this account at the time the subscription is received. The par value of the stock subscribed shall be credited to Account 4540.11, Capital Stock Subscribed, and the difference between the purchase price and the par value shall be credited to Account 4520, Additional Paid-In Capital.
1350.2	1350.2	*Subscriptions to Memberships*
		This account shall include the balance due on memberships subscribed. The face amount of memberships subscribed shall be charged to this account at the time the subscription is received. The offsetting credit shall be to Account 4540.12, Memberships Subscribed but Unissued.
		A subscription ledger shall be maintained to record for each subscriber, the amount subscribed, payments made, and the balance due. The balance in this account shall be reconciled monthly with the subscription ledger.
1350.3	1350.3	*Subscriptions to Members' Equity Certificates*

Class of company		Account title
Account No.		
A	B	
		This account shall include the balance due on member's equity certificates subscribed. The face amount of certificates subscribed shall be charged to this account at the time the subscription is received. The offsetting credit shall be to Account 4540.13, Members' Equity Certificates Subscribed but Unissued, or to Account 4270.1, Members' Redeemable Equity Certificates Subscribed but Unissued. A subscription ledger shall be maintained to record for each subscriber, the amount subscribed, payments made, and the balance due. The balance in this account shall be reconciled monthly with the subscription ledger. The subscription ledger shall be maintained in such a manner as to separately identify redeemable and nonredeemable certificates.
1350.4	1350.4	*Other Current Assets* This account shall include the amount of all current assets which are not includable in Accounts 1120 through 1350.3.
4130.1	4130.1	*Patronage Capital Payable* This account shall include the amount of patronage capital which has been authorized to be returned to patrons.
4130.2	4130.2	*Other Current Liabilities—Miscellaneous* This account shall include liabilities of current character which are not includable in Accounts 4010 through 4130.1.
4270.1	70.1	*Members' Redeemable Equity Certificates Subscribed but Unissued* This account shall include the face amount of members' equity certificates which are redeemable at some specified future date for which subscriptions have been received but for which certificates have not been issued. This account shall be credited at the time the subscription is received and Account 1350.3, Subscriptions to Members' Equity Certificates, debited. This account shall be debited and Account 4270.2, Members' Redeemable Equity Certificates Issued, credited when a subscriber has paid the subscription in full and the equity certificates are issued.
4270.2	4270.2	*Members' Redeemable Equity Certificates Issued* This account shall include the face amount of outstanding members' equity certificates which are redeemable at some specified future date. A subsidiary members' redeemable equity certificate record shall be maintained to reflect the detail of the balance in this account.
4270.3	4270.3	*Other Long-Term Debt* This account shall include long-term debt not provided for elsewhere.

§§ 1770.17—1770.25 [Reserved]

Subpart C—Accounting Interpretations

SOURCE: 61 FR 39847, July 31, 1996, unless otherwise noted.

§ 1770.26 General.

(a) The standard provisions of the security instruments utilized by the Rural Utilities Service (RUS) and the Rural Telephone Bank (RTB) for all telecommunications borrowers require borrowers to at all times keep and safely preserve, proper books, records, and accounts in which full and true entries will be made of all of the dealings, business, and affairs of the borrower in accordance with the methods and principles of accounting prescribed by the state regulatory body having jurisdiction over the borrower and by the Federal Communications Commission (FCC) in its Uniform System of Accounts for telecommunications companies (47 CFR part 32), as those methods and principles of accounting are supplemented from time to time by RUS.

(b) This subpart implements those standard provisions of the RUS and RTB security instruments by prescribing accounting principles, methodologies, and procedures applicable to all telecommunications borrowers for particular situations.

§ 1770.27 Definitions.

As used in this part:

Borrower is an RUS telecommunications borrower.

Cushion of Credit Account is a 5 percent interest bearing account established by RUS in which all voluntary payments or overpayments on Rural Electric and Telephone Revolving Funds after October 1, 1987, are deposited.

FCC is the Federal Communications Commission.

Part 32 is 47 CFR part 32, Uniform System of Accounts, issued by the Federal Communications Commission.

RAO is the Responsible Accounting Officer of the Federal Communications Commission.

RE Act is the Rural Electrification Act of 1936, as amended (7 U.S.C. 901 *et seq.*).

RETRF is the Rural Electric and Telephone Revolving Fund.

RTB is the Rural Telephone Bank.

RUS is the Rural Utilities Service, an agency of the United States Department of Agriculture, or its predecessor or successor.

§ 1770.28—1770.45 [Reserved]

APPENDIX TO SUBPART C TO PART 1770—ACCOUNTING METHODS AND PROCEDURES REQUIRED OF ALL BORROWERS

All borrowers shall maintain and keep their books of accounts and all other books and records which support the entries in such books of accounts in accordance with the accounting principles prescribed in this appendix.

Numerical Index

Number and Title

101 Postretirement Benefits
102 Rural Telephone Bank Stock
103 Cushion of Credit Investments
104 Rural Economic Development Loan and Grant Program
105 Satellite and Cable Television Services
106 Consolidated Financial Statements

Subject Matter Index *Number*

C
Cable Television Services 105
Consolidated Financial Statements 106
Cushion of Credit Investments 103
E
Economic Development Loan and Grant Program 104
F
Financial Statements—Consolidated 106
I
Investments—Cushion of Credit .. 103
P
Postretirement Benefits 101
R
Rural Economic Development Loan and Grant Program 104
Rural Telephone Bank Stock 102
S
Satellite Television Services 105
Stock—Rural Telephone Bank 102

Postretirement Benefits.

A. Statement of Financial Accounting Standards No. 106, Employers' Accounting for Postretirement Benefits Other than Pensions (Statement No. 106), requires reporting entities to accrue the expected cost of postretirement benefits during the years the employee provides service to the entity. For purposes of applying the provisions of Statement No. 106, members of the board of directors are considered to be employees of the cooperative. Prior to the issuance of Statement No. 106, most reporting entities accounted for postretirement benefit costs on a ''pay-as-you-go'' basis; that is, costs were recognized when paid, not when the employee provided service to the entity in exchange for the benefits. (Statement 106 is available from the Financial Accounting Standards Board, 401 Merritt 7, P.O. Box 5116, Norwalk, CT. 06856–5116.)

B. As defined in Statement No. 106, a postretirement benefit plan is a deferred compensation arrangement in which an employer promises to exchange future benefits for an employee's current services. Postretirement benefit plans may be funded or unfunded. Postretirement benefits include, but are not limited to, health care, life insurance, tuition assistance, day care, legal services, and housing subsidies provided outside of a pension plan.

C. Statement No. 106 applies to both written plans and to plans whose existence is implied from a practice of paying postretirement benefits. An employer's practice of providing postretirement benefits to selected employees under individual contracts with specific terms determined on a employee-by-employee basis does not, however, constitute a postretirement benefit plan under the provisions of this statement.

D. Postretirement benefit plans generally fall into three categories: single-employer defined benefit plans, multiemployer plans, and multiple-employer plans.

E. A single-employer plan is a postretirement benefit plan that is maintained by one employer. The term may also be applied to a plan that is maintained by related parties such as a parent and its subsidiaries. A multiemployer plan is a postretirement benefit plan in which two or more unrelated employers contribute, usually pursuant to one or more collective-bargaining agreements. One characteristic of a multiemployer plan is

that the assets contributed by one participating employer may be used to provide benefits to employees of other participating employers since assets contributed by an employer are not segregated in a separate account or restricted to provide benefits only to employees of that employer.

F. A multiple-employer plan is a postretirement benefit plan that is maintained by more than one employer but is not a multiemployer plan. A multiple-employer plan is generally not collectively bargained and is intended to allow participating employers to pool their plan assets for investment purposes and reduce the cost of plan administration. A multiple-employer plan maintains separate accounts for each employer so that contributions provide benefits only for employees of the contributing employer.

G. The accounting requirements set forth in this interpretation focus on single- and multiple-employer plans. The accounting requirements set forth in Statement No. 106 for multiemployer plans or defined contribution plans shall be adopted for borrowers electing those types of plans.

H. Under the provisions of Statement No. 106, there are two components of the postretirement benefit cost: the current period cost and the transition obligation. The transition obligation is a one-time accrual of the costs resulting from services already provided. Statement No. 106 allows the transition obligation to be deferred and amortized on a straight-line basis over the average remaining service period of the active employees. If the average remaining service period of the active employees is less than 20 years, a 20-year amortization period may be used.

I. Accounting Requirements

A. All borrowers shall adopt the accrual accounting provisions and reporting requirements as set forth in Statement No. 106. The transition obligation and accrual of the current period cost must be based upon an actuarial study. This study must be updated to allow the borrower to comply with the measurement date requirements of Statement No. 106; however, the study must, at a minimum, be updated every five years. Borrowers may not account for postretirement benefits on a ''pay-as-you-go'' basis.

B. Under the provisions of Statement No. 106, an entity may recognize the transition obligation, in its entirety, when Statement No. 106 is first adopted or the entity may elect to delay the recognition of the transition obligation. On December 26, 1991, however, the FCC issued 6 FCC Rcd 7560, which requires telecommunications carriers to recognize the transition obligation on a delayed basis. RUS reviewed this issuance and has determined that borrowers must comply with this ruling and recognize the transition obligation on a delayed basis.

C. The deferral and amortization of the transition obligation on a delayed basis is considered to be an off balance sheet item. As a result, an accounting entry is not required at the time of adoption of Statement No. 106. Instead, the transition obligation is recognized as a component of postretirement benefit cost as it is amortized. The amount of the unamortized transition obligation must be disclosed in the notes to the financial statements.

D. In accordance with the provisions of Responsible Accounting Officer (RAO) Letter 20, released by the FCC on April 24, 1992, Account 4310, Other Long-Term Liabilities, shall be used to record the liability accrued for postretirement benefits. (RAO Letter 20 is available from the Federal Communications Commission, 1919 M Street, NW., Washington, DC 20554.) Borrowers shall credit this account for the net periodic cost of postretirement benefits for the current year and shall debit this account for any fund payments made during the current year.

E. Net periodic postretirement benefit cost includes current period service cost, interest cost, return on plan assets, amortization of prior service cost, gains and losses, and amortization of the transition obligation. If fund payments create a debit balance in the postretirement benefits portion of Account 4310, the debit balance applicable to postretirement benefits shall be reported in Account 1410, Other Noncurrent Assets. Account 1410 shall also be used to record any prepaid postretirement benefit cost.

F. The benefits portion of the expense matrix for the appropriate Part 32 expense accounts shall be used to record the current period service cost component of the current year's net periodic postretirement benefit cost. The interest cost component, return on plan assets, amortization of prior service cost, gains and losses, and amortization of the transition obligation shall be charged to the benefits portion of the expense matrix of Account 6728, Other General and Administrative.

II. Effective Date and Implementation

A. For plans outside the United States and for defined benefit plans of employers that (a) are nonpublic enterprises and (b) sponsor defined benefit postretirement plans with no more than 500 plan participants in the aggregate, Statement No. 106 is effective for fiscal years beginning after December 15, 1994. For all other plans, Statement No. 106 is effective for fiscal years beginning after December 15, 1992.

102 *Rural Telephone Bank Stock*

A. Capital stock issued by the Rural Telephone Bank consists of Class A, Class B, and Class C stock. Class A stock is issued only to the Administrator of RUS on behalf of the

United States in exchange for capital furnished to RTB.

B. Class B stock is issued only to recipients of loans under Section 408 of the Rural Electrification Act (RE Act). Borrowers receiving loan funds pursuant to Section 408(a)(1) or (2) of the RE Act are required to invest 5 percent of the amount of loan funds approved in Class B stock. No dividends are payable on Class B stock. All holders of Class B stock are entitled to patronage refunds in the form of Class B stock under the terms and conditions specified in the bylaws of the RTB.

C. Class C stock is available for purchase by borrowers, corporations, and public bodies eligible to borrow under Section 408 of the RE Act, or by organizations controlled by such borrowers, corporations and public bodies. The payment of dividends is in accordance with the bylaws of the RTB.

Accounting Requirements

A. The purchase of RTB stock required by the RE Act shall be debited to Account 1402.1, Investments in Nonaffiliated Companies—Class B RTB Stock. Patronage refunds in the form of additional shares of RTB Class B Stock shall be debited to Account 1402.1 and credited to Account 1402.11, Investments in Nonaffiliated Companies—Class B RTB Stock—Cr.

B. Purchases of Class C RTB stock shall be debited to Account 1402.2, Investments in Nonaffiliated Companies—Class C RTB Stock. Cash dividends received on Class C RTB stock shall be credited to Account 7310, Dividend Income.

C. Once a borrower has repaid all of its RTB loans, it may request that its Class B stock be converted to Class C stock. When the conversion is made, Account 1402.2 shall be debited and Account 1402.1 shall be credited for the face value of the stock converted. Account 1402.21, Investments in Nonaffiliated Companies—Class C RTB Stock—Cr., shall be credited and Account 1402.11 shall be debited for the face value of the Class B stock that has been received as patronage refunds.

103 *Cushion of Credit Investments*

A. The RUS Cushion of Credit account is an investment account bearing an interest rate of 5 percent. All voluntary payments or overpayments on Rural Electric and Telephone Revolving Fund (RETRF) loans made after October 1, 1987, are deposited into this account in the appropriate borrower's name.

Accounting Requirements

A. The following journal entries shall be used by RUS borrowers to record the transactions associated with cushion of credit payment:

1. Dr. 4210.18, RUS Notes—Advance Payments, Dr. Cr. 1130.1/1120.11, Cash—General Fund. To record the cushion of credit payment.
2. Dr. 4210.18, RUS Notes—Advance Payments, Dr. Cr. 7320/7300.2, Interest Income. To record interest earned on cushion of credit deposits.
3. Dr. 4210.12, RUS Notes, Cr. 4210.18, RUS Notes—Advance Payments, Dr. To apply cushion of credit payments (and interest) to the RUS note.

104 *Rural Economic Development Loan and Grant Program*

A. On December 21, 1987, Section 313, Cushion of Credit Payments Program (7 U.S.C. 901 et seq.), was added to the RE Act. Section 313 establishes a Rural Economic Development Subaccount and authorizes the Administrator of the RUS to provide zero interest loans or grants to RE Act borrowers for the purpose of promoting rural economic development and job creation projects. Effective December 5, 1994, this authority was assigned to the Administrator, Rural Business and Cooperative Development Service.

B. 7 CFR part 1703, Subpart B, Rural Economic Development Loan and Grant Program, sets forth the policies and procedures relating to the zero interest loan program and for approving and administering grants.

Accounting Requirements

A. The accounting journal entries required to record the transactions associated with a Rural Economic Development grant are as follows:

1. Dr. 1130.4/1120.14, Cash—General Fund—Economic Development Grant Funds. Cr. 4210.25, RUS Notes—Economic Development Grant; Cr. 4540.41, Other Capital—Miscellaneous; or Cr. 7360/7300.6, Other Nonoperating Income. To record grant funds disbursed by RUS. If the grant agreement requires repayment of the funds upon termination of the revolving loan program, Account 4210.25 shall be credited. If the grant agreement states that there is absolutely no obligation for repayment upon termination of the revolving loan program, the funds shall be accounted for as a permanent infusion of capital by crediting Account 4540.41. If, however, the grant agreement is silent as to the final disposition of the grant funds, Account 7360/7300.6 shall be credited.
2. Dr. 1401.1, Other Investments in Affiliated Companies—Federal Economic Development Grant Loans or Dr. 1402.4, Other Investments in Nonaffiliated Companies—Federal Economic Development Grant Loans Cr. 1130.4/1120.14, Cash—General Fund—Economic Development Grant Funds. To record a Federal revolving loan to an economic development

project.

3. Dr. 1130.1/1120.11, Cash—General Fund. Cr. 7360/7300.6, Other Nonoperating Income. To record payment of loan servicing fees charged to the economic development project.
4. Dr. 1130.5/1120.15, Cash—General Fund—Economic Development Non-Federal Revolving Funds. Cr. 1401.1, Other Investments in Affiliated Companies —Federal Economic Development Grant Loans or Cr. 1402.4, Other Investments in Nonaffiliated Companies—Federal Economic Development Grant Loans. To record the repayment, by the project, of the Federal revolving loan.
5. Dr. 1401.2, Other Investments in Affiliated Companies—Non-Federal Economic Development Grant Loans or Dr. 1402.5, Other Investments in Nonaffiliated Companies—Non-Federal Economic Development Grant Loans. Cr. 1130.5/1120.15, Cash—General Fund—Economic Development Non-Federal Revolving Funds. To record a Non-Federal revolving loan to an economic development project.
6. Dr. 1210, Interest and Dividends Receivable Cr. 7320/7300.2, Interest Income. To record the interest earned on a Non-Federal revolving loan to an economic development project.
7. Dr. 1130.5/1120.15, Cash—General Fund—Economic Development Non-Federal Revolving Funds. CR. 1401.2, Other Investments in Affiliated Companies—Non-Federal Economic Development Grant Loans or Cr. 1402.5, Other Investments in Nonaffiliated Companies—Non-Federal Economic Development Grant Loans. To record the repayment, by the project, of the Non-Federal revolving loan.

B. The accounting journal entries required to record the transactions associated with a Rural Economic Development loan are as follows:

1. Dr. 4210.26, Economic Development Notes—Unadvanced, Fr. Cr. 4210.25, Economic Development Notes. To record the contractual obligation to RUS for the Economic Development Notes.
2. Dr. 1130.6/1120.16, Cash—General Fund—Economic Development Loan Funds Cr. 4210.26, Economic Development Notes—Unadvanced, Dr. To record the receipt of the economic development loan funds.
3. Dr. 1401.3, Other Investments in Affiliated Companies—Federal Econmic Development Loans or Dr. 1402.6, Other Investments in Nonaffilitated Companies—Federal Economic Development Loans. Cr. 1130.6/1120.16, Cash—General Fund—Ecoomice Development Loan Funds. To record the discursement of economci development loand funds to the project.
4. Dr. 1130.1/1120.11, Cash—General Fund. Cr. 7360/7300.6, Other Nonoperating Income. To record payment of loan servicing fees charged to the economic development project.
5. Dr. 1210, Interest and Dividends Receivable Cr. 7320/7300.2, Interest Income. To record the interest earned on the investment of rural economic development loan funds.
6. Dr. 7370, Special Charges. Cr. 1130.1, Cash—General Funds. To record the payment of interest earned in excess of $500 on the investment of rural economic development loan funds. NOTE: Interest earned in excess of $500 must be used for the rural economic development project for which the loan funds were received or returned to RUS.
7. Dr. 1130.6/1120.16, Cash—General Fund—Economic Development Loan Funds. Cr. 1401.3, Other Investments in Affiliated Companies—Federal Economic Development Loans or Cr. 1402.6, Other Investments in Nonaffiliated Companies—Federal Economic Development Loans. To record repayment, by the project, of the economic development loan.
8. Dr. 4210.25, Economic Development Notes. Cr. 1130.6/1120.16, Cash—General Fund—Economic Development Loan Funds. To record the repayment, to RUS, of the economic development loan funds.

105 *Satellite and Cable Television Services*

A. Many RUS borrowers have become involved in providing either satellite or cable television services to their members and others through subsidiaries, joint ventures, or as segments of their current operations.

Accounting Requirements

A. This section outlines the accounting to be followed when recording transactions involving satellite or cable television services.

1. Separate Subsidiary. If a borrower provides satellite or cable television services through a separate subsidiary, the investment in the subsidiary shall be debited to Account 1401, Investments in Affiliated Companies. The net income or loss of the subsidiary shall be debited or credited to Account 1401, as appropriate, with an offsetting entry to Account 7360, Other Nonoperating Income.

2. *Joint Venture.* i. If a borrower provides satellite or cable television services through a joint venture, the borrower's ownership interest dictates the accounting methodology. If the borrower has less than a 20 percent ownership interest in the joint venture, the investment is accounted for under the cost method of accounting in Account 1402, Investments in Nonaffiliated Companies. Under the cost method, the joint venture's net income or loss is not recorded in the borrower's records. Income is recognized only to the extent of any dividends declared by the joint venture. When a dividend is declared,

the borrower shall debit Account 1210, Interest and Dividends Receivable, and credit Account 7310, Dividend Income. When the dividend is received in cash, the borrower shall debit Account 1130.1, Cash—General Fund, and credit Account 1210.

ii. If a borrower has a 20-percent or more ownership interest in the joint venture, the investment is accounted for under the equity method in Account 1401, Investments in Affiliated Companies. The borrower's proportionate share of the joint venture's net income or loss shall be debited or credited to Account 1401, as appropriate, with an offsetting entry to Account 7360, Other Nonoperating Income.

3. *Segment of Current Operations.* i. If a borrower provides satellite or cable television service as a segment of its current operations and there are no shared assets between this activity and the regulated telecommunications activities of the borrower, the investment shall be debited to Account 1406.1, Nonregulated Investments—Permanent Investment. The net income or loss from providing such service shall be debited or credited, as appropriate, to Account 1406.3, Nonregulated Investments—Current Net Income, with an offsetting entry to Account 7990, Nonregulated Net Income.

ii. If a borrower provides satellite or cable television service as a segment of current operations and shares assets between this activity and the regulated telecommunications activities of the borrower, the franchise and application fees shall be debited to a subaccount of Account 2690, Intangibles. The cost of the satellite or cable television equipment shall be debited to a subaccount of Account 2231, Radio Systems. Revenues earned from providing satellite or cable service shall be credited to Account 5280, Nonregulated Operating Revenue, while the associated expenses shall be recorded in a subaccount of the applicable regulated expense accounts.

4. *Sale and Installation of Satellite or Cable Television Equipment.* i. If a borrower sells or installs satellite or cable television equipment as a segment of its current operations and there are no shared assets between this activity and the regulated telecommunications activities of the borrower, the purchase of the equipment shall be debited to Account 1406.1, Nonregulated Investments—Permanent Investment. The net income or loss from providing such services shall be debited or credited, as appropriate, to Account 1406.3, Nonregulated Investments—Current Net Income, with an offsetting entry to Account 7990, Nonregulated Net Income.

ii. If a borrower sells or installs satellite or cable television equipment as a segment of its current operations and shares assets between this activity and the regulated telecommunications activities of the borrower, the purchase of the equipment shall be debited to Account 1220.2, Property Held for Sale or Lease. Revenues received for the sale or installation of the equipment shall be credited to Account 5280, Nonregulated Operating Revenue, while the associated expenses shall be debited to a subaccount of the applicable regulated expense accounts.

106 *Consolidated Financial Statements*

A. In October 1987, FASB issued Statement of Financial Accounting Standards No. 94, Consolidation of All Majority-Owned Subsidiaries (Statement No. 94). (Statement 94 is available from the Financial Accounting Standards Board, 401 Merritt 7, P.O. Box 5116, Norwalk, CT 06856–5116.) For purposes of reporting to RUS, Statement No. 94 shall be applied as follows:

1. A borrower that is a subsidiary of another entity shall prepare and submit to RUS separate financial statements even though this financial information is presented in the parent's consolidated statements.

2. In those cases in which a borrower has a majority-ownership in a subsidiary, the borrower shall prepare consolidated financial statements in accordance with the requirements of Statement No. 94. These consolidated statements must also include supplementary schedules presenting a Balance Sheet and Income Statement for each majority-owned subsidiary included in the consolidated statements.

B. Although Statement No. 94 requires the consolidation of majority-owned subsidiaries, the RUS Form 479, Financial and Statistical Report for Telecommunications Borrowers, shall be prepared on an unconsolidated basis by all borrowers.

PART 1773—POLICY ON AUDITS OF RUS BORROWERS

Subpart A—General Provisions

Sec.
1773.1 General.
1773.2 Definitions.

Subpart B—RUS Audit Requirements

1773.3 Annual audit.
1773.4 Borrower responsibilities.
1773.5 Qualifications of CPA.
1773.6 Audit agreement.
1773.7 Audit standards.
1773.8 Audit date.
1773.9 Disclosure of irregularities and illegal acts.
1773.10 Access to audit-related documents.
1773.11—1773.19 [Reserved]

Subpart C—RUS Requirements for the Submission and Review of the Auditor's Report, Report on Compliance, Report on Internal Controls, and Management Letter

1773.20 CPA's submission of the auditor's report, report on compliance, report on internal controls, and management letter.
1773.21 Borrower's review and submission of the auditor's report, report on compliance, report on internal controls, and management letter.
1773.22—1773.29 [Reserved]

Subpart D—RUS Reporting Requirements

1773.30 General.
1773.31 Auditor's report.
1773.32 Report on compliance.
1773.33 Report on internal controls.
1773.34 Management letter.
1773.35—1773.37 [Reserved]

Subpart E—RUS Required Audit Procedures and Documentation

1773.38 Scope of engagement.
1773.39 Utility plant and accumulated depreciation.
1773.40 Regulatory assets.
1773.41 Extraordinary retirement losses.
1773.42 Clearing accounts.
1773.43 Capital and equity accounts.
1773.44 Long-term debt.
1773.45 Regulatory liabilities.
1773.46—1773.49 [Reserved]

APPENDIX A TO PART 1773—SAMPLE AUDITOR'S REPORT FOR AN ELECTRIC COOPERATIVE
APPENDIX B TO PART 1773—SAMPLE AUDITOR'S REPORT FOR A CLASS A OR B COMMERCIAL TELEPHONE COMPANY
APPENDIX C TO PART 1773—ILLUSTRATIVE INDEPENDENT AUDITOR'S MANAGEMENT LETTER

AUTHORITY: 7 U.S.C. 901 *et seq.*; 7 U.S.C. 1921 *et seq.*; Pub. L. 103–354, 108 Stat. 3178 (7 U.S.C. 6941 *et seq.*).

SOURCE: 56 FR 63360, Dec. 3, 1991, unless otherwise noted.

Subpart A—General Provisions

§ 1773.1 General.

(a) This part implements those standard provisions of the security instrument utilized by the Rural Utilities Service (RUS) for both electric and telephone borrowers and by the Rural Telephone Bank (RTB) for its telephone borrowers. The provisions require borrowers to prepare and furnish to RUS, at least once during each 12-month period, a full and complete report of its financial condition, operations, and cash flows, in form and substance satisfactory to RUS, audited and certified by an independent certified public accountant (CPA), satisfactory to RUS, and accompanied by a report of such audit, in form and substance satisfactory to RUS.

(b) This part 1773 applies to both RUS and RTB borrowers. For the purposes of RTB borrowers, as used in this part 1773, *RUS* means *RTB* and *Administrator* means *Governor* unless the text indicates otherwise.

(c) This part complies with the 1994 revision of Government Auditing Standards, issued by the Comptroller General of the United States, United States General Accounting Office.

(d) An auditor's report, report on compliance, report on internal controls, and management letter are required to meet the reporting provisions of the RUS security instrument.

(1) The auditor's report must state that the audit was conducted in accordance with generally accepted government auditing standards (GAGAS).

(2) The management letter must state that the audit was conducted in accordance with this part.

(3) A report of the audit, in form and substance satisfactory to RUS, cannot be issued unless and until an audit has been performed in accordance with GAGAS and this part.

(4) A borrower is in violation of provisions of its security instrument with RUS if the borrower fails to provide an audit performed in compliance with GAGAS and this part. RUS security instruments normally provide for notice and an opportunity to cure such violations before RUS can exercise certain remedies.

(5) A report prepared in connection with a review or compilation of financial statements, as defined in Statement of Standards for Accounting and Review Services No. 1, Compilation and Review of Financial Statements, does not satisfy the requirements of the RUS security instrument.

(6) A report, as described in Statement on Auditing Standards (SAS) No. 62, entitled ''Special Reports'', or in SAS No. 35, entitled ''Special Reports—Applying Agreed-upon Procedures to

Specified Elements, Accounts, or Items of a Financial Statement'', does not satisfy the RUS loan security instrument requirements.

(7) An annual report containing audited financial statements does not satisfy the RUS security instrument requirements.

(e) This part further implements those provisions of the standard RUS security instrument by setting forth the criteria for CPAs to be deemed satisfactory to RUS and the audit procedures and documentation standards that must be performed before a report of the audit satisfactory to RUS can be prepared and issued.

[56 FR 63360, Dec. 3, 1991, as amended at 61 FR 107, Jan. 3, 1996]

§1773.2 Definitions.

As used in this part:

Administrator means the Administrator of RUS and, as provided in §1773.2 (b), *Governor*.

AICPA means the American Institute of Certified Public Accountants.

Audit means an examination of financial statements by an independent CPA for the purpose of expressing an opinion on the fairness with which those statements present financial position, results of operations, and changes in cash flows in conformity with generally accepted accounting principles (GAAP) and for determining whether the borrower has complied with applicable laws, regulations, and contracts for those transactions and events reflected in the financial statements.

BAD means the Borrower Accounting Division of RUS.

CPA means certified public accountant. The terms *CPA* and *CPA firm* are used interchangeably.

FFB means the Federal Financing Bank, an instrumentality and wholly owned corporation of the United States.

GAAP means generally accepted accounting principles.

GAGAS means generally accepted government auditing standards as set forth in Government Auditing Standards, Standards for Audit of Governmental Organizations, Programs, Activities, and Functions, issued by the Comptroller General of the United States.

GAO means the General Accounting Office.

Governor means the Governor of the RTB.

Illegal act has the meaning prescribed in SAS No. 54, entitled ''Illegal Acts by Clients''.

Irregularity has the meaning prescribed in SAS No. 53, entitled ''The Auditor's Responsibility to Detect and Report Errors and Irregularities''.

OIG means the Office of Inspector General, United States Department of Agriculture.

OMB means the Office of Management and Budget.

PCPS means the Private Companies Practice Section of the AICPA.

REA means the Rural Electrification Administration formerly an agency of the United States Department of Agriculture and predecessor agency to RUS with respect to administering certain electric and telephone loan programs.

Regulatory asset means an asset resulting from an action of a regulator as prescribed in Statement of Financial Accounting Standards (SFAS) No. 71, entitled ''Accounting for the Effects of Certain Types of Regulation''.

Regulatory liability means a liability imposed on a regulated enterprise by an action of a regulator as prescribed in SFAS No. 71, entitled ''Accounting for the Effects of Certain Types of Regulation''.

Related party has the meaning prescribed in SFAS No. 57, entitled ''Related Party Disclosures''.

Related party transaction has the meaning prescribed in SFAS No. 57, entitled ''Related Party Disclosures''.

Reportable condition has the meaning prescribed in SAS No. 60, entitled ''Communication of Internal Control Structure Related Matters Noted in an Audit''.

RTB means the Rural Telephone Bank.

RUS means the Rural Utilities Service, an agency of the United States Department of Agriculture established pursuant to Section 232 of the Federal Crop Insurance Reform and Department of Agriculture Reorganization Act of 1994 (Pub. L. 103–354, 108 Stat. 3178), successor to REA with respect to administering certain electric and telephone programs. See 7 CFR 1700.1.

SAS means Statement on Auditing Standards as prescribed by the AICPA.

SEC Practice Section means the Securities and Exchange Commission Practice Section of the AICPA.

SFAS means Statements of Financial Accounting Standards as prescribed by the Financial Accounting Standards Board.

State means any state or territory of the United States, or the District of Columbia.

Uniform System of Accounts means, for telephone borrowers, the Uniform System of Accounts for Telecommunications Companies, prescribed by the Federal Communications Commission and set forth at 47 CFR part 32, as supplemented by RUS pursuant to 7 CFR part 1770, Accounting Requirements for RUS Telephone Borrowers, subpart B, Uniform System of Accounts, and, for electric borrowers, the Uniform System of Accounts Prescribed for Electric Borrowers of the RUS.

[56 FR 63360, Dec. 3, 1991, as amended at 59 FR 66440, Dec. 27, 1994; 60 FR 2874, Jan. 12, 1995]

Subpart B—RUS Audit Requirements

§ 1773.3 Annual audit.

(a) Each borrower must have its financial statements audited annually by a CPA selected by the borrower and approved by RUS as set forth in § 1773.4.

(b) Each borrower must establish an annual as of audit date within twelve months of the date of receipt of the first advance of RUS or FFB loan funds and must prepare financial statements as of the date established.

(c) Until all loans made or guaranteed by RUS have been repaid, the borrower must furnish three copies of the auditor's report, report on compliance, report on internal controls, and management letter to RUS within 120 days of the as of audit date.

(d) A borrower that qualifies as a unit of state or local government or Indian tribe as such terms are defined in the Single Audit Act of 1984 (31 U.S.C. 7501 *et seq.*) and OMB Circular A–128, Audits of State and Local Governments, must comply with this part as follows:

(1) A borrower that receives total Federal financial assistance equal to or in excess of $100,000 during the fiscal year, must have an audit performed and submit an auditor's report meeting the requirements of the Single Audit Act of 1984 (31 U.S.C. 7501 *et seq.*).

(2) A borrower that receives total Federal financial assistance of between $25,000 and $100,000 during the fiscal year must have an audit performed in accordance with either the requirements of the Single Audit Act of 1984 (31 U.S.C. 7501 *et seq.*) or this part.

(3) A borrower that receives less than $25,000 in total Federal financial assistance during the fiscal year must have an audit performed in accordance with the requirements of this part.

(4) A borrower must notify RUS, in writing, within 30 days of the as of audit date, of the total Federal financial assistance received during the audit year and must state whether it will have an audit performed in accordance with the Single Audit Act of 1984 (31 U.S.C. 7501 *et seq.*) or this part.

(i) A borrower that elects to comply with this part must select a CPA that meets the qualifications set forth in § 1773.5.

(ii) If an audit is performed in accordance with the Single Audit Act of 1984 (31 U.S.C. 7501 *et seq.*), an auditor's report that meets the requirements of the Single Audit Act of 1984 (31 U.S.C. 7501 *et seq.*) will be sufficient to satisfy that borrower's obligations under this part.

(e) OMB Circular A–133, Audits of Institutions of Higher Education and Other Nonprofit Organizations, does not apply to audits of RUS borrowers.

[56 FR 63360, Dec. 3, 1991, as amended at 59 FR 659, Jan. 6, 1994]

§ 1773.4 Borrower responsibilities.

(a) *Selection of a qualified CPA.* The borrower's board of directors is responsible for the selection of a qualified CPA that meets the requirements set forth in § 1773.5. When selecting a CPA, the borrower should consider, among other matters:

(1) The qualifications of CPAs available to do the work;

(2) The CPA's experience in performing audits of utilities; and

(3) The CPA's ability to complete the audit and submit the reports and management letter within 90 days of the as of audit date.

(b) *Board approval of selection.* The board's approval of a CPA must be recorded by a board resolution that states:

(1) The CPA meets RUS's qualifications to perform an audit; and

(2) The borrower and CPA will enter into an audit agreement in accordance with §1773.6.

(c) *Notification of selection.* When the initial selection or subsequent change of a CPA by a borrower has been made, the borrower must notify RUS, in writing, at least 90 days prior to the as of audit date.

(1) RUS will notify the borrower, in writing, within 30 days of the date of receipt of such notice, if the selection or change in CPA is not satisfactory.

(2) Notification to RUS that the same CPA has been selected for succeeding audits of the borrower's financial statements is not required; however, the procedures outlined in this part must be followed for each new CPA selected, even though such CPA may previously have been approved by RUS to audit records of other RUS borrowers. Changes in the name of a CPA firm are considered to be a change in the CPA.

(d) *Audit agreement.* The borrower must enter into an audit agreement with the CPA that complies with §1773.6.

(e) *Debarment certification.* The borrower is responsible for the receipt, from the selected CPA, of a lower tier covered transaction certification, as required under the provisions of Executive Orders 12549 and 12689, Debarment and Suspension, and any rules or regulations issued thereunder.

(f) *Submission of auditor's report.* The borrower must submit to RUS the required auditor's report, report on compliance, report on internal controls, and management letter as set forth in §1773.21.

(1) An annual auditor's report, report on compliance, report on internal controls, and management letter that fail to meet the requirements detailed in this part will be returned to the borrower with a written explanation of noncompliance.

(2) The borrower must, within 60 days of the date of the letter detailing the noncompliance, submit corrected reports to RUS.

(3) If corrected reports are not received within 60 days of the date of the letter detailing the noncompliance, RUS may notify the borrower that a default has occurred under its security instrument or take other appropriate action. The default notice will set forth the period of time during which the default will be remedied.

(g) *Submission of plan of corrective action.* The borrower must submit written comments to RUS on the findings and recommendations in the auditor's report, report on compliance, report on internal controls, and management letter. The borrower must also submit to RUS:

(1) A written plan for corrective action taken or planned; and

(2) Comments on the status of corrective action taken on previously reported findings and recommendations.

If corrective action is not necessary, a written statement describing the reason it is not should accompany the auditor's report.

§1773.5 Qualifications of CPA.

For purposes of the RUS standard security instrument, any CPA that meets the qualifications criteria of this section and enters into an audit agreement with the borrower that complies with §1773.6, will be considered satisfactory to RUS.

(a) *Certification.* The accountant that audits the financial statements of an RUS borrower must be a CPA in good standing of some state. The CPA does not have to be licensed by the state in which the borrower is located; however, the CPA must abide by the rules and regulations of professional conduct promulgated by the accountancy board of the state in which the borrower is located.

(b) *Independence.* The CPA must be independent. A CPA will be considered independent if the CPA:

(1) Meets the standards for independence contained in the AICPA Code of Professional Conduct in effect at the time the CPA's independence is under review;

(2) Does not have and has not had any direct financial interest or any material indirect financial interest in the borrower during the period covered by the audit; and

(3) Is not and was not, during the period under audit, connected with the borrower as a promoter, underwriter, trustee, director, officer, or employee.

(c) *Peer review requirement.* The CPA must belong to and participate in a peer review program, and must have undergone a satisfactory peer review of the accounting and audit practice conducted by an approved peer review program under paragraph (c)(4) of this section, unless a waiver is granted under paragraph (c)(7) of this section. The reviewing organization must not be affiliated with or have had its most recent peer review conducted by the organization currently being reviewed (reciprocal reviews). After the initial peer review has been performed, the CPA must undergo a peer review of the accounting and audit practice within 42 months of the previous ''as of'' peer review date or at such additional times as designated by the peer review executive committee.

(1) A CPA that receives an unqualified peer review report will be satisfactory to RUS provided that the CPA meets the other criteria set forth in this section.

(2) If a CPA receives a qualified or adverse peer review report, the CPA must undergo a second peer review within 18 months of the date of the qualified or adverse report. A CPA that receives an unqualified second peer review report will be satisfactory to RUS provided that the CPA meets the other criteria set forth in this section.

(3) A CPA that receives a second qualified or adverse peer review report will not be satisfactory to RUS.

(4) *Approved peer review programs.* The following peer review programs are approved by RUS:

(i) The peer review programs conducted by the AICPA;

(ii) The peer review program conducted by the regulated audit program group of the National Conference of CPA Practitioners; and

(iii) An independent peer review program that, in RUS's determination, requires its members to:

(A) Ensure that the CPA can legally engage in the practice of certified public accounting;

(B) Adhere to the quality control standards established by the AICPA;

(C) Submit to peer reviews of the CPA's accounting and audit practice every 42 months or at such additional times as designated by its own executive committee; and

(D) Ensure that all professionals in the firm, including CPAs and nonCPAs, take part in the qualifying continuing professional education requirements of GAGAS, as set forth in paragraphs (c)(4)(iii)(D)(*1*) and (c)(4)(iii)(D)(*2*). A qualified continuing professional education course is one which meets the standards of the AICPA.

(*1*) An auditor responsible for planning, directing, conducting, or reporting on government audits must complete, every two years, at least eighty hours of continuing education and training which contributes to the auditor's professional proficiency. At least twenty hours must be completed in any one year of the two-year period; and

(*2*) An individual responsible for planning, directing, and conducting substantial portions of the field work, or reporting on the government audit must complete at least 24 of the 80 hours of continuing education and training in subjects directly related to the government environment and to government auditing. If the audited entity operates in a specific or unique environment, auditors must receive training that is related to that environment.

(5) *Notification.* The CPA must notify the Director, BAD, in writing, of participation in a peer review program. RUS will notify the CPA within 60 days of receipt of this notice if the selected peer review program is acceptable.

(6) *Submission of reports.* The CPA must submit to the Director, BAD, a copy of any peer review report and accompanying letter of comment, if any, within 60 days of the date such report and letter of comment are released by the peer review group.

(i) If the peer review report indicates that a follow-up review will be made, the CPA must submit subsequent reports to the Director, BAD, within 60

days of the date such reports are released by the peer review group.

(ii) A peer review report must be submitted to the Director, BAD, at least once every 42 months, or more frequently, if required by the peer review program.

(iii) A copy of the peer review report, accompanying letter of comment, and the partners' inspections must be made available to OGC, upon request.

(7) *Waiver of the peer review requirement.* (i) A CPA may request that the Administrator, RUS, waive the peer review requirement. To be eligible for a waiver, the following criteria must be met:

(A) The firm has been in existence for less than 1 year from the date of the request and has not been previously organized under a different name;

(B) One of the partners organizing the firm has previously, within 18 months preceding the request, worked for a firm that has been peer reviewed and the partner was partner-in-charge of audits of RUS borrowers in the previous firm;

(C) The firm has enrolled in an approved peer review program; and

(D) The firm agrees to have the peer review conducted within 18 months of the date of the RUS waiver.

(ii) Waiver requests must address each of the criteria in paragraph (c)(7)(i) of this section and should be submitted to the Director, Borrower Accounting Division.

(d) *Audit agreement.* The CPA must enter into an audit agreement with the borrower that complies with §1773.6.

[56 FR 63360, Dec. 3, 1991, as amended at 61 FR 107, Jan. 3, 1996]

§1773.6 Audit agreement.

(a) An audit agreement must be entered into between the CPA and the borrower. The audit agreement must set forth the auditor's responsibilities in a financial statement audit, including the responsibilities for testing and reporting on internal controls and compliance with laws and regulations and the nature of any additional testing of internal controls and compliance required by laws and regulations. These responsibilities should be contrasted with the additional procedures that could be performed that would result in additional assurances or opinions on the internal control structure and compliance with laws and regulations. The audit agreement must also include the following:

(1) The borrower and the CPA acknowledge that the audit is being performed and the auditor's report, report on compliance, report on internal controls, and management letter is being issued in order to enable the borrower to comply with the provisions of RUS's security instrument;

(2) The borrower and CPA acknowledge that RUS will consider the borrower to be in violation of its security instrument with RUS if the borrower fails to have an audit performed and documented in compliance with GAGAS and this part;

(3) The CPA represents that he/she meets the requirements under this part to be satisfactory to RUS;

(4) The CPA will perform the audit and will prepare the auditor's report, report on compliance, report on internal controls, and management letter in accordance with the requirements of this part;

(5) The CPA will document the audit work performed in accordance with GAGAS, the professional standards of the AICPA, and the requirements of this part;

(6) The CPA will make all audit-related documents, including auditor's reports, workpapers, and management letters available to RUS or its representatives (OGC and GAO), upon request, and will permit the photocopying of all audit-related documents; and

(7) The CPA will follow the requirements of reporting irregularities and illegal acts as outlined in §1773.9.

(b) The audit agreement may include such additional terms and conditions as the CPA and borrower deem appropriate, including, but not limited to:

(1) The CPA will report all audit findings to the board of directors as required in §1773.20(b); and

(2) The auditor's report, report on compliance, report on internal controls, and management letter with copies for transmittal to RUS, and supplemental lenders, if applicable, will be submitted to the borrower's board of

directors within 90 days of the as of audit date;

(c) A copy of the audit agreement must be available at the borrower's office for inspection by RUS personnel. One copy of the current audit agreement must be maintained in the CPA's workpapers or permanent file.

[56 FR 63360, Dec. 3, 1991, as amended at 61 FR 108, Jan 3, 1996]

§ 1773.7 Audit standards.

(a) The audit must be performed in accordance with GAGAS and this part. The audit must be performed in accordance with GAGAS in effect at the audit date unless the borrower is directed otherwise, in writing, by RUS.

(b) The audit must include such tests of the accounting records and such other auditing procedures that are sufficient to enable the CPA to express an opinion on the financial statements and to issue the required reports on compliance and internal controls and the management letter.

(c) Audit scope limitation. (1) The borrower will not limit the scope of the audit to the extent that the CPA is unable to meet RUS's audit requirements or to provide an unqualified opinion that the financial statements are presented fairly in conformity with GAAP.

(2) The security instrument provision requiring the submission of a report of the audit is not satisfied if the CPA must qualify the opinion in the auditor's report due to limitations placed on the scope of the audit by the borrower.

(3) If the CPA determines during the audit that an unqualified opinion cannot be issued due to a scope limitation imposed by the borrower, the CPA should use professional judgment to determine what levels of the borrower's management should be informed.

(4) After informing the borrower's management, if the scope limitation is not adequately resolved, the CPA should immediately contact the Director, BAD, RUS, U.S. Department of Agriculture, Washington, DC 20250–1500. The Director, BAD, will endeavor to resolve the matter with the borrower.

§ 1773.8 Audit date.

(a) The annual audit must be performed as of the end of the same calendar month each year unless prior approval to change the as of audit date is obtained, in writing, from RUS.

(1) A borrower may request a change in the as of audit date by writing to the appropriate RUS regional office at least 60 days prior to the newly requested as of audit date.

(2) The time period between the prior as of audit date and the newly requested as of audit date must be no longer than twenty-four months. For example, a borrower that wishes to change its as of audit date from December 31, 19X1, to June 30, must make the change effective no later than June 30, 19X3.

(b) Comparative financial statements must be prepared and audited for the twelve months ending as of the new audit date and for the twelve months immediately preceding that period.

(c) A borrower that changes its as of audit date from December 31, 19X1, to June 30, 19X3, must have the CPA report on statements in the following manner:

Previously issued statements	Statements prepared as of new audit date
12/31/X1; 12/31/X0 (Statements need not be reissued).	6/30/X3; 6/30/X2

§ 1773.9 Disclosure of irregularities and illegal acts.

(a) In accordance with GAGAS, the CPA must design audit steps and procedures to provide reasonable assurance of detecting errors, irregularities, illegal acts, and noncompliance with the provisions of contracts or grant agreements that could have a direct and material effect on financial statement amounts.

(b) If there is an indication that an irregularity may have occurred or evidence concerning the existence of a possible instance of noncompliance with the provisions of contracts or grant agreements that could have a material direct or indirect effect on the financial statements, the CPA must extend audit steps and procedures to obtain sufficient, competent evidential matter to determine whether, in

fact, an irregularity or an instance of noncompliance has occurred and the effect on the borrower's financial statements.

(c) Pursuant to the terms of its audit agreement with the borrower, the CPA must immediately report, in writing, all irregularities and all indications or instances of illegal acts, whether material or not, to:

(1) The president of the borrower's board of directors;

(2) The Director, BAD; and

(3) OIG, as follows:

(i) For the States of Delaware, District of Columbia, Maryland, Pennsylvania, Virginia, West Virginia, Connecticut, Maine, Massachusetts, New Hampshire, New Jersey, New York, Puerto Rico, Rhode Island, Vermont and the Virgin Islands, report to USDA–OIG–Audit, Northeast Region, Regional Inspector General, 6505 Belcrest Road, room 428–A, Hyattsville, Maryland 20782;

(ii) For the States of Alabama, Florida, Georgia, Kentucky, Mississippi, North Carolina, South Carolina, and Tennessee, report to USDA–OIG–Audit, Southeast Region, Regional Inspector General, 401 W. Peachtree Street, NW., room 2328, Atlanta, Georgia 30365–3520;

(iii) For the States of Illinois, Indiana, Michigan, Minnesota, Ohio, and Wisconsin, report to USDA–OIG–Audit, Midwest Region, Regional Inspector General, 111 N. Canal Street, Suite 1130, Chicago, Illinois 60606;

(iv) For the States of Arkansas, Louisiana, New Mexico, Oklahoma, and Texas, report to USDA–OIG–Audit, Southwest Region, Regional Inspector General, 101 South Main, room 324, Temple, Texas 76501;

(v) For the States of Colorado, Iowa, Kansas, Missouri, Montana, Nebraska, North Dakota, South Dakota, Wyoming, and Utah, report to USDA–OIG–Audit, Great Plains Region, Regional Inspector General, P.O. Box 293, Kansas City, Missouri 64141; and

(vi) For the States of Alaska, Arizona, California, Hawaii, Idaho, Nevada, Oregon, Territory of Guam, Trust Territories of Pacific, and Washington, report to USDA–OIG–Audit, Western Region, Regional Inspector General, 555 Battery Street, room 511, San Francisco, California 94111.

[56 FR 63360, Dec. 3, 1991, as amended at 61 FR 108, Jan. 3, 1996]

§ 1773.10 Access to audit-related documents.

Pursuant to the terms of the audit agreement, the CPA must make all audit-related documents, including auditors' reports, workpapers, and management letters available to RUS, or its designated representative, upon request and must permit RUS, or its designated representative, to photocopy all audit-related documents.

§§ 1773.11—1773.19 [Reserved]

Subpart C—RUS Requirements for the Submission and Review of the Auditor's Report, Report on Compliance, Report on Internal Controls, and Management Letter

§ 1773.20 CPA's submission of the auditor's report, report on compliance, report on internal controls, and management letter.

(a) *Time limit.* As soon as possible after completion of the audit, but within 90 days of the as of audit date, the CPA should deliver the auditor's report, report on compliance, report on internal controls, and management letter to the president of the borrower's board of directors. As a minimum, copies should be provided for each member of the board of directors and the manager. Further, three copies must be provided to the borrower for transmittal to RUS.

(b) *Communication with the board of directors.* In addition to providing sufficient copies of the auditor's report, report on compliance, report on internal controls, and management letter for each member of the borrower's board of directors, RUS requires that the CPA report all audit findings to the borrower's board of directors. RUS recommends that audit findings be communicated orally; however, the communication may be oral or written, at the borrower's discretion. If the information is communicated orally, the

CPA must document the communication by appropriate memoranda or notations in the workpapers. If the CPA communicates in writing, a copy of the written communication must be included in the CPA's audit workpapers or permanent file.

(c) *Matters to be communicated.* Matters communicated to the board of directors must include, but are not limited to the matters to be communicated to the audit committee as prescribed in SAS No. 61, entitled ''Communication with Audit Committee'',:

(1) The initial selection of and changes in significant accounting policies;

(2) The methods used to account for significant or unusual transactions and the effects of significant accounting policies in controversial or emerging areas;

(3) The process utilized by management to formulate significant accounting estimates and the basis for the CPA's conclusions regarding the reasonableness of these estimates;

(4) Audit findings and recommendations, including audit adjustments that either individually or in the aggregate have a significant effect on the borrower's financial statements;

(5) The CPA's responsibility for other information presented with the audited financial statements, any audit procedures performed, and the results thereof;

(6) Any disagreements with management, whether or not satisfactorily resolved, concerning matters that individually or in the aggregate may be significant to the borrower's financial statements or the auditor's report, report on compliance, report on internal controls, or management letter;

(7) Significant matters that were the subject of consultations with other accountants;

(8) Significant issues discussed with management with regard to the initial or recurring retention of the CPA; and

(9) Any serious difficulties encountered in dealing with management during the performance of the audit.

[56 FR 63360, Dec. 3, 1991, as amended at 59 FR 659, Jan. 6, 1994]

§ 1773.21 Borrower's review and submission of the auditor's report, report on compliance, report on internal controls, and management letter.

(a) The borrower's board of directors should note and record receipt of the auditor's report, report on compliance, report on internal controls, and management letter and any action taken in response to the reports or management letter in the minutes of the board meeting at which such reports and management letter are presented.

(b) The borrower must furnish RUS with three copies of the auditor's report, report on compliance, report on internal controls, and management letter within 120 days of the as of audit date. Any provision in RUS's security instrument that requires such documents to be furnished to RUS in a shorter period of time may be disregarded.

(c) The borrower must furnish RUS with three copies of its plan for corrective action, if any, within 180 days of the as of audit date.

(d) The borrower must furnish RUS, within 120 days of the as of audit date, with a copy of each special report, summary of recommendations or similar communications, if any, received from the CPA as a result of the audit.

[56 FR 63360, Dec. 3, 1991, as amended at 59 FR 659, Jan. 6, 1994]

§§ 1773.22—1773.29 [Reserved]

Subpart D—RUS Reporting Requirements

§ 1773.30 General.

(a) The CPA must prepare the following:

(1) An auditor's report, examples of which are set forth in appendixes A, exhibit 1 (Electric), and B, exhibit 1 (Telephone) of this part 1773;

(2) A report on compliance, examples of which are set forth in appendixes A, exhibits 2 through 4 (Electric) and B, exhibits 2 through 4 (Telephone) of this part 1773;

(3) A report on internal controls, examples of which are set forth in appendixes A, exhibits 5 and 6 (Electric) and B, exhibits 5 and 6 (Telephone) of this part 1773; and

(4) A management letter, an example of which is set forth in appendix C of this part 2773.

(b) The CPA should deliver the auditor's report, report on compliance, report on internal controls, and management letter (with copies as required in §1773.20) to the borrower as soon as possible after completion of the audit but not more than 90 days after the as of audit date.

§1773.31 Auditor's report.

The CPA must prepare a written report on comparative balance sheets, statements of revenue and patronage capital (or income and retained earnings, depending upon the structure of the borrower) and statements of cash flows. This report must be signed by the CPA, cover all statements presented, and refer to the separate reports on internal controls and on compliance with laws and regulations issued in conjunction with the auditor's report.

[61 FR 108, Jan. 3, 1996]

§1773.32 Report on compliance.

(a) As required by GAGAS, the CPA must prepare a written report on the tests performed for compliance with applicable laws, regulations, contracts, and grants. This report must be signed by the CPA and must contain the status of known but uncorrected significant or material findings and recommendations from prior audits that affect the current audit objective.

(b) If, based upon assessments of materiality and audit risk, the CPA concludes that it is not necessary to perform tests of compliance with laws, regulations, and contracts, the CPA must issue a report as illustrated in appendix A, exhibit 2 (Electric) and appendix B, exhibit 2 (Telephone) of this part 1773.

(c) If the CPA determines that testing for compliance with laws, regulations, and contracts is necessary, and no material instances of noncompliance are found, the CPA must issue a report as illustrated in appendix A, exhibit 3 (Electric), and appendix B, exhibit 3 (Telephone) of this part 1773.

(d) If material instances of noncompliance are found, the CPA must issue a report as illustrated in appendix A, exhibit 4 (Electric), and appendix B, exhibit 4 (Telephone) of this part 1773.

(e) Other nonmaterial instances of noncompliance should not be disclosed in the report on compliance but should be reported in a separate communication to the board of directors, preferably in writing. All such communications must be documented in the workpapers.

(f) If the CPA has issued a separate letter detailing immaterial instances of noncompliance, the report on compliance must be modified to include a statement such as:

> We noted certain immaterial instances of noncompliance that we have reported to the management of (borrower's name) in a separate letter dated March 2, 19X0.

[56 FR 63360, Dec. 3, 1991, as amended at 61 FR 108, Jan. 3, 1996]

§1773.33 Report on internal controls.

As required by GAGAS, the CPA must prepare a written report on the borrower's internal control structure and the assessment of control risk made as part of the financial statement audit. This report must be signed by the CPA and must include, as a minimum:

(a) The scope of the CPA's work to obtain an understanding of the borrower's internal control structure and in assessing the control risk;

(b) A description of the reportable conditions noted which include material weaknesses identified as a result of the CPA's work in understanding and assessing the control risk; and

(c) The status of known but uncorrected, significant or material findings and recommendations from prior audits that affect the current audit objective.

[61 FR 108, Jan. 3, 1996]

§1773.34 Management letter.

The CPA must prepare a management letter that includes, at a minimum, comments on:

(a) *Audit procedures.* State whether the audit has been performed in accordance with this part;

(b) *Special reports.* State whether any special reports, summaries of recommendations, or similar communications were furnished to the borrower's management during the course of the audit or during interim audit work, and provide a description of the information furnished;

(c) *Accounting and records.* Comment on the adequacy and effectiveness of the borrower's accounting procedures, discuss the general condition of the records, and outline any recommendations for improvement. Comment on the adequacy and fairness of the methods used in accumulating and recording labor, material, and overhead costs, and the distribution of these costs to construction, retirement, and maintenance or other expense accounts, and where appropriate, include:

(1) Whether subsidiary plant records agree with the controlling general ledger plant accounts;

(2) Whether construction clearing accounts are cleared promptly of costs of completed construction to the proper classified plant accounts and whether depreciation was accrued on such completed construction from the date the plant was placed in service;

(3) Whether retirements of plant are currently and systematically recorded and properly priced;

(4) Whether all costs associated with retirements of plant are properly accounted for in the accumulated provision for depreciation accounts and comment on any unusual charges or credits to such accounts; and

(5) Whether RUS approval was obtained for a sale requiring such approval, and whether receipts from sales of plant, material or scrap were not handled in conformance with RUS requirements.

(d) *Materials control.* Comment on the adequacy of the control over materials and supplies.

(e) *Compliance with RUS loan and security instrument provisions.* State whether the following provisions of RUS's loan and security instruments have been complied with:

(1) For electric borrowers, provisions relating to:

(i) The requirement for funds to be deposited in banks or other depositories designated in the loan documents or approved by RUS. For purposes of this part 1773, funds shall be defined as cash on deposit in demand and time accounts, and certificates of deposit;

(ii) The requirement for a borrower to obtain written approval of mortgagees to enter into any contract for the operation or maintenance of all or any substantial part of its property, or for the use by others of its property. For purposes of this part 1773, the following contracts shall be deemed as requiring RUS approval:

(A) Management contracts in which the borrower has contracted to have another borrower or other entity manage its affairs;

(B) Management contracts in which the borrower has contracted to manage another borrower or other utility system;

(C) Operations and maintenance contracts in which the borrower has contracted to have another borrower or other entity operate and/or maintain all or a substantial part (45% or more) of the physical plant facilities of the borrower;

(D) Operations and maintenance contracts in which the borrower has contracted to operate and maintain the physical plant facilities of another borrower or other utility system; and

(E) Contracts between the borrower and its manager; and

(iii) The requirement for a borrower to prepare and furnish mortgagees annual financial and statistical reports on the borrower's financial condition and operations. The CPA must state whether the information represented by the borrower as having been submitted to RUS in its most recent December 31 RUS Form 7 or Form 12 is in agreement with the borrower's audited records, and must comment on any exceptions noted. If the borrower represents that an amended report has been filed as of December 31, the comments must relate to the amended report.

(2) For telephone borrowers, provisions relating to:

(i) The requirement for a borrower to obtain written approval of the mortgagees to enter into any contract for the operation or maintenance of property and for the use of mortgaged property

by others, or for services pertaining to toll traffic, operator assistance, or switching. For purposes of this part 1773, the following contracts shall be deemed as requiring RUS approval:

(A) Any contract, agreement or lease between the borrower and an affiliate other than as allowed under 7 CFR part 1744, subpart E;

(B) Any lease of a building or land; and

(C) Any other contract as defined in § 1773.34 (e)(2)(i) except:

(*1*) Industry standard traffic settlement agreements involving interexchange and long distance carriers which, in form and substance, conform with contracts in general use in the telecommunications industry;

(*2*) Billing and collecting agreements;

(*3*) Toll pooling arrangements involving National Exchange Carrier Association and state associations;

(*4*) Directory services agreements; and

(*5*) Joint use agreements;

(ii) The requirement for funds to be deposited in banks or other depositories designated in the loan documents or approved by RUS. For purposes of this part 1773, funds shall be defined as cash on deposit in demand and time accounts, and certificates of deposit; and

(iii) The requirement for a borrower to prepare and furnish mortgagees annual financial and statistical reports on the borrower's financial condition and operations. The CPA must state whether the information represented by the borrower as having been submitted to RUS in its most recent December 31 RUS Form 479 is in agreement with the borrower's audited records, and must comment on any exceptions noted. If the borrower represents that an amended report has been filed as of December 31, the comments must relate to the amended report;

(f) *Related party transactions.* State whether all material related party transactions have been disclosed in the notes to the financial statements in accordance with SFAS No. 57, entitled ''Related Party Disclosures''. If the audit did not disclose any related party transactions considered to be material, either individually or in the aggregate, so state;

(g) *Depreciation rates.* For electric borrowers, comment when the depreciation rates used in computing monthly accruals are not in compliance with RUS requirements (See RUS Bulletin 183–1, Depreciation Rates and Procedures), which require the use of depreciation rates that are within the ranges established by RUS for each primary plant account, or with the requirements of the State regulatory body having jurisdiction over the borrower's depreciation rates; and

(h) *Deferred debits and deferred credits.* For electric borrowers, provide a detailed analysis of the totals reported as deferred debits and deferred credits, including, but not limited to, margin stabilization plans, revenue deferral plans, and expense deferrals. The CPA must state whether RUS has approved, in writing, each regulatory asset and liability.

[56 FR 63360, Dec. 3, 1991, as amended at 59 FR 659, Jan. 6, 1994; 61 FR 108, Jan. 3, 1996]

§§ 1773.35—1773.37 [Reserved]

Subpart E—RUS Required Audit Procedures and Documentation

§ 1773.38 Scope of engagement.

(a) RUS requires that the audit procedures set forth in §§ 1773.39 through 1773.45 be performed annually by the CPA during the audit of the RUS borrowers' financial statements, which audit procedures may be in addition to the conduct of a GAGAS audit.

(b) The CPA must exercise professional judgment in determining whether any auditing procedures in addition to those mandated by GAGAS or this part should be performed in order to afford a reasonable basis for rendering the auditor's report, report on compliance, report on internal controls, and management letter.

§ 1773.39 Utility plant and accumulated depreciation.

(a) *General.* The audit of these accounts must include tests of additions, replacements, retirements, and changes. Based upon the CPA's determination of materiality, an appropriate sample of transactions must be selected for testing. The CPA's

workpapers must document that he/she:

(1) Examined direct labor and material transactions to determine whether the borrower's accounting records reflect a complete accumulation of costs;

(2) Examined indirect costs and overhead charges to determine if they conform to the Uniform System of Accounts;

(3) Reviewed the costs of completed construction and retirement projects to determine if they were cleared promptly from the work in progress accounts to the classified plant in service accounts and the related depreciation reserves;

(4) Examined direct purchases of special equipment and general plant;

(5) Determined the degree of accuracy and control of costing retirements, including tests of salvage and removal costs;

(6) Reviewed the borrower's work order procedures; and

(7) Reviewed depreciation rates for adequate support, compared them to RUS guidelines, and determined if they are in compliance.

(b) *Construction work in progress.* (1) The workpapers must include a summary of open work orders reconciled to the general ledger. The CPA must note on the summary any unusual or nontypical projects.

(2) Based upon the CPA's determination of materiality, an appropriate sample of work orders must be selected for testing. The CPA's workpapers must document that he/she:

(i) Reviewed equipment purchases charged to work orders, including payments and receiving reports;

(ii) Reviewed contracts showing the scope of the work, the nature of the contract, the contract amount, and scheduled payments and reviewed supporting documents to determine that all services contracted for were in fact rendered;

(iii) Reviewed time cards and pay rates for several employees who allocate their time to work orders;

(iv) Reviewed the nature of material and supplies issued to the project, traced amounts and quantities to supporting documents, and reviewed the reasonableness of clearing rates for assignment of stores expense to the work order;

(v) Reviewed the accuracy of the computation of overheads applied to the work order; and

(vi) Reviewed other costs charged to the work order for support and propriety.

(3) Based upon the CPA's determination of materiality, an appropriate sample of completed contracts must be selected for testing. The CPA's workpapers must document that he/she:

(i) Scheduled payments to contractors and traced to verify payments and supporting invoices;

(ii) Traced contract costs to final closeout documents, to the general ledger, and to the continuing property records; and

(iii) Verified the costs of owner furnished materials, if applicable.

(4) The CPA must review the borrower's procedures for unitization and classification of work order and contract costs. Based upon the CPA's determination of materiality, an appropriate sample of transactions must be selected for testing. The CPA's workpapers must document that he/she:

(i) Reviewed the tabulation of record units for construction from the work order staking sheets to the tabulation of record units, to the unitization sheets, and to the continuing property records;

(ii) Reviewed the procedures for unitizing and distributing costs of completed construction to the plant accounts;

(iii) Verified that standard costs were being used;

(iv) Evaluated the basis for development of standard costs; and

(v) Determined that costs of completed construction were cleared promptly from work in progress accounts.

(c) *Continuing property records.* Based upon the CPA's determination of materiality, an appropriate sample of transactions must be selected for testing. The CPA's workpapers must document that he/she:

(1) Determined whether the subsidiary plant records agree with the controlling general ledger plant accounts;

(2) Noted differences in the workpapers; and

(3) Commented, in the management letter, on any discrepancies.

(d) *Retirement work-in-progress.* Based upon the CPA's determination of materiality, an appropriate sample of transactions must be selected for testing. The CPA's workpapers must document that he/she:

(1) Determined that plant retirements are currently and systematically recorded and priced on the basis of the continuing property records, and determined that costs of removal have been properly accounted for;

(2) Explained the method used in computing the cost of units of plant retired if continuing property records have not been established and determined whether costs appeared reasonable; and

(3) Determined the manner in which net losses due to retirements were accounted for and traced clearing entries to the depreciation reserve, the plant accounts, and the continuing property records.

(e) *Provision for accumulated depreciation.* The CPA's workpapers must include an analysis of transactions. Based upon the CPA's determination of materiality, an appropriate sample of transactions must be selected for testing. The CPA's workpapers must document that he/she:

(1) Verified the depreciation accruals for the period, including the depreciation base;

(2) Reviewed the basis of the depreciation rates, any change in rates and the reason therefor, and, if appropriate, determined whether the rates are in compliance with RUS requirements or with the requirements of the state regulatory body having jurisdiction over the borrower's depreciation rates;

(3) Reviewed salvage and removal costs; and

(4) Searched for unrecorded retirements.

(f) *Other reserves.* The CPA's workpapers must include an account analysis for all other material plant reserves, such as the reserve for the amortization of plant acquisition adjustments. Based upon the CPA's determination of materiality, an appropriate sample of transactions must be selected for testing. The CPA's workpapers must document that appropriate tests of transactions were performed.

(g) *Narrative.* The CPA must prepare and include in the workpapers a comprehensive narrative on the scope of work performed, observations made, and conclusions reached. Specific matters covered in this narrative must include:

(1) The nature of construction and other additions;

(2) The control over, and the accuracy of pricing retirements;

(3) The accuracy of distributing costs to classified utility plant accounts;

(4) An evaluation of the method of:

(i) Capitalizing the direct loadings on labor and material costs;

(ii) Distributing transportation costs and other expense clearing accounts; and

(iii) Capitalizing overhead costs;

(5) The tests of depreciation;

(6) A review of agreements such as those relating to acquisitions, property sales, and leases which affect the plant accounts; and

(7) Notations, if applicable, of RUS approval of property sales and the propriety of the disposition of the proceeds.

§ 1773.40 Regulatory assets.

The CPA's workpapers must document whether all regulatory assets comply with the requirements of SFAS No. 71. For electric borrowers only, the CPA's workpapers must document whether all regulatory assets have received RUS approval.

[59 FR 660, Jan. 6, 1994]

§ 1773.41 Extraordinary retirement losses.

The CPA's workpapers must contain an analysis of retirement losses, including any required approval by a regulatory commission with jurisdiction in the matter, or RUS, in the absence of commission jurisdiction.

§ 1773.42 Clearing accounts.

The CPA's workpapers must contain an analysis of all clearing accounts. Based upon the CPA's determination of materiality, an appropriate sample of transactions should be selected for

testing. The CPA's workpapers must document that transactions were reviewed for proper allocation between expense and capital accounts.

§ 1773.43 Capital and equity accounts.

(a) *Capital stock.* For privately owned companies, the workpapers must include analyses of all stock transactions during the audit period. Based upon the CPA's determination of materiality, an appropriate sample of transactions must be selected for testing. The CPA's workpapers must document that he/she:

(1) Reviewed the subsidiary records and reconciled them to the general ledger control account;

(2) Reviewed authorizations and issuances or redemptions of capital stock for proper approvals by the board of directors, stockholders, and regulatory commissions;

(3) Determined that transactions were made in accordance with the appropriate provisions of the articles of incorporation, bylaws, and RUS loan documents; and

(4) Determined that transactions were recorded in accordance with the Uniform System of Accounts.

(b) *Memberships.* For cooperative organizations, the workpapers must include an analysis of the membership transactions during the audit period. Based upon the CPA's determination of materiality, an appropriate sample of transactions must be selected for testing. The CPA's workpapers must document that he/she:

(1) Reviewed the subsidiary records and reconciled them to the general ledger control account; and

(2) Determined that transactions were made in accordance with the appropriate provisions of the articles of incorporation, bylaws, and RUS loan documents.

(c) *Patronage capital, retained earnings, margins, and other equities.* The workpapers must include an analysis of the patronage capital, retained earnings, margins and other equities, and any related reserve accounts. Based upon the CPA's determination of materiality, an appropriate sample of transactions must be selected for testing. The CPA's workpapers must document that he/she:

(1) Determined that the transactions were made in accordance with the appropriate provisions of the articles of incorporation, bylaws, RUS loan documents, Uniform System of Accounts, or orders of regulatory commissions;

(2) Traced payments to underlying support; and

(3) Determined whether, under the terms of the RUS security instrument, restrictions of retained earnings or margins are required and, if so, whether they have been properly recorded.

§ 1773.44 Long-term debt.

The CPA's workpapers must document that he/she:

(a) Confirmed RUS, FFB, and RTB debt to the appropriate confirmation schedule (RUS Form 690, Confirmation Schedule Obligation to the FFB as of: or Form 691, Confirmation Schedule—Long-term Obligation to RUS as of; or RTB Form 12, Confirmation Schedule);

(b) Confirmed other long-term debt directly with the lender;

(c) Examined notes executed or canceled during the audit period; and

(d) Tested accrued interest computations.

§ 1773.45 Regulatory liabilities.

The CPA's workpapers must document whether all regulatory liabilities comply with the requirements of SFAS No. 71. For electric borrowers only, the CPA's workpapers must document whether all regulatory liabilities have received RUS approval.

[59 FR 660, Jan. 6, 1994]

§§ 1773.46—1773.49 [Reserved]

APPENDIX A TO PART 1773—SAMPLE AUDITOR'S REPORT FOR AN ELECTRIC COOPERATIVE

Appendix A includes an example of an auditor's report, report on compliance, report on internal controls, financial statements and accompanying notes for an electric distribution cooperative. The sample auditor's report is intended as a guide only and, while it is recommended that the format be followed, each auditor's report should be prepared to adequately cover the circumstances. To the extent possible, it should be used as a guide in preparing auditors' reports for other types of electric borrowers.

For power supply borrowers and for distribution borrowers with production or transmission plant, the same general format should be followed. However, the Statement of Revenue and Patronage Capital must be expanded to show separate totals for operations expenses and maintenance expenses for each class of production plant and for transmission plant.

Exhibit 1—Sample Auditor's Report

Certified Public Accountants, 1600 Main Street, City, State 24105, The Board of Directors, Center County Electric Cooperative:

INDEPENDENT AUDITOR'S REPORT

We have audited the accompanying balance sheets of Center County Electric Cooperative as of December 31, 19X9 and 19X8, and the related statements of revenue and patronage capital, and cash flows for the years then ended. These financial statements are the responsibility of Center County Electric Cooperative's management. Our responsibility is to express an opinion on these financial statements based on our audit.

We conducted our audits in accordance with generally accepted auditing standards and Government Auditing Standards issued by the Comptroller General of the United States. Those standards require that we plan and perform the audit to obtain reasonable assurance about whether the financial statements are free of material misstatement. An audit includes examining, on a test basis, evidence supporting the amounts and disclosures in the financial statements. An audit also includes assessing the accounting principles used and significant estimates made by management, as well as evaluating the overall financial statement presentation. We believe that our audits provide a reasonable basis for our opinion.

In our opinion, the financial statements referred to above present fairly, in all material respects, the financial position of Center County Electric Cooperative as of December 31, 19X9 and 19X8, and the results of its operations and its cash flows for the years then ended in conformity with generally accepted accounting principles.

In accordance with Government Auditing Standards, we have also issued a report dated March 2, 19X0, on our consideration of Center County Electric Cooperative's internal control structure and a report dated March 2, 19X0, on its compliance with laws and regulations.

CERTIFIED PUBLIC ACCOUNTANTS

March 2, 19X0

Exhibit 2—Sample Report on Compliance When, Based on Assessments of Materiality and Audit Risk, the CPA Concluded It Was Not Necessary to Perform Tests of Compliance With Laws and Regulations

Certified Public Accountants, 1600 Main Street, City, State 24105, The Board of Directors, Center County Electric Cooperative:

We have audited the financial statements of Center County Electric Cooperative as of and for the years ended December 31, 19X9 and 19X8, and have issued our report thereon dated March 2, 19X0.

We conducted our audits in accordance with generally accepted auditing standards and the Government Auditing Standards, issued by the Comptroller General of the United States. Those standards require that we plan and perform the audit to obtain reasonable assurance about whether the financial statements are free of material misstatement.

Compliance with laws, regulations, contracts, and grants applicable to Center County Electric Cooperative is the responsibility of Center County Electric Cooperative's management. As part of our audit, we assessed the risk that noncompliance with certain provisions of laws, regulations, contracts, and grants could cause the financial statements to be materially misstated. We concluded that the risk of such material misstatement was sufficiently low that it was not necessary to perform tests of Center County Electric Cooperative's compliance with such provisions of laws, regulations, contracts, and grants.

This report is intended for the information of the audit committee, management, the Rural Utilities Service, and supplemental lenders. However, this report is a matter of public record and its distribution is not limited.

CERTIFIED PUBLIC ACCOUNTANTS

March 2, 19X0

Exhibit 3—Sample Report on Compliance When, Based on Assessments of Materiality and Audit Risk, the CPA Performed Compliance Testing and Found No Reportable Instances of Noncompliance

Certified Public Accountants, 1600 Main Street, City, State 24105, The Board of Directors, Center County Electric Cooperative:

We have audited the financial statements of Center County Electric Cooperative as of and for the years ended December 31, 19X9 and 19X8, and have issued our report thereon dated March 2, 19X0.

We conducted our audits in accordance with generally accepted auditing standards and Government Auditing Standards, issued by the Comptroller General of the United

States. Those standards require that we plan and perform the audit to obtain reasonable assurance about whether the financial statements are free of material misstatement.

Compliance with laws, regulations, contracts, and grants applicable to Center County Electric Cooperative is the responsibility of Center County Electric Cooperative's management. As part of obtaining reasonable assurance about whether the financial statements are free of material misstatement, we performed tests of Center County Electric Cooperative's compliance with certain provisions of laws, regulations, contracts, and grants. However, the objective of our audit of the financial statements was not to provide an opinion on overall compliance with such provisions. Accordingly, we do not express such an opinion.

The results of our tests disclosed no instances of noncompliance that are required to be reported herein under Government Auditing Standards.

This report is intended for the information of the audit committee, management, the Rural Utilities Service, and supplemental lenders. However, this report is a matter of public record and its distribution is not limited.

CERTIFIED PUBLIC ACCOUNTANTS

March 2, 19X0

Exhibit 4—Sample Report on Compliance When, Based on Assessments of Materiality and Audit Risk, the CPA Performed Compliance Testing and Found Reportable Instances of Noncompliance

Certified Public Accountants, 1600 Main Street, City, State 24105, The Board of Directors, Center County Electric Cooperative:

We have audited the financial statements of Center County Electric Cooperative as of and for the years ended December 31, 19X9 and 19X8, and have issued our report thereon dated March 2, 19X0.

We conducted our audits in accordance with generally accepted auditing standards and Government Auditing Standards, issued by the Comptroller General of the United States. Those standards require that we plan and perform the audit to obtain reasonable assurance about whether the financial statements are free of material misstatement.

Compliance with laws, regulations, contracts, and grants applicable to Center County Electric Cooperative is the responsibility of Center County Electric Cooperative's management. As part of obtaining reasonable assurance about whether the financial statements are free of material misstatement, we preformed tests of Center County Electric Cooperative's compliance with certain provisions of laws, regulations, contracts, and grants. However, the objective of our audit of the financial statements was not to provide an opinion on overall compliance with such provisions. Accordingly, we do not express such an opinion.

The results of our tests disclosed instances of noncompliance that are required to be reported herein under Government Auditing Standards for which the ultimate resolution cannot presently be determined. Accordingly, no provision for any liability that may result has been recognized in Center County Electric Cooperative's 19X9 and 19X8 financial statements.

[Include paragraphs describing the instances of noncompliance noted.]

We considered these instances of noncompliance in forming our opinion on whether Center County Electric Cooperative's 19X9 and 19X8 financial statements are presented fairly, in all material respects, in conformity with generally accepted accounting principles, and this report does not effect our report dated March 2, 19X0, on those financial statements.

This report is intended for the information of the audit committee, management, the Rural Utilities Service, and supplemental lenders. However, this report is a matter of public record and its distribution is not limited.

Certified Public Accountants

March 2, 19X0

Exhibit 5—Sample Report on Internal Controls When Reportable Conditions Were Found

Certified Public Accountants, 1600 Main Street, City, State 24105, The Board of Directors, Center County Electric Cooperative:

We have audited the financial statements of Center County Electric Cooperative as of and for the years ended December 31, 19X9 and 19X8, and have issued our report thereon dated March 2, 19X0.

We conducted our audits in accordance with generally accepted auditing standards and Government Auditing Standards, issued by the Comptroller General of the United States. Those standards require that we plan and perform the audit to obtain reasonable assurance about whether the financial statements are free of material misstatement.

The management of Center County Electric Cooperative is responsible for establishing and maintaining an internal control structure. In fulfilling this responsibility, estimates and judgements by management are required to assess the expected benefits and related costs of internal control structure policies and procedures. The objectives of an internal control structure are to provide management with reasonable, but not absolute, assurance that the assets are safeguarded against loss from unauthorized use or disposition, and that transactions are executed in accordance with management's authorization and recorded properly to permit

the preparation of financial statements in accordance with generally accepted accounting principles. Because of inherent limitations in any internal control structure, errors or irregularities may nevertheless occur and not be detected. Also, projection of any evaluation of the structure to future periods is subject to the risk that procedures may become inadequate because of changes in conditions or that the effectiveness of the design and operation of policies and procedures may deteriorate.

In planning and performing our audit of the financial statements of Center County Electric Cooperative for the years ended December 31, 19X9 and 19X8, we obtained an understanding of the internal control structure. With respect to the internal control structure, we obtained an understanding of the design of relevant policies and procedures and whether they have been placed in operation, and we assessed control risk in order to determine our auditing procedures for the purpose of expressing our opinion on the financial statements and not to provide an opinion on the internal control structure. Accordingly, we do not express such an opinion.

We noted certain matters involving the internal control structure and its operation that we consider to be reportable conditions under standards established by the American Institute of Certified Public Accountants. Reportable conditions involve matters coming to our attention relating to significant deficiencies in the design or operation of the internal control structure that, in our judgement, could adversely affect the entity's ability to record, process, summarize, and report financial data consistent with the assertions of management in the financial statements.

[Include paragraphs to describe the reportable conditions noted.]

A material weakness is a reportable condition in which the design or operation of one or more of the specific internal control structure elements does not reduce to a relatively low level the risk that errors or irregularities in amounts that would be material in relation to the financial statements being audited may occur and not be detected within a timely period by employees in the normal course of performing their assigned functions.

Our consideration of the internal control structure would not necessarily disclose all matters in the internal control structure that might be reportable conditions and, accordingly, would not necessarily disclose all reportable conditions that are also considered to be material weaknesses as defined above. However, we believe none of the reportable conditions described above is a material weakness.

We also noted other matters involving the internal control structure and its operation that we have reported to the management of Center County Electric Cooperative in a separate letter dated March 2, 19X0.

This report is intended for the information of the audit committee, management, the Rural Utilities Service, and supplemental lenders. However, this report is a matter of public record, and its distribution is not limited.

Certified Public Accountants

March 2, 19X0

Exhibit 6—Sample Report on Internal Controls When No Reportable Conditions Were Found

Certified Public Accountants, 1600 Main Street, City, State 24105, The Board of Directors, Center County Electric Cooperative:

We have audited the financial statements of Center County Electric Cooperative, as of and for the years ended December 31, 19X9 and 19X8, and have issued our report thereon dated March 2, 19X0.

We conducted our audits in accordance with generally accepted auditing standards and Government Auditing Standards, issued by the Comptroller General of the United States. Those standards require that we plan and perform the audit to obtain reasonable assurance about whether the financial statements are free of material misstatement.

The management of Center County Electric Cooperative is responsible for establishing and maintaining an internal control structure. In fulfilling this responsibility, estimates and judgements by management are required to assess the expected benefits and related costs of internal control structure policies and procedures. The objectives of an internal control structure are to provide management with reasonable, but not absolute, assurance that assets are safeguarded against loss from unauthorized use or disposition, and that transactions are executed in accordance with management's authorization and recorded properly to permit the preparation of financial statements in accordance with generally accepted accounting principles. Because of inherent limitations in any internal control structure, errors or irregularities may nevertheless occur and not be detected. Also, projection of any evaluation of the structure to future periods is subject to the risk that procedures may become inadequate because of changes in conditions or that the effectiveness of the design and operation of policies and procedures may deteriorate.

In planning and performing our audit of the financial statements of Center County Electric Cooperative for the years ended December 31, 19X9 and 19X8, we obtained an understanding of the internal control structure. With respect to the internal control

structure, we obtained an understanding of the design of relevant policies and procedures and whether they have been placed in operation, and we assessed control risk in order to determine our auditing procedures for the purpose of expressing our opinion on the financial statements and not to provide an opinion on the internal control structure. Accordingly, we do not express such an opinion.

Our consideration of the internal control structure would not necessarily disclose all matters in the internal control structure that might be material weaknesses under standards established by the American Institute of Certified Public Accountants. A material weakness is a condition in which the design or operation of one or more of the specific internal control structure elements does not reduce to a relatively low level the risk that errors or irregularities in amounts that would be material in relation to the financial statements being audited may occur and not be detected within a timely period by employees in the normal course of performing their assigned functions. We noted no matters involving the internal control structure and its operations that we consider to be material weaknesses as defined above.

However, we noted other matters involving the internal control structure and its operation that we have reported to the management of Center County Electric Cooperative in a separate letter dated March 2, 19X0.

This report is intended for the information of the audit committee, management, the Rural Utilities Service, and supplemental lenders. However, this report is a matter of public record, and its distribution is not limited.

Certified Public Accountants

March 2, 19X0

EXHIBIT 7 - SAMPLE FINANCIAL STATEMENTS

CENTER COUNTY ELECTRIC COOPERATIVE
BALANCE SHEETS - DECEMBER 31, 19X9 AND 19X8
ASSETS (Notes 1 and 2)

	19X9	19X8
ELECTRIC PLANT: (Note 3)		
In Service - at cost	$9,524,646	$9,365,264
Construction Work in Progress	407,943	317,166
	9,932,589	9,682,430
Less: Accumulated Provisions for Depreciation	3,117,629	2,917,295
	6,814,960	6,765,135
OTHER ASSETS AND INVESTMENTS:		
Nonutility Property	20,227	20,227
Investments in Associated Organizations (Note 4)	391,258	292,798
	411,485	313,025
CURRENT ASSETS:		
Cash - General Funds	37,350	51,544
Cash - Construction Funds	10,034	20,193
Accounts Receivable (Less accumulated provision for uncollectible accounts of $2,207 in 19X9 and $1,933 in 19X8)	36,527	35,255
Materials and Supplies (at average cost)	83,652	80,882
Other Current and Accrued Assets	8,613	8,692
	176,176	196,566
DEFERRED CHARGES (Note 5):	5,666	1,762
	$7,408,287	$7,276,488

The accompanying notes are an integral part of these statements.

CENTER COUNTY ELECTRIC COOPERATIVE
BALANCE SHEETS - DECEMBER 31, 19X9 and 19X8
EQUITIES AND LIABILITIES (Note 1)

	19X9	19X8
EQUITIES:		
Memberships	$ 60,145	$ 59,440
Patronage Capital (Note 6)	1,761,798	1,526,833
Other Equities (Note 7)	53,647	35,900
	1,875,590	1,622,173
LONG-TERM DEBT:		
REA Mortgage Notes less current maturities (Note 8)	5,249,115	5,396,385
CURRENT LIABILITIES:		
Current Maturities of Long-Term Debt	145,000	140,000
Accounts Payable - Purchased Power	48,916	52,117
Accounts Payable - Other	21,859	6,556
Consumer Deposits	32,660	33,085
Accrued Taxes	10,958	9,146
Other Current and Accrued Liabilities	12,285	6,461
	271,678	247,365
DEFERRED CREDITS (Note 10):	11,904	10,565
	$7,408,287	$7,276,488

The accompanying notes are an integral part of these statements.

CENTER COUNTY ELECTRIC COOPERATIVE
STATEMENTS OF REVENUE AND PATRONAGE CAPITAL
FOR THE YEARS ENDED DECEMBER 31, 19X9 and 19X8

	19X9	19X8
OPERATING REVENUES:	$1,719,467	$1,605,690
OPERATING EXPENSES:		
Cost of Power	587,729	625,411
Distribution - Operation	111,058	121,682
Distribution - Maintenance	158,622	182,740
Consumer Accounts	76,675	72,927
Sales	38,378	40,755
Administrative and General	94,682	87,058
Depreciation and Amortization	288,389	279,776
Taxes	34,920	34,438
	1,390,453	1,444,787
OPERATING MARGINS BEFORE FIXED CHARGES	329,014	160,903
FIXED CHARGES:		
Interest on Long-Term Debt	113,713	115,082
OPERATING MARGINS AFTER FIXED CHARGES	215,301	45,821
G&T AND OTHER CAPITAL CREDITS	14,460	17,500
NET OPERATING MARGINS	229,761	63,321
NONOPERATING MARGINS:		
Interest Income	24,289	18,802
Other Nonoperating Income	1,200	1,200
	25,489	20,002
NET MARGINS	255,250	83,323
PATRONAGE CAPITAL - BEGINNING OF YEAR	1,526,833	1,469,125
	1,782,083	1,552,448
RETIREMENT OF CAPITAL CREDITS	20,285	25,615
PATRONAGE CAPITAL - END OF YEAR	$1,761,798	$1,526,833

The accompanying notes are an integral part of these statements.

CENTER COUNTY ELECTRIC COOPERATIVE
STATEMENTS OF CASH FLOWS
FOR THE YEARS ENDED DECEMBER 31, 19X9 AND 19X8

	19X9	19X8
CASH FLOWS FROM OPERATING ACTIVITIES:		
Cash Received from Consumers	$1,721,496	$1,609,933
Cash Paid to Suppliers and Employees	(1,049,139)	(1,126,367)
Interest Received	24,289	18,802
Interest Paid	(114,131)	(115,607)
Taxes Paid	(33,108)	(32,132)
Net Cash Provided by Operating Activities	549,407	354,629
CASH FLOWS FROM INVESTING ACTIVITIES:		
Construction and Acquisition of Plant	(322,234)	(216,427)
Plant Removal Costs	(25,994)	(19,268)
Materials Salvaged from Retirements	10,014	7,327
(Increase)/Decrease In:		
Materials Inventory	(2,770)	1,916
Deferred Charges-Preliminary Survey & Investigation	(3,486)	(2,617)
Investments-CFC Capital Term Certificates	(82,472)	(69,412)
Inventory Adjustment-Deferred Credit Decrease	(2,290)	(1,057)
Net Cash Used in Investing Activities	(429,232)	(299,538)
CASH FLOWS FROM FINANCING ACTIVITIES:		
Retirements of Patronage Capital Credits	(20,285)	(25,615)
Retired Capital Credits - Gain	1,200	1,200
Donated Capital	16,547	6,178
REA Loan Advances	174,976	197,450
Payments on REA Debt	(317,246)	(279,575)
Increase/(Decrease) In:		
Consumer Deposits	(425)	575
Memberships Issued	705	450
Net Cash Used in Financing Activities	(144,528)	(99,337)
Net Increase/(Decrease) in Cash	(24,353)	(44,246)
Cash - Beginning of Year	71,737	115,983
Cash - End of Year	$ 47,384	$ 71,737

The accompanying notes are an integral part of these statements.

CENTER COUNTY ELECTRIC COOPERATIVE
STATEMENTS OF CASH FLOWS
FOR THE YEARS ENDED DECEMBER 31, 19X9 AND 19X8

RECONCILIATION OF NET MARGINS TO NET CASH PROVIDED BY OPERATING ACTIVITIES:

	19X9	19X8
Net Margins	$ 255,250	$ 83,323
Adjustments to Reconcile Net Margins to Net Cash Provided by Operating Activities:		
Depreciation and Amortization	288,389	279,776
G&T and Other Capital Credits (Non-Cash)	(14,460)	(17,500)
Patronage Capital Credits-NRUCFC (Non-Cash)	(1,528)	(1,200)
Provision for Uncollectible Accounts Receivable	274	(526)
(Increase)/Decrease In:		
Customer and Other Accounts Receivable	(1,546)	2,523
Current and Accrued Assets-Other	79	112
Increase/(Decrease) In:		
Accounts Payable	12,102	5,117
Accrued Taxes	1,812	2,306
Deferred Energy Prepayments	3,629	2,246
Current and Accrued Liabilities-Other	5,824	(1,023)
Deferred Interest Expense	(418)	(525)
Total Adjustments	294,157	271,306
Net Cash Provided by Operating Activities	$ 549,407	$ 354,629

The accompanying notes are an integral part of these statements.

CENTER COUNTY ELECTRIC COOPERATIVE
NOTES TO FINANCIAL STATEMENTS
DECEMBER 31, 19X9 AND DECEMBER 31, 19X8

1. SUMMARY OF SIGNIFICANT ACCOUNTING POLICIES:

Include a brief description of the reporting entity's significant accounting policies in accordance with Accounting Principles Board Opinion No. 22, Disclosure of Accounting Policies.

Disclosure of accounting policies should identify and describe the accounting principles followed by the borrower and the methods of applying those principles that materially affect the determination of financial position, cash flow, and results of operations.

Disclosures of accounting policies do not have to be duplicated in this section if presented elsewhere as an integral part of the financial statements.

2. ASSETS PLEDGED:

Substantially all assets are pledged as security for long-term debt to REA.

3. ELECTRIC PLANT AND DEPRECIATION RATES AND PROCEDURES:

Listed below are the major classes of the electric plant as of December 31, 19X9, and 19X8:

	19X9	19X8
Intangible Plant	$ 2,194	$ 2,194
Distribution Plant	9,011,036	8,873,957
General Plant	511,416	489,113
Electric Plant in Service	9,524,646	9,365,264
Construction Work in Progress	407,943	317,166
	$9,932,589	$9,682,430

Provision has been made for depreciation of distribution plant at a straight-line composite rate of 2.86 percent per annum.

General Plant depreciation rates have been applied on a straight-line basis as follows:

Structures and Improvement	2.5%
Office Furniture	6.0%
Transportation Equipment	14.0%
Power Operated Equipment	12.0%
Other General Plant	4.0%
Communications Equipment	6.0%

4. INVESTMENTS IN ASSOCIATED ORGANIZATIONS:

Investments in associated organizations consisted of the following at December 31, 19X9 and 19X8:

	19X9	19X8
Capital Term Certificates of the National Rural Utilities Cooperative Finance Corporation (NRUCFC)	$ 385,193	$ 288,261
NRUCFC Patronage Capital Credits	5,065	3,537
Other	1,000	1,000
	$ 391,258	$ 292,798

5. DEFERRED CHARGES:

Following is a summary of amounts recorded as deferred charges as of December 31, 19X9 and 19X8:

	19X9	19X8
Preliminary Surveys 19X0 - X1 Work Plan	$ 5,666	$ 1,762

6. PATRONAGE CAPITAL:

At December 31, 19X9 and 19X8, patronage capital consisted of:

	19X9	19X8
Assignable	$ 255,250	$ 83,323
Assigned to Date	1,952,448	1,869,125
	2,207,698	1,952,448
Less: Retirements to Date	445,900	425,615
	$1,761,798	$1,526,833

Under the provisions of the Mortgage Agreement, until the equities and margins equal or exceed forty percent of the total assets of the cooperative, the return to patrons of contributed capital is generally limited to twenty-five percent of the patronage capital or margins received by the cooperative in the prior calendar year. The equities and margins of the cooperative represent 25.3 percent of the total assets at balance sheet date. Capital credit retirements in the amount of $20,285 were paid in 19X9.

7. OTHER EQUITIES:

At December 31, 19X9 and 19X8, other equities consisted of:

	19X9	19X8
Retired Capital Credits - Gain	$ 36,190	$ 34,990
Donated Capital	17,457	910
	$ 53,647	$ 35,900

8. MORTGAGE NOTES - REA:

Long-term debt is represented by mortgage notes payable to the United States of America. Following is a summary of outstanding long-term debt as of December 31, 19X9 and 19X8:

	19X9	19X8
2% Notes due March 31, 19X5	$1,057,155	$1,098,700
2% Notes due December 31, 19X6	2,485,927	2,502,370
5% Notes due December 31, 19X6	1,851,033	1,935,315
Less: Current Maturities	(145,000)	(140,000)
	$5,249,115	$5,396,385

Unadvanced loan funds of $285,600 are available to the cooperative on loan commitments from REA.

Principal and interest installments on the above notes are due quarterly in equal amounts of $99,600. As of December 31, 19X9, annual maturities of long-term debt outstanding for the next five years are as follows:

19X0	$145,000
19X1	$150,000
19X2	$151,500
19X3	$154,000
19X4	$155,000

Advance payments of $252,300 may be applied to the installments.

9. PENSION PLAN:

Substantially all of the employees of the Cooperative are covered by the ABC Retirement and Security Program, a multiemployer plan. Pension expense for the years ended 19X9 and 19X8 was $22,400.00 and $20,400.00, respectively.

10. DEFERRED CREDITS:

Following is a summary of the amounts recorded as deferred credits as of December 31, 19X9 and 19X8:

	19X9	19X8
Customer Energy Payments	$ 6,694	$ 3,065
Inventory Adjustment	5,210	7,500
	$ 11,904	$ 10,565

11. LITIGATION:

The cooperative is a defendant in an action in which the plaintiff claims damages totaling $200,000 for personal injuries sustained. The action has been dismissed by the District Court, but is on appeal before the State Supreme Court. Management is of the opinion that no liability will be incurred by the cooperative as a result of this action.

12. COMMITMENTS:

Under its wholesale power agreement, the cooperative is committed to purchase its electric power and energy requirements from Central Power Cooperative, Inc., until December 31, 19XX. The rates paid for such purchases are subject to review annually.

[56 FR 63360, Dec. 3, 1991, as amended at 61 FR 109, Jan. 3, 1996]

APPENDIX B TO PART 1773—SAMPLE AUDITOR'S REPORT FOR A CLASS A OR B COMMERCIAL TELEPHONE COMPANY

Appendix B includes an example of a short-form auditor's report, report on compliance, report on internal controls, financial statements and accompanying notes for a commercial telephone company. The sample auditor's report is intended as a guide only and, while it is recommended that the format be followed, each auditor's report should be prepared to adequately cover the circumstances. To the extent possible, it should be used as a guide in preparing auditors' reports for other types of telephone borrowers.

Exhibit 1—Sample Auditor's Report

Certified Public Accountants, 1600 Main Street, City, State 24105, The Board of Directors, Center Telephone Company:

INDEPENDENT AUDITOR'S REPORT

We have audited the accompanying balance sheets of Center Telephone Company as of December 31, 19X9 and 19X8, and the related statements of revenue and patronage capital, and cash flows for the years then ended. These financial statements are the responsibility of Center Telephone Company's management. Our responsibility is to express an opinion on these financial statements based on our audit.

We conducted our audits in accordance with generally accepted auditing standards and Government Auditing Standards issued by the Comptroller General of the United States. Those standards require that we plan and perform the audit to obtain reasonable assurance about whether the financial statements are free of material misstatement. An audit includes examining, on a test basis, evidence supporting the amounts and disclosures in the financial statements. An audit also includes assessing the accounting principles used and significant estimates made by management, as well as evaluating the overall financial statement presentation. We believe that our audits provide a reasonable basis for our opinion.

In our opinion, the financial statements referred to above present fairly, in all material respects, the financial position of Center Telephone Company as of December 31, 19X9 and 19X8, and the results of its operations and its cash flows for the years then ended in conformity with generally accepted accounting principles.

In accordance with Government Auditing Standards, we have also issued a report dated March 2, 19X0, on our consideration of Center Telephone Company's internal control structure and a report dated March 2, 19X0, on its compliance with laws and regulations.

Certified Public Accountants

March 2, 19X0

Exhibit 2—Sample Report on Compliance When, Based on Assessments of Materiality and Audit Risk, the CPA Concluded It Was Not Necessary to Perform Tests of Compliance With Laws and Regulations

Certified Public Accountants, 1600 Main Street, City, State 24105, The Board of Directors, Center Telephone Company

We have audited the financial statements of Center Telephone Company as of and for the years ended December 31, 19X9 and 19X8, and have issued our report thereon dated March 2, 19X0.

We conducted our audits in accordance with generally accepted auditing standards and the Government Auditing Standards, issued by the Comptroller General of the United States. Those standards require that we plan and perform the audit to obtain reasonable assurance about whether the financial statements are free of material misstatement.

Compliance with laws, regulations, contracts, and grants applicable to Center Telephone Company is the responsibility of Center Telephone Company's management. As part of our audit, we assessed the risk that noncompliance with certain provisions of laws, regulations, contracts, and grants could cause the financial statements to be materially misstated. We concluded that the risk of such material misstatement was sufficiently low that it was not necessary to perform tests of Center Telephone Company's compliance with such provisions of laws, regulations, contracts, and grants.

This report is intended for the information of the audit committee, management, the Rural Utilities Service, and supplemental lenders. However, this report is a matter of public record and its distribution is not limited.

Certified Public Accountants

March 2, 19X0

Exhibit 3—Sample Report on Compliance When, Based on Assessments of Materiality and Audit Risk, the CPA Performed Compliance Testing and Found No Reportable Instances of Noncompliance

Certified Public Accountants, 1600 Main Street, City, State 24105, The Board of Directors, Center Telephone Company:

We have audited the financial statements of Center Telephone Company as of and for

the years ended December 31, 19X9 and 19X8, and have issued our report dated March 2, 19X0.

We conducted our audits in accordance with generally accepted auditing standards and Government Auditing Standards, issued by the Comptroller General of the United States. Those standards require that we plan and perform the audit to obtain reasonable assurance about whether the financial statements are free of material misstatement.

Compliance with laws, regulations, contracts, and grants applicable to Center Telephone Company is the responsibility of Center Telephone Company's management. As part of obtaining reasonable assurance about whether the financial statements are free of material misstatement, we performed tests of Center Telephone Company's compliance with certain provisions of laws, regulations, contracts, and grants. However, the objective of our audit of the financial statements was not to provide an opinion on overall compliance with such provisions. Accordingly, we do not express such an opinion.

The results of our tests disclosed no instances of noncompliance that are required to be reported herein under Government Auditing Standards.

This report is intended for the information of the audit committee, management, the Rural Utilities Service, and supplemental lenders. However, this report is a matter of public record and its distribution is not limited.

Certified Public Accountants

March 2, 19X0

Exhibit 4—Sample Report on Compliance When, Based on Assessments of Materiality and Audit Risk, the CPA Performed Compliance Testing and Found Reportable Instances of Noncompliance

Certified Public Accountants, 1600 Main Street, City, State 24105, The Board of Directors, Center Telephone Company:

We have audited the financial statements of Center Telephone Company as of and for the years ended December 31, 19X9 and 19X8, and have issued our report thereon dated March 2, 19X0.

We conducted our audits in accordance with generally accepted auditing standards and Government Auditing Standards, issued by the Comptroller General of the United States. Those standards require that we plan and perform the audit to obtain reasonable assurance about whether the financial statements are free of material misstatement.

Compliance with laws, regulations, contracts, and grants applicable to Center Telephone Company is the responsibility of Center Telephone Company's management. As part of obtaining reasonable assurance about whether the financial statements are free of material misstatement, we preformed tests of Center Telephone Company's compliance with certain provisions of laws, regulations, contracts, and grants. However, the objective of our audit of the financial statements was not to provide an opinion on overall compliance with such provisions. Accordingly, we do not express such an opinion.

The results of our tests disclosed instances of noncompliance that are required to be reported herein under Government Auditing Standards for which the ultimate resolution cannot presently be determined. Accordingly, no provision for any liability that may result has been recognized in Center Telephone Company's 19X9 and 19X8 financial statements.

[Include paragraphs describing the instances of noncompliance noted.]

We considered these instances of noncompliance in forming our opinion on whether Center Telephone Company's 19X9 and 19X8 financial statements are presented fairly, in all material respects, in conformity with generally accepted accounting principles, and this report does not effect our report dated March 2, 19X0, on those financial statements.

This report is intended for the information of the audit committee, management, the Rural Utilities Service, and supplemental lenders. However, this report is a matter of public record and its distribution is not limited.

Certified Public Accountants

March 2, 19X0

Exhibit 5—Sample Report on Internal Controls When Reportable Conditions Were Found

Certified Public Accountants, 1600 Main Street, City, State 24105, The Board of Directors, Center Telephone Company:

We have audited the financial statements of Center Telephone Company as of and for the years ended December 31, 19X9 and 19X8, and have issued our report thereon dated March 2, 19X0.

We conducted our audits in accordance with generally accepted auditing standards and Government Auditing Standards, issued by the Comptroller General of the United States. Those standards require that we plan and perform the audit to obtain reasonable assurance about whether the financial statements are free of material misstatement.

The management of Center Telephone Company is responsible for establishing and maintaining an internal control structure. In fulfilling this responsibility, estimates and judgements by management are required to assess the expected benefits and related costs of internal control structure policies and procedures. The objectives of an internal control structure are to provide management with reasonable, but not absolute, assurance

that the assets are safeguarded against loss from unauthorized use or disposition, and that transactions are executed in accordance with management's authorization and recorded properly to permit the preparation of financial statements in accordance with generally accepted accounting principles. Because of inherent limitations in any internal control structure, errors or irregularities may nevertheless occur and not be detected. Also, projection of any evaluation of the structure to future periods is subject to the risk that procedures may become inadequate because of changes in conditions or that the effectiveness of the design and operation of policies and procedures may deteriorate.

In planning and performing our audit of the financial statements of Center Telephone Company for the years ended December 31, 19X9 and 19X8, we obtained an understanding of the internal control structure. With respect to the internal control structure, we obtained an understanding of the design of relevant policies and procedures and whether they have been placed in operation, and we assessed control risk in order to determine our auditing procedures for the purpose of expressing our opinion on the financial statements and not to provide an opinion on the internal control structure. Accordingly, we do not express such an opinion.

We noted certain matters involving the internal control structure and its operation that we consider to be reportable conditions under standards established by the American Institute of Certified Public Accountants. Reportable conditions involve matters coming to our attention relating to significant deficiencies in the design or operation of the internal control structure that, in our judgement, could adversely affect the entity's ability to record, process, summarize, and report financial data consistent with the assertions of management in the financial statements.

[Include paragraphs to describe the reportable conditions noted.]

A material weakness is a reportable condition in which the design or operation of one or more of the specific internal control structure elements does not reduce to a relatively low level the risk that errors or irregularities in amounts that would be material in relation to the financial statements being audited may occur and not be detected within a timely period by employees in the normal course of performing their assigned functions.

Our consideration of the internal control structure would not necessarily disclose all matters in the internal control structure that might be reportable conditions and, accordingly, would not necessarily disclose all reportable conditions that are also considered to be material weaknesses as defined above. However, we believe none of the reportable conditions described above is a material weakness.

We also noted other matters involving the internal control structure and its operation that we have reported to the management of Center Telephone Company in a separate letter dated March 2, 19X0.

This report is intended for the information of the audit committee, management, and Rural Utilities Service, and supplemental lenders. However, this report is a matter of public record, and its distribution is not limited.

Certified Public Accountants

March 2, 19X0

Exhibit 6—Sample Report on Internal Controls When No Reportable Conditions Were Found

Certified Public Accountants, 1600 Main Street, City, State 24105, The Board of Directors, Center Telephone Company:

We have audited the financial statements of Center Telephone Company, as of and for the years ended December 31, 19X9 and 19X8, and have issued our report thereon dated March 2, 19X0.

We conducted our audit in accordance with generally accepted auditing standards and Government Auditing Standards, issued by the Comptroller General of the United States. Those standards require that we plan and perform the audit to obtain reasonable assurance about whether the financial statements are free of material misstatement.

The management of Center Telephone Company is responsible for establishing and maintaining an internal control structure. In fulfilling this responsibility, estimates and judgements by management are required to assess the expected benefits and related costs of internal control structure policies and procedures. The objectives of an internal control structure are to provide management with reasonable, but not absolute, assurance that assets are safeguarded against loss from unauthorized use or disposition, and that transactions are executed in accordance with management's authorization and recorded properly to permit the preparation of financial statements in accordance with generally accepted accounting principles. Because of inherent limitations in any internal control structure, errors or irregularities may nevertheless occur and not be detected. Also, projection of any evaluation of the structure to future periods is subject to the risk that procedures may become inadequate because of changes in conditions or that the effectiveness of the design and operation of policies and procedures may deteriorate.

In planning and performing our audit of the financial statements of Center Telephone Company for the years ended December 31, 19X9 and 19X8, we obtained an understanding

of the internal control structure. With respect to the internal control structure, we obtained an understanding of the design of relevant policies and procedures and whether they have been placed in operation, and we assessed control risk in order to determine our auditing procedures for the purpose of expressing our opinion on the financial statements and not to provide an opinion on the internal control structure. Accordingly, we do not express such an opinion.

Our consideration of the internal control structure would not necessarily disclose all matters in the internal control structure that might be material weaknesses under standards established by the American Institute of Certified Public Accountants. A material weakness is a condition in which the design or operation of one or more of the specific internal control structure elements does not reduce to a relatively low level the risk that errors or irregularities in amounts that would be material in relation to the financial statements being audited may occur and not be detected within a timely period by employees in the normal course of performing their assigned functions. We noted no matters involving the internal control structure and its operations that we consider to be material weaknesses as defined above.

However, we noted other matters involving the internal control structure and its operation that we have reported to the management of Center Telephone Company in a separate letter dated March 2, 19X0.

This report is intended for the information of the audit committee, management, the Rural Utilities Service, and supplemental lenders. However, this report is a matter of public record, and its distribution is not limited.

Certified Public Accountants

March 2, 19X0

EXHIBIT 7 - SAMPLE FINANCIAL STATEMENTS

CENTER TELEPHONE COMPANY
BALANCE SHEETS - DECEMBER 31, 19X9 AND 19X8
ASSETS (Notes 1 and 2)

	19X9	19X8
CURRENT ASSETS:		
Cash - Construction Funds	$ 21,000	$ 18,000
Cash - General Funds	128,300	140,083
Telecommunications Accounts Receivable (less accumulated provision of $11,597 in 19X9 and $1,490 in 19X8)	139,642	122,623
Notes Receivable	2,500	3,000
Materials and Supplies	103,713	73,964
Prepayments (Note 3)	49,185	62,201
Other Current Assets	1,357	10,131
	445,697	430,002
NONCURRENT ASSETS:		
Nonregulated Investments: (Note 4)		
Net CATV Plant	413,511	407,086
Net Nonregulated Customer Premises Equipment	103,618	- 0 -
Deferred Maintenance and Retirements (Note 5)	40,000	45,000
	557,129	452,086
PROPERTY, PLANT, AND EQUIPMENT: (Note 6)		
Telecommunications Plant in Service	7,401,300	6,650,553
Telecommunications Plant Under Construction	67,626	199,092
Telecommunications Plant Adjustment (Note 7)	176,380	176,380
	7,645,306	7,026,025
Less: Accumulated Provision for Depreciation	1,760,587	1,504,255
	5,884,719	5,521,770
	$6,887,545	$6,403,858

The accompanying notes are an integral part of these statements.

CENTER TELEPHONE COMPANY
BALANCE SHEETS - DECEMBER 31, 19X9 AND 19X8
LIABILITIES AND EQUITIES

	19X9	19X8
CURRENT LIABILITIES:		
Accounts Payable	$ 123,689	$ 290,484
Notes Payable	61,600	70,400
Advance Billings and Payments	2,137	2,243
Customers Deposits	11,878	4,940
Current Maturities of Long-Term Debt (Note 8)	146,646	145,998
Accrued Taxes	242,076	224,566
Other Current Liabilities	8,500	9,079
	596,526	747,710
LONG-TERM DEBT:		
REA Mortgage Notes (Note 8)	4,592,658	4,128,106
OTHER LIABILITIES AND DEFERRED CREDITS:		
Unamortized Investment Tax Credits (Note 10)	53,078	61,377
Deferred Income Taxes (Note 11)	37,137	35,039
	90,215	96,416
STOCKHOLDERS' EQUITY:		
Capital Stock - Common $2 par value - 300,000 Shares Authorized; 102,600 Shares Outstanding 19X9 and 19X8	205,200	205,200
Additional Paid-in Capital	820,800	820,800
Retained Earnings (Note 8)	582,146	405,626
	1,608,146	1,431,626
	$6,887,545	$6,403,858

The accompanying notes are an integral part of these statements.

CENTER TELEPHONE COMPANY
STATEMENTS OF INCOME AND RETAINED EARNINGS
FOR THE YEARS ENDED DECEMBER 31, 19X9 and 19X8

	19X9	19X8
OPERATING REVENUES:		
Basic Local Network Services	$ 836,822	$ 862,205
Network Access Services	125,042	- 0 -
Long Distance Network Services	897,300	775,073
Miscellaneous	144,435	147,100
Less: Uncollectible Revenues	(24,000)	(24,500)
	1,979,599	1,759,878
OPERATING EXPENSES:		
Plant Specific Operations	564,486	480,509
Plant Nonspecific Operations	187,162	393,143
Depreciation and Amortization	274,691	
Customer Operations	94,473	78,772
Corporate Operations	157,453	134,127
	1,278,265	1,086,551
OPERATING TAXES:		
Federal and State Income Taxes - Operating (Notes 10 and 11)	159,845	170,687
Other Operating Taxes	225,013	204,230
Provision for Deferred Taxes (Note 10)	31,566	29,468
Investment Credits - Net	6,201	1,640
	422,625	406,025
OPERATING INCOME:	278,709	267,302
FIXED CHARGES:		
Interest on Long-Term Debt	88,432	85,854
Interest Charged to Construction - Credit	(2,251)	(1,516)
	86,181	84,338
NONREGULATED INCOME - NET (Note 4)	19,902	10,593
NET INCOME FOR PERIOD	212,430	193,557
Retained Earnings - January 1, 19X9 and 19X8	405,626	235,153
Dividends Declared	(35,910)	(23,084)
Retained Earnings - December 31, 19X9 and 19X8	$ 582,146	$ 405,626
Earnings Per Share of Common Stock - Average	$ 2.07	$ 1.89

The accompanying notes are an integral part of these statements.

CENTER COUNTY TELEPHONE COMPANY
STATEMENTS OF CASH FLOWS
FOR THE YEARS ENDED DECEMBER 31, 19X9 AND 19X8

	19X9	19X8
CASH FLOWS FROM OPERATING ACTIVITIES:		
Cash Received from Consumers	$1,962,580	$1,733,289
Cash Paid to Suppliers and Employees	(1,159,158)	(960,459)
Interest Paid	(86,181)	(84,338)
Taxes Paid	(401,316)	(376,643)
Net Cash Provided by Operating Activities	315,925	311,849
CASH FLOWS FROM INVESTING ACTIVITIES:		
Construction and Acquisition of Plant	(619,281)	(507,617)
Investment in CATV Plant	(6,425)	(18,246)
Investment in Nonregulated CPE	(103,618)	
Plant Removal Costs	(18,359)	(27,216)
(Increase)/Decrease In:		
Materials Inventory	(29,749)	(19,478)
Notes Receivable	500	1,000
Deferred Maintenance and Retirements	5,000	(45,000)
Nonregulated Income	19,902	10,593
Net Cash Used in Investing Activities	(752,030)	(605,964)
CASH FLOWS FROM FINANCING ACTIVITIES:		
Dividends Paid	(35,910)	(23,084)
Debt Proceeds	465,200	386,000
Payments on Short-term Debt	(8,800)	(7,500)
Increase/(Decrease) In:		
Consumer Deposits and Advance Payments	6,832	4,200
Net Cash Provided by Financing Activities	427,322	359,616
Net Increase/(Decrease) in Cash	(8,783)	65,501
Cash - Beginning of Year	158,083	92,582
Cash - End of Year	$ 149,300	$ 158,083

The accompanying notes are an integral part of these statements.

CENTER COUNTY TELEPHONE COMPANY
STATEMENTS OF CASH FLOWS
FOR THE YEARS ENDED DECEMBER 31, 19X9 AND 19X8

RECONCILIATION OF NET MARGINS TO NET CASH PROVIDED BY OPERATING ACTIVITIES:

	19X9	19X8
Net Margins	$ 212,430	$ 193,557
Less: Nonregulated Income	(19,902)	(10,593)
Net Income from Regulated Operations	192,528	182,964
Adjustments to Reconcile Net Margins to Net Cash Provided by Operating Activities:		
Depreciation and Amortization	274,691	253,509
Provision for Uncollectible Accounts Receivable	10,107	(3,610)
(Increase)/Decrease In:		
Customer and Other Accounts Receivable	(27,126)	(22,979)
Current and Accrued Assets-Other	8,774	5,119
Prepaid Taxes	10,000	(10,000)
Other Prepaid Expenses	3,016	(5,426)
Increase/(Decrease) In:		
Accounts Payable	(166,795)	(126,472)
Accrued Taxes	17,510	37,742
Other Current Liabilities	(579)	(638)
Deferred Credits	(6,201)	1,640
Total Adjustments	123,397	128,885
Net Cash Provided by Operating Activities	$ 315,925	$ 311,849

The accompanying notes are an integral part of these statements.

CENTER TELEPHONE COMPANY
NOTES TO FINANCIAL STATEMENTS
DECEMBER 31, 19X9 AND DECEMBER 31, 19X8

1. SUMMARY OF SIGNIFICANT ACCOUNTING POLICIES:

Include a brief description of the reporting entity's significant accounting policies in accordance with Accounting Principles Board Opinion No. 22, Disclosure of Accounting Policies.

Disclosure of accounting policies should identify and describe the accounting principles followed by the borrower and the methods of applying those principles that materially affect the determination of financial position, cash flows, and results of operations.

Disclosures of accounting policies do not have to be duplicated in this section if presented elsewhere as an integral part of the financial statements.

2. ASSETS PLEDGED:

Substantially all assets are pledged as security for the long-term debt to REA.

3. PREPAID EXPENSES:

Following is a summary of the amounts recorded as prepaid items as of December 31, 19X9 and 19X8:

	19X9	19X8
Prepaid Taxes	$10,000	$20,000
Prepaid Insurance	3,000	3,000
Prepaid Rent	36,185	39,201
	$49,185	$62,201

4. NONREGULATED INVESTMENTS:

	19X9	19X8
CATV Plant in Service	$430,440	$420,940
CATV Plant Under Construction	9,051	6,500
Total CATV Plant	439,491	427,440
Less: Accumulated Depreciation	25,980	20,354
Net CATV Plant	$413,511	$407,086

CATV plant in service and under construction is stated at cost. The company provides for depreciation on a straight-line basis at annual

rates which will amortize the depreciable property over its estimated useful life.

The offering of CATV services does not involve the joint or shared use of assets in the provision of regulated and nonregulated services.

	19X9	19X8
Nonregulated Customer Premises Equipment - Leased	$109,699	- 0 -
Less: Accumulated Provisions for Depreciation	6,081	- 0 -
	$103,618	$ - 0 -

Nonregulated CPE is stated at cost. The company provides for depreciation on a straight-line basis at an annual rate of depreciation which will amortize the cost of the equipment over its estimated useful life. The leasing of nonregulated customer premises equipment does not involve the joint or shared use of assets in the provision of regulated and nonregulated services.

Following is a summary of net income from nonregulated investments for the year ending December 31, 19X9:

	CATV	Deregulated CPE	Total
Income from Operations	$32,425	$9,151	$41,576
Expenses	18,834	2,840	21,674
	$13,591	$6,311	$19,902

Income tax expense totaled $3,556, of which $2,883 was applicable to CATV operations and $673 was applicable to CPE leasing activities.

DEFERRED CHARGES:

The balance consists of the unamortized portion of the unprovided for loss in service value of plant retired.

Description	Date	Original Balance Net of Income-Tax Savings	Unamortized Balance 19X9	19X8
Aerial Plant	1/1/X7	50,000	40,000	45,000

The Public Utilities Commission granted the company permission to amortize this loss over a ten-year period net of income tax savings of $10,542.

6. INVESTMENT IN TELEPHONE PLANT:

Telephone plant in service and under construction is stated at cost. Listed below are the major classes of the telecommunications plant as of December 31, 19X9 and 19X8:

	19X9	19X8
Land	$ 64,601	64,601
Motor Vehicles	76,417	76,043
Special Purpose Vehicles	58,908	64,679
Other Work Equipment	43,582	40,022
Buildings	564,509	500,267
Furniture and Office Equipment	87,045	79,039
Central Office Equipment	3,171,162	2,746,871
Customer Premises Wiring	64,231	73,915
Poles, Cables, and Wire	2,458,895	2,300,411
Telecommunications Plant in Service - Unclassified	811,950	704,705
	$7,401,300	$6,650,553

The company provides for depreciation on a straight-line basis at annual rates which will amortize the depreciable property over its estimated useful life. Such provision as a percentage of the average balance of telephone plant in service was 7.2 percent in 19X9 and 7.1 percent in 19X8.

Individual plant depreciable rates are as follows:

Motor Vehicles	25%
Special Purpose Vehicles	13%
Other Work Equipment	16%
Buildings	4%
Furniture and Office Equipment	10%
Central Office Equipment	4%
Customer Premises Wiring	10%
Outside Plant - Aerial and Buried Cable	5%
Outside Plant - Pole Lines and Aerial Wire	20%

7. TELEPHONE PLANT ADJUSTMENT:

This adjustment represents the difference between the amount paid for the telephone plant plus associated expenses and the original cost of the plant less the associated depreciation. The company is amortizing the adjustment over a 19 1/2 year period in accordance with an order from the Public Utility Commission.

Annual amortization equals $9,000.

8. MORTGAGE NOTES:

Long-term debt is represented by mortgage notes payable to the United States of America. Following is a summary of outstanding long-term debt:

	19X9	19X8
5% Notes due December 31, 19X6	$4,739,304	$4,274,104
Less: Current Maturities	146,646	145,998
	$4,592,658	$4,128,106

As of December 31, 19X9, there were no unadvanced funds.

Principal and interest installments on the above notes are due quarterly in equal amounts of $63,200. The maturities of long-term debt for each of the five years succeeding the balance sheet date is as follows:

19X0	$146,649
19X1	$153,839
19X2	$155,743
19X3	$143,000
19X4	$139,976

The long-term debt agreements contain restrictions on the payment of dividends or redemption of capital stock. The terms of the Mortgage Agreement require the maintenance of defined amounts of member's equity and working capital after payment of dividends. Under these provisions approximately $293,688 of retained earnings was available for payment of dividends at December 31, 19X9.

9. PENSION PLAN:

Substantially all employees of the company are covered by the XYZ Retirement and Security plan, a multiemployer plan. Pension expense for the years ended 19X9 and 19X8 was $12,000.00 and $11,500.00, respectively.

10 INCOME TAXES AND DEFERRED INCOME TAXES:

The company uses a different method of depreciation on plant additions for income tax purposes. As provided by the Economic Recovery Tax Act of 1981, the company has elected to use the Accelerated Cost Recovery System (ACRS) method of depreciation for plant additions after 1980. In addition to the different depreciation practices for book and tax purposes, the company does not capitalize extraordinary maintenance and retirements and cost of removal charges for tax purposes. Provision is made in the statements of income and retained earnings for the taxes deferred as a result of

the above timing differences. The differences between accounting for book and tax purposes pertaining to income taxes and investment tax credits are accounted for using the normalization method of accounting, as is required for property placed in service after December 31, 1980, under the Economic Recovery Tax Act of 1981.

11. INVESTMENT TAX CREDITS:

The company follows the practice of recording investment tax credits as deferred income, to be amortized over the life of the assets providing the credit as required by the Public Service Commission. Accordingly, Federal income tax expense at December 31, 19X9, was reduced $7,400 by the investment tax credit amortization.

12. COMMITMENTS:

The company has executed contracts for construction programs for approximately $225,000 at December 31, 19X9. The amount unpaid against these commitments at December 31, 19X9 is $185,000.

[56 FR 63360, Dec. 3, 1991, as amended at 61 FR 111, Jan. 3, 1996]

APPENDIX C TO PART 1773—ILLUSTRATIVE INDEPENDENT AUDITOR'S MANAGEMENT LETTER

RUS requires that CPAs auditing RUS borrowers provide a management letter in accordance with §1773.34. This letter must be signed by the CPA, bear the same date as the auditor's report, and be addressed to the borrower's board of directors.

Illustrative Independent Auditor's Management Letter

March 15, 19X6

Board of Directors, [Name of Borrower], [City, State].

We have audited the financial statements of [Name of Borrower] for the year ended December 31, 19X5, and have issued our report thereon dated March 15, 19X6. We conducted our audit in accordance with generally accepted auditing standards, Government Auditing Standards issued by the Comptroller General of the United States, and 7 CFR part 1773, Policy on Audits of Rural Utilities Service (RUS) Borrowers. Those standards require that we plan and perform the audit to obtain reasonable assurance about whether the financial statements are free of material misstatement.

In planning and performing our audit of the financial statements of [Name of Borrower] for the year ended December 31, 19X5, we considered its internal control structure in order to determine our auditing procedures for the purpose of expressing an opinion on the financial statements and not to provide assurance on the internal control structure.

A description of the responsibility of management for establishing and maintaining the internal control structure and the objectives of and inherent limitations in such a structure is set forth in our independent auditors' report on the internal control structure dated March 15, 19X6, and should be read in conjunction with this report.

Our consideration of the internal control structure would not necessarily disclose all matters in the internal control structure that might be material weaknesses under standards established by the American Institute of Certified Public Accountants.

A material weakness is a condition in which the design or operation of the specific internal control structure elements does not reduce to a relatively low level the risk that errors or irregularities in amounts that would be material in relation to the financial statements being audited may occur and not be detected within a timely period by employees in the normal course of performing their assigned functions. However, we noted no matters involving the internal control structure and its operation that we consider to be a material weakness as defined above. [If a material weakness was noted, refer the reader to the independent auditors' report on internal control structure.]

7 CFR 1773.34 requires comments on specific aspects of the internal control structure, compliance with specific RUS loan and security instrument provisions, and other additional matters. We have grouped our comments accordingly. In addition to obtaining reasonable assurance about whether the financial statements are free from material misstatements, at your request, we performed tests of specific aspects of the internal control structure, of compliance with specific RUS loan and security instrument provisions, and of additional matters. The specific aspects of the internal control structure, compliance with specific RUS loan and security instrument provisions, and additional matters tested include, among other

things, the accounting procedures and records, materials control, compliance with specific RUS loan and security instrument provisions set forth in 7 CFR 1773.34 (e)(1), [for telephone borrowers, 7 CFR 1773.34 (e)(2)], related party transactions, and depreciation rates. [For electric borrowers:] The additional matters tested also include a schedule of deferred debits and credits, upon which we express an opinion. In addition, our audit of the financial statements also included the procedures specified in 7 CFR 1773.38–.45. Our objective was not to provide an opinion on these specific aspects of the internal control structure, compliance with specific RUS loan and security instrument provisions, or additional matters, and accordingly, we express no opinion thereon.

No reports (other than our independent auditors' report, our independent auditors' compliance report, and our independent auditors' report on the internal control structure, all dated March 15, 19X6) or summary of recommendations related to our audit have been furnished to management.

Our comments on specific aspects of the internal control structure, compliance with specific RUS loan and security instrument provisions, and other additional matters as required by 7 CFR 1773.34 are presented below.

Comments on Certain Specific Aspects of the Internal Control Structure

We noted no matters regarding [Name of Borrower]'s internal control structure and its operation that we consider to be a material weakness as previously defined with respect to:

—The accounting procedures and records [list other comments];

—The process for accumulating and recording labor, material, and overhead costs, and the distribution of these costs to construction, retirement, and maintenance or other expense accounts [list other comments]; and

—The materials control [list other comments].

Comments on Compliance With Specific RUS Loan and Security Instrument Provisions

Management's responsibility for compliance with laws, regulations, contracts, and grants is set forth in our independent auditors' report on compliance dated March 15, 19X6, and should be read in conjunction with this report. At your request, we have performed the procedures enumerated below with respect to compliance with certain provisions of laws, regulations, and contracts. The procedures we performed are summarized as follows:

—Procedure performed with respect to the requirement to maintain all funds in institutions whose accounts are insured by an Agency of the Federal government:

1. Obtained information from financial institutions with which [Name of Borrower] maintains funds that indicated that the institutions are insured by an Agency of the Federal government.

—Procedures performed with respect to the requirement for a borrower to obtain written approval of the mortgagee to enter into any contract for the operation or maintenance of property, or for the use of mortgaged property by others [see 1773.34 (e)(2)(i) for additional telephone borrower requirements in accordance with 7 CFR 1773.34 (e)] for the year ended December 31, 19X5 of [Name of Borrower]:

1. Obtained and read a borrower prepared schedule of new written contracts entered into during the year for the operation or maintenance of its property, or for the use of its property by others as defined in § 1773.34 (e)(1)(ii) [§ 1773.34 (e)(2)(i) for telephone borrowers]

2. Reviewed Board of Director minutes to ascertain whether board-approved written contracts are included in the borrower-prepared schedule.

3. Noted the existence of written RUS [and other mortgagee] approval of each contract listed by the borrower.

—Procedure performed with respect to the requirement to submit RUS Form 7 or Form 12 [Form 479 for telephone borrowers] to the RUS:

1. Agreed amounts reported in Form 7 or Form 12 [Form 479 for telephone borrowers] to [Name of Borrower]'s records.

The results of our tests indicate that, with respect to the items tested, [Name of Borrower] complied, except as noted below, in all material respects, with the specific RUS loan and security instrument provisions referred to below. With respect to items not tested, nothing came to our attention that caused us to believe that [Name of Borrower] had not complied, in all material respects, with those provisions. The specific provisions tested, as well as any exceptions noted, include the requirements that:

—The borrower maintains all funds in institutions whose accounts are insured by an Agency of the Federal government [list all exceptions];

—The borrower has obtained written approval of the RUS [and other mortgagees] to enter into any contract for the operation or maintenance of property, or for the use of mortgaged property by others as defined in § 1773.34 (e)(1)(ii) [§ 1773.34 (e)(2)(i) for telephone borrowers] [list all exceptions]; and

—The borrower has submitted its Form 7 or Form 12 [Form 479 for telephone borrowers] to the RUS and the Form 7 or Form 12

[Form 479 for telephone borrowers], Financial and Statistical Report, as of December 31, 19X5, represented by the borrower as having been submitted to RUS is in agreement with the [Name of Borrower]'s audited records in all material respects [list all exceptions].

Comments on Other Additional Matters

In connection with our audit of the financial statements of [Name of Borrower], nothing came to our attention that caused us to believe that [Name of Borrower] failed to comply with respect to:

—The reconciliation of subsidiary plant records to the controlling general ledger plant accounts addressed at 7 CFR 1773.34 (c)(1) [list all exceptions];
—The clearing of the construction accounts and the accrual of depreciation on completed construction addressed at 7 CFR 1773.34 (c)(2) [list all exceptions];
—The retirement of plant addressed at 7 CFR 1773.34 (c)(3) and (4) [list all exceptions];
—Sales of plant material, or scrap addressed at 7 CFR 1773.34 (c)(5) [list all exceptions];
—The disclosure of material related party transactions, in accordance with Statement of Financial Accounting Standards No. 57, Related Party Transactions, for the year ended December 31, 19X5, in the financial statements referenced in the first paragraph of this report addressed at 7 CFR 1773.34 (f) [list all exceptions]; and
—For electric borrowers only: depreciation rates addressed at 7 CFR 1773.34 (g) [list all exceptions].

For Electric Borrowers Only: Detailed Schedule of Deferred Debits and Deferred Credits

Our audit was made for the purpose of forming an opinion on the basic financial statements taken as a whole. The detailed schedule of deferred debits and deferred credits required by 7 CFR 1773.34 (h) and provided below is presented for purposes of additional analysis and is not a required part of the basic financial statements. This information has been subjected to the auditing procedures applied in our audit of the basic financial statements and, in our opinion, is fairly stated in all material respects in relation to the basic financial statements taken as a whole.

[The detailed schedule of deferred debits and deferred credits would be included here. The total amount of deferred debits and deferred credits as reported in the schedule must agree with the totals reported on the Balance Sheet under the specific captions of ''Deferred Debits'' and ''Deferred Credits''. Those items that have been approved, in writing, by RUS should be clearly indicated.]

This report is intended solely for the information and use of the board of directors, management, and the RUS and supplemental lenders. However, this report is a matter of public record and its distribution is not limited.

Certified Public Accountants

[61 FR 113, Jan. 3, 1996]

PART 1775—TECHNICAL ASSISTANCE AND TRAINING GRANTS

Sec.
1775.1 General.
1775.2 [Reserved]
1775.3 Objectives.
1775.4 Definitions.
1775.5 Source of funds.
1775.6 Allocation of funds.
1775.7 Eligibility.
1775.8 Purpose.
1775.9 [Reserved]
1775.10 Limitations.
1775.11 Equal opportunity requirements.
1775.12 Environmental requirements.
1775.13 Preapplications.
1775.14 Priority.
1775.15 [Reserved]
1775.16 Application processing.
1775.17 [Reserved]
1775.18 Grant approval and obligation of funds.
1775.19 Fidelity bond.
1775.20–1775.21 [Reserved]
1775.22 Fund disbursement.
1775.23 Grant cancellation or major changes.
1775.24 Reporting.
1775.25 Audit.
1775.26 Grant Agreement.
1775.27 Grant servicing.
1775.28 Delegation of authority.
1775.29–1775.99 [Reserved]
1775.100 OMB control number.

AUTHORITY: 5 U.S.C. 301; 7 U.S.C. 1989; 16 U.S.C. 1005.

SOURCE: 62 FR 33469, June 19, 1997, unless otherwise noted.

§ 1775.1 General.

This part sets forth the policies and procedures for making Technical Assistance grants. Grants for technical assistance and training for water and waste disposal facilities are authorized under section 306(a)(16)(A) of the Consolidated Farm and Rural Development Act, (CONACT), (7 U.S.C. 1926(a)), as amended. Grants for solid waste management are authorized under Section 310B of the CONACT, (7 U.S.C. 1932), as amended. Any processing or servicing activity conducted pursuant to this part involving authorized assistance to

Agency employees, members of their families, known close relatives, or business or close personal associates, is subject to the provisions of subpart D of part 1900 of this title. Applicants for this assistance are required to identify any known relationship or association with an Agency employee.

§1775.2 [Reserved]

§1775.3 Objectives.

(a) The objectives of the Technical Assistance and Training Grant Program are to:

(1) Identify and evaluate solutions to water and waste disposal problems in rural areas.

(2) Assist applicants in preparing applications for water and waste grants made in accordance with part 1780 of this chapter.

(3) Improve operation and maintenance of existing water and waste disposal facilities in rural areas.

(b) The objectives of the Solid Waste Management Grant Program are to:

(1) Reduce or eliminate pollution of water resources.

(2) Improve planning and management of solid waste sites.

§1775.4 Definitions.

Association. An entity, including a small city or town, that is eligible for Rural Utilities Service (RUS) water and waste financial assistance in accordance with §1780.7 of this chapter.

Grantee. An entity with whom The Agency has entered into a grant agreement under this program to provide technical assistance and/or training to associations as defined in this section.

Low income. Median household income below the poverty line for a family of four as defined in Section 673(2) of the Community Services Block Grant Act (42 U.S.C. 9902(2)), or below 80 percent of the Statewide nonmetropolitan median household income.

Regional. For purposes of the Solid Waste Management grant program, as implemented through this part, regional is defined as any multi-jurisdictional area including multi-State or any multi-jurisdictional area within a State.

Rural area. For water and waste disposal facilities the terms ''rural'' or ''rural area'' will not include any area in a city or town with population in excess of 10,000 inhabitants according to the latest decennial census of the United States.

State. Any of the fifty States, the Commonwealth of Puerto Rico, the Western Pacific Territories, Marshall Islands, Federated States of Micronesia, Republic of Palau, and the U.S. Virgin Islands.

§1775.5 Source of funds.

Technical Assistance and Training grants awarded will be made from not less than one (1) percent or, at the discretion of the Agency Administrator, not more than three (3) percent of any appropriations for grants under Section 306(a)(2) of the CONACT, (7 U.S.C. 1926(a)). Technical Assistance and Training grant funds not obligated by September 1 of each fiscal year will be used for water and waste grants made in accordance with part 1780 of this chapter. This section does not apply to Solid Waste Management grants.

§1775.6 Allocation of funds.

Control of Technical Assistance and Training grant and Solid Waste Management grant funds will be retained in the National office and allocated on a project case basis. These funds are not available for obligation by States.

§1775.7 Eligibility.

(a) Entities eligible for Technical Assistance and Training (TAT) grants are private nonprofit organizations that have been granted tax exempt status by the Internal Revenue Service (IRS) of the United States.

(b) Entities eligible for Solid Waste Management (SWM) grants are nonprofit organizations, including:

(1) Private nonprofit organizations that have been granted tax exempt status by the IRS; and

(2) Public bodies including local governmental-based multi-jurisdictional organizations.

(c) Applicants for either TAT or SWM grants must also have the proven ability, background, experience, legal authority, and actual capacity to provide technical assistance and/or training on a regional basis to associations as provided in §1775.3.

§ 1775.8 Purpose.

(a) Technical Assistance and/or Training Grants may be used to:

(1) Identify and evaluate solutions to water problems of associations in rural areas relating to:

(i) Source.

(ii) Storage.

(iii) Treatment.

(iv) Distribution.

(2) Identify and evaluate solutions to waste problems of associations in rural areas relating to:

(i) Collection.

(ii) Treatment.

(iii) Disposal.

(3) Assist associations that have filed a preapplication with the Agency in the preparation of water and/or waste loan and/or grant applications.

(4) Provide training to association personnel that will improve the management, operation and maintenance of water and waste disposal facilities.

(5) To pay the expenses associated with providing the technical assistance and/or training authorized in paragraphs (a) (1) through (4) of this section.

(b) Solid Waste Management grants may be used to:

(1) Evaluate current landfill conditions to determine threats to water resources.

(2) Provide technical assistance and/or training to enhance operator skills in the maintenance and operation of active landfills.

(3) Provide technical assistance and/or training to help communities reduce the solid waste stream.

(4) Provide technical assistance and/or training for operators of landfills which are closed or will be closed in the near future with the development/implementation of closure plans, future land use plans, safety and maintenance planning, and closure scheduling within permit requirements.

§ 1775.9 [Reserved]

§ 1775.10 Limitations.

Grant funds may not be used to:

(a) Recruit applications for the Agency's water and waste loan and/or any loan and/or grant program.

(b) Duplicate current services, replacement or substitution of support previously provided such as those performed by an association's consultant in developing a project.

(c) Fund political activities.

(d) Pay for capital assets, the purchase of real estate or vehicles, improve and renovate office space, or repair and maintain privately-owned property.

(e) Pay for construction or operation and maintenance costs.

(f) Pay costs incurred prior to the effective date of grants made under this part.

(g) Pay for technical assistance as defined in this part which duplicates assistance provided to implement an action plan funded by Forest Service (FS) under the National Forest-Dependent Rural Communities Economic Diversification Act (7 U.S.C. 6601 note) for 5 continuous years from the date of grant approval by the FS. To avoid duplicate assistance, the grantee shall coordinate with the FS and RUS to ascertain if a grant has been made in a substantially similar geographical or defined local area in a State for technical assistance under the above program. The grantee will provide documentation to FS and RUS regarding the contact with each agency. Under its program, the FS assists rural communities dependent upon national forest resources by establishing rural forestry and economic diversification action teams which prepare action plans. Action plans are intended to provide opportunities to promote economic diversification and enhance local economies dependent upon national forest resources.

§ 1775.11 Equal opportunity requirements.

The policies and regulations contained in subpart E of part 1901 of this title apply to grants made under this part.

§ 1775.12 Environmental requirements.

The policies and regulations contained in subpart G of part 1940 of this title apply to grants made for the purposes in § 1775.8.

§ 1775.13 Preapplications.

(a) Applicants will file an original and one copy of SF–424.1, ''Application

for Federal Assistance (For Non-construction),'' with the appropriate Agency office between October 1 and December 31 each fiscal year. This form is available in all Agency offices. Applicants proposing to provide technical assistance and/or training in only one State will apply through the appropriate State Office. The State Office will review and forward preapplications, with their recommendations, within seven working days to the National Office, Attention: Water and Waste Disposal. Applicants providing technical assistance and/or training in more than one State will forward the preapplication to the Assistant Administrator, Water and Waste, Rural Utilities Service, Washington, DC 20250. Preapplications for Solid Waste Management grants that cannot be funded in the fiscal year received will not be retained for consideration for funding in the following fiscal year and will be handled as outlined in paragraph (g) of this section.

(b) All preapplications shall be accompanied by:

(1) Evidence of applicant's legal existence and authority in the form of certified copies of organizational documents and a certified list of directors and officers with their respective terms.

(2) Evidence tax exempt status from the Internal Revenue Service.

(3) Brief written narrative which includes items such as:

(i) The proposed service(s) to be provided, including the benefits of the technical assistance and/or training.

(ii) Area to be served.

(iii) Name of association(s) or type of association(s) that will be served.

(iv) Median household income of the population to be served by each association(s).

(v) Grantee's experience, including experience of key staff members and person(s) providing the technical assistance and/or training.

(vi) The number of months duration of the project or service and the estimated time it will take from grant approval to beginning of service.

(vii) Method used to select the association(s) that will receive the service.

(viii) Brief description of how the service will be provided, such as, through currently employed personnel or some other method.

(ix) Method to be used for delivery of the service, including personnel to be utilized and tasks to be contracted, if any.

(4) Latest financial information to show the organization's financial capacity to carry out the proposed work. As a minimum, the information should include a balance sheet and an income statement. A current audit report is preferred.

(5) Estimated breakdown of costs including those to be funded by grantee as well as other sources.

(6) Budget and accounting system in place or proposed.

(7) Evaluation method to determine if objective(s) of the proposed activity is being accomplished.

(c) Upon receipt of a preapplication, the National Office will:

(1) Review and evaluate the preapplication and accompanying documents;

(2) Request from the Office of General Counsel (OGC), a legal determination of applicant's legal existence and authority to provide technical assistance and/or training. The legal opinion will be obtained from the Regional Attorney servicing the area where the applicant's headquarters is located; and

(3) Normally, respond to the applicant within 45 days after December 31 of each year using Form AD–622, ''Notice of Preapplication Review Action,'' indicating the action taken on the preapplication.

(d) Applicants whose preapplications are found to be ineligible will be given notice by use of Form AD–622 and advised of their appeal rights under subpart B of part 1900 of this title.

(e) Applicants who are eligible, but do not have the priority necessary for further consideration will be notified with Form AD–622, which includes the following statements:

''Your proposal cannot be funded within the available funds.''

''You are advised against incurring obligations which cannot be fulfilled without Agency funds.''

(f) Applicants that are eligible for funding within the available funds will be provided forms and instructions for

filing a complete application. Applicants should be advised against incurring obligations which cannot be fulfilled without Agency funds.

(g) Applicants who have filed preapplications for solid waste management grant funds that cannot be funded within the available funds will be notified, using Form AD–622, that their preapplication will not be retained. They will also be notified that they may file a new preapplication when funds again become available using the following statement:

''If the Agency receives funding for the program in FY __, you may file a new preapplication on or after October 1, 19__.''

§ 1775.14 Priority.

(a) The preapplication and supporting information will be used to determine the applicant's priority for available funds for the Technical Assistance and Training Grant program. The following specific criteria will be considered in the competitive selection of Technical Assistance and Training Grant recipients:

(1) Applicant's demonstrated capability and past performance in providing technical assistance and/or training to rural associations.

(2) The extent to which the population of the associations served have low income.

(3) Applicant's financial and if applicable, in-kind resource that will maximize use of technical assistance and/or training funds for direct staffing of activities that are delivered to the associations.

(4) The extent to which the project will be cost effective, including but not limited to the ratio of proposed personnel to the cost of the project, the cost per associations served by the project, and the expected benefits from the project.

(5) How well the proposal coincides with the objectives of the Agency's Water and Waste Disposal program authorized in part 1780 of this chapter.

(6) Applicants proposing to serve multi-state, regional, or nationwide areas.

(7) Applicants whose timeframe for completion of the technical assistance and/or training grant project is 12 months or less.

(b) Preapplications received from local governmental-based, multi- jurisdictional organizations for the SWM grant program will be given priority within the available funds.

§ 1775.15 [Reserved]

§ 1775.16 Application processing.

(a) Upon notification on Form AD–622 that the applicant is eligible for funding, the following will be submitted to the National Office by the applicant:

(1) SF–424.1.

(2) Proposed scope of work detailing the training and/or technical assistance to be accomplished and timeframes for completion of each task.

(3) Proposed budget.

(4) Other requested information needed by the Agency to make a grant award determination.

(b) The following forms and documents will be part of the grant docket:

(1) Form RD 400–1, ''Equal Opportunity Agreement.''

(2) Form RD 400–4, ''Assurance Agreement.''

(3) Grant Agreement signed by the applicant.

(4) Scope of work prepared by the applicant.

(5) Form RD 1940–1, ''Request for Obligation of Funds.''

(c) If the applicant fails to submit the application and related material by the date shown on Form AD–622 (normally 30 days from the date of Form AD–622), the Agency may discontinue consideration of the application.

§ 1775.17 [Reserved]

§ 1775.18 Grant approval and obligation of funds.

(a) The National Office will review the application and other documents to determine whether the proposal complies with this part.

(b) All grants made under this part will be approved and obligated by the Agency Administrator or designee.

(c) The obligation of funds will be handled in accordance with part 1780 of this chapter.

(d) An executed copy of the Grant Agreement and scope of work will be sent to the applicant on the obligation date, along with a copy of Form RD

1940–1. The Agency will retain the executed original of the Grant Agreement. The grant will be considered closed on the obligation date.

(e) If the grant is not approved, the applicant will be notified in writing of the reason(s) for rejection. The notification to the applicant will state that a review of this decision by the Agency may be requested by the applicant under subpart B of part 1900 of this title.

§1775.19 Fidelity bond.

Prior to the advancing of funds, the grantee will provide fidelity bond coverage for the positions of persons entrusted with the receipt and disbursement of its funds and the custody of valuable property. The amount of the bond will be at least equal to the maximum amount of monies that the grantee will have on hand at any one time for technical assistance and/or training provided in accordance with the Grant Agreement. Unless prohibited by State Law, the United States, acting through the Agency, will be named as co-obligee in the bond. The bond must be obtained from a company listed in Department of Treasury Circular 570, as amended. Form RD 440–24, ''Position Fidelity Schedule Bond Declarations,'' may be used. A certified power-of-attorney with effective date will be attached to the bond.

§§1775.20—1775.21 [Reserved]

§1775.22 Fund disbursement.

Grantees will be reimbursed as follows:

(a) Standard Form (SF) 270, ''Request for Advance or Reimbursement,'' will be completed by the applicant and submitted to the National Office not more frequently than monthly.

(b) Upon receipt of a properly completed SF 270, the funds will be requested through the field office terminal system. Ordinarily, payment will be made within 30 days after receipt of a proper request for reimbursement.

(c) Grantees are encouraged to use minority banks (a bank which is owned by at least 50 percent minority group members) for the deposit and disbursement of funds. A list of minority owned banks can be obtained from the Office of Minority Business Enterprise, Department of Commerce, Washington, DC 20230.

§1775.23 Grant cancellation or major changes.

If it is determined that a project will not be funded or if major changes in the scope of the project are made after release of the approval announcement, the Administrator will notify the Director of Legislative Affairs and Public Information Staff (LAPIS) giving the reasons for such action. In the case of a grant cancellation, Form RD 1940–10, ''Cancellation of U.S. Treasury Check and/or Obligation,'' will not be submitted to the Finance Office until 5 working days after notifying the Director of LAPIS, and grant obligation cancellations will not be submitted to the National Office until 5 working days after notifying the Director of LAPIS.

§1775.24 Reporting.

Standard Form (SF) 269, ''Financial Status Report,'' SF 272, ''Federal Cash Transactions Report,'' and a project performance activity report will be required of all grantees on a quarterly basis. A final project performance report will be required with the last SF 269. The final report may serve as the last quarterly report. Grantees shall constantly monitor performance to ensure that time schedules are being met, projected work by time periods is being accomplished, and other performance objectives are being achieved. All multi-state, regional, and nationwide grantees are to submit an original of each report to the National Office. Grantees serving only one State are to submit an original of each report to the State Program Official. The State Program Official will review and forward to the National Office the report with comments. The project performance reports shall include, but not be limited to, the following:

(a) A comparison of actual accomplishments to the objectives established for that period;

(b) Reasons why established objectives were not met;

(c) Problems, delays, or adverse conditions which will affect attainment of overall project objectives, prevent meeting time schedules or objectives,

or preclude the attainment of particular project work elements during established time periods. This disclosure shall be accompanied by a statement of the action taken or planned to resolve the situation; and

(d) Objectives and timetable established for the next reporting period.

§ 1775.25 Audit.

The grantee will provide an audit report prepared in accordance with § 1780.47 of this chapter within 90 days after project completion.

§ 1775.26 Grant Agreement.

RUS Bulletin 1775–1 is a Grant Agreement which sets forth the procedures for making and servicing grants made under this part. Bulletins, instructions and forms referenced are for use in administering grants made under this part and are available from any USDA/Rural Development office or the Rural Utilities Service, United States Department of Agriculture, Washington, D.C. 20250–1500.

§ 1775.27 Grant servicing.

Grants will be serviced in accordance with the grant agreement and subpart E of part 1951 of this title. Subpart B of part 1900 of this title will be followed when grants are terminated for cause.

§ 1775.28 Delegation of authority.

The authority under this part is redelegated to the Assistant Administrator, Water and Waste, except for the discretionary authority contained in § 1775.5. The Assistant Administrator, Water and Waste may redelegate the authority in this section.

§§ 1775.29—1775.99 [Reserved]

§ 1775.100 OMB control number.

The collection of information requirements contained in this part have been approved by the Office of Management and Budget and have been assigned OMB control number 0575–0123. Public reporting for this collection of information is estimated to vary from 15 minutes to 4 hours per response, with an average of 1 hour per response including time for reviewing instructions, searching existing data sources, gathering and maintaining the data needed, and completing and reviewing the collection of information. Send comments regarding this burden estimate or any other aspect of this collection of information, including suggestions for reducing this burden, to Department of Agriculture, Clearance Officer, OIRM, Room 404–W, Washington, DC 20250; and to the Office of Management and Budget, Paperwork Reduction Project (OMB 0575–0123), Washington, DC 20503.

PART 1777—SECTION 306C WWD LOANS AND GRANTS

Sec.

1777.1 General.
1777.2 [Reserved]
1777.3 Objective.
1777.4 Definitions.
1777.5—1777.10 [Reserved]
1777.11 Making, processing, and servicing loans and grants.
1777.12 Eligibility.
1777.13 Project priority.
1777.14—1777.20 [Reserved]
1777.21 Use of funds.
1777.22—1777.30 [Reserved]
1777.31 Rates.
1777.32—1777.40 [Reserved]
1777.41 Individual loans and grants.
1777.42 Delegation of authority.
1777.43 Bulletins.
1777.44—1777.99 [Reserved]
1777.100 OMB control number.

AUTHORITY: 5 U.S.C. 301; 7 U.S.C. 1989; 16 U.S.C. 1005.

SOURCE: 62 FR 33473, June 19, 1997, unless otherwise noted.

§ 1777.1 General.

(a) This part outlines Rural Utilities Service (RUS) policies and procedures for making Water and Waste Disposal (WWD) loans and grants authorized under section 306C of the Consolidated Farm and Rural Development Act (7 U.S.C. 1926(c)), as amended.

(b) Agency officials will maintain liaison with officials of other Federal, State, regional, and local development agencies to coordinate related programs to achieve rural development objectives.

(c) Agency officials shall cooperate with appropriate State agencies in making loans and/or grants that support State strategies for rural area development.

(d) Funds allocated in accordance with this part will be considered for use by Indian tribes within the State regardless of whether State development strategies include Indian reservations within the State's boundaries. Indians residing on such reservations must have an equal opportunity to participate in this program.

(e) Federal statutes provide for extending the Agency's financial programs without regard to race, color, religion, sex, national origin, marital status, age, or physical/mental handicap (provided the participant possesses the capacity to enter into legal contracts).

§1777.2 [Reserved]

§1777.3 Objective.

The objective of the Section 306C WWD Loans and Grants program is to provide water and waste disposal facilities and services to low-income rural communities whose residents face significant health risks.

§1777.4 Definitions.

Applicant. Entity that receives the Agency loan or grant under this part. The entities can be public bodies such as municipalities, counties, districts, authorities, or other political subdivisions of a State, and organizations operated on a not-for-profit basis such as associations, cooperatives, private corporations, or Indian tribes on Federal and State reservations, and other Federally recognized Indian tribes.

Colonia. Any identifiable community designated in writing by the State or county in which it is located; determined to be a colonia on the basis of objective criteria including lack of potable water supply, lack of adequate sewage systems, and lack of decent, safe, and sanitary housing, inadequate roads and drainage; and existed and was generally recognized as a colonia before October 1, 1989.

Cooperative. A cooperative formed specifically for the purpose of the installation, expansion, improvement, or operation of water supply or waste disposal facilities or systems.

Individual. Recipient of a loan or grant through the applicant to facilitate use of the applicant's water and/or waste disposal system.

Rural areas. Includes unincorporated areas and any city or town with a population not in excess of 10,000 inhabitants according to the most recent decennial census of the United States. They can be located in any of the 50 States, the Commonwealth of Puerto Rico, the Western Pacific Territories, Marshall Islands, Federated States of Micronesia, Republic of Palau, and the U.S. Virgin Islands.

§§1777.5—1777.10 [Reserved]

§1777.11 Making, processing, and servicing loans and grants.

Unless specifically modified by this part, loans and/or grants will be made, processed, and serviced in accordance with part 1780 of this chapter.

§1777.12 Eligibility.

(a) The provisions of paragraphs (a)(1) and (2) of this section do not apply to a rural area recognized as a colonia. Otherwise, the facility financed under this part must provide water and/or waste disposal services to rural areas of a county where, on the date preapplication is received by the Agency, the:

(1) Per capita income of the residents is not more than 70 percent of the most recent national average per capita income, as determined by the Department of Commerce; and

(2) Unemployment rate of the residents is not less than 125 percent of the most recent national average unemployment rate, as determined by the Bureau of Labor Statistics.

(b) Residents of the rural area to be served must face significant health risks due to the fact that a significant proportion of the community's residents do not have access to, or are not served by, adequate, affordable, water and/or waste disposal systems. The file should contain documentation to support this determination.

§1777.13 Project priority.

Paragraphs (a) through (d) of this section indicate items and conditions which must be considered in selecting preapplications for further development. When ranking eligible

preapplications for consideration for limited funds, Agency officials must consider the priority items met by each preapplication and the degree to which those priorities are met.

(a) *Preapplications.* The preapplication and supporting information submitted with it will be used to determine applicant eligibility and the proposed project's priority for available funds. Applicants determined ineligible will be advised of their appeal rights in accordance with 7 CFR part 11.

(b) *State Office review.* All preapplications will be reviewed and scored for funding priority at each State Office using RUS Bulletin 1777–2. Funds will be requested from the National Office, Attention: Water and Waste Processing, using RUS Bulletin 1777–3. Eligible applicants that cannot be funded should be advised that funds are not available and advised of their appeal rights as set forth in 7 CFR part 11.

(c) *National Office.* The National Office will allocate funds on a project-by-project basis as requests are received. If the amount of funds requested exceeds the amount of funds available, the total project score will be used to select projects for funding. The RUS Administrator may assign up to 35 additional points that will be considered in the total points for items such as geographic distribution of funds, severity of health risks, etc.

(d) *Selection priorities.* The priorities described below will be used to rate preapplications and in selecting projects for funding. Points will be distributed as indicated in paragraphs (d)(1) through (d)(5) of this section and will be used in selecting projects for funding. A copy of RUS Bulletin 1777–2, used to rate applications, should be placed in the case file for future reference.

(1) *Population.* The proposed project will serve an area with a rural population:

(i) Not in excess of 1,500—30 points.

(ii) More than 1,500 and not in excess of 3,000—20 points.

(iii) More than 3,000 and not in excess of 5,500—10 points.

(2) *Income.* The median household income of population to be served by the proposed project is:

(i) Not in excess of 50 percent of the statewide nonmetropolitan median household income—40 points.

(ii) More than 50 percent and not in excess of 60 percent of the statewide nonmetropolitan median household income—20 points.

(iii) More than 60 percent and not in excess of 70 percent of the statewide nonmetropolitan median household income—10 points.

(3) *Joint financing.* The amount of joint financing committed to the proposed project is:

(i) Twenty percent or more private, local, or State funds except Federal funds channeled through a State agency—10 points.

(ii) Five to 19 percent private, local, or State funds except Federal funds channeled through a State agency—5 points.

(4) *Colonia.* (See definition in § 1777.4). The proposed project will provide water and/or waste disposal services to the residents of a colonia—50 points.

(5) *Discretionary.* In certain cases, the State Program Official may assign up to 15 points for items such as natural disaster, to improve compatibility/coordination between the Agency's and other agencies' selection systems, to assist those projects that are the most cost effective, high unemployment rate, severity of health risks, etc. A written justification must be prepared and attached to RUS Bulletin 1777–2 each time these points are assigned.

§§ 1777.14—1777.20 [Reserved]

§ 1777.21 Use of funds.

(a) *Applicant.* Funds may be used to:

(1) Construct, enlarge, extend, or otherwise improve community water and/or waste disposal systems. Otherwise improve would include extending service lines to and/or connecting residence's plumbing to the system.

(2) Make loans and grants to individuals for extending service lines to and/or connecting residences to the applicant's system. The approval official must determine that this is a practical and economical method of connecting individuals to the community water

and/or waste disposal system. Loan funds can only be used for loans, and grant funds can only be used for grants.

(3) Make improvements to individual's residence when needed to allow use of the water and/or waste disposal system.

(4) Grants can be made up to 100 percent of eligible project costs.

(b) *Individuals.* Funds may be used to:

(1) Extend service lines to residence.

(2) Connect service lines to residence's plumbing.

(3) Pay reasonable charges or fees for connecting to a community water and/or waste disposal system.

(4) Pay for necessary installation of plumbing and related fixtures within dwellings lacking such facilities. This is limited to one bathtub, sink, commode, kitchen sink, water heater, and outside spigot.

(5) Construction and/or partitioning off a portion of dwelling for a bathroom, not to exceed 4.6 square meters (48 square feet) in size.

(6) Pay reasonable costs for closing abandoned septic tanks and water wells when necessary to protect the health and safety of recipients of a grant in paragraphs (b)(1) or (b)(2) of this section and is required by local or State law.

§§ 1777.22—1777.30 [Reserved]

§ 1777.31 Rates.

(a) Applicant loans will bear interest at the rate of 5 percent per annum.

(b) Individual loans will bear interest at the rate of:

(1) Five percent per annum; or

(2) The Federal Financing Bank rate for loans of a similar term at the time of Agency loan approval, whichever is less.

§§ 1777.32—1777.40 [Reserved]

§ 1777.41 Individual loans and grants.

(a) The amount of loan and grant funds approved by the Agency will be based on the need shown in the application and an implementation plan submitted by the applicant. The implementation plan will include such things as: purpose, how funds will be used, proposed application process, construction requirements, control and disbursement of funds, etc. The implementation plan will be attached to RUS Bulletin 1777–1.

(b) RUS Bulletin 1777–1 is a Memorandum of Agreement which sets forth the procedures and regulations for making and servicing loans and grants made by applicants to individuals. The State Program Official is authorized to enter into a Memorandum of Agreement with any applicant providing loans and/or grants to individuals. The Memorandum of Agreement can be amended to comply with State law and recommendations by the Office of General Counsel. It may also be amended to eliminate references to loans and/or grants if no loan and/or grant is involved. The State Program Official is responsible for:

(1) Ensuring that all provisions of the Agreement are understood.

(2) Determining that the applicant has the ability to make and service loans and/or grants in the manner outlined in the Agreement.

(c) Agency funds remaining after providing individual loans and/or grants will be returned to the Agency. The funds should be disbursed to individuals within 1 year from the date water and/or waste disposal service is available to the individuals. The State Program Official can make an exception to this 1 year requirement if written justification is provided by the applicant.

§ 1777.42 Delegation of authority.

The State Program Official is responsible for the overall implementation of the authorities contained in this part and may redelegate any such authority to appropriate Agency employees.

§ 1777.43 Bulletins.

RUS Bulletin 1780–12 referenced in part 1780 of this chapter and RUS Bulletin 1777–1, 1777–2 and 1777–3 are for use in administering loans and/or grants made under this part. Bulletins, instructions and forms are available from any USDA/Rural Development office or the Rural Utilities Service, United States Department of Agriculture, Washington, DC 20250–1500.

§§ 1777.44—1777.99 [Reserved]

§ 1777.100 OMB control number.

The reporting and recordkeeping requirements contained in this part have been approved by the Office of Management and Budget and assigned OMB control number 0570–0001. Public reporting burden for this collection of information is estimated to vary from 5 to 30 hours per response with an average of 17.5 hours per response, including the time for reviewing instructions, searching existing data sources, gathering and maintaining the data needed, and completing and reviewing the collection of information. Send comments regarding this burden estimate or any other aspect of this collection of information, including suggestions for reducing this burden, to U.S. Department of Agriculture, Clearance Officer, OIRM, Room 404–W, Washington, DC 20250; and to the Office of Information and Regulatory Affairs, Office of Management and Budget, Washington, DC 20503.

PART 1778—EMERGENCY COMMUNITY WATER ASSISTANCE GRANTS

Sec.

1778.1 General.
1778.2 [Reserved]
1778.3 Objective.
1778.4 Definitions.
1778.5 [Reserved]
1778.6 Eligibility.
1778.7 Project priority.
1778.8 [Reserved]
1778.9 Uses.
1778.10 Restrictions.
1778.11 Maximum grants.
1778.12 [Reserved]
1778.13 Set-aside.
1778.14 Other considerations.
1778.15—1778.20 [Reserved]
1778.21 Application processing.
1778.22 Planning development and procurement.
1778.23 Grant closing and disbursement of funds.
1778.24—1778.30 [Reserved]
1778.31 Performing development.
1778.32 Grant cancellation.
1778.33 [Reserved]
1778.34 Grant servicing.
1778.35 Subsequent grants.
1778.36 [Reserved]
1778.37 Forms, Instructions and Bulletins.
1778.38—1778.99 [Reserved]
1778.100 OMB control number.

AUTHORITY: 5 U.S.C. 301; 7 U.S.C. 1989; 16 U.S.C. 1005.

SOURCE: 62 FR 33475, June 19, 1997, unless otherwise noted.

§ 1778.1 General.

(a) This part outlines policies and procedures for making Emergency Community Water Assistance Grants authorized under Section 306A of the Consolidated Farm and Rural Development Act, (7 U.S.C. 1926(a)), as amended. Any processing or servicing activity conducted pursuant to this part involving authorized assistance to Agency employees, members of their families, known close relatives, or business or close personal associates, is subject to the provisions of subpart D of part 1900 of this title. Applicants for this assistance are required to identify any known relationship or association with an Agency employee.

(b) Agency officials will maintain liaison with officials of other Federal, State, regional and local development agencies to coordinate related programs to achieve rural development objectives.

(c) Agency officials shall cooperate with appropriate State agencies in making grants that support State strategies for rural area development.

(d) Funds allocated for use in accordance with this part are also to be considered for use by Indian tribes within the State regardless of whether State development strategies include Indian reservations within the State's boundaries. Indians residing on such reservations must have an equal opportunity along with other rural residents to participate in the benefits of this program. This includes equal application of outreach activities of Field Offices.

(e) Federal statutes provide for extending the Agency financial programs without regard to race, color, religion, sex, national origin, marital status, age, or physical/mental handicap (provided the participant possesses the capacity to enter into legal contracts).

§1778.2 [Reserved]

§1778.3 Objective.

The objective of the Emergency Community Water Assistance Grant Program is to assist the residents of rural areas that have experienced a significant decline in quantity or quality of water to obtain adequate quantities of water that meet the standards set by the Safe Drinking Water Act (42 U.S.C. 300f et seq.) (SDWA).

§1778.4 Definitions.

Emergency. Occurrence of an incident such as, but not limited to, a drought, earthquake, flood, hurricane, disease outbreak, or chemical spill.

Rural areas. Includes any area in any city or town with a population not in excess of 10,000 inhabitants according to the most recent decennial census of the United States, located in any of the fifty States, the Commonwealth of Puerto Rico, the Western Pacific Territories, Marshall Islands, Federated States of Micronesia, Republic of Palau, and the U.S. Virgin Islands.

Significant decline in quality. A significant decline in quality of potable water is where the present community source or delivery system does not meet, as a result of an emergency, the current SDWA requirements. For a private source or delivery system a significant decline in quality is where the water is no longer potable as a result of an emergency.

Significant decline in quantity. A significant decline in the quantity is caused by a disruption of the potable water supply by an emergency. The disruption in quantity of water prevents the present source or delivery system from supplying potable water needs to rural residents. This would not include a decline in excess water capacity.

§1778.5 [Reserved]

§1778.6 Eligibility.

(a) Grants may be made to public bodies and private nonprofit corporations serving rural areas. Public bodies include counties, cities, townships, incorporated towns and villages, boroughs, authorities, districts, and other political subdivisions of a State. Public bodies also includes Indian tribes on Federal and State reservations and other Federally recognized Indian Tribal groups in rural areas.

(b) In the case of grants made to alleviate a significant decline in quantity or quality of water available from the water supplies of rural residents, the applicant must demonstrate that the decline occurred within two years of the date the application was filed with the Agency. This would not apply to grants made for repairs, partial replacement, or significant maintenance on an established water system.

§1778.7 Project priority.

Paragraphs (a) through (d) of this section indicate items and conditions which must be considered in selecting applications for further development. When ranking eligible applications for consideration for limited funds, Agency officials must consider the priority items met by each application and the degree to which those priorities are met.

(a) *Applications*. The application and supporting information submitted with it will be used to determine the proposed project's priority for available funds.

(b) *State Office review*. All applications will be reviewed and scored for funding priority using RUS Bulletin 1778–1. The State Program Official will request funds from the National Office, Attention: Assistant Administrator, Water and Waste, using RUS Bulletins 1778–1 and 1778–2. If an application cannot be funded, the State Program Official will be notified. Eligible applicants that cannot be funded should be advised that funds are not available.

(c) *National Office review*. Each year all funding requests will be reviewed by the National Office starting November 1 and will continue as long as funds are available except for the first year in which funds are made available for this grant program. A review of funding requests the first year will start 30 days after funds are made available. Projects selected for funding will be considered based on the priority criteria and available funds. Projects must compete on a national basis for available funds, and the National Office will allocate funds to State offices on a project by project basis.

(d) *Selection priorities.* The priorities described below will be used by the State Program Official to rate applications and by the Assistant Administrator of Water and Waste to select projects for funding. Points will be distributed as indicated in paragraphs (d)(1) through (d)(5) of this section and will be considered in selecting projects for funding. A copy of RUS Bulletins 1778–1 and 1778–2 used to rate applications, should be placed in the case file for future reference.

(1) *Population.* The proposed project will serve an area with a rural population:

(i) Not in excess of 1,500—30 points.

(ii) More than 1,500 and not in excess of 3,000—20 points.

(iii) More than 3,000 and not in excess of 5,000—15 points.

(2) *Income.* The median household income of population to be served by the proposed project is:

(i) Not in excess of 70% of the statewide nonmetropolitan median household income—30 points.

(ii) More than 70% and not in excess of 80% of the statewide nonmetropolitan median household income—20 points.

(iii) More than 80% and not in excess of 90% of the statewide nonmetropolitan median household income—10 points.

(iv) Over 90% of the statewide nonmetropolitan median household income—0 points.

(3) *Significant decline.* Points will only be assigned for one of the following paragraphs when the primary purpose of the proposed project is to correct a significant decline in the:

(i) Quantity of water available from private individually owned wells or other individual sources of water—30 points; or

(ii) Quantity of water available from an established system's source of water—20 points; or

(iii) Quality of water available from private individually owned wells or other individual sources of water—30 points; or

(iv) Quality of water available from an established system's source of water—20 points.

(4) *Acute shortage.* Grants made in accordance with § 1778.11(b) to assist an established water system remedy an acute shortage of quality water or correct a significant decline in the quantity or quality of water that is available—10 points.

(5) *Discretionary.* In certain cases the Administrator may assign up to 30 points for items such as geographic distribution of funds, rural residents hauling water, severe contamination levels, etc.

§ 1778.8 [Reserved]

§ 1778.9 Uses.

Grant funds may be used for the following purposes:

(a) Waterline extensions from existing systems.

(b) Construction of new waterlines.

(c) Repairs to an existing system.

(d) Significant maintenance to an existing system.

(e) Construction of new wells, reservoirs, transmission lines, treatment plants, and other sources of water.

(f) Equipment replacement.

(g) Connection and/or tap fees.

(h) Pay costs that were incurred within six months of the date an application was filed with the Agency to correct an emergency situation that would have been eligible for funding under this part.

(i) Any other appropriate purpose such as legal fees, engineering fees, recording costs, environmental impact analyses, archaeological surveys, possible salvage or other mitigation measures, planning, establishing or acquiring rights associated with developing sources of, treating, storing, or distributing water.

(j) Assist rural water systems to comply with the requirements of the Federal Water Pollution Control Act (33 U.S.C. 1251 *et seq.*) (FWPCA) or the SDWA when such failure to comply is directly related to a recent decline in quality of potable water. This would not apply to changes in the requirements of FWPCA or SDWA.

§ 1778.10 Restrictions.

(a) Grant funds may not be used to:

(1) Assist any city or town with a population in excess of 10,000 inhabitants according to the most recent decennial census of the United States.

(2) Assist a rural area that has a median household income in excess of the statewide nonmetropolitan median household income according to the most recent decennial census of the United States.

(3) Finance facilities which are not modest in size, design, cost, and are not directly related to correcting the potable water quantity or quality problem.

(4) Pay loan or grant finder's fees.

(5) Pay any annual recurring costs that are considered to be operational expenses.

(6) Pay rental for the use of equipment or machinery owned by the rural community.

(7) Purchase existing systems.

(8) Refinance existing indebtedness, except for short-term debt incurred in accordance with §1778.9(h).

(9) Make reimbursement for projects developed with other grant funds.

(10) Finance facilities that are not for public use.

(b) Nothing in paragraph (a)(1) of this section shall preclude rural areas from submitting joint proposals for assistance under this part. Each entity applying for financial assistance under this part to fund their share of a joint project will be considered individually.

§1778.11 Maximum grants.

(a) Grants made to alleviate a significant decline in quantity or quality of water available from the water supplies in rural areas that occurred within two years of filing an application with the Agency cannot exceed $500,000.

(b) Grants made for repairs, partial replacement, or significant maintenance on an established system to remedy an acute shortage or significant decline in the quality or quantity of potable water cannot exceed $75,000.

(c) Grants under this part, subject to paragraphs (a) and (b) of this section, shall be made for 100 percent of eligible project costs.

§1778.12 [Reserved]

§1778.13 Set-aside.

(a) At least 70 percent of all grants made under these grant programs shall be for projects funded in accordance with §1778.11(a).

(b) At least 50 percent of the funds appropriated for this grant program shall be allocated to rural areas with populations not in excess of 3,000 inhabitants according to the most recent decennial census of the United States.

§1778.14 Other considerations.

(a) *Civil rights compliance requirements.* All grants made under this part are subject to Title VI of the Civil Rights Act of 1964 (42 U.S.C. 2000d *et seq.*), as outlined in subpart E of part 1901 of this title.

(b) *Environmental requirements.* All projects must have appropriate environmental reviews in accordance with RUS requirements.

(c) *Uniform Relocation and Real Property Acquisition Policies Act* (42 U.S.C. 4601 *et seq.*) All projects must comply with the requirements set forth in 7 CFR part 21.

(d) *Flood and mudslide hazard area precautions.* If the project is located in a flood or mudslide area, then flood or mudslide insurance must be provided as required in subpart A of part 1806 of this title (RD Instruction 426.2).

(e) *Governmentwide debarment and suspension* (nonprocurement) and requirements for drug-free work place. All projects must comply with the requirements set forth in the U.S. Department of Agriculture regulations 7 CFR part 3017 and RD Instruction 1940–M.

(f) *Intergovernmental review.* All projects funded under this part are subject to Executive Order 12372 (3 CFR, 1983 Comp., p. 197), which requires intergovernmental consultation with State and local officials. These requirements are set forth in U.S. Department of Agriculture regulations 7 CFR part 3015, subpart V, and RD Instruction 1940–J.

§§1778.15—1778.20 [Reserved]

§1778.21 Application processing.

(a) To the extent possible, an application under this part will be approved or disapproved within 60 days of the date that a complete application and all related material is submitted to the Agency.

(b) The material submitted with the application should include the Preliminary Engineer Report, population and

median household income of the area to be served, description of project, and nature of emergency that caused the problem(s) being addressed by the project. The documentation must clearly show that the applicant has had a significant decline in the quantity and/or quality of potable water or an acute shortage of potable water and the proposed project will eliminate the problem. For projects to be funded in accordance with § 1778.11(a), evidence must be furnished that a significant decline in quantity or quality occurred within two years of filing the application with the Agency.

(c) The processing office should assist the applicant in application assembly and processing.

(d) Appropriate application review and approval procedures outlined in subpart B of part 1780 of this chapter.

(e) Each application for assistance will be carefully reviewed in accordance with the priorities established in § 1778.7. A priority rating will be assigned to each application by the State Program Official.

(f) When the National Office has allocated funds to the State for a project, applicable provisions outlined in subpart B of part 1780 of this chapter will be followed in preparation of the grant docket. This would include development of an operating budget showing that the applicant can meet all its obligations and provide the intended services.

(g) When favorable action will not be taken on an application, the applicant will be notified in writing by the State Program Official of the reasons why the request was not favorably considered. Notification to the applicant will state that a review of this decision by the Agency may be requested by the applicant in accordance with 7 CFR part 11.

(h) State Program Officials are authorized to approve grants made in accordance with this part and RUS Staff Instruction 1780–1.

(i) Funds will be obligated and approval announcement made in accordance with the provisions of subpart B of part 1780 of this chapter.

§ 1778.22 Planning development and procurement.

Planning development and procurement for grants made under this part will be in accordance with subpart C of part 1780 of this chapter. A certification should be obtained from the State agency or the Environmental Protection Agency if the State does not have primacy, stating that the proposed improvements will be in compliance with requirements of the SDWA.

§ 1778.23 Grant closing and disbursement of funds.

(a) Grants will be closed in accordance with § 1780.45 of this chapter.

(b) RUS Bulletin 1780–12, ''Water or Waste Grant Agreement,'' will be executed by all applicants. State Program Officials are authorized to execute the agreement on behalf of the Agency.

(c) The grant will be considered closed on the date RUS Bulletin 1780–12 is signed by the Agency. The Finance Office will be notified of the grant closing date. The Agency will retain the original of the Grant Agreement.

(d) The Agency's policy is not to disburse grant funds from the Treasury until they are actually needed by the applicant. Grant funds will be disbursed by using multiple advances.

§§ 1778.24—1778.30 [Reserved]

§ 1778.31 Performing development.

(a) Applicable provisions of subpart C of part 1780 of this chapter will be followed in performing development for grants made under this part.

(b) After filing an application in accordance with § 1778.21 and when immediate action is necessary, the State Program Official may concur in an applicant's request to proceed with construction before funds are obligated provided the RUS environmental requirements are complied with. The applicant must be advised in writing that:

(1) Any authorization to proceed or any concurrence in bid awards, contract concurrence, or other project development activity, is not a commitment by the Agency to provide grant funds under this part.

(2) The Agency is not liable for any debt incurred by the applicant in the

event that funds are not provided under this part.

§ 1778.32 Grant cancellation.

The State Program Official may prepare and execute Form RD 1940–10, ''Cancellation of U.S. Treasury Check and/or Obligation,'' in accordance with the Forms Manual Insert. If the docket has been forwarded to OGC, that office should receive a copy of Form RD 1940–10. The applicant's attorney and engineer may be provided a copy of Form RD 1940–10. A copy should also be sent to the National Office, Attention: Water and Waste Processing.

§ 1778.33 [Reserved]

§ 1778.34 Grant servicing.

(a) Grants will be serviced in accordance with § 1951.215 of subpart E of part 1951 of this title and subpart O of part 1951 of this title.

(b) The grantee will provide an audit report in accordance with § 1780.47 of this chapter.

§ 1778.35 Subsequent grants.

Subsequent grants will be processed in accordance with the requirements set forth in this part. The initial and subsequent grants made to complete a previously approved project must comply with the maximum grant requirements set forth in § 1778.11.

§ 1778.36 [Reserved]

§ 1778.37 Forms, Instructions and Bulletins.

Bulletins, instructions and forms referenced are for use in administering grants made under this part and are available from any USDA/Rural Development office or the Rural Utilities Service, United States Department of Agriculture, Washington, DC 20250–1500.

§§ 1778.38—1778.99 [Reserved]

§ 1778.100 OMB control number.

The reporting and recordkeeping requirements contained in this part have been approved by the Office of Management and Budget and assigned OMB control number 0575–0074. Public reporting burden for this collection of information is estimated to average two hours per response, including the time for reviewing instructions, searching existing data sources, gathering and maintaining the data needed, and completing and reviewing the collection of information. Send comments regarding this burden estimate or any other aspect of this collection of information, including suggestions for reducing this burden, to Department of Agriculture, Clearance Officer, OIRM, Room 404–W, Washington, DC 20250; and to the Office of Information and Regulatory Affairs, Office of Management and Budget, Washington, DC 20503.

PART 1780—WATER AND WASTE LOANS AND GRANTS

Subpart A—General Policies and Requirements

Sec.
1780.1 General.
1780.2 Purpose.
1780.3 Definitions and grammatical rules of construction.
1780.4 Availability of forms and regulations.
1780.5 [Reserved]
1780.6 Application information.
1780.7 Eligibility.
1780.8 [Reserved]
1780.9 Eligible loan and grant purposes.
1780.10 Limitations.
1780.11 Service area requirements.
1780.12 [Reserved]
1780.13 Rates and terms.
1780.14 Security.
1780.15 Other Federal, State, and local requirements.
1780.16 [Reserved]
1780.17 Selection priorities and process.
1780.18 Allocation of program funds.
1780.19 Public information.
1780.20—1780.23 [Reserved]
1780.24 Approval authorities.
1780.25 Exception authority.
1780.26—1780.30 [Reserved]

Subpart B—Loan and Grant Application Processing

1780.31 General.
1780.32 Timeframes for application processing.
1780.33 Application requirements.
1780.34 [Reserved]
1780.35 Processing office review.
1780.36 Approving official review.
1780.37 Applications determined ineligible.
1780.38 [Reserved]
1780.39 Application processing.
1780.40 [Reserved]
1780.41 Loan or grant approval.

1780.42 Transfer of obligations.
1780.43 [Reserved]
1780.44 Actions prior to loan or grant closing or start of construction, whichever occurs first.
1780.45 Loan and grant closing and delivery of funds.
1780.46 [Reserved]
1780.47 Borrower accounting methods, management reporting and audits.
1780.48 Regional commission grants.
1780.49 Rural or Native Alaskan villages.
1780.50—1780.52 [Reserved]

Subpart C—Planning, Designing, Bidding, Contracting, Constructing and Inspections

1780.53 General.
1780.54 Technical services.
1780.55 Preliminary engineering reports.
1780.56 [Reserved]
1780.57 Design policies.
1780.58—1780.60 [Reserved]
1780.61 Construction contracts.
1780.62 Utility purchase contracts.
1780.63 Sewage treatment and bulk water sales contracts.
1780.64—1780.66 [Reserved]
1780.67 Performing construction.
1780.68 Owner's contractual responsibility.
1780.69 [Reserved]
1780.70 Owner's procurement regulations.
1780.71 [Reserved]
1780.72 Procurement methods.
1780.73 [Reserved]
1780.74 Contracts awarded prior to applications.
1780.75 Contract provisions.
1780.76 Contract administration.
1780.77—1780.79 [Reserved]

Subpart D—Information Pertaining to Preparation of Notes or Bonds and Bond Transcript Documents for Public Body Applicants

1780.80 General.
1780.81 Policies related to use of bond counsel.
1780.82 [Reserved]
1780.83 Bond transcript documents.
1780.84—1780.86 [Reserved]
1780.87 Permanent instruments for Agency loans.
1780.88 [Reserved]
1780.89 Multiple advances of Agency funds using permanent instruments.
1780.90 Multiple advances of Agency funds using temporary debt instruments.
1780.91—1780.93 [Reserved]
1780.94 Minimum bond specifications.
1780.95 Public bidding on bonds.
1780.96—1780.100 [Reserved]

AUTHORITY: 5 U.S.C. 301; 7 U.S.C. 1989; 16 U.S.C. 1005.

SOURCE: 62 FR 33478, June 19, 1997, unless otherwise noted.

Subpart A—General Policies and Requirements

§ 1780.1 General.

(a) This part outlines the policies and procedures for making and processing direct loans and grants for water and waste projects. The Rural Utilities Service (RUS) shall cooperate fully with State and local agencies in making loans and grants to assure maximum support to the State strategy for rural development. Agency officials and their staffs shall maintain coordination and liaison with State agency and substate planning districts.

(b) The income data used in this part to determine median household income must be that which most accurately reflects the income of the service area. The median household income of the service area and the nonmetropolitan median household income of the State will be determined from income data from the most recent decennial census of the United States. If there is reason to believe that the census data is not an accurate representation of the median household income within the area to be served, the reasons will be documented and the applicant may furnish, or the Agency may obtain, additional information regarding such median household income. Information will consist of reliable data from local, regional, State or Federal sources or from a survey conducted by a reliable impartial source. The nonmetropolitan median household income of the State may only be updated on a national basis by the RUS National Office. This will be done only when median household income data for the same year for all Bureau of the Census areas is available from the Bureau of the Census or other reliable sources. Bureau of the Census areas would include areas such as: Counties, County Subdivisions, Cities, Towns, Townships, Boroughs, and other places.

(c) RUS debt instruments will require an agreement that if at any time it shall appear to the Government that the borrower is able to refinance the amount of the indebtedness to the Government then outstanding, in whole or

in part, by obtaining a loan for such purposes from responsible cooperative or private credit sources, at reasonable rates and terms for loans for similar purposes and periods of time, the borrower will, upon request of the Government, apply for and accept such loan in sufficient amount to repay the Government and will take all such actions as may be required in connection with such loan.

(d) Funds allocated for use under this part are also for the use of Indian tribes within the State, regardless of whether State development strategies include Indian reservations within the State's boundaries. Native Americans residing on such reservations must have equal opportunity to participate in the benefits of these programs as compared with other residents of the State. Such tribes might not be subject to State and local laws or jurisdiction. However, any requirements of this part that affect applicant eligibility, the adequacy of RUS's security, or the adequacy of service to users of the facility and all other requirements of this part must be met.

(e) RUS financial programs must be extended without regard to race, color, religion, sex, national origin, marital status, age, or physical or mental handicap.

(f) Any processing or servicing activity conducted pursuant to this part involving authorized assistance to Agency employees, members of their families, known close relatives, or business or close personal associates, is subject to the provisions of subpart D of part 1900 of this title. Applicants for assistance are required to identify any known relationship or association with a RUS employee.

(g) Water and waste facilities will be designed, installed, and operated in accordance with applicable laws which include but are not limited to the Safe Drinking Water Act, Clean Water Act and the Resource Conservation and Recovery Act.

(h) RUS financed facilities will be consistent with any current development plans of State, multijurisdictional areas, counties, or municipalities in which the proposed project is located.

(i) Each RUS financed facility will be in compliance with appropriate State or Federal agency regulations which have control of the appropriation, diversion, storage and use of water and disposal of excess water.

(j) Water and waste applicants must demonstrate that they possess the financial, technical, and managerial capability necessary to consistently comply with pertinent Federal and State laws and requirements. In developing water and waste systems, applicants must consider alternatives of ownership, system design, and the sharing of services.

(k) Applicants should be aware of and comply with other Federal statute requirements including but not limited to:

(1) *Section 504 of the Rehabilitation Act of 1973.* Under section 504 of the Rehabilitation Act of 1973, as amended (29 U.S.C. 794 *et seq.*), no handicapped individual in the United States shall, solely by reason of their handicap, be excluded from participation in, be denied the benefits of, or be subjected to discrimination under any program or activity receiving RUS financial assistance;

(2) *Civil Rights Act of 1964.* All borrowers are subject to, and facilities must be operated in accordance with, title VI of the Civil Rights Act of 1964 (42 U.S.C. 2000d *et seq.*) and subpart E of part 1901 of this title, particularly as it relates to conducting and reporting of compliance reviews. Instruments of conveyance for loans and/or grants subject to the Act must contain the covenant required by § 1901.202(e) of this title;

(3) *The Americans with Disabilities Act (ADA) of 1990.* This Act (42 U.S.C. 12101 *et seq.*) prohibits discrimination on the basis of disability in employment, State and local government services, public transportation, public accommodations, facilities, and telecommunications. Title II of the Act applies to facilities operated by State and local public entities which provides services, programs and activities. Title III of the Act applies to facilities owned, leased, or operated by private entities which accommodate the public; and

(4) *Age Discrimination Act of 1975.* This Act (42 U.S.C. 6101 *et seq.*) provides that no person in the United States shall on the basis of age, be excluded from participation in, be denied the benefits of, or be subjected to discrimination under any program or activity receiving Federal financial assistance.

§ 1780.2 Purpose.

Provide loan and grant funds for water and waste projects serving the most financially needy communities. Financial assistance should result in reasonable user costs for rural residents, rural businesses, and other rural users.

§ 1780.3 Definitions and grammatical rules of construction.

(a) *Definitions.* For the purposes of this part:

Agency means the Rural Utilities Service and any United States Department of Agriculture (USDA) employee acting on behalf of the Rural Utilities Service in accordance with appropriate delegations of authority.

Agency identified target areas means an identified area in the State strategic plan or other plans developed by the Rural Development State Director.

Approval official means the USDA official at the State level who has been delegated the authority to approve loans or grants.

Equivalent Dwelling Unit (EDU) means the level of service provided to a typical rural residential dwelling.

Parity bonds means bonds which have equal standing with other bonds of the same Issuer.

Poverty line means the level of income for a family of four, as defined in section 673(2) of the Community Services Block Grant Act (42 U.S.C. 9902(2)).

Processing office means the office designated by the State program official to accept and process applications for water and waste disposal assistance.

Project means all activity that an applicant is currently undertaking to be financed in whole or part with RUS assistance.

Protective advances are payments made by a lender for items such as insurance or taxes in order to preserve and protect the security or the lien or priority of the lien securing the loan.

Rural and rural areas means any area not in a city or town with a population in excess of 10,000 inhabitants, according to the latest decennial census of the United States.

Rural Development means the mission area of the Under Secretary for Rural Development. Rural Development State and local offices will administer this water and waste program on behalf of the Rural Utilities Service.

RUS means the Rural Utilities Service, an agency of the United States Department of Agriculture established pursuant to section 232 of the Department of Agriculture Reorganization Act of 1994 (Pub. L. 103–354, 108 Stat. 3178), successor to the Farmer's Home Administration and the Rural Development Administration with respect to certain water and waste disposal loan and grant programs.

Service area means the area reasonably expected to be served by the project.

Servicing office means the office designated by the State program official to service water and waste disposal loans and grants.

Similar system cost means the average annual EDU user cost of a system within a community having similar economic conditions and being served by the same type of established system. Similar system cost shall include all charges, taxes, and assessments attributable to the system including debt service, reserves and operation and maintenance costs.

State program official means the USDA official at the State level who has been delegated the responsibility of administering the water and waste disposal programs under this regulation for a particular State or States.

Statewide nonmetropolitan median household income means the median household income of all rural areas of a state.

(b) *Rules of grammatical construction.* Unless the context otherwise indicates, ''includes'' and ''including'' are not limiting, and ''or'' is not exclusive. The terms defined in paragraph (a) of this section include the plural as well as the singular, and the singular as well as the plural.

§1780.4 Availability of forms and regulations.

Information about the availability of forms, instructions, regulations, bulletins, OMB Circulars, Treasury Circulars, standards, documents and publications cited in this part is available from any USDA/Rural Development office or the Rural Utilities Service, United States Department of Agriculture, Washington, DC 20250–1500.

§1780.5 [Reserved]

§1780.6 Application information.

(a) The Rural Development State Director in each State will determine the office and staff that will be responsible for delivery of the program (processing office) and designate an approving office. Applications will be accepted by the processing office.

(b) The applicant's governing body should designate one person to act as contact person with the Agency during loan and grant processing. Agency personnel should make every effort to involve the applicant's contact person when meeting with the applicant's professional consultants or agents.

§1780.7 Eligibility.

Facilities financed by water and waste disposal loans or grants must serve rural areas.

(a) *Eligible applicant.* An applicant must be:

(1) A public body, such as a municipality, county, district, authority, or other political subdivision of a state, territory or commonwealth;

(2) An organization operated on a not-for-profit basis, such as an association, cooperative, or private corporation. The organization must be an association controlled by a local public body or bodies, or have a broadly based ownership by or membership of people of the local community; or

(3) Indian tribes on Federal and State reservations and other Federally recognized Indian tribes.

(b) *Eligible facilities.* Facilities financed by RUS may be located in nonrural areas. However, loan and grant funds may be used to finance only that portion of the facility serving rural areas, regardless of facility location.

(c) *Eligible projects.* (1) Projects must serve a rural area which, if such project is completed, is not likely to decline in population below that for which the project was designed.

(2) Projects must be designed and constructed so that adequate capacity will or can be made available to serve the present population of the area to the extent feasible and to serve the reasonably foreseeable growth needs of the area to the extent practicable.

(3) Projects must be necessary for orderly community development and consistent with a current comprehensive community water, waste disposal, or other current development plan for the rural area.

(d) *Credit elsewhere.* Applicants must certify in writing and the Agency shall determine and document that the applicant is unable to finance the proposed project from their own resources or through commercial credit at reasonable rates and terms.

(e) *Legal authority and responsibility.* Each applicant must have or will obtain the legal authority necessary for owning, constructing, operating, and maintaining the proposed facility or service and for obtaining, giving security for, and repaying the proposed loan. The applicant shall be responsible for operating, maintaining, and managing the facility, and providing for its continued availability and use at reasonable user rates and charges. This responsibility shall be exercised by the applicant even though the facility may be operated, maintained, or managed by a third party under contract or management agreement. Guidance for preparing a management agreement is available from the Agency. Such contracts, management agreements, or leases must not contain options or other provisions for transfer of ownership.

(f) *Economic feasibility.* All projects financed under the provisions of this section must be based on taxes, assessments, income, fees, or other satisfactory sources of revenues in an amount sufficient to provide for facility operation and maintenance, reasonable reserves, and debt payment. If the primary use of the facility is by business and the success or failure of the facility is dependent on the business, then

the economic viability of that business must be assessed.

(g) *Federal Debt Collection Act of 1990 (28 U.S.C. 3001 et seq.).* An outstanding judgment obtained by the United States in a Federal Court (other than in the United States Tax Court), which has been recorded, shall cause the applicant to be ineligible to receive a loan or grant until the judgment is paid in full or otherwise satisfied.

(h) *Expanded eligibility for timber-dependent communities in Pacific Northwest.* In the Pacific Northwest, defined as an area containing national forest covered by the Federal document entitled, ''Forest Plan for a Sustainable Economy and a Sustainable Environment,'' dated July 1, 1993, the population limits contained in § 1780.3(a) are expanded to include communities with not more than 25,000 inhabitants until September 30, 1998, if:

(1) Part or all of the community lies within 100 miles of the boundary of a national forest covered by the Federal document entitled, ''Forest Plan for a Sustainable Economy and a Sustainable Environment,'' dated July 1, 1993; and

(2) The community is located in a county in which at least 15 percent of the total primary and secondary labor and proprietor income is derived from forestry, wood products, or forest-related industries such as recreation and tourism.

§ 1780.8 [Reserved]

§ 1780.9 Eligible loan and grant purposes.

Loan and grant funds may be used only for the following purposes:

(a) To construct, enlarge, extend, or otherwise improve rural water, sanitary sewage, solid waste disposal, and storm wastewater disposal facilities.

(b) To construct or relocate public buildings, roads, bridges, fences, or utilities, and to make other public improvements necessary for the successful operation or protection of facilities authorized in paragraph (a) of this section.

(c) To relocate private buildings, roads, bridges, fences, or utilities, and other private improvements necessary for the successful operation or protection of facilities authorized in paragraph (a) of this section.

(d) For payment of other utility connection charges as provided in service contracts between utility systems.

(e) When a necessary part of the project relates to those facilities authorized in paragraphs (a), (b),(c) or (d) of this section the following may be considered:

(1) Loan or grant funds may be used for:

(i) Reasonable fees and costs such as: legal, engineering, administrative services, fiscal advisory, recording, environmental analyses and surveys, possible salvage or other mitigation measures, planning, establishing or acquiring rights;

(ii) Costs of acquiring interest in land; rights, such as water rights, leases, permits, rights-of-way; and other evidence of land or water control or protection necessary for development of the facility;

(iii) Purchasing or renting equipment necessary to install, operate, maintain, extend, or protect facilities;

(iv) Cost of additional applicant labor and other expenses necessary to install and extend service; and

(v) In unusual cases, the cost for connecting the user to the main service line.

(2) Only loan funds may be used for:

(i) Interest incurred during construction in conjunction with multiple advances or interest on interim financing;

(ii) Initial operating expenses, including interest, for a period ordinarily not exceeding one year when the applicant is unable to pay such expenses;

(iii) The purchase of existing facilities when it is necessary either to improve service or prevent the loss of service;

(iv) Refinancing debts incurred by, or on behalf of, an applicant when all of the following conditions exist:

(A) The debts being refinanced are a secondary part of the total loan;

(B) The debts were incurred for the facility or service being financed or any part thereof; and

(C) Arrangements cannot be made with the creditors to extend or modify the terms of the debts so that a sound basis will exist for making a loan; and

(v) Prepayment of costs for which RUS grant funds were obligated.

(3) Grant funds may be used to restore loan funds used to prepay grant obligated costs.

(f) Construction incurred before loan or grant approval.

(1) Funds may be used to pay obligations for eligible project costs incurred before loan or grant approval if such requests are made in writing by the applicant and the Agency determines that:

(i) Compelling reasons exist for incurring obligations before loan or grant approval;

(ii) The obligations will be incurred for authorized loan or grant purposes; and

(iii) The Agency's authorization to pay such obligations is on the condition that it is not committed to make the loan or grant; it assumes no responsibility for any obligations incurred by the applicant; and the applicant must subsequently meet all loan or grant approval requirements, including environmental and contracting requirements.

(2) If construction is started without Agency approval, post-approval in accordance with this section may be considered, provided the construction meets applicable requirements including those regarding approval and environmental matters.

(g) Water or sewer service may be provided through individual installations or small clusters of users within an applicant's service area. The approval official should consider items such as: quantity and quality of the individual installations that may be developed; cost effectiveness of the individual facility compared with the initial and long term user cost on a central system; health and pollution problems attributable to individual facilities; operational or management problems peculiar to individual installations; and permit and regulatory agency requirements.

(1) Applicants providing service through individual facilities must meet the eligibility requirements in §1780.7.

(2) The Agency must approve the form of agreement between the applicant and individual users for the installation, operation, maintenance and payment for individual facilities.

(3) If taxes or assessments are not pledged as security, applicants providing service through individual facilities must obtain security necessary to assure collection of any sum the individual user is obligated to pay the applicant.

(4) Notes representing indebtedness owed the applicant by a user for an individual facility will be scheduled for payment over a period not to exceed the useful life of the individual facility or the RUS loan, whichever is shorter. The interest rate will not exceed the interest rate charged the applicant on the RUS indebtedness.

(5) Applicants providing service through individual or cluster facilities must obtain:

(i) Easements for the installation and ingress to and egress from the facility if determined necessary by RUS; and

(ii) An adequate method for denying service in the event of nonpayment of user fees.

§1780.10 Limitations.

(a) Loan and grant funds may not be used to finance:

(1) Facilities which are not modest in size, design, and cost;

(2) Loan or grant finder's fees;

(3) The construction of any new combined storm and sanitary sewer facilities;

(4) Any portion of the cost of a facility which does not serve a rural area;

(5) That portion of project costs normally provided by a business or industrial user, such as wastewater pretreatment, etc.;

(6) Rental for the use of equipment or machinery owned by the applicant;

(7) For other purposes not directly related to operating and maintenance of the facility being installed or improved; and

(8) A judgment which would disqualify an applicant for a loan or grant as provided for in §1780.7(g).

(b) Grant funds may not be used to:

(1) Reduce EDU costs to a level less than similar system cost;

(2) Pay any costs of a project when the median household income of the

service area is and more than 100 percent of the nonmetropolitan median household income of the State;

(3) Pay project costs when other loan funding for the project is not at reasonable rates and terms; and

(4) Pay project costs when other funding is a guaranteed loan obtained in accordance with subpart I of part 1980 of this title.

(c) Grants may not be made in excess of the following percentages of the RUS eligible project development costs. Facilities previously installed will not be considered in determining the development costs.

(1) 75 percent when the median household income of the service area is below the higher of the poverty line or 80% of the state nonmetropolitan median income and the project is necessary to alleviate a health or sanitary problem.

(2) 45 percent when the median household income of the service area exceeds the 80 percent requirements described in paragraph (c)(1) of this section but is not more than 100 percent of the statewide nonmetropolitan median household income.

(3) Applicants are advised that the percentages contained in paragraphs (c)(1) and (c)(2) of this section are maximum amounts and may be further limited due to availability of funds or the grant determination procedures contained in § 1780.35 (b).

§ 1780.11 Service area requirements.

(a) All facilities financed under the provisions of this part shall be for public use. The facilities will be installed so as to serve any potential user within the service area who desires service and can be feasibly and legally served. This does not preclude:

(1) Financing or constructing projects in phases when it is not practical to finance or construct the entire project at one time; and

(2) Financing or constructing facilities where it is not economically feasible to serve the entire area, provided economic feasibility is determined on the basis of the entire system and not by considering the cost of separate extensions to or parts thereof; the applicant publicly announces a plan for extending service to areas not initially receiving service from the system; and potential users located in the areas not to be initially served receive written notice from the applicant that service will not be provided until such time as it is economically feasible to do so.

(b) Should the Agency determine that inequities exist within the applicants service area for the same type service proposed (i.e., water or waste disposal) such inequities will be remedied by the applicant prior to loan or grant approval or included as part of the project. Inequities are defined as unjustified variations in availability, adequacy or quality of service. User rate schedules for portions of existing systems that were developed under different financing, rates, terms or conditions do not necessarily constitute inequities.

(c) Developers are normally expected to provide utility-type facilities in new or developing areas in compliance with appropriate State statutes. RUS financing will be considered to an eligible applicant only in such cases when failure to complete development would result in an adverse economic condition for the rural area (not the community being developed); the proposal is necessary to the success of a current area development plan; and loan repayment can be assured by:

(1) The applicant already having sufficient assured revenues to repay the loan; or

(2) Developers providing a bond or escrowed security deposit as a guarantee sufficient to meet expenses attributable to the area in question until a sufficient number of the building sites are occupied and connected to the facility to provide enough revenues to meet operating, maintenance, debt service, and reserve requirements. Such guarantees from developers will meet the requirements in § 1780.39(c)(4)(ii); or

(3) Developers paying cash for the increased capital cost and any increased operating expenses until the developing area will support the increased costs; or

(4) The full faith and credit of a public body where the debt is evidenced by general obligation bonds; or

(5) The loan is to a public body evidenced by a pledge of tax revenue or assessments; or

(6) The user charges can become a lien upon the property being served and income from such lien can be collected in sufficient time to be used for its intended purposes.

§ 1780.12 [Reserved]

§ 1780.13 Rates and terms.

(a) *General.* (1) Each loan will bear interest at the rate prescribed in RD Instruction 440.1, exhibit B. The interest rates will be set by the Agency for each quarter of the fiscal year. All rates will be adjusted to the nearest one-eighth of one per centum. The rate will be the lower of the rate in effect at the time of loan approval or the rate in effect at the time of loan closing unless the applicant otherwise chooses.

(2) If the interest rate is to be that in effect at loan closing on a loan involving multiple advances of RUS funds using temporary debt instruments, the interest rate charged shall be that in effect on the date when the first temporary debt instrument is issued.

(b) *Poverty rate.* The poverty interest rate will not exceed 5 per centum per annum. All poverty rate loans must comply with the following conditions:

(1) The primary purpose of the loan is to upgrade existing facilities or construct new facilities required to meet applicable health or sanitary standards; and

(2) The median household income of the service area is below the higher of the poverty line, or 80 percent of the Statewide nonmetropolitan median household income.

(c) *Intermediate rate.* The intermediate interest rate will be set at the poverty rate plus one-half of the difference between the poverty rate and the market rate, not to exceed 7 percent per annum. It will apply to loans that do not meet the requirements for the poverty rate and for which the median household income of the service area is not more than 100 percent of the nonmetropolitan median household income of the State.

(d) *Market rate.* The market interest rate will be set using as guidance the average of the Bond Buyer (11–GO Bond) Index for the four weeks prior to the first Friday of the last month before the beginning of the quarter. The market rate will apply to all loans that do not qualify for a different rate under paragraph (b) or (c) of this section.

(e) *Repayment terms.* The loan repayment period shall not exceed the useful life of the facility, State statute or 40 years from the date of the note or bond, whichever is less. Where RUS grant funds are used in connection with an RUS loan, the loan will be for the maximum term permitted by this part, State statute, or the useful life of the facility, whichever is less, unless there is an exceptional case where circumstances justify making an RUS loan for less than the maximum term permitted. In such cases, the reasons must be fully documented.

(1) Principal payments may be deferred in whole or in part for a period not to exceed 36 months following the date the first interest installment is due. If for any reason it appears necessary to permit a longer period of deferment, the Agency may authorize such deferment. Deferments of principal will not be used to:

(i) Postpone the levying of taxes or assessments;

(ii) Delay collection of the full rates which the borrower has agreed to charge users for its services as soon as those services become available;

(iii) Create reserves for normal operation and maintenance;

(iv) Make any capital improvements except those approved by the Agency which are determined to be essential to the repayment of the loan or to maintain adequate security; and

(v) Make payment on other debt.

(2) *Payment date.* Loan payments will be scheduled to coincide with income availability and be in accordance with State law. If State law only permits principal plus interest (P&I) type bonds, annual or semiannual payments will be used. Insofar as practical monthly payments will be scheduled one full month following the date of loan closing; or semiannual or annual payments will be scheduled six or twelve full months, respectively, following the date of loan closing or any deferment period. Due dates falling on

the 29th, 30th or 31st day of the month will be avoided.

(3) In all cases, including those in which RUS is jointly financing with another lender, the RUS payments of principal and interest should approximate amortized installments.

§ 1780.14 Security.

Loans will be secured by the best security position practicable in a manner which will adequately protect the interest of RUS during the repayment period of the loan. Specific security requirements for each loan will be included in a letter of conditions.

(a) *Public bodies.* Loans to such borrowers, including Federally recognized Indian tribes as appropriate, will be evidenced by notes, bonds, warrants, or other contractual obligations as may be authorized by relevant laws and by borrower's documents, resolutions, and ordinances. Security, in the following order of preference, will consist of:

(1) The full faith and credit of the borrower when the debt is evidenced by general obligation bonds; and/or

(2) Pledges of taxes or assessments; and/or

(3) Pledges of facility revenue and, when it is the customary financial practice in the State, liens will be taken on the interest of the applicant in all land, easements, rights-of-way, water rights, water purchase contracts, water sales contracts, sewage treatment contracts, and similar property rights, including leasehold interests, used or to be used in connection with the facility whether owned at the time the loan is approved or acquired with loan funds.

(b) *Other-than-public bodies.* Loans to other-than-public body applicants and Federally recognized Indian tribes, as appropriate, will be secured in the following order of preference:

(1) Assignments of borrower income will be taken and perfected by filing, if legally permissible; and

(2) A lien will be taken on the interest of the applicant in all land, easements, rights-of-way, water rights, water purchase contracts, water sales contracts, sewage treatment contracts and similar property rights, including leasehold interest, used, or to be used in connection with the facility whether owned at the time the loan is approved or acquired with loan funds. In unusual circumstances where it is not legally permissible or feasible to obtain a lien on such land (such as land rights obtained from Federal or local government agencies, and from railroads) and the approval official determines that the interest of RUS is otherwise adequately secured, the lien requirement may be omitted as to such land rights. For existing borrowers where the Agency already has a security position on real property, the approval official may determine that the interest of the Government is adequately secured and not require additional liens on such land rights. When the subsequent loan is approved or the acquisition of real property is subject to an outstanding lien indebtedness, the next highest priority lien obtainable will be taken if the approval official determines that the loan is adequately secured.

(c) *Joint financing security.* For projects utilizing joint financing, when adequate security of more than one type is available, the other lender may take one type of security with RUS taking another type. For projects utilizing joint financing with the same security to be shared by RUS and another lender, RUS will obtain at least a parity position with the other lender. A parity position is to ensure that with joint security, in the event of default, each lender will be affected on a proportionate basis. A parity position will conform with the following unless an exception is granted by the approval official:

(1) It is not necessary for loans to have the same repayment terms. Loans made by other lenders involved in joint financing with RUS should be scheduled for repayment on terms similar to those customarily used in the State for financing such facilities.

(2) The use of a trustee or other similar paying agent by the other lender in a joint financing arrangement is acceptable to RUS. A trustee or other similar paying agent will not normally be used for the RUS portion of the funding unless required to comply with

State law. The responsibilities and authorities of any trustee or other similar paying agent on projects that include RUS funds must be clearly specified by written agreement and approved by the State program official and the Office of the General Counsel (OGC). RUS must be able to deal directly with the borrower to enforce the provisions of loan and grant agreements and perform necessary servicing actions.

(3) In the event adequate funds are not available to meet regular installments on parity loans, the funds available will be apportioned to the lenders based on the respective current installments of principal and interest due.

(4) Funds obtained from the sale or liquidation of secured property or fixed assets will be apportioned to the lenders on the basis of the pro rata amount outstanding; provided, however, funds obtained from such sale or liquidation for a project that included RUS grant funds will be apportioned as required by the grant agreement.

(5) Protective advances must be charged to the borrower's account and be secured by a lien on the security property. To the extent consistent with State law and customary lending practices in the area, repayment of protective advances made by either lender, for the mutual protection of both lenders, should receive first priority in apportionment of funds between the lenders. To ensure agreement between lenders, efforts should be made to obtain the concurrence of both lenders before one lender makes a protective advance.

§ 1780.15 Other Federal, State, and local requirements.

Proposals for facilities financed in whole or in part with RUS funds will be coordinated with appropriate Federal, State and local agencies. If there are conflicts between this part and State or local laws or regulatory commission regulations, the provisions of this part will control. Applicants will be required to comply with Federal, State, and local laws and any regulatory commission rules and regulations pertaining to:

(a) Organization of the applicant and its authority to own, construct, operate, and maintain the proposed facilities;

(b) Borrowing money, giving security therefore, and raising revenues for the repayment thereof;

(c) Land use zoning; and

(d) Health and sanitation standards and design and installation standards unless an exception is granted by RUS.

§ 1780.16 [Reserved]

§ 1780.17 Selection priorities and process.

When ranking eligible applications for consideration for limited funds, Agency officials must consider the priority items met by each application and the degree to which those priorities are met. Points will be awarded as follows:

(a) *Population priorities.* (1) The proposed project will primarily serve a rural area having a population not in excess of 1,000—25 points;

(2) The proposed project primarily serves a rural area having a population between 1,001 and 2,500—15 points;

(3) The proposed project primarily serves a rural area having a population between 2,501 and 5,500—5 points.

(b) *Health priorities.* The proposed project is:

(1) Needed to alleviate an emergency situation, correct unanticipated diminution or deterioration of a water supply, or to meet Safe Drinking Water Act requirements which pertain to a water system—25 points;

(2) Required to correct inadequacies of a wastewater disposal system, or to meet health standards which pertain to a wastewater disposal system—25 points;

(3) Required to meet administrative orders issued to correct local, State, or Federal solid waste violations—15 points.

(c) *Median household income priorities.* The median household income of the population to be served by the proposed project is:

(1) Less than the poverty line if the poverty line is less than 80% of the statewide nonmetropolitan median household income—30 points;

(2) Less than 80 percent of the statewide nonmetropolitan median household income—20 points;

(3) Equal to or more than the poverty line and between 80% and 100%, inclusive, of the State's nonmetropolitan median household income—15 points.

(d) *Other priorities.* (1) The proposed project will: merge ownership, management, and operation of smaller facilities providing for more efficient management and economical service—15 points;

(2) The proposed project will enlarge, extend, or otherwise modify existing facilities to provide service to additional rural areas—10 points;

(3) Applicant is a public body or Indian tribe—5 points;

(4) Amount of other than RUS funds committed to the project is:

(i) 50% or more—15 points;

(ii) 20% to 49%—10 points;

(iii) 5%—19%—5 points;

(5) Projects that will serve Agency identified target areas—10 points;

(6) Projects that primarily recycle solid waste products thereby limiting the need for solid waste disposal—5 points;

(7) The proposed project will serve an area that has an unreliable quality or supply of drinking water—10 points.

(e) In certain cases the State program official may assign up to 15 points to a project. The points may be awarded to projects in order to improve compatibility and coordination between RUS's and other agencies' selection systems, to ensure effective RUS fund utilization, and to assist those projects that are the most cost effective. A written justification must be prepared and placed in the project file each time these points are assigned.

(f) *Cost overruns.* An application may receive consideration for funding before others at the State or National Office level when it is a subsequent request for a previously approved project which has encountered construction cost overruns. The cost overruns must be due to high bids or unexpected construction problems that cannot be reduced by negotiations, redesign, use of bid alternatives, rebidding or other means. Cost overruns exceeding 20% of the development cost at time of loan or grant approval or where the scope of the original purpose has changed will not be considered under this paragraph.

(g) *National office priorities.* In selecting projects for funding at the National Office level State program official points may or may not be considered. The Administrator may assign up to 15 additional points to account for items such as geographic distribution of funds, the highest priority projects within a state, and emergency conditions caused by economic problems or natural disasters. The Administrator may delegate the authority to assign the 15 points to appropriate National Office staff.

§ 1780.18 Allocation of program funds.

(a) *General.* (1) The purpose of this part is to set forth the methodology and formulas by which the Administrator of the RUS allocates program funds to the States. (The term ''State'' means any of the States of the United States, the Commonwealth of Puerto Rico, any territory or possession of the United States, or the Western Pacific Areas.)

(2) The formulas in this part are used to allocate program loan and grant funds to Rural Development State offices so that the overall mission of the Agency can be carried out. Considerations used when developing the formulas include enabling legislation, congressional direction, and administration policies. Allocation formulas ensure that program resources are available on an equal basis to all eligible individuals and organizations.

(3) The actual amounts of funds, as computed by the methodology and formulas contained herein, allocated to a State for a funding period, are distributed to each State office. The allocated amounts are available for review in any Rural Development State office.

(b) *Definitions*—(1) *Amount available for allocations.* Funds appropriated or otherwise made available to the Agency for use in authorized programs. On occasion, the allocation of funds to States may not be practical for a particular program due to funding or administrative constraints. In these cases, funds will be controlled by the National Office.

(2) *Basic formula criteria, data source and weight.* Basic formulas are used to calculate a basic State factor as a part of the methodology for allocating funds

to the States. The formulas take a number of criteria that reflect the funding needs for a particular program and through a normalization and weighting process for each of the criteria calculate the basic State factor (SF). The data sources used for each criteria are believed to be the most current and reliable information that adequately quantifies the criterion. The weight, expressed as a percentage, gives a relative value to the importance of each of the criteria.

(3) *Basic formula allocation.* The result of multiplying the amount available for allocation less the total of any amounts held in reserve or distributed by base or administrative allocation times the basic State factor for each State. The basic formula allocation (BFA) for an individual State is equal to:

BFA=(Amount available for allocation − NO reserve − total base and administrative allocations) × SF.

(4) *Transition formula.* (i) A formula based on a proportional amount of previous year allocation used to maintain program continuity by preventing large fluctuations in individual State allocations. The transition formula limits allocation shifts to any particular State in the event of changes from year to year of the basic formula, the basic criteria, or the weights given the criteria. The transition formula first checks whether the current year's basic formula allocation is within the transition range (plus or minus 20 percentage points of the proportional amount of the previous year's BFA). The formula follows:

$$\text{Transition Range} = 1.0 + \frac{\text{maximum } 20\%}{100} \times \frac{(\text{Amount available for allocation this year} \times \text{State previous year BFA})}{(\text{Amount available for allocation previous year})}$$

(ii) If the current year's State BFA is not within the transition range in paragraph (b)(4)(i) of this section, the State formula allocation is changed to the amount of the transition range limit closest to the BFA amount. After having performed this transition adjustment for each State, the sum of the funds allocated to all States will differ from the amount of funds available for BFA. This difference, whether a positive or negative amount, is distributed to all States receiving a formula allocation by multiplying the difference by the SF. The end result is the transition formula allocation. The transition range will not exceed 40% (plus or minus 20%), but when a smaller range is used it will be stated in the individual program section.

(5) *Base allocation.* An amount that may be allocated to each State dependent upon the particular program to provide the opportunity for funding at least one typical loan or grant in each Rural Development State office. The amount of the base allocation may be determined by criteria other than that used in the basic formula allocation such as Agency historic data.

(6) *Administrative allocations.* Allocations made by the Administrator in cases where basic formula criteria information is not available. This form of allocation may be used when the Administrator determines the program objectives cannot be adequately met with a formula allocation.

(7) *Reserve.* An amount retained under the National Office control for each loan and grant program to provide flexibility in meeting situations of unexpected or justifiable need occurring during the fiscal year. The Administrator may make distributions from this reserve to any State when it is determined necessary to meet a program need or Agency objective. The Administrator may retain additional amounts to fund authorized demonstration programs.

(8) *Pooling of funds.* A technique used to ensure that available funds are used in an effective, timely and efficient manner. At the time of pooling those funds within a State's allocation for the fiscal year or portion of the fiscal year, depending on the type of pooling, that have not been obligated by the State are placed in the National Office

reserve. The Administrator will establish the pooling dates for each affected program.

(i) Mid-year: Mid-year pooling occurs near the midpoint of the fiscal year.

(ii) Year-end: Year-end pooling usually occurs near the first of August.

(iii) Emergency: The Administrator may pool funds at any time that it is determined the conditions upon the initial allocation was based have changed to such a degree that it is necessary to pool funds in order to efficiently carry out the Agency mission.

(9) *Availability of the allocation.* Program funds are made available to the Agency on a quarterly basis.

(10) *Suballocation by the Rural Development State Director.* The State Director may be directed or given the option of suballocating the State allocation to processing offices. When suballocating the State Director may retain a portion of the funds in a State office reserve to provide flexibility in situations of unexpected or justified need. When performing a suballocation the State Director will use the same formula, criteria and weights as used by the National Office.

(c) *Water and waste disposal loans and grants*—(1) *Amount available for allocations.* See paragraph (b)(1) of this section.

(2) *Basic formula criteria, data source and weight.* See paragraph (b)(2) of this section.

(i) The criteria used in the basic formula are:

(A) State's percentage of national rural population will be 50 percent.

(B) State's percentage of national rural population with incomes below the poverty level will be 25 percent.

(C) State's percentage of national nonmetropolitan unemployment will be 25 percent.

(ii) Data source for each of these criterion is based on the latest census data available. Each criterion is assigned a specific weight according to its relevance in determining need. The percentage representing each criterion is multiplied by the weight factor and summed to arrive at a State factor (SF). The SF cannot exceed .05, as follows:

SF = (criterion in paragraph (b)(1)(i) of this section × 50 percent) + (criterion in paragraph(b)(1)(ii) of this section × 25 percent) + (criterion in paragraph(b)(1)(iii) of this section × 25 percent)

(3) *Basic formula allocation.* See paragraph (b)(3) of this section. States receiving administrative allocations do not receive formula allocations.

(4) *Transition formula.* See paragraph (b)(4) of this section. The percentage range for the transition formula equals 30 percent (plus or minus 15%).

(5) *Base allocation.* See paragraph (b)(5) of this section. States receiving administrative allocations do not receive base allocations.

(6) *Administrative allocation.* See paragraph (b)(6) of this section. States participating in the formula and base allocation procedures do not receive administrative allocations.

(7) *Reserve.* See paragraph (b)(7) of this section. Any State may request reserve funds by forwarding a request to the National Office. Generally, a request for additional funds will not be honored unless the State has insufficient funds to obligate the loan requested.

(8) *Pooling of funds.* See paragraph (b)(8) of this section. Funds are generally pooled at mid-year and year-end. Pooled funds will be placed in the National Office reserve and will be made available administratively.

(9) *Availability of the allocation.* See paragraph (b)(9) of this section. The allocation of funds is made available for States to obligate on an annual basis although the Office of Management and Budget apportions it to the Agency on a quarterly basis.

(10) *Suballocation by the State Director.* See paragraph (b)(10) of this section. The State Director has the option to suballocate funds to processing offices.

§ 1780.19 Public information.

(a) *Public notice of intent to file an application with the Agency.* Within 60 days of filing an application with the Agency the applicant must publish a notice of intent to apply for a RUS loan or grant. The notice of intent must be published in a newspaper of general circulation in the proposed area to be served.

(b) *General public meeting.* Applicants should inform the general public regarding the development of any proposed project. Any applicant not required to obtain authorization by vote of its membership or by public referendum, to incur the obligations of the proposed loan or grant, must hold at least one public information meeting. The public meeting must be held not later than loan or grant approval. The meeting must give the citizenry an opportunity to become acquainted with the proposed project and to comment on such items as economic and environmental impacts, service area, alternatives to the project, or any other issue identified by Agency. To the extent possible, this meeting should cover items necessary to satisfy all public information meeting requirements for the proposed project. To minimize duplication of public notices and public involvement, the applicant shall, where possible, coordinate and integrate the public involvement activities of the environmental review process into this requirement. The applicant will be required, at least 10 days prior to the meeting, to publish a notice of the meeting in a newspaper of general circulation in the service area, to post a public notice at the applicant's principal office, and to notify the Agency. The applicant will provide the Agency a copy of the published notice and minutes of the public meeting. A public meeting is not normally required for subsequent loans or grants which are needed to complete the financing of a project.

§§ 1780.20—1780.23 [Reserved]

§ 1780.24 Approval authorities.

Appropriate reviews, concurrence, and authorization must be obtained for all loans or grants in excess of the amounts indicated in RUS Staff Instruction 1780–1.

(a) *Redelegation of authority by State Directors.* Unless restricted by memorandum from the RUS Administrator, State Directors can redelegate their approval authorities to State employees by memorandum.

(b) *Restriction of approval authority by the RUS Administrator.* The RUS Administrator can make written restrictions or revocations of the authority given to any approval official.

§ 1780.25 Exception authority.

The Administrator may, in individual cases, make an exception to any requirement or provision of this part which is not inconsistent with the authorizing statute or other applicable law and is determined to be in the Government's interest.

§§ 1780.26—1780.30 [Reserved]

Subpart B—Loan and Grant Application Processing

§ 1780.31 General.

(a) Applicants are encouraged to contact the Agency processing office early in the planning stages of their project. Agency personnel are available to provide general advice and assistance regarding RUS programs, other funding sources, and types of systems or improvements appropriate for the applicants needs. The Agency can also provide access to technical assistance and other information resources for other project development issues such as public information, income surveys, developing rate schedules, system operation and maintenance, and environmental compliance requirements. Throughout the planning, application processing and construction of the project, Agency personnel will work closely and cooperatively with the applicant and their representatives, other State and Federal agencies and technical assistance providers.

(b) The processing office will handle initial inquiries and provide basic information about the program. They are to provide the application, SF 424.2, ''Application for Federal Assistance (For Construction),'' assist applicants as needed in completing SF 424.2, and in filing a request for intergovernmental review. Federally recognized Indian tribes are exempt from intergovernmental review. The processing office will explain eligibility requirements and meet with the applicant whenever necessary to discuss application processing.

(c) Applicants can make a written request for an eligibility determination in lieu of filing an SF 424.2 along with

the information required by § 1780.33. Applicants seeking only an eligibility determination, should contact the processing office to obtain a list of the items needed to make this determination. An eligibility determination for loan or grant assistance will not give an applicant priority for funding as set forth in § 1780.17.

(d) Applications that are not developed in a reasonable period of time taking into account the size and complexity of the proposed project may be removed from the State's active file. Applicants will be consulted prior to taking such action.

(e) Starting with the earliest discussions with prospective applicants or review of applications and continuing throughout application processing, environmental issues must be considered. Throughout the application process the State Environmental Coordinator will discuss with the applicant and their engineer, environmental review requirements for evaluating a project's potential for environment impacts. This should provide flexibility to consider alternatives to the project and develop methods to mitigate identified adverse environmental impacts. The environmental review requirements shall be performed simultaneously and concurrently with the project's engineering design and mitigation measures integrated into the design to minimize any adverse environmental impacts.

§ 1780.32 Timeframes for application processing.

(a) The processing office will determine if the application is properly assembled. If not, the applicant will be notified within fifteen federal working days as to what additional submittal items are needed.

(b) The processing and approval offices will coordinate their reviews to ensure that the applicant is advised about eligibility and anticipated fund availability within 45 days of the receipt of a completed application.

§ 1780.33 Application requirements.

An initial application consists of the following:

(a) One copy of a completed SF 424.2;

(b) A copy of the State intergovernmental comments or one copy of the filed application for State intergovernmental review; and

(c) Two copies of the preliminary engineering report (PER) for the project.

(1) The PER may be submitted to the processing office prior to the rest of the application material if the applicant desires a preliminary review.

(2) The processing office will forward one copy of the PER with comments and recommendations to the State staff engineer for review upon receipt from the applicant.

(3) The State staff will consult with the applicant's engineer as appropriate to resolve any questions concerning the PER and any environmental concerns. Written comments will be provided by the State staff engineer and State Environmental Coordinator to the processing office to meet eligibility determination time lines.

(d) Written certification that other credit is not available.

(e) Supporting documentation necessary to make an eligibility determination such as financial statements, audits, organizational documents, or existing debt instruments. The processing office will advise applicants regarding the required documents. Applicants that are indebted to RUS will not need to submit documents already on file with the processing office.

(f) Form RD 1940–20, ''Request for Environmental Information'' or comparable information. The applicant should consult with the processing office to determine what information should be included with this form.

(g) The applicants Internal Revenue Service Taxpayer Identification Number (TIN). The TIN will be used by the Agency to assign a case number which will be the applicant's or transferee's TIN preceded by State and County Code numbers. Only one case number will be assigned to each applicant regardless of the number of loans or grants or number of separate facilities, unless an exception is authorized by the National Office.

(h) Other Forms and certifications. Applicants will be required to submit the following items to the processing office, upon notification from the processing office to proceed with further development of the full application:

(1) Form RD 442–7, ''Operating Budget'';

(2) Form RD 1910–11, ''Application Certification, Federal Collection Policies for Consumer or Commercial Debts'';

(3) Form RD 400–1, ''Equal Opportunity Agreement'';

(4) Form RD 400–4, ''Assurance Agreement'';

(5) Form AD–1047, ''Certification Regarding Debarment, Suspension and other Responsibility Matters'';

(6) Form AD–1049, Certification regarding Drug-Free Workplace Requirements (Grants) Alternative I For Grantees Other Than Individuals;

(7) Certifications for Contracts, Grants, and Loans (Regarding Lobbying); and

(8) Certification regarding prohibited tying arrangements. Applicants that provide electric service must provide the Agency a certification that they will not require users of a water or waste facility financed under this part to accept electric service as a condition of receiving assistance.

§1780.34 [Reserved]

§1780.35 Processing office review.

Review of the application will usually include the following:

(a) *Nondiscrimination.* Boundaries for the proposed service area must not be chosen in such a way that any user or area will be excluded because of race, color, religion, sex, marital status, age, handicap, or national origin. This does not preclude construction of the project in phases as noted in §1780.11 as long as it is not done in a discriminatory manner.

(b) *Grant determination.* Grants will be determined by the processing office in accordance with the following provisions and will not result in EDU costs below similar system user cost.

(1) *Maximum grant.* Grants may not exceed the percentages in §1780.10(c) of the eligible RUS project development costs listed in §1780.9.

(2) *Debt service.* Applicants will be considered for grant assistance when the debt service portion of the average annual EDU cost, for users in the applicant's service area, exceeds the following percentages of median household income:

(i) 0.5 percent when the median household income of the service area is equal to or below 80% of the statewide nonmetropolitan median income.

(ii) 1.0 percent when the median household income of the service area exceeds the 0.5 percent requirement but is not more than 100 percent the statewide nonmetropolitan household income.

(3) *Similar system cost.* If the grant determined in paragraph (b)(2) of this section results in an annual EDU cost that is not comparable with similar systems, the Agency will determine a grant amount based on achieving EDU costs that are not below similar system user costs.

(4) *Wholesale service.* When an applicant provides wholesale sales or services on a contract basis to another system or entity, similar wholesale system cost will be used in determining the amount of grant needed to achieve a reasonable wholesale user cost.

(5) *Subsidized cost.* When annual cost to the applicant for delivery of service is subsidized by either the state, commonwealth, or territory, and uniform flat user charges regardless of usage are imposed for similar classes of service throughout the service area, the Agency may proceed with a grant in an amount necessary to reduce such delivery cost to a reasonable level.

(c) *User charges.* The user charges should be reasonable and produce enough revenue to provide for all costs of the facility after the project is complete. The planned revenue should be sufficient to provide for all debt service, debt reserve, operation and maintenance and, if appropriate, additional revenue for facility replacement of short lived assets without building a substantial surplus. Ordinarily, the total debt reserve will be equal to one average annual loan installment which will accumulate at the rate of one-tenth of the total each year.

§1780.36 Approving official review.

Projects may be obligated as their applications are completed and approved.

(a) *Selection of applications for further processing.* The application and supporting information submitted will be used to determine the applications selected for further development and funding. After completing the review, the approval official will normally select those eligible applications with the highest priority scores for further processing. When authorizing the development of an application for funding, the following will be considered:

(1) Funds available in State allocation;

(2) Anticipated allocation of funds for the next fiscal year; and

(3) Time necessary for applicant to complete the application.

(b) *Lower scoring projects.* (1) In cases where preliminary cost estimates indicate that an eligible, high scoring application is unfeasible or would require an amount of funding from RUS that exceeds either 25 percent of a State's current annual allocation or an amount greater than that remaining in the State's allocation, the approval official may instead select the next lower scoring application for further processing provided the high scoring applicant is notified of this action and given an opportunity to revise the proposal and resubmit it.

(2) If it is found that there is no effective way to reduce costs or no other funding sources, the approval official, after consultation with applicant, may submit a request for an additional allocation of funds for the proposed project to the National Office. The request should be submitted during the fiscal year in which obligation is anticipated. Such request will be considered along with all others on hand. A written justification must be prepared and placed in the project file.

§ 1780.37 Applications determined ineligible.

If at any time an application is determined ineligible, the processing office will notify the applicant in writing of the reasons. The notification to the applicant will state that an appeal of this decision may be made by the applicant under 7 CFR part 11.

§ 1780.38 [Reserved]

§ 1780.39 Application processing.

(a) *Processing conference.* Before starting to assemble the full application, the applicant should arrange through the processing office an application conference to provide a basis for orderly application assembly. The processing office will explain program requirements, public information requirements and provide guidance on preparation of items necessary for approval.

(b) *Professional services and contracts related to the facility.* Fees provided for in contracts or agreements shall be reasonable. The Agency shall consider fees to be reasonable if they are not in excess of those ordinarily charged by the profession as a whole for similar work when RUS financing is not involved. Applicants will be responsible for providing the services necessary to plan projects including design of facilities, preparation of cost and income estimates, development of proposals for organization and financing, and overall operation and maintenance of the facility. Applicants should negotiate for procurement of professional services, whereby competitors' qualifications are evaluated and the most qualified competitor is selected, subject to negotiations of fair and reasonable compensation. Contracts or other forms of agreement between the applicant and its professional and technical representatives are required and are subject to RUS concurrence.

(1) *Engineering and architectural services.* (i) Applicants shall publicly announce all requirements for engineering and architectural services, and negotiate contracts for engineering and architectural services on the basis of demonstrated competence and qualifications for the type of professional services required and at a fair and reasonable price.

(ii) When project design services are procured separately, the selection of the engineer or architect shall be done by requesting qualification-based proposals and in accordance with this section.

(iii) Applicants may procure engineering and architectural services in

accordance with applicable State statutes or local requirements provided the State Director determines that such procurement meets the intent of this section.

(2) *Other professional services.* Professional services of the following may be necessary: Attorney, bond counsel, accountant, auditor, appraiser, environmental professionals, and financial advisory or fiscal agent (if desired by applicant). Guidance on entering into an agreement for legal services is available from the Agency.

(3) *Bond counsel.* Unless otherwise provided by subpart D of this part, public bodies are required to obtain the service of recognized bond counsel in the preparation of evidence of indebtedness.

(4) *Contracts for other services.* Contracts or other forms of agreements for other services including management, operation, and maintenance will be developed by the applicant and presented to the Agency for review and concurrence. Guidance on entering into a management agreement is available from the Agency.

(c) *User estimates.* Applicants dependent on users fees for debt payment or operation and maintenance expenses shall base their income and expense forecast on realistic user estimates. For users presently not receiving service, consideration must be given to the following:

(1) An estimated number of maximum users should not be used when setting user fees and rates since it may be several years before all residents will need service by the system. In establishing rates a realistic number of users should be employed.

(2) *New user cash contributions.* The amount of cash contributions required will be set by the applicant and concurred in by the approval official. Contributions should be an amount high enough to indicate sincere interest on the part of the potential user, but not so high as to preclude service to low income families. Contributions ordinarily should be an amount approximating one year's minimum user fee, and shall be paid in full before loan closing or commencement of construction, whichever occurs first. Once economic feasibility is ascertained based on a demonstration of potential user cash contributions, the contribution, membership fee or other fees that may be imposed are not a loan requirement under this section. A new user cash contribution is not required when:

(i) The Agency determines that the potential users as a whole in the applicant's service area cannot make cash contributions; or

(ii) State statutes or local ordinances require mandatory use of the system and the applicant or legal entity having such authority agrees in writing to enforce such statutes, or ordinances.

(3) An enforceable user agreement with a penalty clause is required (RUS Bulletin 1780–9 can be used) except:

(i) For users presently receiving service; or

(ii) Where mandatory use of the system is required.

(4) Individual vacant property owners will not be considered when determining project feasibility unless:

(i) The owner has plans to develop the property in a reasonable period of time and become a user of the facility; and

(ii) The owner agrees in writing to make a monthly payment at least equal to the proportionate share of debt service attributable to the vacant property until the property is developed and the facility is utilized on a regular basis. A bond or escrowed security deposit must be provided to guarantee this monthly payment and to guarantee an amount at least equal to the owner's proportionate share of construction costs. If a bond is provided, it must be executed by a surety company that appears on the Treasury Department's most current list (Circular 570, as amended) and be authorized to transact business in the State where the project is located. The guarantee shall be payable jointly to the borrower and the United States of America.

(5) Applicants must provide a positive program to encourage connection by all users as soon as service is available. The program will be available for review and concurrence by the processing office before loan closing or commencement of construction, whichever occurs first. Such a program shall include:

(i) An aggressive information program to be carried out during the construction period. The applicant should send written notification to all signed users in advance of the date service will be available, stating the date users will be expected to have their connections completed, and the date user charges will begin;

(ii) Positive steps to assure that installation services will be available. These may be provided by the contractor installing the system, local plumbing companies, or local contractors;

(iii) Aggressive action to see that all signed users can finance their connections.

(d) *Interim financing.* For all loans exceeding $500,000, where funds can be borrowed at reasonable interest rates on an interim basis from commercial sources for the construction period, such interim financing may be obtained so as to preclude the necessity for multiple advances of RUS loan funds. However, the approval official may make an exception when interim financing is cost prohibitive or unavailable. Guidance on informing the private lender of RUS's commitment is available from the Agency. When interim commercial financing is used, the application will be processed, including obtaining construction bids, to the stage where the RUS loan would normally be closed, that is immediately prior to the start of construction. The RUS loan should be closed as soon as possible after the disbursal of all interim funds.

(e) *Reserve requirements.* Provision for the accumulation of necessary reserves over a reasonable period of time will be included in the loan documents.

(1) *General obligation or special assessment bonds.* Ordinarily, the requirements for reserves will be considered to have been met if general obligation or other bonds which pledge the full faith and credit of the political subdivision are used, or special assessment bonds are used, and if such bonds provide for the annual collection of sufficient taxes or assessments to cover debt service.

(2) *Other than general obligation or special assessment bonds.* Each borrower will be required to establish and maintain reserves sufficient to assure that loan installments will be paid on time, for emergency maintenance, for extensions to facilities, and for replacement of short-lived assets which have a useful life significantly less than the repayment period of the loan. Borrowers issuing bonds or other evidences of debt pledging facility revenues as security will plan their reserve to provide for at least an annual reserve equal to one-tenth of an average annual loan installment each year for the life of the loan unless prohibited by state law.

(f) *Membership authorization.* For organizations other than public bodies, the membership will authorize the project and its financing. Form RD 1942–8, ''Resolution of Members or Stockholders'' may be used for this authorization. The approval official may, with the concurrence of OGC, accept Form RD 1942–9, ''Loan Resolution (Security Agreement)'' without such membership authorization when State statutes and the organization's charter and bylaws do not require such authorization; and:

(1) The organization is well established and is operating with a sound financial base; or

(2) The members of the organization have all signed an enforceable user agreement with a penalty clause and have made the required meaningful user cash contribution.

(g) *Insurance.* The purpose of RUS's insurance requirements is to protect the government's financial interest based on the facility financed with loan funds. It is the responsibility of the applicant and not that of RUS to assure that adequate insurance and fidelity or employee dishonesty bond coverage is maintained. The requirements below apply to all types of coverage determined necessary. The approval official may grant exceptions to normal requirements when appropriate justification is provided establishing that it is in the best interest of the applicant and will not adversely affect the government's interest.

(1) Insurance requirements proposed by the applicant will be accepted if the processing office determines that proposed coverage is adequate to protect the government's financial interest. Applicants are encouraged to have their attorney, consulting engineer,

and/or insurance provider(s) review proposed types and amounts of coverage, including any deductible provisions.

(2) The use of deductibles may be allowed by RUS providing the applicant has financial resources which would likely be adequate to cover potential claims requiring payment of the deductible.

(3) Fidelity or employee dishonesty bonds. Applicants will provide coverage for all persons who have access to funds, including persons working under a contract or management agreement. Coverage may be provided either for all individual positions or persons, or through ''blanket'' coverage providing protection for all appropriate employees. An exception may be granted by the approval official when funds relating to the facility financed are handled by another entity and it is determined that the entity has adequate coverage or the government's interest would otherwise be adequately protected. The amount of coverage required by RUS will normally approximate the total annual debt service requirements for the RUS loans.

(4) Property insurance. Fire and extended coverage will normally be maintained on all structures except as noted below. Ordinarily, RUS should be listed as mortgagee on the policy when RUS has a lien on the property. Normally, major items of equipment or machinery located in the insured structures must also be covered. Exceptions:

(i) Reservoirs, pipelines and other structures if such structures are not normally insured;

(ii) Subsurface lift stations except for the value of electrical and pumping equipment therein.

(5) General liability insurance, including vehicular coverage.

(6) Flood insurance required for facilities located in special flood-and mudslide-prone areas.

(7) Worker's compensation. The borrower will carry worker's compensation insurance for employees in accordance with State laws.

(h) The processing office will conduct appropriate environmental reviews in accordance with RUS requirements.

(i) The processing office will assure that appropriate forms and documents listed in RUS Bulletin 1780–6 are complete. Letters of conditions will not be issued unless funds are available.

§1780.40 [Reserved]

§1780.41 Loan or grant approval.

(a) The processing office will submit the following to the approval official:

(1) Form RD 1942–45, ''Project Summary'';

(2) Form RD 442–7, ''Operating Budget'';

(3) Form RD 442–3, ''Balance Sheet'' or a financial statement or audit that includes a balance sheet;

(4) Form RD 442–14, ''Association Project Fund Analysis'';

(5) ''Letter of Conditions'';

(6) Form RD 1942–46, ''Letter of Intent to Meet Conditions'';

(7) Form RD 1940–1, ''Request for Obligation of Funds'';

(8) Completed environmental review documents including copies of required publication evidence; and

(9) Grant determination, if applicable.

(b) Approval and applicant notification will be accomplished by mailing to the applicant on the obligation date a copy of Form RD 1940–1. The date the applicant is notified is also the date the interest rate at loan approval is established.

§1780.42 Transfer of obligations.

An obligation of funds established for an applicant may be transferred to a different (substituted) applicant provided:

(a) The substituted applicant is eligible and has the authority to receive the assistance approved for the original applicant; and

(b) The need, purpose(s) and scope of the project for which RUS funds will be used remain substantially unchanged.

§1780.43 [Reserved]

§1780.44 Actions prior to loan or grant closing or start of construction, whichever occurs first.

(a) Applicants must provide evidence of adequate insurance and fidelity or employee dishonesty bond coverage.

(b) *Verification of users and other funds.* In connection with a project

that involves new users and will be secured by a pledge of user fees or revenues, the processing office will authenticate the number of users. Ordinarily each signed user agreement will be reviewed and checked for evidence of cash contributions. If during the review any indication is received that all signed users may not connect to the system, there will be such additional investigation made as deemed necessary to determine the number of users who will connect to the system.

(c) *Initial compliance review.* An initial compliance review should be completed under subpart E of part 1901 of this title.

(d) *Applicant contribution.* An applicant contributing funds toward the project cost shall deposit these funds in its project account before start of construction. Project costs paid with applicant funds prior to the required deposit time shall be appropriately accounted for.

(e) *Excess RUS loan and grant funds.* If there is a significant reduction in project cost, the applicant's funding needs will be reassessed. Decreases in RUS funds will be based on revised project costs and current number of users, however, other factors including RUS regulations used at the time of loan or grant approval will remain the same. Obligated loan or grant funds not needed to complete the proposed project will be deobligated. Any reduction will be applied to grant funds first. In such cases, applicable forms, the letter of conditions, and other items will be revised.

(f) *Evidence of and disbursement of other funds.* Applicants expecting funds from other sources for use in completing projects being partially financed with RUS funds will present evidence of the commitment of these funds from such other sources. An agreement should be reached with all funding sources on how funds are to be disbursed before the start of construction. RUS funds will not be used to pre-finance funds committed to the project from other sources.

(g) *Acquisition of land, easements, water rights, and existing facilities.* Applicants are responsible for acquisition of all property rights necessary for the project and will determine that prices paid are reasonable and fair. RUS may require an appraisal by an independent appraiser or Agency employee.

(1) *Rights-of-way and easements.* Applicants will obtain valid, continuous and adequate rights-of-way and easements needed for the construction, operation, and maintenance of the facility.

(i) The applicant must provide a legal opinion relative to the title to rights-of-way and easements. Form RD 442–22, ''Opinion of Counsel Relative to Rights-of-Way,'' may be used. When a site is for major structures such as a reservoir or pumping station and the applicant is able to obtain only a right-of-way or easement on such a site rather than a fee simple title, the applicant will furnish a title report thereon by the applicant's attorney showing ownership of the land and all mortgages or other lien defects, restrictions, or encumbrances, if any.

(ii) For user connections funded by RUS, applicants will obtain adequate rights to construct and maintain the connection line or other facilities located on the user's property. This right may be obtained through formal easement or user agreements.

(2) *Title for land or existing facilities.* Title to land essential to the successful operation of facilities or title to facilities being purchased, must not contain any restrictions that will adversely affect the suitability, successful operation, security value, or transferability of the facility. Preliminary and final title opinions must be provided by the applicant's attorney. The opinions must be in sufficient detail to assess marketability of the property. Form RD 1927–9, ''Preliminary Title Opinion,'' and Form RD 1927–10, ''Final Title Opinion,'' may be used to provide the required title opinions.

(i) In lieu of receiving title opinions from the applicant's attorney, the applicant may use a title insurance company. If a title insurance company is used, the applicant must provide the Agency a title insurance binder, disclosing all title defects or restrictions, and include a commitment to issue a title insurance policy. The policy should be in an amount at least equal to the market value of the property as improved. The title insurance binder and commitment should be provided to

the Agency prior to requesting closing instructions. The Agency will be provided a title insurance policy which will insure RUS's interest in the property without any title defects or restrictions which have not been waived by the Agency.

(ii) The approval official may waive title defects or restrictions, such as utility easements, that do not adversely affect the suitability, successful operation, security value, or transferability of the facility.

(3) *Water rights.* The following will be furnished as applicable:

(i) A statement by the applicant's attorney regarding the nature of the water rights owned or to be acquired by the applicant (such as conveyance of title, appropriation and decree, application and permit, public notice and appropriation and use).

(ii) A copy of a contract with another company or municipality to supply water; or stock certificates in another company which represents the right to receive water.

(4) *Lease agreements.* Where the right of use or control of real property not owned by the applicant is essential to the successful operation of the facility during the life of the loan, such right will be evidenced by written agreements or contracts between the owner of the property and the applicant. Lease agreements shall not contain provisions for restricted use of the site of facility, forfeiture or summary cancellation clauses. Lease agreements shall provide for the right to transfer, encumber, assign and sub-lease without restriction. Lease agreements will ordinarily be written for a term at least equal to the term of the loan. Such lease contracts or agreements will be approved by the approval official with the advice and counsel of OGC, as necessary.

(h) *Obtaining loan closing instructions.* The information required by OGC will be transmitted to OGC with request for closing instructions. Upon receipt of closing instructions, the processing office will discuss with the applicant and its engineer, attorney, and other appropriate representatives, the requirements contained therein and any actions necessary to proceed with closing. State program officials have the option to work with OGC to obtain waivers for closing instructions in certain cases. Closing instructions are not required for grants.

§1780.45 Loan and grant closing and delivery of funds.

(a) *Loan closing.* Notes and bonds will be completed on the date of loan closing except for the entry of subsequent RUS multiple advances where applicable. The amount of each note will be in multiples of not less than $100. The amount of each bond will ordinarily be in multiples of not less than $1,000.

(1) Form RD 440–22, ''Promissory Note (Association or Organization),'' will ordinarily be used for loans to nonpublic bodies.

(2) Forms RD 1942–47, ''Loan Resolution (Public Bodies),'' or RD 1942–9, ''Loan Resolution (Security Agreement)'' will be adopted by public and other-than-public bodies. These resolutions supplement other provisions in this part.

(3) Subpart D of this part contains instructions for preparation of notes and bonds evidencing indebtedness of public bodies.

(b) *Loan disbursement.* (1) Multiple advances. Multiple advances will be used only for loans in excess of $100,000. Advances will be made only as needed to cover disbursements required by the borrower over a 30-day period.

(i) Subpart D of this part contains instructions for making multiple advances to public bodies.

(ii) Advances will be requested by the borrower in writing. The request should be in sufficient amounts to pay cost of construction, rights-of-way and land, legal, engineering, interest, and other expenses as needed. The borrower may use Form RD 440–11, ''Estimate of Funds Needed for 30 Day Period Commencing XXX,'' to show the amount of funds needed during the 30-day period.

(2) RUS loan funds obligated for a specific purpose, such as the paying of interest, but not needed at the time of loan closing will remain in the Finance Office until needed unless State statutes require all funds to be delivered to the borrower at the time of closing. Loan funds may be advanced to prepay costs under §1780.9 (e)(2)(iv). If all funds must be delivered to the borrower at

the time of closing to comply with State statutes, funds not needed at loan closing will be handled as follows:

(i) Deposited in an appropriate borrower account, such as debt service or construction accounts; or

(ii) Deposited in a joint bank account under paragraph (e)(3) of this section.

(c) *Grant closing.* RUS Bulletin 1780–12 ''Water or Waste System Grant Agreement'' of this part will be completed and executed in accordance with the requirements of grant approval. The grant will be considered closed when RUS Bulletin 1780–12 has been properly executed. Processing or approval officials are authorized to sign the grant agreement on behalf of RUS. For grants that supplement RUS loan funds, the grant should be closed simultaneously with the closing of the loan. However, when grant funds will be disbursed before loan closing, as provided in paragraph (d)(1) of this section, the grant will be closed not later than the delivery date of the first advance of grant funds.

(d) *Grant disbursements.* RUS policy is not to disburse grant funds from the Treasury until they are actually needed by the applicant. Applicant funds will be disbursed before the disbursal of any RUS grant funds. RUS loan funds will be disbursed before the disbursal of any RUS grant funds except when:

(1) Interim financing of the total estimated amount of loan funds needed during construction is arranged; and

(2) All interim funds have been disbursed; and

(3) RUS grant funds are needed before the RUS loan can be closed.

(e) *Use and accountability of funds.* (1) Arrangements will be agreed upon for the prior concurrence by the Agency of the bills or vouchers upon which warrants will be drawn. Form RD 402–2, ''Statement of Deposits and Withdrawals,'' or similar form will be used by the Agency to monitor funds. Periodic reviews of these accounts shall be made by the Agency.

(2) *Pledge of collateral for grants to nonprofit organizations.* Grant funds must be deposited in a bank with Federal Deposit Insurance Corporation (FDIC) insurance coverage. Also, if the balance in the account containing grant funds exceeds the FDIC insurance coverage, the excess amount must be collaterally secured. The pledge of collateral for the excess will be in accordance with Treasury Circular 176.

(3) *Joint RUS/borrower bank account.* RUS funds and any funds furnished by the borrower including contributions to purchase major items of equipment, machinery, and furnishings will be deposited in a joint RUS/borrower bank account if determined necessary by the approval official. When RUS has a Memorandum of Understanding with another agency that provides for the use of joint RUS/borrower accounts, or when RUS is the primary source of funds for a project and has determined that the use of a joint RUS/borrower bank account is necessary, project funds from other sources may also be deposited in the joint bank account. RUS shall not be accountable to the source of the other funds nor shall RUS undertake responsibility to administer the funding program of the other entity. Joint RUS/borrower bank accounts should not be used for funds advanced by an interim lender. When funds exceeds the FDIC insurance coverage, the excess must have a pledge of collateral in accordance with Treasury Circular 176.

(4) *Payment for project costs.* Project costs will be monitored by the RUS processing office. Invoices will be approved by the borrower and their engineer, as appropriate, and submitted to the processing office for concurrence. The review and acceptance of project costs, including construction pay estimates, by RUS does not attest to the correctness of the amounts, the quantities shown or that the work has been performed under the terms of the agreements or contracts.

(f) *Use of remaining funds.* Funds remaining after all costs incident to the basic project have been paid or provided for will not include applicant contributions. Funds remaining, may be considered in direct proportion to the amounts obtained from each source. Remaining funds will be handled as follows:

(1) Remaining funds may be used for eligible loan or grant purposes, provided the use will not result in major

changes to the facility(s) and the purpose of the loan and grant remains the same;

(2) RUS loan funds that are not needed will be applied as an extra payment on the RUS indebtedness unless other disposition is required by the bond ordinance, resolution, or State statute; and

(3) Grant funds not expended under paragraph (f)(1) of this section will be canceled. Prior to the actual cancellation, the borrower, its attorney and its engineer will be notified of RUS's intent to cancel the remaining funds. The applicant will be given appropriate appeal rights.

(g) *Post review of loan closing.* In order to determine that the loan has been properly closed the loan docket will be reviewed by OGC. The State program official has the option to consult with OGC to obtain waivers of this review.

§ 1780.46 [Reserved]

§ 1780.47 Borrower accounting methods, management reporting and audits.

(a) Borrowers are required to provide RUS an annual audit or financial statements.

(b) *Method of accounting and preparation of financial statements.* Annual organization-wide financial statements must be prepared on the accrual basis of accounting, in accordance with generally accepted accounting principles (GAAP), unless State statutes or regulatory agencies provide otherwise, or an exception is granted by the Agency. An organization may maintain its accounting records on a basis other than accrual accounting, and make the necessary adjustments so that annual financial statements are presented on the accrual basis.

(c) *Record retention.* Each borrower shall retain all records, books, and supporting material for 3 years after the issuance of the audit or management reports. Upon request, this material will be made available to RUS, Office of the Inspector General (OIG), United States Department of Agriculture (USDA), the Comptroller General, or to their assignees.

(d) *Audits.* All audits are to be performed in accordance with the latest revision of the generally accepted government auditing standards (GAGAS), developed by the Comptroller General of the United States. In addition, the audits are also to be performed in accordance with various Office of Management and Budget (OMB) Circulars. The type of audit each borrower is required to submit will be designated by RUS. Further guidance on preparing an acceptable audit can be obtained from RUS. It is not intended that audits required by this part be separate and apart from audits performed in accordance with State and local laws. To the extent feasible, the audit work should be done in conjunction with those audits. Audits shall be annual unless otherwise prohibited and supplied to the processing office as soon as possible but in no event later than 150 days following the period covered by the audit. OMB Circulars are available in any USDA/RUS office.

(e) *Borrowers exempt from audits.* All borrowers who are exempt from audits, will, within 60 days following the end of each fiscal year, furnish the RUS with annual financial statements, consisting of a verification of the organization's balance sheet and statement of income and expense by an appropriate official of the organization. Forms RD 442–2, ''Statement of Budget, Income and Equity,'' and 442–3 may be used.

(f) *Management reports.* These reports will furnish management with a means of evaluating prior decisions and serve as a basis for planning future operations and financial strategies. In those cases where revenues from multiple sources are pledged as security for an RUS loan, two reports will be required; one for the project being financed by RUS and one combining the entire operation of the borrower. In those cases where RUS loans are secured by general obligation bonds or assessments and the borrower combines revenues from all sources, one management report combining all such revenues is acceptable. The following management data will be submitted by the borrower to the processing office. These reports at a minimum will include a balance sheet and income and expense statement.

(1) *Quarterly reports.* A quarterly management report will be required for the first year for new borrowers and for

all borrowers experiencing financial or management problems for one year from the date problems were noted. If the borrower's account is current at the end of the year, the processing office may waive the required reports.

(2) *Annual management reports.* Prior to the beginning of each fiscal year the following will be submitted to the processing office. (If Form RD 442–2 is used as the annual management report, enter data in column three only of Schedule 1, and complete all of Schedule 2.)

(i) Two copies of the management reports and proposed ''Annual Budget''.

(ii) Financial information may be reported on Form RD 442–2 which includes Schedule 1, ''Statement of Budget, Income and Equity'' and Schedule 2, ''Projected Cash Flow'' or information in similar format.

(iii) A copy of the rate schedule in effect at the time of submission.

(g) *Substitute for management reports.* When RUS loans are secured by the general obligation of the public body or tax assessments which total 100 percent of the debt service requirements, the State program official may authorize an annual audit to substitute for other management reports if the audit is received within 150 days following the period covered by the audit.

§ 1780.48 Regional commission grants.

Grants are sometimes made by regional commissions for projects eligible for RUS assistance. RUS has agreed to administer such funds in a manner similar to administering RUS assistance.

(a) When RUS has funds in the project, no charge will be made for administering regional commission funds.

(b) When RUS has no loan or grant funds in the project, an administrative charge will be made pursuant to the Economy Act of 1932, as amended (31 U.S.C. 1535). A fee of 5 percent of the first $50,000 of a regional commission grant and 1 percent of any amount over $50,000 will be paid RUS by the commission.

(1) *Appalachian Regional Commission (ARC).* RUS Bulletin 1780–23 will be followed in determining the responsibilities of RUS. The ARC Federal Co-chairman and the State program official will provide each other with the necessary notification and certification.

(2) *Other regional commissions.* Title V of the Public Works and Economic Development Act of 1965 (42 U.S.C. 3121 *et seq.*) authorizes other commissions similar to ARC. RUS Bulletin 1780–23 will be used to develop a separate project management agreement between RUS and the commission for each project. The agreement should be prepared by the State program official as soon as notification is received that a commission grant will be made and the amount is confirmed.

(c) Regional commission grants should be obligated as soon as possible in accordance with § 1780.41, except that the announcement procedure referred to in RUS Staff Instruction 1780–2 is not applicable. Regional commission grants will be disbursed from the Finance Office in the same manner as RUS funds.

§ 1780.49 Rural or Native Alaskan villages.

(a) *General.* (1) This section contains regulations for providing grants to remedy the dire sanitation conditions in rural Alaskan villages using funds specifically made available for this purpose.

(2) Unless specifically modified by this section, grants will be made, processed, and serviced in accordance with this subpart.

(b) *Definitions*—(1) *Dire sanitation condition.* For the purpose of this section a dire sanitation condition exists where:

(i) Recurring instances of a waterborne communicable disease have been documented; or

(ii) No community-wide water and sewer system exists and individual residents must haul water to or human waste from their homes and/or use pit privies.

(2) *Rural or Native Alaskan village.* A rural or Native Alaskan community which meets the definition of a village under State statutes and does not have a population in excess of 10,000 inhabitants, according to the latest decennial Census of the United States.

(c) *Eligibility.* (1) The applicant must be a rural or Native Alaskan village.

(2) The median household income of the village cannot exceed 110 percent of the statewide nonmetropolitan household income.

(3) A dire sanitation condition must exist in the village.

(4) The applicant must obtain 50 percent of project development costs from State or local contributions. The local contribution can be from loan funds authorized under this part.

(d) *Grant amount.* Grants will be made for up to 50 percent of the project development costs.

(e) *Use of funds.* Grant funds can be used to pay reasonable costs associated with providing potable water or waste disposal services to residents of rural or Native Alaskan villages.

(f) *Construction.* (1) If the State of Alaska is contributing to the project costs, the project does not have to meet the construction requirements of this subpart.

(2) If a loan is made in accordance with this part for part of the local contribution, all of the requirements of this part apply.

§§1780.50—1780.52 [Reserved]

Subpart C—Planning, Designing, Bidding, Contracting, Constructing and Inspections

§1780.53 General.

This subpart is specifically designed for use by owners including the professional or technical consultants or agents who provide assistance and services such as engineering, environmental, inspection, financial, legal or other services related to planning, designing, bidding, contracting, and constructing water and waste disposal facilities. These procedures do not relieve the owner of the contractual obligations that arise from the procurement of these services. For this subpart, an owner is defined as an applicant, borrower, or grantee.

§1780.54 Technical services.

Owners are responsible for providing the engineering, architect and environmental services necessary for planning, designing, bidding, contracting, inspecting, and constructing their facilities. Services may be provided by the owner's ''in house'' engineer or architect or through contract, subject to Agency concurrence. Engineers and architects must be licensed in the State where the facility is to be constructed.

§1780.55 Preliminary engineering reports.

Preliminary engineering reports (PER)s must conform with customary professional standards. PER guidelines for water, sanitary sewer, solid waste, and storm sewer are available from the Agency.

§1780.56 [Reserved]

§1780.57 Design policies.

Facilities financed by the Agency will be designed and constructed in accordance with sound engineering practices, and must meet the requirements of Federal, State and local agencies.

(a) *Environmental review.* Facilities financed by the Agency must undergo an environmental impact analysis in accordance with RUS requirements. Facility planning and design must not only be responsive to the owner's needs but must consider the environmental impacts of the proposed project. Facility designs shall incorporate and integrate, where practicable, mitigation measures that avoid or minimize adverse environmental impacts. Environmental reviews serve as a means of assessing environmental impacts of project proposals, rather than justifying decisions already made. Applicants may not take any action on a project proposal that will have an adverse environmental impact or limit the choice of reasonable project alternatives being reviewed prior to the completion of the Agency's environmental review.

(b) *Architectural barriers.* All facilities intended for or accessible to the public or in which physically handicapped persons may be employed must be developed in compliance with the Architectural Barriers Act of 1968 (42 U.S.C. 4151 *et seq.*) as implemented by 41 CFR 101–19.6, section 504 of the Rehabilitation Act of 1973 (42 U.S.C 1474 *et seq.*) as implemented by 7 CFR parts 15 and 15b, and Titles II and III of the Americans with Disabilities Act of 1990 (42 U.S.C. 12101 *et seq.*).

(c) *Energy/environment.* Facility design should consider cost effective energy-efficient and environmentally-sound products and services.

(d) *Fire protection.* Water facilities should have sufficient capacity to provide reasonable fire protection to the extent practicable.

(e) *Growth capacity.* Facilities should have sufficient capacity to provide for reasonable growth to the extent practicable.

(f) *Water conservation.* Owners are encouraged, when economically feasible, to incorporate water conservation practices into a facility's design. For existing water systems, evidence must be provided showing that the distribution system water losses do not exceed reasonable levels.

(g) *Conformity with State drinking water standards.* No funds shall be made available under this part for a water system unless the Agency determines that the water system will make significant progress toward meeting the standards established under title XIV of the Public Health Service Act (commonly known as the 'Safe Drinking Water Act') (42 U.S.C. 300f *et seq.*).

(h) *Conformity with Federal and State water pollution control standards.* No funds shall be made available under this part for a water treatment discharge or waste disposal system unless the Agency determines that the effluent from the system conforms with applicable Federal and State water pollution control standards.

(i) *Combined sewers.* New combined sanitary and storm water sewer facilities will not be financed by the Agency. Extensions to existing combined systems can only be financed when separate systems are impractical.

(j) *Dam safety.* Projects involving any artificial barrier which impounds or diverts water, or the rehabilitation or improvement of such a barrier, must comply with the provisions for dam safety as set forth in the Federal Guidelines for Dam Safety (Government Printing Office stock No. 041–001–00187–5, Superintendent of Documents, Attn: New Orders, P.O. Box 371954, Pittsburgh, PA 15250–7954) as prepared by the Federal Coordinating Council for Science, Engineering and Technology.

(k) *Pipe.* All pipe used shall meet current American Society for Testing Materials (ASTM) or American Water Works Association (AWWA) standards.

(l) *Water system testing.* For new water systems or extensions to existing water systems, leakage shall not exceed limits set by either ASTM or AWWA whichever is the more stringent.

(m) *Metering devices.* Water facilities financed by the Agency will have metering devices for each connection. An exception to this requirement may be granted by the State program official when the owner demonstrates that installation of metering devices would be a significant economic detriment and that environmental considerations would not be adversely affected by not installing such devices. Sanitary sewer projects should incorporate water system metering devices whenever practicable.

(n) *Economical service.* The facility's design must provide the most economical service practicable.

§§ 1780.58—1780.60 [Reserved]

§ 1780.61 Construction contracts.

Contract documents must be sufficiently descriptive and legally binding in order to accomplish the work as economically and expeditiously as possible.

(a) *Standard construction contract documents.* If the construction contract documents utilized are not in the format previously approved by the Agency, OGC's review of the construction contract documents will be obtained prior to their use.

(b) *Contract review and concurrence.* The owner's attorney will review the executed contract documents, including performance and payment bonds, and will certify that they are adequate, and that the persons executing these documents have been properly authorized to do so. The contract documents, engineer's recommendation for award, and bid tabulation sheets will be forwarded to the Agency for concurrence prior to awarding the contract. All contracts will contain a provision that they are not effective until they have been concurred in by the Agency. The State program official or designee is

responsible for concurring in construction contracts with the legal advice and guidance of the OGC when necessary.

§ 1780.62 Utility purchase contracts.

Applicants proposing to purchase water or other utility service from private or public sources shall have written contracts for supply or service which are reviewed and concurred in by the Agency. To the extent practical, the Agency review and concurrence of such contracts should take place prior to their execution by the owner. OGC advice and guidance may be requested. Form RD 442–30, ''Water Purchase Contract,'' may be used when appropriate. If the Agency loan will be repaid from system revenues, the contract will be pledged to the Agency as part of the security for the loan. Such contracts will:

(a) Include a commitment by the supplier to furnish, at a specified point, an adequate quantity of water or other service and provide that, in case of shortages, all of the supplier's users will proportionately share shortages.

(b) Set out the ownership and maintenance responsibilities of the respective parties including the master meter if a meter is installed at the point of delivery.

(c) Specify the initial rates and provide a type of escalator clause which will permit rates for the association to be raised or lowered proportionately as certain specified rates for the supplier's regular customers are raised or lowered. Provisions may be made for altering rates in accordance with the decisions of the appropriate State agency which may have regulatory authority.

(d) Cover period of time which is at least equal to the repayment period of the loan. State program officials may approve contracts for shorter periods of time if the supplier cannot legally contract for such period, or if the owner and supplier find it impossible or impractical to negotiate a contract for the maximum period permissible under State law, provided:

(1) The supplier is subject to regulations of the Federal Energy Regulatory Commission or other Federal or State agency whose jurisdiction can be expected to prevent unwarranted curtailment of supply; or

(2) The contract contains adequate provisions for renewal; or

(3) A determination is made that in the event the contract is terminated, there are or will be other adequate sources available to the owner that can feasibly be developed or purchased.

(e) Set out in detail the amount of connection or demand charges, if any, to be made by the supplier as a condition to making the service available to the owner. However, the payment of such charges from loan funds shall not be approved unless the Agency determines that it is more feasible and economical for the owner to pay such a connection charge than it is for the owner to provide the necessary supply by other means.

(f) Provide for a pledge of the contract to the Agency as part of the security for the loan.

(g) Not contain provisions for:

(1) Construction of facilities which will be owned by the supplier. This does not preclude the use of money paid as a connection charge for construction to be done by the supplier.

(2) Options for the future sale or transfer. This does not preclude an agreement recognizing that the supplier and owner may at some future date agree to a sale of all or a portion of the facility.

(h) If it is impossible to obtain a firm commitment for either an adequate quantity or sharing shortages proportionately, a contract may be executed and concurred in provided adequate evidence is furnished to enable the Agency to make a determination that the supplier has adequate supply and/or treatment facilities to furnish its other users and the applicant for the foreseeable future; and:

(1) The supplier is subject to regulations of the Federal Energy Regulatory Commission or other Federal or State agency whose jurisdiction can be expected to prevent unwarranted curtailment of supply; or

(2) A suitable alternative supply could be arranged within the repayment ability of the borrower if it should become necessary; or

(3) Concurrence in the proposed contract is obtained from the National Office.

§ 1780.63 Sewage treatment and bulk water sales contracts.

Owners entering into agreements with private or public parties to treat sewage or supply bulk water shall have written contracts for such service and all such contracts shall be subject to the Agency concurrence. Section 1780.62 should be used as a guide to prepare such contracts.

§§ 1780.64—1780.66 [Reserved]

§ 1780.67 Performing construction.

Owners are encouraged to accomplish construction through contracts with qualified contractors. Owners may accomplish construction by using their own personnel and equipment provided the owners possess the necessary skills, abilities and resources to perform the work and provided a licensed engineer prepares design drawings and specifications and inspects construction and furnishes inspection reports as required by § 1780.76. Inspection services may be provided by individuals as approved by the State staff engineer. Payments for construction will be handled under § 1780.76(e).

§ 1780.68 Owner's contractual responsibility.

This part does not relieve the owner of any responsibilities under its contract. The owner is responsible for the settlement of all contractual and administrative issues arising out of procurement entered into in support of a loan or grant. These include, but are not limited to: source evaluation, protests, disputes, and claims. Matters concerning violation of laws are to be referred to the applicable local, State, or Federal authority.

§ 1780.69 [Reserved]

§ 1780.70 Owner's procurement regulations.

Owner's procurement requirements must comply with the following standards:

(a) *Code of conduct.* Owners shall maintain a written code or standards of conduct which shall govern the performance of their officers, employees or agents engaged in the award and administration of contracts supported by Agency funds. No employee, officer or agent of the owner shall participate in the selection, award, or administration of a contract supported by Agency funds if a conflict of interest, real or apparent, would be involved. Examples of such conflicts would arise when: the employee, officer or agent; any member of their immediate family; their partner; or an organization which employs, or is about to employ, any of the above; has a financial or other interest in the firm selected for the award.

(1) The owner's officers, employees or agents shall neither solicit nor accept gratuities, favors or anything of monetary value from contractors, potential contractors, or parties to subagreements.

(2) To the extent permitted by State or local law or regulations, the owner's standards of conduct shall provide for penalties, sanctions, or other disciplinary actions for violations of such standards by the owner's officers, employees, agents, or by contractors or their agents.

(b) *Maximum open and free competition.* All procurement transactions, regardless of whether by sealed bids or by negotiation and without regard to dollar value, shall be conducted in a manner that provides maximum open and free competition. Procurement procedures shall not restrict or eliminate competition. Examples of what are considered to be restrictive of competition include, but are not limited to: placing unreasonable requirements on firms in order for them to qualify to do business; noncompetitive practices between firms; organizational conflicts of interest; and unnecessary experience and bonding requirements. In specifying materials, the owner and its consultant will consider all materials normally suitable for the project commensurate with sound engineering practices and project requirements. The Agency shall consider fully any recommendation made by the owner concerning the technical design and choice of materials to be used for a facility. If the Agency determines that a design or material, other than those that were recommended should be considered by

including them in the procurement process as an acceptable design or material in the water or waste disposal facility, the Agency shall provide such owner with a comprehensive justification for such a determination. The justification will be documented in writing.

(c) *Owner's review.* Proposed procurement actions shall be reviewed by the owner's officials to avoid the purchase of unnecessary or duplicate items. Consideration should be given to consolidation or separation of procurement items to obtain a more economical purchase. Where appropriate, an analysis shall be made of lease versus purchase alternatives, and any other appropriate analysis to determine which approach would be the most economical. To foster greater economy and efficiency, owners are encouraged to enter into State and local intergovernmental agreements for procurement or use of common goods and services.

(d) Solicitation of offers, whether by competitive sealed bid or competitive negotiation, shall:

(1) Incorporate a clear and accurate description of the technical requirements for the material, product or service to be procured. When it is impractical or uneconomical to make a clear and accurate description of the technical requirements, a ''brand name or equal'' description may be used to define the performance or other salient requirements of a procurement. The specific feature of the name brands which must be met by the offeror shall be clearly stated; and

(2) Clearly specify all requirements which offerors must fulfill and all other factors to be used in evaluating bids or proposals.

(e) Affirmative steps should be taken to assure that small, minority, and women businesses are utilized when possible as sources of supplies, equipment, construction and services.

(f) *Contract pricing.* Cost plus a percentage of cost method of contracting shall not be used.

(g) *Unacceptable bidders.* The following will not be allowed to bid on, or negotiate for, a contract or subcontract related to the construction of the project:

(1) An engineer as an individual or firm who has prepared plans and specifications or who will be responsible for monitoring the construction;

(2) Any firm or corporation in which the owner's engineer is an officer, employee, or holds or controls a substantial interest;

(3) The governing body's officers, employees, or agents;

(4) Any member of the immediate family or partners in the entities referred to in paragraphs (g)(1), (g)(2) or (g)(3) of this section; or

(5) An organization which employs, or is about to employ, any person in the entities referred to in paragraphs (g)(1), (g)(2), (g)(3) or (g)(4) of this section.

(h) *Contract award.* Contracts shall be made only with responsible parties possessing the potential ability to perform successfully under the terms and conditions of a proposed procurement. Consideration shall include but not be limited to matters such as integrity, record of past performance, financial and technical resources, and accessibility to other necessary resources. Contracts shall not be made with parties who are suspended or debarred by any Agency of the United States Government.

§ 1780.71 [Reserved]

§ 1780.72 Procurement methods.

Procurement shall be made by one of the following methods: Small purchase procedures; competitive sealed bids (formal advertising); competitive negotiation; or noncompetitive negotiation. Competitive sealed bids (formal advertising) is the preferred procurement method for construction contracts.

(a) *Small purchase procedures.* Small purchase procedures are those relatively simple and informal procurement methods that are sound and appropriate for a procurement of services, supplies or other property, costing in the aggregate not more than $100,000. If small purchase procedures are used for a procurement, written price or rate quotations shall be requested from at least three qualified sources.

(b) *Competitive sealed bids.* In competitive sealed bids (formal advertising), an invitation for sealed bids is publicly

advertised and a firm-fixed-price contract (lump sum or unit price) is awarded to the responsible bidder whose bid, conforming with all the material terms and conditions of the invitation for bids, is lowest, price and other factors considered. When using this method the following shall apply:

(1) The invitation for bids shall be publicly advertised at a sufficient time prior to the date set for opening of bids. The invitation shall comply with the requirements in § 1780.70(d). Bids shall be solicited from an adequate number of qualified sources;

(2) All bids shall be opened publicly at the time and place stated in the invitation for bids;

(3) A firm-fixed-price contract award shall be made by written notice to that responsible bidder whose bid, conforming to the invitation for bids, is lowest. When specified in the bidding documents, factors such as discounts and transportation costs shall be considered in determining which bid is lowest; and

(4) Any or all bids may be rejected by the owner when it is in its best interest.

(c) *Competitive negotiation.* In competitive negotiations, proposals are requested from a number of sources and the Request for Proposal is publicized. Negotiations are normally conducted with more than one of the sources submitting offers. Competitive negotiation may be used if conditions are not appropriate for the use of formal advertising and where discussions and bargaining with a view to reaching agreement on the technical quality, price, other terms of the proposed contract and specifications may be necessary. If competitive negotiation is used for a procurement, the following requirements shall apply:

(1) Proposals shall be solicited from an adequate number of qualified sources to permit reasonable competition consistent with the nature and requirements of the Procurement. The Request for Proposal shall be publicized and reasonable requests by other sources to compete shall be honored to the maximum extent practicable;

(2) The Request for Proposal shall identify all significant evaluation factors and their relative importance;

(3) The owner shall provide mechanisms for technical evaluation of the proposals received, determination of responsible offerors for the purpose of written or oral discussions, and selection for contract award; and

(4) Award may be made to the responsible offeror whose proposal will be most advantageous to the owner. Unsuccessful offerors should be promptly notified.

(d) *Noncompetitive negotiation.* Noncompetitive negotiation is procurement through solicitation of a proposal from only one source, or after solicitation of a number of sources, competition is determined inadequate. Noncompetitive negotiation may be used when the award of a contract is not feasible under small purchase or competitive sealed bids. Circumstances under which a contract may be awarded by noncompetitive negotiations are limited to the following:

(1) The item is available only from a single source; or

(2) There exists a public exigency or emergency and the urgency for the requirement will not permit a delay incident to competitive solicitation; or

(3) After solicitation of a number of sources, competition is determined inadequate; or

(4) No acceptable bids have been received after formal advertising; or

(5) The procurement is for professional services; or

(6) The aggregate amount does not exceed $100,000.

§ 1780.73 [Reserved]

§ 1780.74 Contracts awarded prior to applications.

Owners awarding construction or other procurement contracts prior to filing an application, must provide evidence that is satisfactory to the Agency that the contract was entered into without intent to circumvent the requirements of Agency regulations.

(a) *Modifications.* The contract shall be modified to conform with the provisions of this part. Where this is not possible, modifications will be made to the extent practicable and, as a minimum, the contract must comply with

all State and local laws and regulations as well as statutory requirements and executive orders related to the Agency financing. When all construction is complete and it is impracticable to modify the contracts, the owner must provide the certification required by paragraph (c) of this section.

(b) *Consultant's certification.* Provide a certification by an engineer, licensed in the State where the facility is constructed, that any construction performed complies fully with the plans and specifications.

(c) *Owner's certification.* Provide a certification by the owner that the contractor has complied with applicable statutory and executive requirements related to Agency financing for construction already performed.

§ 1780.75 Contract provisions.

In addition to provisions required for a valid and legally binding contract, any recipient of Agency funds shall include the following contract provisions in all contracts.

(a) *Remedies.* Contracts other than small purchases shall contain provisions or conditions which will allow for administrative, contractual, or legal remedies in instances where contractors violate or breach contract terms, and provide for such sanctions and penalties as may be appropriate. A realistic liquidated damage provision should be included in all contracts for construction.

(b) *Termination.* All contracts exceeding $10,000, shall contain suitable provisions for termination by the owner including the manner by which it will be effected and the basis for settlement. In addition, such contracts shall describe conditions under which the contract may be terminated for default as well as conditions where the contract may be terminated because of circumstances beyond the control of the contractor.

(c) *Surety.* In all contracts for construction or facility improvements exceeding $100,000, the owner shall require bonds or cash deposit in escrow assuring performance and payment each in the amount of 100 percent of the contract cost. The surety will be in the form of performance bonds and payment bonds. For contracts of lesser amounts, the owner may require surety. When a surety is not provided, contractors will furnish evidence of payment in full for all materials, labor, and any other items procured under the contract. Form RD 1924–10, ''Release by Claimants,'' and Form RD 1924–9, ''Certificate of Contractor's Release,'' may be used for this purpose. Companies providing performance bonds and payment bonds must hold a certificate of authority as an acceptable surety on Federal bonds as listed in Treasury Circular 570 as amended and the surety must be listed as having a license to do business in the State where the facility is located.

(d) *Equal employment opportunity.* All contracts awarded in excess of $10,000 by owners shall contain a provision requiring compliance with Executive Order 11246 (3 CFR, 1966 Comp., p.339), entitled, ''Equal Employment Opportunity,'' as amended by Executive Order 11375 (3 CFR, 1968 Comp., p. 321), and as supplemented by Department of Labor regulations 41 CFR chapter 60.

(e) *Anti-kickback.* All contracts for construction shall include a provision for compliance with the Copeland ''Anti-Kickback'' Act (18 U.S.C. 874). This Act provides that each contractor shall be prohibited from inducing, by any means, any person employed in the construction, completion, or repair of public work, to give up any part of the compensation to which they are otherwise entitled. The owner shall report suspected or reported violations to the Agency.

(f) *Records.* All negotiated contracts (except those of $10,000 or less) awarded by owners shall include a provision to the effect that the owner, the Agency, the Comptroller General of the United States, or any of their duly authorized representatives, shall have access to any books, documents, papers, and records of the contractor which are directly pertinent to a specific Federal loan or grant program for the purpose of making audits, examinations, excerpts, and transcriptions. Owners shall require contractors to maintain all required records for 3 years after making final payment and all other pending matters are closed.

(g) *State energy conservation plan.* Contracts shall incorporate mandatory

standards and policies relating to energy efficiency which are contained in the State energy conservation plan issued in compliance with the Energy Policy and Conservation Act (42 U.S.C. 6201).

(h) *Change orders.* The construction contract shall require that all contract change orders be concurred in by the Agency.

(i) *Agency concurrence.* All contracts must contain a provision that they shall not be effective unless and until the State program official or designee concurs in writing.

(j) *Retainage.* All construction contracts shall contain adequate provisions for retainage. No payments will be made that would deplete the retainage nor place in escrow any funds that are required for retainage nor invest the retainage for the benefit of the contractor. The retainage shall not be less than an amount equal to 5 percent of an approved partial payment estimate until the project is substantially complete and accepted by the owner, consulting engineer and Agency. The contract must provide that additional amounts may be retained if the job is not proceeding satisfactorily.

(k) *Other compliance requirements.* Contracts in excess of $100,000 shall contain a provision which requires compliance with all applicable standards, orders, or requirements issued under section 306 of the Clean Air Act (42 U.S.C. 1857(h)), section 508 of the Clean Water Act (33 U.S.C. 1368), Executive Order 11738 (3 CFR, 1974 Comp., p.209), and Environmental Protection Agency (EPA) regulations 40 CFR part 15, which prohibit the use under nonexempt Federal contracts, grants or loans of facilities included on the EPA List of Violating Facilities. The provision shall require reporting of violations to the Agency and to the U.S. Environmental Protection Agency, Assistant Administrator for Enforcement. Solicitations and contract provisions shall include the requirements of 4 CFR 15.4(c) as set forth in RUS Bulletin 1780–14.

§ 1780.76 Contract administration.

Owners shall be responsible for maintaining a contract administration system to monitor the contractors' performance and compliance with the terms, conditions, and specifications of the contracts.

(a) *Preconstruction conference.* Prior to beginning construction, the owner will schedule a preconstruction conference where the consulting engineer will review the planned development with the Agency, owner, resident inspector, attorney, contractor, and other interested parties. The conference will thoroughly cover applicable items included in Form RD 1924–16, ''Record of Pre-construction Conference,'' and the discussions and agreements will be documented.

(b) *Monitoring reports.* The owner is required to monitor construction and provide a report to the Agency giving a full explanation under the following circumstances:

(1) Reasons why approved construction schedules were not met;

(2) Analysis and explanation of cost overruns and how payment is to be made for the same; and

(3) If events occur which have a significant impact upon the project.

(c) *Inspection.* Full-time resident inspection is required for all construction unless a written exception is made by the Agency upon written request of the owner. Unless otherwise agreed, the resident inspector will be provided by the consulting engineer. Prior to the preconstruction conference, the consulting engineer will submit a resume of qualifications of the resident inspector to the owner and to the Agency for acceptance in writing. If the owner provides the resident inspector, it must submit a resume of the inspector's qualifications to the project engineer for comments and the Agency for acceptance in writing prior to the preconstruction conference. The resident inspector will work under the technical supervision of the project engineer and the role and responsibilities will be defined in writing.

(d) *Inspector's daily diary.* The resident inspector will maintain a record of the daily construction progress in the form of a daily diary and daily inspection reports. The daily entries shall be made available to the Agency personnel and will be reviewed during project inspections. The original complete set will be furnished to the owner

upon completion of construction. RUS Bulletin 1780–18 is available from the Agency for preparing daily inspection reports or the reports can be provided in other formats approved by the State staff engineer.

(e) *Payment for Construction.* Form RD 1924–18, ''Partial Payment Estimate,'' or other similar form may be used for construction payments. If Form 1924–18 is not used, prior concurrence by the State staff engineer must be obtained.

(1) Payment of contract retainage will not be made until such retainage is due and payable under the terms of the contact.

(2) Invoices for the payment of construction costs must be approved by the owner, project engineer and concurred in by the Agency.

(3) The review and acceptance of project costs, including construction payment estimates by the Agency shall not attest to the correctness of the amounts, the quantities shown, or that the work has been performed under the terms of agreements or contracts.

(f) *Prefinal inspections.* A prefinal inspection will be made by the owner, resident inspector, project engineer, contractor, representatives of other agencies involved, and Agency representative (preferably the State staff engineer or designee). The inspection results will be recorded by the project engineer and a copy provided to all interested parties.

(g) *Final inspection.* A final inspection will be made by the Agency before final payment is made.

(h) *Changes in development plans.* (1) Changes in development plans shall be reviewed and approved by the Agency provided:

(i) Funds are available to cover any additional costs; and

(ii) The change is for an authorized loan or grant purpose; and

(iii) It will not adversely affect the soundness of the facility operation or the Agency's security; and

(iv) The change is within the scope of the contract,

(2) Changes will be recorded on Form RD 1924–7, ''Contract Change Order,'' or other similar form if approved by the State program official or designee. Regardless of the form, change orders must be approved by the State program official or designee.

(3) Changes should be accomplished only after Agency approval and shall be authorized only by means of contract change order. The change order will include items such as:

(i) Any changes in labor and material;

(ii) Changes in facility design;

(iii) Any decrease or increase in quantities based on final measurements that are different from those shown in the bidding schedule; and

(iv) Any increase or decrease in the time to complete the project.

(4) All changes shall be recorded on chronologically numbered contract change orders as they occur. Change orders will not be included in payment estimates until approved by all parties.

§§ 1780.77—1780.79 [Reserved]

Subpart D—Information Pertaining to Preparation of Notes or Bonds and Bond Transcript Documents for Public Body Applicants

§1780.80 General.

This subpart includes information for use by public body applicants in the preparation and issuance of evidence of debt (bonds, notes, or debt instruments, referred to as bonds in this subpart) and other necessary loan documents.

§1780.81 Policies related to use of bond counsel.

The applicant is responsible for preparation of bonds and bond transcript documents. The applicant will obtain the services and opinion of recognized bond counsel experienced in municipal financing with respect to the validity of a bond issue, except for issues of $100,000 or less. With prior approval of the approval official, the applicant may elect not to use bond counsel. Such issues will be closed in accordance with the following:

(a) The applicant must recognize and accept the fact that application processing may require additional legal and administrative time;

(b) It must be established that not using bond counsel will produce significant savings in total legal costs;

(c) The local attorney must be able and experienced in handling this type of legal work;

(d) The applicant must understand that it will likely have to obtain an opinion from bond counsel at its expense should the Agency require refinancing of the debt;

(e) Bonds will be prepared in accordance with this regulation and conform as closely as possible to the preferred methods of preparation stated in § 1780.94; and

(f) Closing instructions must be issued by OGC.

§ 1780.82 [Reserved]

§ 1780.83 Bond transcript documents.

Any questions relating to Agency requirements should be discussed with Agency representatives. Bond counsel or local counsel, as appropriate, must furnish at least two complete sets of the following to the applicant, who will furnish one complete set to the Agency:

(a) Copies of all organizational documents;

(b) Copies of general incumbency certificate;

(c) Certified copies of minutes or excerpts from all meetings of the governing body at which action was taken in connection with the authorizing and issuing of the bonds;

(d) Certified copies of documents evidencing that the applicant has complied fully with all statutory requirements incident to calling and holding a favorable bond election, if one is necessary;

(e) Certified copies of the resolutions, ordinances, or other documents such as the bond authorizing resolutions or ordinances and any resolution establishing rates and regulating use of facility, if such documents are not included in the minutes furnished;

(f) Copies of the official Notice of Sale and the affidavit of publication of the Notice of Sale when State statute requires a public sale;

(g) Specimen bond, with any attached coupons;

(h) Attorney's no-litigation certificate;

(i) Certified copies of resolutions or other documents pertaining to the bond award;

(j) Any additional or supporting documents required by bond counsel;

(k) For loans involving multiple advances of Agency loan funds, a preliminary approving opinion of bond counsel (or local counsel if no bond counsel is involved) if a final unqualified opinion cannot be obtained until all funds are advanced. The preliminary opinion for the entire issue shall be delivered at or before the time of the first advance of funds. It will state that the applicant has the legal authority to issue the bonds, construct, operate and maintain the facility, and repay the loan, subject only to changes occurring during the advance of funds, such as litigation resulting from the failure to advance loan funds, and receipt of closing certificates;

(l) Final unqualified approving opinion of bond counsel, (and preliminary approving opinion, if required) or local counsel if no bond counsel is involved, including an opinion as to whether interest on bonds will be exempt from Federal and State income taxes. With approval of the State program official, a final opinion may be qualified to the extent that litigation is pending relating to Indian claims that may affect title to land or validity of the obligation. It is permissible for such opinion to contain language referring to the last sentence of section 306 (a)(1) or to section 309A (h) of the Consolidated Farm and Rural Development Act (7 U.S.C. 1926 (a)(1) or 1929a (h)).

§§ 1780.84—1780.86 [Reserved]

§ 1780.87 Permanent instruments for Agency loans.

Agency loans will be evidenced by an instrument determined legally sufficient and in accordance with the following order of preference:

(a) *First preference—Form RD 440–22, ''Promissory Note''.* Refer to paragraph (b) of this section for methods of various frequency payment calculations.

(b) *Second preference—single instruments with amortized installments.* A single instrument providing for amortized

installments which follows Form RD 440–22 as closely as possible. The full amount of the loan must show on the face of the instrument, and there must be provisions for entering the date and amount of each advance on the reverse or an attachment. When principal payments are deferred, the instrument will show that ''interest only'' is due on interest-only installment dates, rather than specific dollar amounts. The payment period including the ''interest only'' installment cannot exceed 40 years, the useful life of the facility, or State statute limitations, whichever occurs first. The amortized installment, computed as follows, will be shown as due on installment dates thereafter.

(1) *Monthly payments.* Multiply by twelve the number of years between the due date of the last interest-only installment and the final installment to determine the number of monthly payments. When there are no interest-only installments, multiply by twelve the number of years over which the loan is amortized. Then multiply the loan amount by the amortization factor and round to the next higher dollar.

(2) *Semiannual payments.* Multiply by two the number of years between the due date of the last interest-only installment and the due date of the final installment to determine the correct number of semiannual periods. When there are no interest-only installments, multiply by two the number of years over which the loan is amortized. Then multiply the loan amount by the applicable amortization factor.

(3) *Annual payments.* Subtract the due date of the last interest-only installment from the due date of the final installment to determine the number of annual payments. When there are no interest-only installments, the number of annual payments will equal the number of years over which the loan is amortized. Then multiply the loan amount by the applicable amortization factor and round to the next higher dollar.

(c) *Third preference—single instruments with installments of principal plus interest.* If a single instrument with amortized installments is not legally permissible, use a single instrument providing for installments of principal plus interest accrued on the principal balance. For bonds with semiannual interest and annual principal, the interest is calculated by multiplying the principal balance times the interest rate and dividing this figure by two. Principal installments are to be scheduled so that total combined interest and principal payments closely approximate amortized payments.

(1) The repayment terms concerning interest only installments described in paragraph (b) of this section apply.

(2) The instrument shall contain in substance provisions indicating:

(i) Principal maturities and due dates;

(ii) Regular payments shall be applied first to interest due through the next principal and interest installment due date and then to principal due in chronological order stipulated in the bond; and

(iii) Payments on delinquent accounts will be applied in the following sequence:

(A) Billed delinquent interest;

(B) Past due interest installments;

(C) Past due principal installments;

(D) Interest installment due; and

(E) Principal installment due.

(d) *Fourth preference—serial bonds with installments of principal plus interest.* If instruments described under the first, second, and third preferences are not legally permissible, use serial bonds with a bond or bonds delivered in the amount of each advance. Bonds will be numbered consecutively and delivered in chronological order. Such bonds will conform to the minimum requirements of §1780.94. Provisions for application of payments will be the same as those set forth in paragraph (c)(2)(ii) of this section.

(e) *Coupon bonds.* Coupon bonds will not be used unless required by State statute. Such bonds will conform to the minimum requirements of §1780.94.

§1780.88 [Reserved]

§1780.89 Multiple advances of Agency funds using permanent instruments.

Where interim financing from commercial sources is not used, Agency loan proceeds will be disbursed on an ''as needed by borrower'' basis in

amounts not to exceed the amount needed during 30-day periods.

§ 1780.90 Multiple advances of Agency funds using temporary debt instruments.

When none of the instruments described in § 1780.87 are legally permissible or practical, a bond anticipation note or similar temporary debt instrument may be used. The debt instrument will provide for multiple advances of Agency funds and will be for the full amount of the Agency loan. The instrument will be prepared by bond counsel, or local counsel if bond counsel is not involved, and approved by the State program official and OGC. At the same time the Agency delivers the last advance, the borrower will deliver the permanent bond instrument and the canceled temporary instrument will be returned to the borrower. The approved debt instrument will show at least the following:

(a) The date from which each advance will bear interest;

(b) The interest rate as determined by § 1780.13;

(c) A payment schedule providing for interest on outstanding principal at least annually; and

(d) A maturity date which shall be no earlier than the anticipated issuance date of the permanent instruments and no longer than the 40-year statutory limit.

§§ 1780.91—1780.93 [Reserved]

§ 1780.94 Minimum bond specifications.

The provisions of this section are minimum specifications only and must be followed to the extent legally permissible.

(a) *Type and denominations.* Bond resolutions or ordinances will provide that the instruments be either a bond representing the total amount of the indebtedness or serial bonds in denominations customarily accepted in municipal financing (ordinarily in multiples of not less than $1,000). Single bonds may provide for repayment of principal plus interest or amortized installments. Amortized installments are preferred by the Agency.

(b) *Bond registration.* Bonds will contain provisions permitting registration for both principal and interest. Bonds purchased by the Agency will be registered in the name of ''United States of America'' and will remain so registered at all times while the bonds are held or insured by the Government. The Agency address for registration purposes will be that of the Finance Office.

(c) *Size and quality.* Size of bonds and coupons should conform to standard practice. Paper must be of sufficient quality to prevent deterioration through ordinary handling over the life of the loan.

(d) *Date of bond.* Bonds will normally be dated as of the day of delivery. However, the borrower may use another date if approved by the Agency. Loan closing is the date of delivery of the bonds or the date of delivery of the first bond when utilizing serial bonds, regardless of the date of delivery of the funds. The date of delivery will be stated in the bond if different from the date of the bond. In all cases, interest will accrue from the date of delivery of the funds.

(e) *Payment date.* Loan payments will be scheduled to coincide with income availability and be in accordance with State law.

(1) If income is available monthly, monthly payments are recommended unless precluded by State law. If income is available quarterly or otherwise more frequently than annually, payments must be scheduled on such basis. However, if State law only permits principal plus interest (P&I) type bonds, annual or semiannual payments will be used.

(2) The payment schedule will be enumerated in the evidence of debt, or if that is not feasible, in a supplemental agreement.

(3) If feasible, the first payment will be scheduled one full month, or other period, as appropriate, from the date of loan closing or any deferment period. Due dates falling on the 29th, 30th, and 31st day of the month will be avoided. When principal payments are deferred, interest-only payments will be scheduled at least annually.

(f) *Extra payments.* Extra payments are derived from the sale of basic chattel or real estate security, refund of unused loan funds, cash proceeds of

property insurance and similar actions which reduce the value of basic security. At the option of the borrower, regular facility revenue may also be used as extra payments when regular payments are current. Unless otherwise established in the note or bond, extra payments will be applied as follows:

(1) For loans with amortized debt instruments, extra payments will be applied first to interest accrued to the date of receipt of the payment and second to principal.

(2) For loans with debt instruments with P&I installments, the extra payment will be applied to the final unpaid principal installment.

(3) For borrowers with more than one loan, the extra payment will be applied to the account secured by the lowest priority of lien on the property from which the extra payments was obtained. Any balance will be applied to other Agency loans secured by the property from which the extra payment was obtained.

(4) For assessment bonds, see paragraph (k) of this section.

(g) The place of payments on bonds purchased by the Agency will be determined by the Agency.

(h) *Redemptions.* Bonds will normally contain customary redemption provisions. However, no premium will be charged for early redemption on any bonds held by the Government.

(i) *Additional revenue bonds.* Parity bonds may be issued to complete the project. Otherwise, parity bonds may not be issued unless acceptable documentation is provided establishing that net revenues for the fiscal year following the year in which such bonds are to be issued will be at least 120 percent of the average annual debt serviced requirements on all bonds outstanding, including the newly-issued bonds. For purposes of this section, net revenues are, unless otherwise defined by State statute, gross revenues less essential operation and maintenance expenses. This limitation may be waived or modified by the written consent of bondholders representing 75 percent of the then-outstanding principal indebtedness. Junior and subordinate bonds may be issued in accordance with the loan resolution.

(j) *Precautions.* The following types of provisions in debt instruments should be avoided:

(1) Provisions for the holder to manually post each payment to the instrument.

(2) Provisions for returning the permanent or temporary debt instrument to the borrower in order that it, rather than the Agency, may post the date and amount of each advance or repayment on the instrument.

(3) Provisions that amend covenants contained in Forms RD 1942–47 or RD 1942–9.

(4) Defeasance provisions in loan or bond resolutions. When a bond issue is defeased, a new issue is sold which supersedes the contractual provisions of the prior issue, including the refinancing requirement and any lien on revenues. Since defeasance in effect precludes the Agency from requiring refinancing before the final maturity date, it represents a violation of the statutory refinancing requirement; therefore, it is disallowed. No loan documents shall include a provision of defeasance.

(k) *Assessment bonds.* When security includes special assessment to be collected over the life of the loan, the instrument should address the method of applying any payments made before they are due. It may be desirable for such payments to be distributed over remaining payments due, rather than to be applied in accordance with normal procedures governing extra payments, so that the account does not become delinquent.

(l) *Multiple debt instruments.* The following will be adhered to when preparing debt instruments:

(1) When more than one loan type is used in financing a project, each type of loan will be evidenced by a separate debt instrument or series of debt instruments;

(2) Loans obligated in different fiscal years and those obligated with different terms in the same fiscal year will be evidenced by separate debt instruments;

(3) Loans obligated for the same loan type in the same fiscal year with the same term may be combined in the same debt instrument;

(4) Loans obligated in the same fiscal year with different interest rates that will be closed at the same interest rate may be combined in the same debt instrument.

§ 1780.95 Public bidding on bonds.

Bonds offered for public sale shall be offered in accordance with State law and in such a manner to encourage public bidding. The Agency will not submit a bid at the advertised sale unless required by State law, nor will reference to Agency's rates and terms be included. If no acceptable bid is received, the Agency will negotiate the purchase of the bonds.

§§ 1780.96—1780.100 [Reserved]

PART 1781—RESOURCE CONSERVATION AND DEVELOPMENT (RCD) LOANS AND WATERSHED (WS) LOANS AND ADVANCES

Sec.

1781.1 Purpose.
1781.2 Policy.
1781.3 Authorities, responsibilities, and delegation of authority.
1781.4 Definitions.
1781.5 Eligibility.
1781.6 Loan purposes.
1781.7 Loan and advance limitations and obligations incurred before loan closing.
1781.8 Rates and terms—WS loans and WS advances and RCD loans.
1781.9 Security, feasibility, evidence of debt, title insurance, and other requirements.
1781.10 [Reserved]
1781.11 Other considerations.
1781.12 Preapplication and application processing.
1781.13 [Reserved]
1781.14 Planning, options, and appraisals.
1781.15 Planning and performing development.
1781.16 [Reserved]
1781.17 Docket preparation and processing.
1781.18 Feasibility.
1781.19 Approval, closing, and cancellation.
1781.20 Disbursement of WS and RCD loan funds and WS advance funds.
1781.21 Borrower accounting methods, management, reporting, and audits.
1781.22 Subsequent loans.
1781.23 Servicing.
1781.24 State supplements and availability of bulletins, instructions, forms, and memorandums.
1781.25—1781.100 [Reserved]

AUTHORITY: 5 U.S.C. 301; 7 U.S.C. 1989; 16 U.S.C. 1005.

SOURCE: 62 FR 33500, June 19, 1997, unless otherwise noted.

§ 1781.1 Purpose.

This part prescribes the policies and procedures for making:

(a) Watershed (WS) loans and Watershed (WS) advances for works of improvement in a watershed project; and

(b) Resource Conservation and Development (RCD) loans for measures or projects needed to implement the RCD area plan to achieve objectives in an RCD area.

§ 1781.2 Policy.

(a) Rural Utilities Service (RUS), is an agency of the United States Department of Agriculture established pursuant to section 232 of the Department of Agriculture Reorganization Act of 1994 (Pub. L. 103–354, 108 Stat. 3178), successor to the Farmers's Home Administration. Natural Resources Conservation Service (NRCS), is an agency of the United States Department of Agriculture established pursuant to section 232 of the Department of Agriculture Reorganization Act of 1994 (Pub. L. 103–354, 108 Stat. 3178), successor to the Soil Conservation Service. RUS will make WS and RCD loans available to sponsoring local public bodies, agencies, and nonprofit organizations to assist them in obtaining the local cost of WS works of improvement and RCD measures. Any processing or servicing activity conducted pursuant to this part involving authorized assistance to RUS employees, members of their families, known close relatives, or business or close personal associates, is subject to the provisions of subpart D of Part 1900 of this title. Applicants for this assistance are required to identify any known relationship or association with an RUS employee. RUS will assist the local sponsors and the NRCS in making loans from NRCS construction funds as WS advances when needed for the development of future water supplies or for site preservation.

(b) Rural Development State and local offices will administer these programs on behalf of RUS and will coordinate application processing with

the NRCS and other appropriate State and Federal agencies.

§1781.3 Authorities, responsibilities, and delegation of authority.

(a) NRCS provides technical and financial assistance to sponsoring local organizations for developing WS and RCD area plans and for individual RCD measures or projects and watershed works of improvement. The watershed work plan for developing, operating, and maintaining watershed works of improvement must be agreed upon by sponsoring local organizations and NRCS. When approved, it is the basis for extending technical and cost sharing assistance from watershed funds. The RCD area plan is prepared for the development of the RCD area by sponsoring local organizations with assistance from NRCS and other agencies, endorsed by the Governor or by the agency designated by the Governor, and accepted by the Secretary of Agriculture or his delegate. It includes objectives, planned courses of action, and RCD measures or projects to be developed. It is amended as necessary to include continuing activities and needs in the RCD area.

(b) RUS receives and processes applications for WS loans and NRCS WS advances and RCD loans and makes and services such loan and advances. WS loans are made by RUS from either Public Law 534 (78th Cong.) funds authorized in the Flood Control Act of 1944 (33 U.S.C. 701 *et seq.*) or Public Law 566 (83rd Cong.) funds authorized in the Watershed Protection and Flood Prevention Act of 1954 (68 Stat. 666) to cover a part or all of the local cost for a watershed work of improvement.

(c) WS loans and WS advances may be made to project sponsors in watershed project areas for which:

(1) A watershed work plan has been approved administratively or by resolutions adopted by the Committee on Agriculture and Forestry of the Senate and by the Committee on Agriculture of the House of Representatives; and

(2) Federal assistance has been authorized for the installation of works of improvement by the Administrator of NRCS.

(d) RCD loans may be made in areas authorized for RCD program assistance by the Secretary of Agriculture and for which an RCD plan design or area plan has been accepted by the State NRCS Conservationist.

(e) *Delegation of authority*. The Rural Development State Director is authorized to approve WS and RCD loans subject to limitations in RUS Staff Instruction 1780–1 and conditions of this part. The Rural Development State Director is authorized to relegate authority in accordance with this part to the Chief, Community Programs; or other members of the State Office staff.

(f) NRCS is responsible for providing technical and financial assistance to sponsoring local organizations for planning and developing WS and RCD areas. This includes development of WS and RCD plans and WS works of improvement and RCD measures or projects.

(g) RUS is responsible for making and servicing WS loans and advances and RCD loans.

(h) The NRCS–RUS Agreements in RUS Bulletin's 1781 and 1781–2 include further responsibilities and functions of NRCS and RUS in WS and RCD areas.

§1781.4 Definitions.

(a) *Watershed (WS) project*. An authorized area in which watershed assistance from NRCS and other U.S. Department of Agriculture (USDA) agencies including WS loans and advances may be provided. Watershed assistance is provided in two types of watershed projects identified by the Public Law under which they are authorized.

(1) *Public Law-534 Watershed*. One of the 11 watersheds authorized by Congress in the Flood Control Act of 1944 (33 U.S.C. 701 *et seq.*), Public Law 78–534 as amended.

(2) *Public Law-566 Watershed*. A small watershed of not more than 250,000 acres authorized in accordance with the Watershed Protection and Flood Prevention Act, August 4, 1954, Public Law 83–566 as amended.

(b) *Resource Conservation and Development (RCD) area*. An area in which RCD program assistance from NRCS and other USDA agencies has been authorized. It usually includes all or part of more than one county and may be coterminous with substate planning and

development areas. RCD loans are authorized under Section 32 of Title III of the Bankhead-Jones Farm Tenant Act (7 U.S.C. 1011).

(c) *Watershed plan.* A plan agreed upon by sponsoring local organizations and the NRCS for developing, operating, and maintaining watershed works of improvement.

(d) *RC&D measure plan.* A plan document for a land area, directly controlled or under the jurisdiction of the sponsoring public bodies or public nonprofit organization. It involves one of the measure purposes eligible for RC&D cost sharing assistance. The document sets forth what will be done, how, when and by whom, and involves RC&D technical and/or financial assistance.

(e) *RCD area plan.* A plan prepared by sponsoring local organizations with assistance from NRCS and other agencies for the development of the RCD area which has been endorsed by the Governor or his designated agency and accepted by the Secretary of Agriculture or his delegate. It includes objectives, planned courses of action, and RCD measures to be developed. It is amended as necessary to include continuing activities and needs in the RCD area.

(f) *Watershed works of improvement.* Structural, nonstructural, and land treatment measures included in a watershed plan which are to be installed in a watershed project.

(g) *RCD measure or project.* An activity or development indicated in the RCD area plan as being needed to achieve RCD area goals and objectives.

(h) *Cost sharing.* The WS and RCD legislative authorities provide for sharing certain costs of installing WS works of improvement or RCD measures by the Federal Government and by sponsoring local organizations. Federal cost sharing from WS and RCD funds is provided by NRCS for certain WS works of improvement and RCD measures. Information on amounts, purposes, and procedures for cost sharing is available from the NRCS.

(i) *Local cost.* The part of the cost of a WS work of improvement or a RCD measure or project that is to be paid by a sponsoring local organization.

(j) *Public agency or public body.* A State agency or department or instrumentality, county, municipality or other political subdivision or instrumentality of a State or agencies or districts created by or pursuant to State law for making improvements of a public nature or providing public services such as soil and water conservation districts, irrigation districts, drainage districts, flood prevention and control districts, school districts, other special purpose districts, municipal corporations or similar governmental units.

(k) *Non-profit corporation.* Mutual and other irrigation, water users, water supply, drainage, or waste disposal companies or associations, ditch companies, grazing, recreation and forestry associations and similar associations and organizations generally designated as private corporations operating on a non-profit basis. They may be organized and chartered under special law, general nonprofit corporation law, or general profit corporation law, if operated on a nonprofit basis under adequate charter, bylaw, mortgage or supplementary agreement provisions which will assure continued operation in that manner.

(l) *Sponsoring local organization.* A local public agency or body or a local nonprofit corporation having authority under State law to plan, develop, maintain and operate WS works of improvement or RCD measures or projects included in a WS or RCD area plan. The name of the sponsoring local organization must be included in the plan and sponsorship must be evidenced by execution of the plan.

(m) *Watershed loan.* A loan made by RUS from watershed funds to a sponsoring local organization to develop a WS work of improvement.

(n) *RCD loan.* A loan made by RUS from RCD funds to a local sponsoring organization to develop a RCD measure or project. RCD loans are made from RCD funds to enable sponsoring local organizations to provide a part or all of the local share of cost for an RCD measure.

(o) *Watershed advance.* A loan made from NRCS watershed construction funds to develop a future water supply or for the preservation of a site for a work of improvement authorized in a watershed plan.

(p) *Future water supply.* Water storage capacity in a reservoir with related facilities for release or withdrawal of water to meet future needs for municipal or industrial use.

(q) *Preservation of sites.* Acquisition to assure their availability for planned developments. Land, easements, or rights-of-way essential to preserve sites for watershed works of improvement or RCD measures.

(r) *Processing office.* Means the office designated by the Rural Development State Director to accept and process applications for WS and RCD loans and advances.

§1781.5 Eligibility.

To be eligible for a WS loan, WS advance, or an RCD loan, the sponsoring local organization must meet the following requirements as applicable. Questions on eligibility will be referred to the Regional Attorney, OGC for legal advise prior to development of a loan docket.

(a) Be named in the WS or RCD plan as a sponsor of the development to be financed.

(b) Be legally organized and established in the WS or RCD area with legal authority, responsibility and capability to develop and operate the facility for which assistance is requested.

(c) Have authority under and comply with Federal, State and local laws on such matters as:

(1) Organizing, installing, operating, and maintaining proposed WS works of improvement or RCD measures or projects.

(2) Borrowing money, giving security, levying taxes, making assessments or raising revenues for operation and maintenance of the facility and repayment of loans.

(3) Land use zoning.

(4) Acquiring necessary property, lands, and rights.

(5) Obtaining approval of construction plans and specifications by appropriate Federal, State, and local agencies and construction facilities.

(6) Health and sanitation standards, water pollution control, and environmental regulations.

(7) Design and installation standards.

(8) Public service commission or similar State public body rules and regulations.

(d) Be financially sound and capable of providing service essential to the rural development needs of the area.

(e) If it is a nonprofit corporation.

(1) Membership should be broadly based and representative of the area benefiting from the facility. Membership on the governing board of the corporation will be limited to those living in the area to be benefited unless for justifiable reasons the Rural Development State Director gives prior approval for other than local residents to serve on the board of directors.

(2) The corporation must propose a facility which will primarily serve or generate other substantial, tangible benefits for farmers and other residents of the area. In the case of a recreational development at least two-thirds of the membership must be farmers and other residing in the area.

(3) Nonprofit corporations will not be formed to serve an area which could be served by a public agency which has adequate authority to provide the needed service unless prior approval of the National Office is obtained.

§1781.6 Loan purposes.

(a) *WS and RCD loans.* WS and RCD loans may be used for:

(1) Water development, storage, treatment and conveyance to farms for irrigation and other farm use, including farmstead, livestock, orchard, and crop spraying.

(2) Drainage systems and facilities in farm areas to sustain agricultural production or protect farmers and rural residents from water damage.

(3) Agricultural water management practices for annual streamflow stabilization, recharging ground water reservoirs, and conserving water supplies by management and control of vegetation along waterways and in drainage basins.

(4) Soil conservation and water control facilities such as dikes, terraces, detention reservoirs, stream channels, ditches, and other special land treatment and stabilization measures needed to protect farms and rural residents from water damage, provided such facilities cannot be installed or improved

under, or will not conflict with, other public programs such as those administered by the Corps of Engineers.

(5) Special treatment measures or equipment primarily, though not exclusively, for flood prevention such as:

(i) Facilities and equipment for fire prevention and control.

(ii) Tree planting and establishment of other vegetative cover for stabilizing critical runoff and sediment-producing areas.

(iii) Structural and vegetative measures to stabilize stream channels and gullies.

(iv) Basic farm conservation practices to control runoff, erosion, and sedimentation.

(6) Installing, repairing, and improving water storage facilities, including outlets for immediate and future domestic, municipal and industrial water supply and water quality management, and conveying water to treatment facilities or distribution systems. When payment of loans for such facilities are primarily dependent upon revenues from use of water stored the loan approval official must determine the adequacy of facility for use of the water before a loan is closed.

(7) Public water based recreation and fish and wildlife developer loans will only be made to public bodies for the local share of cost for such developments for which NRCS is providing technical or financial assistance from WS or RCD funds. Loans will not be made for developments larger or more elaborate than that which is included in the WS or RCD plan. Loans may include funds for:

(i) Construction of necessary water resource improvements such as storage capacity in multipurpose and single purpose reservoirs, water level control structures in reservoirs and streams, and stream channel improvements necessary for the development of the facilities. This may include practices for improvement of fish and wildlife habitat and environment and related areas and facilities for proper protection and management of the development.

(ii) Essential developments, improvements, equipment and facilities for access, public health and safety, and efficient operation management and maintenance; such as energy utilities, water supply and waste disposal systems, maintenance buildings, fences, cattle guards, roads and trails, parking, picnicking, camping, beaches, playgrounds, and related shelters and equipment.

(iii) Special areas and structures such as forest and other vegetative cover, marshes, pits, shelters and fish ladders to provide protected natural spawning, breeding, nesting, and feeding for fish and wildlife.

(8) *Soil and water management for agriculture-related pollutant control.* Measures to reduce agriculture-related pollutants that adversely affect the community and the general public. Measures may include, but are not limited to, holding ponds, debris basins, diversions, terraces, and community distribution systems.

(9) Acquiring fee simple title to lands or perpetual easements, or rights-of-way for sites for works of improvement or project measures and related costs for removal, relocation, or replacement of existing improvements including relocation payments for displaced persons, business enterprises and facilities, and other related purposes. Funds for land acquisition will be limited to costs necessary for WS works of improvement or RCD measures. Final construction plans will indicate minimum essential lands and rights-of-way to be acquired. In some cases, sponsoring local organizations may need to acquire lands in excess of actual needs when it is expedient for planned development. If the Rural Development State Director determines that the acquisition of excess land is necessary or expedient for the orderly development of a WS works of improvement, or RCD measure, he may authorize the action subject to the following conditions:

(i) The applicant must agree to sell excess land as soon as practicable and apply the proceeds, together with any income from excess land, on the debt to RUS.

(ii) The applicant must furnish legal evidence of authority to acquire additional land and dispose of it as agreed.

(iii) Evidence must be provided to justify acquisition of additional land.

(iv) Easements for land or water resource protection structures must be perpetual and must not include clauses

that terminate the easement with the dissolution or abandonment of the applicant organization. Loan funds will not be used for an easement that deviates in any way from that provided in the standard NRCS form unless modifications of it are approved by both NRCS and RUS.

(10) Acquisition of water supply or water right by purchase or by appropriation under local, State, and Federal laws. The loan may include funds for the purchase of land on which the water supply or water right is presently being used when:

(i) The water supply or water right cannot be purchased without the land; and

(ii) The value of the land is not the major portion of the cost; and

(iii) Any excess land thus acquired will be sold as soon as possible and the proceeds applied on the loan.

(11) Purchase of equipment and machinery necessary for development and operation of planned WS works of improvement or RCD measures or projects including:

(i) *Special-purpose equipment.* Purchase or rent special-purpose equipment to install or maintain any community facility in categories in paragraph (a)(11) of this section or to establish on farms soil and water conservation measures such as terraces, ponds, land leveling for irrigation or drainage, subsoiling, seeding, tree planting, and removal of brush, scattered trees, and stumps, provided:

(A) Such equipment is not otherwise available when needed.

(B) There is sufficient need and local demand to justify ownership or rental.

(C) Rates to be charged include, among other things, an allowance for depreciation, obsolescence, and replacement based upon the recommendations of the equipment manufacturer or the experience of contractors engaged in providing services for similar types of work.

(ii) *Forestry equipment and services.* Purchase or rent basic special-purpose equipment, facilities, certain land or land rights, and supplies needed for furnishing services for the establishment, improvement, protection, and harvesting of timber (not processing) suitable for lumber, pulp, poles or posts; providing that the forest program and forest practices benefiting from such services are in accordance with approved conservation practices for the development, use, and control of water resources on farms and in forests. Special-purpose equipment may include such items as tractors, bull dozers, plows, planters, trucks, loaders, firefighting equipment, and sprayers. Facilities may include such items as ponds and reservoirs, pipelines, buildings for storage of equipment and supplies, nurseries, access roads, fire lanes, and lookout towers. Supplies may include such things as seed, seedlings, fertilizers, fencing, and pesticides. Land or land-rights acquisition will be limited to that necessary for sites for facilities listed above which are directly related to the forestry program. Loans for these purposes may be made only when the equipment, supplies, and facilities to be provided:

(A) Are not readily available when needed.

(B) Will be justified by local need and demand.

(C) Will be available to users at rates sufficient to cover loan amortization, obsolescence, replacement, operation, and cost of supplies.

(D) Will more efficiently serve the group through cooperative effort.

(12) Refinancing debt obligations of the sponsoring local organization that were incurred before application for a WS or RCD loan when that is not the primary purpose of the loan and:

(i) The debt being refinanced was for works of improvement or measures for which loan funds could be used; and

(ii) The debt is a valid obligation of the sponsor; and

(iii) Creditors will not modify payment terms on existing debts, and the organization cannot pay existing debts and a loan from RUS over the same period of time; and

(iv) Long-term debts will not be refinanced unless necessary to provide a sound basis for the loan or WS advance and concurrence is obtained from the National Office.

(13) If repayment is based on revenues, loan funds (not WS advances) can be used for payment of interest installments until the facility is generating

enough revenue to make accrued interest payments. Loan funds for interest payments will not exceed the estimated amount that will accrue to the end of the third full calendar year after loan closing without prior approval from the National Office.

(14) Relocation payment to displaced persons, businesses, and farm operations and for relocation assistance advisory services in accordance with the Uniform Relocation Assistance and Real Property Acquisition Policies Act of 1970 (Public Law 91–646, 84 Stat. 1894), the Regulations issued by the Secretary of Agriculture under the Act (7 CFR part 21), and the Memorandum of Understanding Between NRCS and RUS.

(15) Services of engineers, architects, attorneys, auditors, construction foremen, managers, clerks, and others for organizing, planning, surveying, supervising, analyzing, developing, operating, managing, and accounting for activities related to loan processing and closing and development for which the loan is made.

(16) Buildings, fences, roads, utilities, facilities, and relocation:

(i) To construct buildings of modest design essential for the operation and maintenance of the works of improvement or measure.

(ii) To provide support facilities and utilities such as gas, electricity, water, sewer, and waste disposal.

(iii) To build or relocate roads, bridges, utilities, fences, and other improvements when necessary to acquire rights-of-ways or to construct or operate the facility.

(17) Services and fees. To pay costs for services for any purposes listed under this section such as:

(i) Fees or other legal expenses for establishing a water right through appropriation, agreement, permit, or court decree.

(ii) Purchase of water stock or membership in an incorporated water users' association to acquire a water supply.

(iii) Costs of labor, technical or professional services, and fees to be incurred in obtaining the loan and in planning and completing the facilities or services to be financed with loan funds.

(iv) Services such as those listed in paragraph (a)(16) of this section.

(b) *RCD loans.* Purposes for which RCD loans may be made in addition to those included in paragraph (a) of this section are:

(1) *Solid waste management.* Lands, equipment and facilities to collect, transport, and dispose of solid waste in sanitary landfills for which NRCS is providing technical assistance.

(2) *Shifts-in-land use.* Lands for uses such as grazing, forestry, wildlife, natural areas and parks, greenbelts, and other open spaces.

(3) *Purchase existing facilities.* Purchase existing facilities for shift-in-land use, soil and water development, conservation, control and use when it is determined that purchase is necessary to provide efficient service through a facility owned and operated by a public agency (or a nonprofit corporation in a rural area), or the owner is either unwilling or unable to make improvements, enlargement, or extensions needed to provide significant additional or improved service for present users or for a new group of users at reasonable rates.

(c) *NRCS watershed advances.* NRCS watershed advances are loans that may be made from NRCS construction funds for the following purposes included in a watershed work plan agreement:

(1) To pay construction costs including cost of engineering and related services for increasing reservoir capacity (including intake and outlet structures) for a future water supply for municipal, domestic, industrial, or agricultural uses.

(2) To preserve sites for authorized watershed works of improvement by acquiring land, easements, and rights-of-ways or other property rights.

§ 1781.7 Loan and advance limitations and obligations incurred before loan closing.

(a) *WS and RCD loan limitations.* (1) Loans will not be used for:

(i) Land treatment measures on individual farms except as provided in § 1781.6(a)(5)(iv).

(ii) Buildings and facilities to be used for lodging, dining or entertainment purposes.

(iii) Building industrial parks or constructing facilities in them, or establishing private industrial or commercial enterprises, or purchasing land to be used primarily for industrial purposes.

(iv) Paying costs allocated to structural measures for flood prevention.

(v) Facilities for the production and harvesting of fish and wildlife such as hatcheries, rearing ponds, and related facilities other than those under natural conditions.

(vi) Facilities primary for treatment and distribution of water or for sewerage, collection and treatment for domestic or industrial use or for municipal or community systems.

(vii) Electric generating, transmission, and distribution facilities, except when provided as part of the minimum basic facilities for recreation and fish and wildlife developments authorized in § 1781.6(a)(7).

(viii) Storm and sanitary sewers and solid waste disposal facilities other than authorized in § 1781.6(b)(1).

(ix) Payment for a tract of land, easements, or rights-of-ways on which NRCS will share the cost if the amount to be paid with loan funds exceeds the difference between the NRCS share and the value on which the NRCS share is based.

(x) Purchasing tracts of land primarily for later resale to private developers or individuals for agricultural or nonagricultural use.

(xii) Buildings for residential, commercial, or industrial, use.

(xiii) Developments on private property primarily for the benefit of the individual property owner.

(xiv) Payment of that part of the cost of facilities, improvements, and practices that could be earned by participation in agricultural conservation programs unless such cost cannot be covered by purchase orders or assignments to material suppliers or contractors. If a loan is made for such purposes for which practice or cost share payments exceed $500, RUS will obtain an assignment on such payments to be paid on the loan.

(xv) Primarily for water and sewage treatment plants and distribution systems.

(xvi) Drainage facilities primarily for the benefit of other than rural areas.

(xvii) Any single RCD measure that requires a loan of more than $500,000.

(xviii) The total amount of principal outstanding for all WS loans made for one or more watershed works of improvement in a single watershed project, whether made to one or more sponsoring organizations, will not exceed $10,000,000.

(b) *Watershed advance limitations.* (1) A WS advance for future water supply will not be used for acquiring property rights including lands, easements, and rights-of-way; water rights; administration of contracts; storage capacity for immediate municipal use; pipelines from the reservoir to place of use; or for other uses such as irrigation, fish and wildlife, and recreation.

(2) A WS advance for increasing reservoir capacity for future water supply will not exceed 30 percent of the total installation cost of one structure.

(3) A WS advance for site preservation will not exceed that determined necessary by NRCS except to purchase land in excess of actual needs in accordance with the provisions of § 1781.6(a)(7).

(4) Before a project agreement is entered into, there must be satisfactory evidence that the borrower will develop the site to be acquired or will use the future water supply and that revenue will be sufficient to meet all scheduled installments.

(c) *Obligations incurred before loan closing.* (1) WS loans, WS advances, and RCD loans may be used for payment of obligations incurred before loan closing when the Rural Development State Director determines that:

(i) The obligations incurred are necessary for planned developments; and

(ii) The obligations are incurred for authorized loan purposes; and

(iii) Contracts and construction plans meet RUS and NRCS standards; and

(iv) The applicant has legal authority to incur the obligations at the time proposed; and

(v) The Rural Development State Director authorizes such action in a letter to the applicant.

(2) The Rural Development State Director's letter will specifically state that the permission is granted on the

condition that RUS is not committed to make a loan and assumes no responsibility for any obligation incurred by the applicant because of the permission granted and that the loan will be closed subject to compliance with agency regulations including closing instructions of the Regional Attorney Office of the General Counsel.

§ 1781.8 Rates and terms—WS loans and WS advances and RCD loans.

(a) *Interest rates.* The interest rate for WS loans, WS advances and RCD loans will be at a rate not to exceed the current market yield for outstanding municipal obligations with remaining periods to maturity comparable to the average maturity for the loan, adjusted to the nearest 1/8 of 1 percent.

(1) For loans, unless otherwise required by State law, interest will accrue from date of check delivery where Form RD 440–22, ''Promissory Note (Association Organization),'' is used. Where bonds are used interest will accrue from the applicable dates recorded on the bonds. Where multiple loan disbursements are used interest will accrue from date of check.

(2) Interest on an advance for future water supply will begin as required by State law, when water is first used from the future water storage capacity installed with advance, or ten years from the scheduled date of the completion of the facility, whichever date is the earlier.

(3) Interest on an advance for preservation of sites will begin on the date the advance is closed.

(b) *Length of repayment period.* The repayment period on loans may not exceed the shortest of the following periods:

(1) The statutory limitation on the sponsoring local organization's borrowing authority.

(2) Fifty (50) years for WS loans and WS advances and 30 years for RCD loans from the date when the principal benefits from the WS works of improvement or RCD measure being financed first become available.

(3) The useful life of the WS works of improvement or RCD measure being financed with loan or advance funds.

(c) *Deferred or partial payments.* Deferred or partial payments may be authorized in the following circumstances:

(1) Payments need to be delayed until the receipt of income from taxes or other revenues is enough to meet a regular installment but not exceed:

(i) The completion date of the facility; or

(ii) The date when benefits from the facility begins; but

(iii) In no case for more than 5 years for other than future water supply.

(2) Payments will depend on the increased returns expected from planned improvements, or from the installation on individual farms of land development or other soil and water improvements essential for obtaining benefits from the improvement to be installed with loan funds.

(3) They will not be used to permit the accelerated payment of other debts, to make capital improvements, or to create operating reserves.

(4) Where prohibited by State statutes; interest payments will not be deferred even though payments on principal may be deferred.

(5) Loans or advances for future water supply will be repaid within the life of the reservoir structure but in no event later than 50 years for WS and 30 years for RCD after the reservoir structure is built. Payments on the principal amount may be deferred one year after the water is first used from the storage capacity installed with the advance or for 10 years from the scheduled completion date of the structures, whichever occurs first.

(i) Interest will begin for a future water supply as required by State law, or when water is first used from the future storage capacity or 10 years from the scheduled date of completion of the facility, whichever occurs first.

(ii) If State law requires that interest be charged and repaid before water is first used or earlier than 10 years from completion date of the structure, interest payments will be scheduled to comply with State law even though payments of principal may be deferred.

(iii) The borrower should be encouraged to begin repayments as soon as practicable after the reservoir is built even though this liberal deferment policy exists.

(iv) WS advances for preservation of sites must be fully repaid before beginning construction of the works of improvement for which such sites were acquired.

(A) Unless a WS advance is to be repaid with a WS loan, installments will be scheduled at the earliest possible date following the date of closing the advance. The date and amount of each such installment will be fixed to coincide with the receipt of income from taxes or other revenues.

(B) Payments for both principal and interest on a WS advance for preservation of sites may be scheduled for payment in one installment to be paid on the date of the closing of a WS loan which includes funds for the repayment of the WS advance.

(C) Interest on a WS advance for preservation of sites will begin on the date the WS advance is closed.

(d) *Payment amortization and application.* (1) A borrower may make prepayments on WS loans, WS advances or RCD loans in any amount at any time.

(2) Payments will be applied first to interest accrued to the date of the receipt of payment, and second to the principal balance. If the regular payments plus any prepayments exceed the cumulative amount due, the excess payments will be applied on the next installment first to interest, then principal. Loan refunds and proceeds from the sale of security property, however, will be applied on the final unpaid installment.

(3) Payments will be scheduled annually beginning one year following the date of loan closing or one year following the end of any approved deferment period, unless another annual due date is required by State statute or upon prior written authorization from the National Office. In those cases where loans are being made under statutes requiring a repayment date other than this, the Rural Development State Director will send a copy of the Regional Attorney's opinion that such is required, to the Finance Office.

(4) When a single obligation instrument is used, amortized installments will be required. When this cannot be done because of state law, serial bonds or a single bond having installments of principal plus interest, stated separately, will be used. In cases where the payment of interest has been deferred, all collections will be applied to interest until such interest has been paid. Also, when a full installment is not paid when due, the payment made will be applied first to accrued interest.

(5) In cases where the indebtedness will be represented by serial bonds or a single bond having installments of principal plus interest, stated separately, annual payments of principal and interest will be scheduled to permit them to be paid in amounts approximately equal to the amounts that would be required for annual amortized installments.

(6) If the borrower will be retiring other debts represented by bonds or notes, the payment on such bonds may be considered in developing the payment schedule for the RUS loan. In some cases, it may be desirable to reduce the amount of payments to RUS in the early years of the loan in order to preclude the necessity for refinancing the outstanding debt. When such payment schedules are proposed, National Office authorization will be obtained prior to loan approval.

(7) *Payment date.* Insofar as loan payments are consistent with income availability, applicable State statutes, and commercial customs in the preparation of bonds or other evidence of indebtedness, they should be scheduled on a monthly basis either in the bond or other evidence of indebtedness or through the use of a supplemental agreement. Such requirements will be accomplished not later than the time of loan closing. When monthly payments are required, such payments will be scheduled beginning one full month following the date of loan closing or the end of any approved deferment period. Subsequent monthly payments will be scheduled each full month thereafter. In those cases where evidence of indebtedness calls for annual or semiannual payments, they will be scheduled beginning six or twelve full months, respectively following the date of loan closing or the end of any approved deferment period. Subsequent payments will be scheduled each sixth or twelfth full month respectively, thereafter. When the evidence of indebtedness is dated the 29th, 30th, or

31st day of a month, the payment date will be scheduled the 28th day of the month.

§ 1781.9 Security, feasibility, evidence of debt, title, insurance and other requirements.

(a) *Security*. WS loans, WS advances, and RCD loans will be secured in accordance with applicable provisions of § 1780.14 of this chapter.

(b) *Feasibility*. All projects financed under the provisions of this part must be based on taxes, assessments, revenues, fees, or other satisfactory sources in an amount that will provide for facility operation and maintenance, a reasonable reserve, and payment of the debt. The Rural Development State Director may obtain needed assistance in determining economic feasibility from officials of NRCS and other appropriate USDA agencies. See § 1780.7(f) of this chapter for applicable economic feasibility requirements and feasibility reports.

(c) *Notes, bonds, and bond transcript documents.* See subpart D of Part 1780 of this chapter for applicable requirements and provisions.

(d) *Insurance.* See § 1780.39(g) of this chapter for requirements.

(e) *National flood insurance.* The requirements of the National Flood Insurance Act of 1968 (42 U.S.C. 4001 *et seq.*) as amended by the Flood Disaster Protection Act of 1973 (42 U.S.C. 4003 *et seq.*) will be complied with in accordance with applicable provisions of RD Instruction 1901-L. Also see § 1780.39(g) of this chapter.

(f) *Borrower contracts and bonds.* See subpart C of Part 1780 of this chapter for applicable provisions.

(g) *Title requirements.* (1) Title evidence for land, easements, and rights-of-way to be acquired with proceeds of loans or advances will be furnished by the sponsoring local organization in accordance with NRCS policies and procedures.

(2) RUS will specify and approve the form and content of instruments for conveying title to or interest in real estate on which a lien will be taken to secure a WS loan, WS advance, or RCD loan. These should be consistent with the applicable provisions of § 1780.14 of this chapter. The Rural Development State Director will make his decision after consultation with the Regional Attorney and the State Conservationist. He will notify NRCS in writing of his decision. Thereafter, title clearance will be completed under NRCS regulations except that a marketable title must be obtained on any tract of land, a part of which will be sold as excess land in accordance with § 1781.6(a)(9). In addition to the title evidence required by NRCS, applicants will furnish an opinion of legal counsel on all land and interest in land acquired with loan or advance funds.

(h) *Purchasing lands, rights and facilities.* The amounts paid for lands, rights, and facilities with loan funds will be not more than that determined to be reasonable and fair by the loan approval official based upon an appraisal of the current market value made by an Rural Development employee or an independent appraiser.

(i) *Water rights.* Applicants will be required to comply with applicable State and local laws and regulations governing appropriating, diverting, storing and using water, changing the place and manner of use of water, and in disposing of water. All of the rights of any landowner, appropriator, or user of water from any source will be fully honored in all respects as they may be affected by facilities installed with WS loans and advances and RCD loans. If, under the provisions of State law, notice of the proposed diversion or storage of water by the applicant may be filed, the applicant will be required to file such a notice. An applicant must furnish evidence to provide reasonable assurance that its water rights will be or have been properly established, will not interfere with prior vested rights, will likely not be contested or enjoined by other water users or riparian owners, and will be within the provisions of any applicable interstate compact.

§ 1781.10 [Reserved]

§ 1781.11 Other considerations.

(a) *Technical assistance.* When pipelines from reservoirs to treatment plants are included in watershed work

plans, NRCS will not furnish engineering services for their design or installation. When such pipelines are to be financed by WS or RCD loans, RUS will supervise the activities of the private engineers retained for the purpose. Such RUS supervision will include, among other things, approval of private engineer's contracts, approval of plans and specifications, authorization of contract awards, spot checks of engineering inspection, and final inspection and acceptance.

(b) *Professional services.* Applicants will be responsible for providing the services necessary to plan projects including design of facilities, preparation of cost and income estimates, development of proposals for organization and financing, and overall operation and maintenance of the facility. Necessary professional services may include such as that of an engineer, architect, attorney, bond counsel, accountant, auditor, and financial advisor or fiscal agent. Form RD 442–19, ''Agreement for Engineering Services,'' may be used when appropriate. RUS Bulletin 1780–7, ''Legal Service Agreement'' may be used to prepare the agreement for legal services.

(c) *Other services.* Contracts for other services such as management, operation, and maintenance will be developed by the applicant and presented to the RUS official developing the docket for review and approval.

(d) *Fees for services.* Fees provided for in contracts, agreements or services will not be more than those ordinarily charged by the profession for similar work when RUS financing is not involved.

(e) *State pollution control or Environmental Protection Agency standards.* Facilities will be designed, installed and operated to prevent pollution of water in excess of established standards. Effluent disposal will conform with appropriate State and Federal Water Pollution Control Standards.

(f) *Water pollution.* When repayment of a WS loan, WS advance, or RCD loan will be dependent upon income from the use or sale of water, RUS approval will be contingent upon a determination that the proposed use of stored water for recreation or municipal supply might not be permitted by a State health department because the water is being polluted from an upstream or other source.

(g) *Environmental requirements.* Actions will be taken to comply with the National Environmental Policy Act (42 U.S.C. 4321 *et seq.*) in accordance with subpart G of part 1940 of this title. When environmental assessments and environmental impact statements have been prepared on WS plans or RCD area plans by NRCS, a separate environmental impact statement or assessment on WS works of improvement or RCD measures for which a WS loan, WS advance, or RCD loan is requested will not be necessary unless the NRCS environmental review fails to meet the requirements of subpart G of part 1940 of this title. The Rural Development State Director should document the action taken by NRCS in compliance with the requirements of the National Environmental Policy Act and formally adopt the impact statement or assessment if satisfactory. If a determination is made that a further analysis of the environmental impact is needed, the Rural Development State Director will make necessary arrangements with the State NRCS conservationist for such action to be taken before a loan is made.

(h) *National Historic Preservation Act.* All projects will comply with the provisions of the National Historic Preservation Act of 1966 (16 U.S.C. 470 *et seq.*) in accordance with RD Instruction 1901–F.

(i) *Civil Rights Act of 1964.* Recipients of WS loans, WS advances, or RCD loans are subject to Title VI of the Civil Rights Act of 1964 (42 U.S.C. 2000d *et seq.*), which prohibits discrimination because of race, color, or national origin. Borrowers must agree not to discriminate in their operations by signing Form RD 400–4, ''Nondiscrimination Agreement,'' before loan closing. This requirement should be discussed with the applicant as early in the negotiations as possible. Necessary actions will be taken in accordance with RD Instruction 1901–E.

(j) *Appraisals.* When required by the Rural Development State Director, appraisals will be made by an Rural Development official designated or an independent appraiser. Form RD 442–10,

''Appraisal Report—Water and Waste Disposal Systems,'' with appropriate supplements, may be modified as needed for use with the type of facilities being appraised.

(k) *Architectural Barriers Act of 1968.* All facilities financed with RUS loans and grants which are accessible to the public or in which physically handicapped persons may be employed or reside must be developed in compliance with this act (42 U.S.C. 4151 *et seq.*).

§ 1781.12 Preapplication and application processing.

(a) *WS and RCD loans*—(1) *Preapplications.* (i) The processing office or other person designated by the Rural Development State Director may assist the applicant in completing SF 424.1, ''Application for Federal Assistance (For Non-construction),'' and will forward one of SF 424.1 to the Rural Development State Director.

(ii) The Rural Development State Director will review SF 424.1 along with other necessary information and will coordinate selection of preapplications to be processed with NRCS. He will consult with NRCS State Conservationist concerning the status of the WS plan or RCD measure plan, the estimated time schedule for construction and cost of the proposed works to be installed with the loan, cost sharing funds to be made available to the applicant, and other pertinent information.

(iii) Form AD–622, ''Notice of Preapplication Review Action,'' will be prepared and signed by the Rural Development State Director within forty-five (45) days from receipt of the preapplication in the processing office stating the results of the review action. An original and one copy of Form AD–622 will be sent to the processing office who will deliver the original to the applicant.

(2) *Applications.* (i) The application includes applicable forms and information indicated in RUS Instruction 1780. When the Rural Development State Director determines that an application will be further processed and Form AD–622 is delivered, he will designate a community program specialist (field), or a member of the community program staff to assist the processing office and the applicant with assembling and processing the application.

(ii) The processing office should arrange needed conferences with the applicant and its legal and engineering consultants, and when necessary, arrange for review of other Rural Development officials, and provide bulletins, forms, instructions and other assistance with assembling and processing the application. A processing checklist and time schedule will be established by using Form RD 1942–40, ''Processing Check List (Public Bodies),'' or Form RD 1942–39, ''Processing Check List (Other than Public Bodies).'' The processing office will send a letter and a copy of the processing checklist to the applicant to confirm decisions reached at the conference. The original and a copy of the processing checklist will be kept in the processing office and will be posted current as application processing actions are taken. The copy will be circulated from the processing office to the State Office for use in updating copies of the forms retained, after which it will be returned from the State Office to the processing office.

(3) *Dockets.* WS loan, WS advance, and RCD loan dockets will be developed and assembled in accordance with applicable RUS Instruction 1780.

(b) *Watershed advances.* Applications for WS advances will be developed and processed with NRCS assistance as necessary.

(1) The Rural Development State Director will arrange with the NRCS State Conservationist to be advised when a local sponsoring organization applies to NRCS for a WS advance.

(2) The Rural Development State Director will request the NRCS State Conservationist to provide information justifying the WS advance along with a written recommendation that it be made. This will include:

(i) Economic feasibility of the proposed WS advance.

(ii) Evidence of the legal authority of the sponsoring local organization to incur the obligation and make required payments.

(iii) Any limitations on the issuance of additional bonds or notes which may be imposed by the provisions of bond ordinances or on resolutions which authorize the issuance of any outstanding

obligation of the sponsoring local organization.

(iv) The amount of WS advance funds to be provided, purpose for which funds will be used, and date funds will be needed.

(3) When the above information has been made available to the Rural Development State Director, he will send written recommendations concerning further action on the WS advance request to the NRCS State Conservationist including actions to be taken in the preparation of the WS advance docket.

(c) *Combination WS loans and WS advances.* If an applicant requests both a WS loan and WS advance, the application for the WS loan should indicate the amount of the WS advance needed and whether a request for it has been made to NRCS. The Rural Development State Director and the NRCS State Conservationist will coordinate applicable processing actions of such applications. When the Rural Development State Director determines that favorable consideration will be given to an application for a loan or advance, he will provide instructions to the processing office for completing and processing the appropriate docket. Any questions concerning eligibility or other legal matters should be cleared with the Regional Attorney.

(d) *Review of decision.* When it is determined that the preapplication or application cannot be given favorable consideration, the Rural Development State Director will return it to the processing office along with written reasons. When the processing office receives this information, it will notify the applicant in writing of the reasons why the request was not favorably considered. The notification to the applicant will state that the RUS Administrator may be requested to review the decision. This action will be taken in accordance with §1780.37 of this chapter.

(1) Upon receipt of the State Office copy of a review request from the applicant, the Rural Development State Director will furnish a report on the matter to the Administrator.

(2) The Administrator will notify the applicant and the Rural Development State Director in writing of his decision and the reasons therefore.

§1781.13 [Reserved]

§1781.14 Planning, options, and appraisals.

(a) WS and RCD area plans are developed by sponsoring local agencies and organizations with technical assistance from NRCS and other Federal and State agencies. These plans include WS works of improvement and RCD measures to be developed or constructed for which NRCS construction funds may be made available on a cost share basis along with funds provided by the sponsoring local organization, a portion or all of which may be obtained by a WS loan and/or WS advance or a RCD loan.

(b) Current information on the availability of cost share funds and purposes for which they may be used is provided by NRCS. The amount of NRCS cost share funds and the amount of funds to be provided by the sponsoring local organizations will be indicated in each plan. The estimated amount of WS loan, WS advance or RCD loan anticipated by the sponsoring local organization should also be included.

(c) Plans for the development or construction of individual WS works of improvement and RCD measures will normally be developed with NRCS technical assistance. In every case they will be approved by both the NRCS State conservationist and the Rural Development State Director or their designated agent when a WS loan, WS advance or RCD loan is made.

(d) Options and appraisals related to the purchase of real estate for which a WS loan, WS advance, or RCD loan is made must be developed in accordance with NRCS and RUS requirements and approved by RUS. The determination of present market value will be made in accordance with §1780.44(g) of this chapter.

§1781.15 Planning and performing development.

Planning and performing development will be handled in accordance with subpart C of part 1780 of this chapter and guidance from NRCS.

§ 1781.16 [Reserved]

§ 1781.17 Docket preparation and processing.

(a) *Loan dockets.* Dockets for WS loans, WS advances and RCD loans will be prepared in accordance with the applicable provisions of part 1780 of this chapter.

(1) *Time for preparation of docket.* Docket preparation may begin as soon as a preliminary draft of the watershed plan or RCD area plan, together with an estimate of costs and benefits, have been prepared with the assistance of NRCS and approved by the sponsoring local organization applicant. However, the applicant must understand that approval of the WS loan, WS advance, or RCD loan will not be determined until the work plan has been authorized for assistance by NRCS. To the extent practicable, docket preparation may be completed by that time to facilitate the availability of funds when needed.

(2) *Instructions for preparation of docket.* When the Rural Development State Director has determined that plans and other requirements are completed to the extent that preparation of the loan docket may begin, he will send the processing office a memorandum giving complete instructions for docket preparation, with a list of documents to be included in the docket.

(3) *Objectives of the docket.* The docket should include information for use in determining that:

(i) The sponsoring local organization:

(A) Has legal authority to construct and operate the proposed facility, borrow money, give security, incur debt, and generate revenue needed for operation, maintenance, reserves, debt payment, and other cash requirements.

(B) Is a sponsor or cosponsor of the WS plan or RCD work plan and is otherwise eligible for assistance.

(ii) Funds will be used for authorized purposes.

(iii) The source of income to be pledged for debt payment and the security proposed is adequate.

(iv) Actions required for loan closing are administratively satisfactory, legally sufficient and properly documented in accordance with Agency regulations.

(4) *Assembly of the docket.* The docket will be assembled in accordance with paragraph (a)(2) of this section and will include the following:

(i) A copy of the WS works of improvement agreement or RCD measure agreement.

(ii) A copy of the Operation and Maintenance Agreement between NRCS and the WS or RCD sponsoring local organization for the WS works of improvement or the RCD measure.

(iii) A statement from the NRCS State Conservationist concurring in the feasibility of the WS work of improvement or RCD measure and that NRCS is providing financial and/or technical assistance in accordance with applicable WS or RCD authorities.

(5) *Narrative by processing office.* This should be included in or attached to the Project Summary. It should relate project costs to benefits of the WS or RCD loan or WS advance. Minimum and average individual charges, tax levies or assessments should be given where applicable. Where taxes or assessments on land will be levied, acres should be indicated and average cost per acre should be given. Analyses of income from recreational facilities should be based on the best information available from local, State, and Federal agencies concerned with such recreation facilities. Determination of water rates, schedules, and estimated consumption of water should be made by the same methods as for loans for domestic water and irrigation.

(6) *Estimates of right-of-way Costs.* The docket should include, as part of the Project Summary, current estimated costs of easements, rights-of-way, and other land rights which must be acquired. The amount estimated for such purposes in the WS or RCD plan should reflect current conditions.

(b) *Loan processing by State Office*—(1) *Review of the docket.* The processing office will check the docket for accuracy and completeness and forward it to the State Office with their recommendations. The Rural Development State Director will review the docket to determine that:

(i) All documents are accurate and complete.

(ii) The proposed loan complies with WS and RCD program policies and procedures of both RUS and NRCS.

(iii) Security is adequate and the repayment plan is sound.

(iv) Funds requested are for authorized purposes.

(v) Actions are in compliance with requirements of applicable Federal and State laws.

(2) *Letter of conditions.* When the Rural Development State Director determines that the docket is complete and the proposed activity is feasible, he will prepare a proposed letter of conditions under which the application may be further processed. The letter will be delivered to and discussed with the applicant. Upon acceptance of the conditions the applicant will indicate intentions to meet the conditions by a letter of interest and the application will be further processed.

(3) *Legal review.* The complete docket and proposed letter of conditions will be forwarded to the Regional Attorney, OGC for review and preparation of closing instructions. If it is not possible to issue closing instructions at that time, the Regional Attorney, will issue a preliminary legal opinion commenting upon the applicants legal existence, authority to incur debt and give security for the WS loan, WS advance, or RCD loan requested and actions to be taken before closing instructions may be issued.

(4) *Authorization for approval.* When the Rural Development State Director receives closing instructions or a preliminary legal opinion for a WS loan, WS advance, or RCD loan that is not within his approval authority he will send this information along with the docket, the proposed letter of conditions, and a memorandum recommending approval to the National Office. A copy of his memorandum will be sent to the processing office. If the proposed action is within the Rural Development State Director's approval authority he need not submit the material listed in this paragraph (b)(4) to the National Office unless he wants review and comments before approval.

(c) *WS advance processing.* (1) When the Rural Development State Director has concurred with the NRCS State Conservationist in the inclusion of a WS advance in a watershed plan, preparation of the advance docket can be initiated and will be processed in the same manner as for a WS loan. Where both a WS loan and WS advance are planned only one docket will be prepared to include both the WS loan and WS advance.

(2) If the advance appears to be sound and proper, the Rural Development State Director will send a proposed memorandum of concurrence to the NRCS State Conservationist. The memorandum will state that RUS concurs in the execution of a work of improvement agreement for which NRCS will obligate advance funds and that RUS will accept the proposed obligations of the applicant to repay the advance subject to conditions specified in or attached to the memorandum. These conditions will include all appropriate requirements in accordance with paragraph (b)(2) of this section and will specify compliance with closing instructions issued by the Regional Attorney. It will also indicate that preparation of the WS advance docket will be in accordance with paragraph (a) of this section.

(3) The Rural Development State Director and the NRCS State Conservationist will sign the memorandum of concurrence to NRCS when:

(i) It has been determined that funds for the advance will be obligated by NRCS; and

(ii) The WS advance docket, has been approved; and

(iii) Closing instructions have been issued by the Regional Attorney; and

(iv) The Rural Development State Director and NRCS State Conservationist have determined that the applicant can comply with all requirements of the letter of conditions and closing instructions.

§ 1781.18 Feasibility.

(a) Before WS loan, WS advance, or RCD loan is approved, a determination of feasibility will be made by the Rural Development State Director based upon a review of plans developed in cooperation with NRCS personnel. The feasibility determination must have the concurrence of the NRCS State Conservationist before a WS loan, WS advance, or RCD loan is approved.

(b) A written assessment of the project's feasibility will be made by the processing office, Architect/Engineer, and Program Chief in their recommendations or comments on the Project Summary. These should reflect concurrence of the respective NRCS personnel in counterpart positions with whom they cooperate in administering these programs.

§ 1781.19 Approval, closing, and cancellation.

(a) Approval and closing actions will be taken in accordance with the applicable provisions of part 1780 of this chapter and the following requirements have been met:

(1) The WS or RCD plan has been approved for operations by NRCS and the applicant is an official sponsoring or cosponsoring local organization for the plan as evidenced by being included in the list of sponsoring or co-sponsoring local organizations in the plan.

(2) Closing instructions or a preliminary legal opinion has been prepared by the Regional Attorney.

(3) The governing body of the applicant's sponsoring local organization has formally passed and approved the loan resolution.

(4) The Rural Development State Director and NRCS State Conservationist have determined that all planned actions can be carried out as proposed in the project plan and the docket.

(5) The NRCS State Conservationist and Rural Development State Director have mutually agreed on the priority to be given the WS loan or WS advance, or RCD loan. In making this determination, consideration will be given to the relative priority of the WS works of improvement or RCD measures to all other such work in the State and the anticipated availability of Federal and local funds to assure continuity of action and work until the project is completed. When funds are to be provided by NRCS for a WS or RCD loan or a WS advance such funds must be obligated by NRCS before closing.

(6) Public bodies will be required to use bond counsel in accordance with subpart D of part 1780 of this chapter.

(b) When favorable action is not taken on a WS loan, WS advance, or RCD loan, the Rural Development State Director will notify the NRCS State Conservationist and the applicant in writing and, if possible, arrange for a meeting of RUS and NRCS representatives with the applicant to explain the action. WS loans, WS advances, or RCD loans may be canceled before closing.

§ 1781.20 Disbursement of WS and RCD loan funds and WS advance funds.

(a) WS and RCD loan funds will be disbursed by the processing office in accordance with the applicable provisions of § 1780.45 of this chapter and RUS Bulletin 1781–1, paragraph (5). Funds will be made available to the borrower as needed for payment of development or other costs for which the loan is made. The processing office must determine that the payment is for an authorized purpose and is for benefits accrued to the borrower. This will require evidence from NRCS in accordance with the applicable provisions of RUS Bulletin 1781–1, ''Memorandum of Understanding Between RUS and NRCS.''

(b) WS advance funds may be disbursed in the same manner as WS loan funds if such funds are transferred to RUS by NRCS for disbursement or they may be disbursed by NRCS. When WS advance funds are disbursed by NRCS, payments from advance of funds will be reported to the Rural Development State Director each month to be reported to the Finance Office and charged to the borrower's account. This action will be taken in accordance with the applicable provisions of RUS Bulletin 1781–1 or RUS Bulletin 1781–2 and agreement between the NRCS State Conservationist and Rural Development State Director as follows:

(1) When a future water supply is being developed with NRCS, WS advance funds, the NRCS State Conservationist will send the Rural Development State Director a monthly report of funds disbursed. This will include three (3) copies of Form NRCS–AS–49a and 49b, ''Contract Payment Estimate and Construction Progress Report,'' along with a transmittal Memorandum showing the sequential number (first, second, third, etc.) of the payment, the amount and date of payment, the

check number by which the payment was made and the cumulative amount of advance funds disbursed to date. When the works of improvement, for which WS advance funds are used is completed the final report will, in addition to the above, show the date that construction was completed and the total amount of WS advance funds used.

(2) WS advances for construction costs will be set out each month on Form NRCS–49a. The Rural Development State Director should make arrangements with the NRCS State Conservationist to be supplied each month with a copy of Form NRCS 49a when advance funds are included together with an official statement from the NRCS State Administrative Officer giving the date of the check and the exact amount of each advance of funds made under the advance provisions of the project agreement or of any engineering services agreement or other supplementary agreement which further implements the proposal for the advance in the project agreement. The original will be sent immediately to the Finance Office and a copy provided for the processing office file.

(3) When WS advance funds are used to acquire property for site preservation the same reporting procedure as for a future water supply will be used except that Form NRCS–AS–49a and 49b if used, should be adopted to indicate fund use. As payments are made on land on which a mortgage or other security instrument is required, such instruments will be executed in accordance with instructions from the Regional Attorney, OGC.

(4) The Rural Development State Director must send the bond or note evidencing WS advance indebtedness of the borrower to the Finance Office along with reports of payments from advance funds disbursed by NRCS. A copy of the bond or note and copy of each report of payment will be sent to the processing office.

(c) *Actions subsequent to closing of loans or advances.* Actions will be taken in accordance with §1780.44 of this chapter.

§1781.21 Borrower accounting methods, management, reporting, and audits.

These activities will be handled in accordance with the provisions of §1780.47 of this chapter.

§1781.22 Subsequent loans.

Subsequent loans will be processed in accordance with this part.

§1781.23 Servicing.

Servicing will be handled in accordance with the provisions of subpart E of part 1951 of this title.

§1781.24 State supplements and availability of bulletins, instructions, forms, and memorandums.

(a) State supplements will be issued as needed in accordance with applicable provisions of part 1780 of this chapter.

(b) Bulletins, instructions, forms and memorandums are available from any USDA/Rural Development office or the Rural Utilities Service, United States Department of Agriculture, Washington, DC. 20250–1500.

§§1781.25—1781.100 [Reserved]

PART 1785—LOAN ACCOUNT COMPUTATIONS, PROCEDURES AND POLICIES FOR ELECTRIC AND TELEPHONE BORROWERS

Subpart A—[Reserved]

Subpart B—RUS Cushion of Credit Account Computations and Procedures

Sec.
1785.66 General.
1785.67 Definitions.
1785.68 Establishing an RUS cushion of credit payment account.
1785.69 Cushion of credit payment account computations.
1785.70 Application of RETRF cushion of credit payments.

AUTHORITY: 7 U.S.C. 901 *et seq.*; Title I, Subtitle D, sec. 1403, Omnibus Budget Reconciliation Act of 1987, Pub. L. 100–203; Pub. L. 103–354, 108 Stat. 3178 (7 U.S.C. 6941 *et seq.*).

Subpart A—[Reserved]

Subpart B—RUS Cushion of Credit Account Computations and Procedures

SOURCE: 54 FR 13669, Apr. 5, 1989, unless otherwise noted.

§ 1785.66 General.

This subpart B sets forth policies and procedures on the RUS cushion of creditpayments program. The cushion of credit payments program will be maintained only for insured loans evidenced by obligations of the Fund. A subaccount within the Fund is hereby established for purposes of promoting rural economic development. It shall be known as the ''Rural Economic Development Subaccount.'' The assets of the subaccount shall be obtained from crediting (on a monthly basis) a sum determined by multiplying the outstanding cushion of credit payments made after October 1, 1987, by the difference (converted on a monthly basis) between the average weighted interest rate paid on outstanding certificates of beneficial ownership issued by the Fund and the 5 percent rate of interest provided to borrowers on cushion of credit payments, repayment of loans made pursuant to Section 313 of the Act, and other sources as provided by law. This subaccount shall be used to provide grants or zero interest loans to borrowers under the Act for the purpose of promoting rural economic development.

§ 1785.67 Definitions.

Accumulated (deferred) interest means interest allowed to accumulate up to, and including, the basis date of RUS notes covering loans approved before June 5, 1957. The accumulated interest is payable in equal periodic installments over the remaining life of the notes.

Act means the Rural Electrification Act of 1936, as amended (7 U.S.C. 901 *et. seq.*).

Advance payment means a voluntary unscheduled payment on an RUS note, made prior to October 2, 1987, credited to the advance payment account of a borrower.

Cushion of Credit Payment means a voluntary unscheduled payment on an RUS note made after October 1, 1987, credited to the cushion of credit account of a borrower.

Current interest means interest payable periodically as it accrues.

Fund means the Rural Electrification and Telephone Revolving Fund established pursuant to the Act.

Interest credit means interest earned on balances in advance payment or cushion of credit accounts. Since the periodic installments are established by the terms of the notes, the interest credits cannot serve to change the total amount of each installment; therefore, an amount equal to the interest credits is added to the principal installment due. On receipt of the full installments, amounts equal to the interest credits (the principal offsets) are added to the respective advance payment accounts.

Prepayment means a voluntary unscheduled payment which the borrower instructs RUS to apply directly and immediately to the principal of an RUS note.

RUS notes means those notes, bonds, or other obligations evidencing indebtedness created by loans made by RUS pursuant to titles I, II, or III of the Act.

Subaccount means the *Rural Economic Development Subaccount* established pursuant to the Act as part of the Fund.

§ 1785.68 Establishing an RUS cushion of credit payment account.

A cushion of credit account shall be automatically established by RUS for each borrower who makes a payment after October 1, 1987, in excess of amounts then due on an RUS note. Such account will bear interest at a rate of 5 percent per annum. All payments on RUS notes which are in excess of required payments and not otherwise designated shall be deposited in the borrowers' respective cushion of credit accounts. Payments received in the month in which an installment is due will be applied to the installment due. However, if the regular installment payment is received at a later date in the month, the first payment received will be applied retroactively

to a cushion of credit account and the second will be applied to the installment due.

§ 1785.69 Cushion of credit payment account computations.

(a) *Deposits.* Cushion of credit payments are credited to the borrowers' cushion of credit accounts.

(b) *Interest.* Interest at the rate of 5 percent per annum shall be credited on a quarterly basis to cushion of credit accounts. Interest earned will appear as a reduction in the interest billed on the borrower's RUS notes and will be separately shown on RUS Form 694, ''Statement of Interest and Principal Due.''

§ 1785.70 Application of RETRF cushion of credit payments.

(a) If a maturing installment on an RUS note or a note which has been guaranteed by RUS is not received by its due date, funds will be withdrawn from the borrower's cushion of credit account and applied as of the installment due date beginning with the oldest of such notes as follows: first, to current interest then due on all notes; second, to the accumulated interest due, if any, on all notes; and third, to the principal then due on all notes. In those instances where a borrower has prior to October 2, 1987, maintained an advance payment account with RUS, its cushion of credit account will be applied in accordance with the provisions of this section prior to using any balance remaining in its advance payment account to pay interest and principal installments on notes. Computations required under this section have been made by RUS as of October 2, 1987; however, on or before May 25, 1989 any borrower may make a one time irrevocable election to have all such computations made as of April 5, 1989, by filing written notice to that effect with Robert D. Ruddy, Director, Fiscal Accounting Division, Rural Utilities Service, Washington, DC 20250–1500.

(b) A borrower may reduce the balance of its cushion of credit account only if the amount obtained from the reduction is used to make scheduled payments on loans made or guaranteed under the Act.

[54 FR 13669, Apr. 5, 1989; 54 FR 17703, Apr. 25, 1989]

PART 1786—PREPAYMENT OF RUS GUARANTEED AND INSURED LOANS TO ELECTRIC AND TELEPHONE BORROWERS

Subpart A—General [Reserved]

Sec.

1786.1—1786.24 [Reserved]

Subpart B—Prepayment of RUS Guaranteed Federal Financing Bank Loans Pursuant to Section 306(A) of the RE Act

1786.25 Purpose.
1786.26 Policy.
1786.27 Definitions and Rules of Construction.
1786.28 Qualifications.
1786.29 Prepayment Authority, Program Allocations, Categories of Prepayment Applications and Financially Distressed Borrowers' Reserve.
1786.30 Processing procedure.
1786.31 Application procedure.
1786.32 Settlement procedure.
1786.33 Forms.
1786.34 Access to records of lenders, servicers, and trustees.
1786.35 Loss, theft, destruction, mutilation, or defacement of RUS guarantee.
1786.36 Other prepayments.
1786.37 Application of regulation to previous prepayments.
1786.38 Judicial review.
1786.39—1786.49 [Reserved]

Subpart C—Special Discounted Prepayments on RUS Direct/Insured Loans

1786.50 Purpose.
1786.51 Definitions.
1786.52 Prepayment.
1786.53 Discounted present value.
1786.54 Eligibility criteria.
1786.55 Application procedure.
1786.56 Approval of applications.
1786.57 Prepayment agreement.
1786.58 Security.
1786.59 Loan fund audit.
1786.60 Closing.
1786.61 Other prepayments.
1786.62—1786.74 [Reserved]

Subpart D [Reserved]

Subpart E—Discounted Prepayments on RUS Notes in the Event of a Merger of Certain RUS Electric Borrowers

1786.95 Purpose.
1786.96 Definitions.
1786.97 Prepayment.
1786.98 Discounted present value.
1786.99 Eligibility criteria.
1786.100 Application procedure.
1786.101 Approval of application.
1786.102 Prepayment agreement.
1786.103 Security.
1786.104 Loan fund audit.
1786.105 Closing.
1786.106 Other prepayments.

APPENDIX A TO SUBPART E TO PART 1786—LISTING OF ELIGIBLE BORROWERS
APPENDIX B TO SUBPART E TO PART 1786—FEDERAL RESERVE STATISTICAL RELEASE

Subpart F—Discounted Prepayments on RUS Electric Loans

1786.150 Purpose.
1786.151 Definitions and rules of construction.
1786.152 Prepayments of RUS loans.
1786.153 Discounted present value.
1786.154 Qualified Notes.
1786.155 Eligible borrower.
1786.156 Application procedure.
1786.157 Approval of applications.
1786.158 Terms and conditions of prepayment agreement.
1786.159 Initial closing.
1786.160 Subsequent closings.
1786.161 Return of Qualified Notes and release of lien.
1786.162 Outstanding loan documents.
1786.163 Existing wholesale power contracts.
1786.164 Loan fund audit.
1786.165 Reporting.
1786.166 Approvals.
1786.167 Restrictions to additional RUS financing.
1786.168 Borrowers who prepaid under this part prior to October 21, 1992.
1786.169 Liability.
1786.170 Prepayment of loans approved after December 20, 1993. [Reserved]
1786.171—1786.199 [Reserved]

Subpart G—Refinancing and Prepayment of RUS Guaranteed FFB Loans Pursuant to Section 306(c) of the RE Act

1786.200 Purpose.
1786.201 Definitions and rules of construction.
1786.202 Prepayment and refinancing of RUS guaranteed FFB loans.
1786.203 Special considerations.
1786.204 Limitations.
1786.205 Application procedure.
1786.206 Refinancing note.
1786.207 Prepayment premium.
1786.208 Increased principal.
1786.209 Outstanding loan documents.
1786.210 Approvals.

AUTHORITY: 7 U.S.C. 901–950b; Title I, subtitle B, Pub. L. 99–509; Pub. L. 101–624, 104 Stat. 4051; Pub. L. 103–354, 108 Stat. 3178, (7 U.S.C. 6941 *et seq.*), unless otherwise noted.

SOURCE: 55 FR 1145, Jan. 11, 1990, unless otherwise noted.

EDITORIAL NOTE: Nomenclature changes to part 1786 appear at 55 FR 49250, Nov. 27, 1990.

Subpart A—General [Reserved]

§§ 1786.1—1786.24 [Reserved]

Subpart B—Prepayment of RUS Guaranteed Federal Financing Bank Loans Pursuant to Section 306(A) of the RE Act

AUTHORITY: 7 U.S.C. 901–950b; Title I, Subtitle B, Pub. L. 99–509; Title I, Pub. L. 100–202; Pub. L. 100–203; Title VI, Pub. L. 100–460; Pub. L. 103–354, 108 Stat. 3178 (7 U.S.C. 6941 *et seq.*).

SOURCE: 55 FR 1145, Jan. 11, 1990, unless otherwise noted. Redesignated at 55 FR 49250, Nov. 27, 1990.

§ 1786.25 Purpose.

This subpart contains the general regulations of the Rural Utilities Service (RUS) for implementing the provisions of (a) section 306(A) of the Rural Electrification Act of 1936, as amended (RE Act); (b) section 633 of the Rural Development, Agriculture, and Related Agencies Appropriations Act, 1988 (Pub. L. 100–202) (the continuing resolution); and (c) section 637 of the Rural Development, Agriculture, and Related Agencies Appropriations Act, 1989 (Pub. L. 100–460) (the 1989 Appropriations Act) which permit, in certain circumstances, loans made by the Federal Financing Bank (FFB) and guaranteed by the Administrator of RUS to be prepaid by RUS electric and telephone borrowers by paying the outstanding principal balance due on the FFB loan, using a private loan with the existing RUS guarantees or using internally generated funds.

§1786.26 Policy.

It is the policy of RUS to facilitate the prepayment of FFB loans in accordance with the provisions of section 306(A) of the RE Act and section 633 of the continuing resolution as modified by section 637 of the 1989 Appropriations Act. Furthermore, consistent with the RE Act, the continuing resolution and the 1989 Appropriations Act, it is the policy of RUS to implement the objectives of the prepayment program in a manner which does not result in an increase in loan guarantee risk or an inappropriate increase in the administrative burden on RUS.

§1786.27 Definitions and Rules of Construction.

(a) *Definitions.* For the purposes of this subpart, the following terms shall have the following meanings:

Administrator means the Administrator of RUS.

Application Category shall have the meaning set forth in §1786.29(c).

Application period means a period during which RUS is accepting applications to make prepayments pursuant to this subpart, and initially means:

(1) In the case of telephone borrowers, the period commencing on February 12, 1990 and ending on March 12, 1990;

(2) In the case of financially distressed borrowers, the period commencing October 1, 1990 and ending on July 30, 1993; or

(3) In the case of other borrowers, the period to be announced by RUS.

Borrower means any organization which has an outstanding FFB loan guaranteed by RUS under the RE Act.

Business Day means any day other than a Saturday, a Sunday, a legal public holiday under 5 U.S.C. section 6103 for the purposes of statutes relating to pay and leave of employees, or any other day declared to be legal holiday for the purposes of statutes relating to pay and leave of employees by Federal statute or Federal Executive Order.

Continuing Resolution means section 633 of the Rural Development, Agriculture, and Related Agencies Appropriations Act, 1988 (Pub. L. 100–202).

Date Received means the date inscribed on the Notice of Intent to Prepay the Federal Financing Bank, by an authorized official of RUS, as the date the application was received.

Documentation means all or part of the agreements relating to a prepayment under this part, irrespective of whether RUS is a party to each agreement, including all exhibits to such agreements.

Electric Program Applications shall have the meaning specified in §1786.29(c)(1).

Existing Loan Guarantee means a guarantee of payment issued by RUS to FFB pursuant to the RE Act for an FFB loan made on or before July 2, 1986.

Fees means any fees, costs or charges, incurred in connection with obtaining the private loan used to make the prepayment including without limitation, accounting fees, filing fees, legal fees (including fees and disbursements charged by counsel representing the borrower), printing costs, recording fees, trustee fees, underwriting fees, capital stock purchases or other equity investment requirements of the lender, and other related transaction expenses.

Financially Distressed Borrower means an RUS-financed electric system determined by the Administrator to be either (1) in default or near default on interest or principal payments due on loans made or guaranteed under the RE Act, and is making a good faith effort to increase rates and reduce costs to avoid or mitigate default; or (2) participating in a work out or debt restructuring plan with RUS, either as the borrower being restructured or as a borrower providing assistance as part of the work out or restructuring.

Financially Viable Lender means:

(1) A lender (i) which has a capital and surplus of at least $50 million; (ii) is a beneficiary of an irrevocable letter of credit, in form and substance satisfactory to the Administrator, payable to it in the amount of $50 million; (iii) is the beneficiary of a guarantee, in form and substance satisfactory to the Administrator, in the amount of $50 million from a lending institution with a capital and surplus of at least $50 million; or (iv) has other credit support, in form and substance satisfactory to the Administrator, in the amount of $50 million; or

(2) In the event of a prepayment totalling less than $100 million, a lender (i) which has a capital and surplus of at least $10 million; (ii) is a beneficiary of an irrevocable letter of credit, in form and substance satisfactory to the Administrator, payable to it in the amount of $10 million; (iii) is the beneficiary of a guarantee, in form and substance satisfactory to the Administrator, in the amount of $10 million from a lending institution with a capital and surplus of at least $10 million; or (iv) has other credit support, in form and substance satisfactory to the Administrator, in the amount of $10 million;

FFB means the Federal Financing Bank, an instrumentality and wholly owned corporation of the United States.

FFB Loan means one or more advances, or a part of one or more advances, made on or before July 2, 1986, by FFB on a promissory note or notes executed by a borrower and guaranteed by RUS pursuant to section 306 of the RE Act (7 U.S.C. 936).

Guarantee means the original endorsement, in the form specified by RUS which is executed by the Administrator and shall be an obligation supported by the full faith and credit of the United States and incontestable except for fraud or misrepresentation of which the holder had actual knowledge at the time it became a holder.

Increase in Loan Guarantee Risk means the change in any of the components of loan guarantee risk associated with the private loan which in the judgment of RUS increases the magnitude or duration of the loan guarantee risk currently assumed by RUS in connection with the existing loan guarantee;

Internally Generated Funds means money belonging to the borrower other than: (1) Proceeds of loans made or guaranteed under the RE Act or (2) funds on deposit in the cash construction trustee account;

Lender means the organization making and servicing the private loan which is to be guaranteed under the provisions of this subpart and used to prepay the FFB loan. The term *lender* does not include the FFB, or any other Government agency.

Loan Guarantee Agreement means the written contract by and among the lender, the borrower, the Administrator, and such other parties that RUS may require, setting forth the terms and conditions of a guarantee issued pursuant to the provisions of this subpart.

Loan Guarantee Risk means the risk as determined by RUS associated with guaranteeing a loan for a particular borrower. Components of loan guarantee risk include the following:

(1) The outstanding principal balance of a loan;

(2) The dollar weighted average interest rate (stated as an annual percentage rate) on a loan;

(3) The final maturity date of a loan;

(4) The annual principal amortization of the loan; and

(5) Any other factor that as determined by RUS increases the magnitude or duration of the guarantee.

Mortgage means the mortgage and security agreements by and among the borrower and RUS, as from time to time supplemented, amended and restated.

1989 Appropriations Act means the Rural Development, Agriculture, and Related Agencies Appropriations Act, 1989 (Pub. L. 100–460).

Notice of Intent to Prepay the Federal Financing Bank means the notice in the form specified in § 1786.33 hereof.

Prepayment Authority shall have the meaning specified in § 1786.29(a).

Private Loan means a loan or loans to be guaranteed under the provisions of this part and used to prepay an FFB loan.

Pro-rated Percentage shall have the meaning specified in § 1786.30(b)(1).

RE Act means the Rural Electrification Act of 1936 (7 U.S.C. 901–950b), as amended.

REA means the Rural Electrification Administration formerly an agency of the United States Department of Agriculture and predecessor agency to RUS with respect to administering certain electric and telephone loan programs.

RUS means the Rural Utilities Service, an agency of the United States Department of Agriculture established pursuant to Section 232 of the Federal Crop Insurance Reform and Department of Agriculture Reorganization

Act of 1994 (Pub. L. 103–354, 108 Stat. 3178), successor to REA with respect to administering certain electric and telephone programs. See 7 CFR 1700.1.

Service or *Servicing* means the following activities:

(1) The billing and collecting of the private loan payments from the borrower;

(2) Notifying the Administrator promptly of any default in the payment of principal and interest on the private loan and submitting a report, as soon as possible thereafter, setting forth the servicer's views as to the reasons for the default, how long the servicer expects the borrower to be in default, and what corrective actions the borrower states it is taking to achieve a current debt service position;

(3) Notifying the Administrator of any known violations or defaults by the borrower under the lending agreement, loan guarantee agreement, the mortgage, or related security instruments, or conditions of which the servicer or the lender is aware which might lead to nonpayment, violation or other default; and

(4) Such other activities as may be specified in the loan guarantee agreement.

Settlement Date means the date the borrower disburses funds to the FFB in order to complete a prepayment pursuant to this subpart, and shall be a date agreed to by RUS, and a date on which both the FFB and the Federal Reserve Bank of New York are open for business.

Standard Electric Program Application shall have the meaning specified in § 1786.29(c)(1).

Telephone Borrower means a borrower that provides telephone service as defined in 7 CFR 1735.2(a).

Telephone Program Applications shall have the meaning specified in § 1786.29(c)(2).

(b) *Rules of Construction*. Unless the context shall otherwise indicate, the terms defined in § 1786.27(a) hereof include the plural as well as the singular, and the singular as well as the plural. The words ''herein,'' ''hereof'' and ''hereunder'', and words of similar import, refer to this subpart as a whole.

[55 FR 1145, Jan. 11, 1990, as amended at 55 FR 35426, Aug. 30, 1990. Redesignated at 55 FR 49250, Nov. 27, 1990, and amended at 59 FR 66440, Dec. 27, 1994]

§ 1786.28 Qualifications.

(a) *Borrowers*. To qualify to prepay an FFB loan pursuant to this subpart, the borrower must:

(1) Demonstrate that the FFB loan was outstanding on July 2, 1986;

(2) Prepay the FFB loan by:

(i) Using a private loan with the existing loan guarantee;

(ii) Using internally generated funds; or

(iii) Using a combination of a private loan with the existing loan guarantee and internally generated funds; and

(3) Certify that any savings resulting from such prepayment will be passed on to its customers, or used to improve the financial strength of the borrower in cases of financial hardship.

(b) *Lenders*. To participate pursuant to this subpart, in a borrower's prepayment of an FFB loan by means of a private loan, the lender must:

(1) Be a private legally organized lender, or a lender established pursuant to the Farm Credit Act of 1971, as amended;

(2)(i) Be subject to credit examination and supervision by either an agency of the United States or a state and be in good standing with its licensing authority and have met the requirements, if any, of licensing, lending and loan servicing in the state where the collateral for the Loan is located;

(ii) Be a financially viable lender; or

(iii) Be a trust administered. by an entity meeting the requirements of paragraph (b)(2) (i) or (ii) of this section; and

(3) Have the capability to adequately service the private loan either by using its own resources or by contracting for such resources with a financially viable lender. Under no circumstances may the borrower or an affiliate of the borrower service the private loan. A qualified lender may participate out each private loan to entities other than a Government agency, the borrower, or an affiliate of the borrower, provided

that such participation shall be on terms and conditions satisfactory to the Administrator.

(c) *Private Loans.* A borrower who qualifies pursuant to § 1786.28(a) may at its option elect to use a private loan to make a prepayment, or a portion of a prepayment, pursuant to this subpart. Private loans, the proceeds of which are used exclusively to prepay FFB loans, shall be eligible for a guarantee under this subpart. The Administrator shall endorse a guarantee on each note evidencing a qualifying private loan. The private loan shall be structured in a manner which in the judgment of RUS shall not result in an increase in loan guarantee risk and shall comply with the following:

(1) The private loan shall provide for the periodic payment of interest by the borrower not less frequently than annually, at either a variable or fixed rate in a manner which shall not result in an increase in loan guarantee risk. (i.e. The dollar weighted average interest rate on the private loan shall be less than or equal to the dollar weighted average interest rate on the FFB loan being prepaid, so that:

$$C_r = C_o + \frac{\sum_{i=1}^{n} (C_o - A_i) T_i}{(J - n)}$$

Where,

C_r=The revised interest rate cap;

C_o=The original interest rate cap at the time of prepayment;

A_i=The average interest rate actually charged in the ith period;

T_i=Length of the ith period expressed in years;

n=The number of years that have elapsed since the initial prepayment;

J=The initial term of the private loan, at the time of prepayment;

Subject to the constraint that A_1 must be less or equal to C_o).

(2) Principal payments on the private loan shall be made either quarterly, semiannually, or annually and shall commence on or before the last day of the calendar year during which the prepayment pursuant to this subpart was made.

(3) With the approval of the Administrator, the lender may refund the private loan with the proceeds of another loan from the same lender, with the existing guarantee and under terms, conditions, and a structure substantially similar to the private loan, on such dates as the lender, the borrower and RUS may agree, provided however, that such a refunding loan shall comply with the provisions of § 1786.28(c) hereof. Additionally, with the approval of the Administrator, the private loan may be prepaid either in whole or in part at any time by the borrower using its general funds.

(4) The private loan and the guaranteed note evidencing the private loan shall not be directly or indirectly part of a transaction the income of which is excluded from gross income for the purposes of Chapter I of the Internal Revenue Code of 1986.

(5) The guaranteed note evidencing the private loan shall not be transferable or assignable except

(i) With the written approval of the Administrator;

(ii) In the event that the guaranteed note evidencing the private loan is held by a trust, to a similar trust, in connection with a refunding loan made by the lender pursuant to § 1786.28(c)(3); or

(iii) As an undivided pro rata interest in a pool of obligations.

(6) The loan documentation shall provide RUS with the right to accelerate the note evidencing the private loan upon the occurrence of any ''Event of Default'' under the mortgage with the effect that all of the unpaid principal and interest on any such note shall become immediately due and payable to RUS, and RUS shall continue to pay under its guarantee the principal of and interest on such note without taking into account such acceleration. The loan documentation shall also provide RUS with a right, upon the occurrence of such an ''Event of Default,'' to accelerate payment on its guarantee and accelerate payment on the note evidencing the private loan on the earlier of any date the interest rate on the private loan is reset, without premium or penalty; any date the borrower may prepay in accordance with the terms of the private loan, or the tenth anniversary of the date the private loan first bears interest at a fixed interest rate.

(7) The principal of the private loan shall not include amounts attributable

to fees associated with the private loan. At the time it submits its application, a borrower may request that the Administrator approve the inclusion of amounts attributable to fees as part of the interest rate on the private loan, if the net effective interest rate including such fees meets the test contained in §1786.28(c)(1). For the purposes of these regulations, such financed fees shall be considered ''interest''.

(8) Private loans and guaranteed notes evidencing private loans shall otherwise be in form and substance satisfactory to the Administrator.

(d) *Prepayments Without a Guarantee.* Qualifying borrowers may elect to utilize internally generated funds without a guarantee to prepay an FFB loan, or partially prepay an FFB loan, pursuant to this subpart, if

(1) The borrower notifies RUS, of its intent to prepay using internally generated funds in accordance with the application procedures set forth in this subpart; and

(2) The borrower submits a certification to RUS that the prepayment does not, materially adversely affect the financial stability of the borrower and its ability to meet all its obligations, including debt service on all loans made, guaranteed or lien accommodated under the RE Act which will remain outstanding after the date of the prepayment.

(e) *The Use of both a Private Loan and Internally Generated Funds.* Qualifying borrowers may elect to utilize a combination of private loans and internally generated funds without a guarantee, to prepay an FFB loan pursuant to this subpart, if

(1) The private loans comply with the provisions of paragraph (c) of this section, and

(2) The borrower complies with paragraph (d) of this section.

(f) *FFB loans.* A borrower's FFB loans that qualify to be prepaid pursuant to this subpart are:

(1) *Qualifying Borrowers.* In the case of qualifying borrowers other than financially distressed borrowers, FFB advances with long-term maturity dates may be prepaid pursuant to this subpart; and

(2) *Financially distressed borrowers.* FFB loans that are eligible to be prepaid by utilizing the financially distressed borrowers' reserve are advances with long-term maturity dates, and which in the opinion of the Administrator, if prepaid, would result in an economic savings to the financially distressed borrower.

[55 FR 1145, Jan. 11, 1990, as amended at 55 FR 35426, Aug. 30, 1990. Redesignated at 55 FR 49250, Nov. 27, 1990]

§1786.29 Prepayment Authority, Program Allocations, Categories of Prepayment Applications and Financially Distressed Borrowers' Reserve.

(a) *Prepayment Authority.* So long as the aggregate amount of prepayments made after December 22, 1987, including prepayments made pursuant to §1786.28(d) and §1786.28(e), under section 306(A) of the RE Act, does not exceed $2.5 billion, the approval of the Secretary of the Treasury is not required in order to make a prepayment pursuant to this subpart (such amount of prepayments is hereinafter called prepayment authority).

(b) *Program Allocations.* In accordance with the provisions of section 637 of the 1989 Appropriations Act, $350 million of prepayment authority is allocated to RUS-financed electric systems and $150 million of prepayment authority is allocated to RUS-financed telephone utilities. The amounts of prepayment authority allocated to electric program borrowers and telephone program borrowers shall not be transferred between programs. Borrowers may not sell, assign, or otherwise transfer prepayment authority to another borrower.

(c) *Categories of Prepayment Applications.* Applications received by RUS from borrowers desiring to prepay pursuant to this subpart will be separated into the following two application categories:

(1) *Electric Program Applications.* Electric program applications are applications to make a prepayment pursuant to this subpart from RUS-financed electric utilities, that qualify in accordance with §1786.28(a) hereof and which are received by RUS during the application period. Electric program applications will be further subdivided

and classified as being either (i) a financially distressed borrower's application, or (ii) a standard electric program application. Applications received from borrowers determined by the Administrator not to be a financially distressed borrower will be classified and processed as a standard electric program application;

(2) *Telephone Program Applications.* Telephone program applications are applications to make a prepayment pursuant to this subpart from RUS-financed telephone utilities that qualify in accordance with § 1786.28(a) hereof and which are received by RUS during the application period;

(d) *Financially distressed borrowers' reserve.* The $350 million of prepayment authority allocated for RUS-financed electric utilities, is initially set aside into a financially distressed borrowers' reserve. This reserve of prepayment authority will be available for prepayments pursuant to this subpart by financially distressed borrowers who apply to make such a prepayment during the application period. In the event that a portion of financially distressed borrowers' reserve remains unsubscribed at the end of the initial application period, the unallocated portion of the financially distressed borrowers' reserve will be allocated to other electric borrowers having submitted applications during an application period to be announced by RUS. Such prepayment applications shall be classified as standard electric program applications.

[55 FR 1145, Jan. 11, 1990, as amended at 55 FR 35427, Aug. 30, 1990. Redesignated at 55 FR 49250, Nov. 27, 1990]

§ 1786.30 Processing procedure.

(a) *Priority of Processing.* The determination of the order or method in which applications or portions of applications will be processed by RUS pursuant to this subpart rests solely within the discretion of the Administrator. RUS expects that a number of prepayment applications will be processed simultaneously. In the event that it becomes necessary to establish priorities of processing, prepayment applications will be processed without regard to the date received, generally in the following order of priority:

(1) Applications from telephone borrowers;

(2) Applications from financially distressed borrowers;

(3) Applications from all other borrowers. When assigning priority to such applications, RUS will consider a number of factors, including without limitation, (i) the number of prepayment applications being processed by the area office; (ii) the novelty or complexity of the proposed transaction; (iii) the method of prepayment; and (iv) the availability of resources. In the event that RUS receives during the initial application period, prepayment applications from such borrowers in an amount less than remaining prepayment authority for each respective program, RUS will establish a new application period and publish a notice to that effect in the FEDERAL REGISTER.

(b) *Pro-rated Applications.* Standard electric program applications, and telephone program applications will be prorated within their respective application categories to permit partial prepayments in the event that the aggregate amount of prepayment applications received during the application period exceeds the amount of prepayment authority allocated to that application category. In such circumstances, the amount of each borrower's permitted prepayment shall be determined within each respective application category, as follows:

(1) The principal amount of FFB advances under each individual application, which, if prepaid pursuant to this subpart, would result in an economic savings to the borrower, shall be divided by the aggregate principal amount of FFB advances, under all of the applications, which, if prepaid pursuant to this subpart, would result in an economic savings to the borrowers, in order to determine a percentage (hereinafter called a pro-rated percentage) for each borrower;

(2) Each borrower's share of the prepayment authority for its application category shall be equal to the product of (i) the prepayment authority times (ii) the respective pro-rated percentage, and may be used to prepay a portion of any of the borrower's FFB loans listed pursuant to § 1786.31(a)(2);

(3) If any approved prepayment transaction fails to be settled within 180 days of the date the borrower is notified by RUS of its prepayment allocation, RUS may rescind its approval. The unused prepayment authority represented by such a failed transaction is subject to being included in any subsequent notice of a new application period under this subpart; and

(4) In the event that applications from financially distressed borrowers exceed the amount prepayment authority remaining in the financially distressed borrowers' reserve, the Administrator at his discretion shall select one or more of such applications and allocate the reserve. In making such a selection and allocation, the Administrator may consider various factors, including without limitation, (i) the dollar amount of savings to be realized by the proposed prepayment; (ii) the interest rates on the FFB loans proposed to be prepaid; (iii) the magnitude of the default or potential default; and (iv) whether the borrower has previously completed a prepayment under section 306(A).

(c) *Notification of Borrowers' Allocations.* Promptly after allocating the prepayment authority to borrowers and completing any proration calculations that may be necessary, RUS will return to each borrower submitting a prepayment application pursuant to this subpart, a copy of their Notice of Intent to Prepay the Federal Financing Bank specifying the amount of the borrower's prepayment allocation.

[55 FR 1145, Jan. 11, 1990, as amended at 55 FR 49250, Nov. 27, 1990]

§ 1786.31 Application procedure.

Applications to make a prepayment pursuant to this subpart shall be submitted to RUS on such forms as RUS may prescribe in the following manner:

(a) *Application.* Each borrower desiring to make a prepayment pursuant to this subpart shall submit an application to RUS. No application from a borrower will be accepted by RUS prior to the commencement of the application period. An application shall not be deemed submitted to RUS until it is received by RUS, and the ''Date Received'' has been inscribed on the Notice of Intent to Prepay the Federal Financing Bank by an authorized official of RUS. Incomplete applications may be returned to the borrower at the discretion of RUS and thereafter must be resubmitted in order to be processed. To be considered complete, the application should include the following:

(1) ''Notice of Intent to Prepay the Federal Financing Bank'' in the form specified in § 1786.33 hereof;

(2) A listing of each FFB loan advance to be prepaid by loan designation, RUS note number, RUS account number, advance date, maturity date, original amount, outstanding balance, and interest rate;

(3) Evidence that the borrower meets the qualification provisions of § 1786.28(a) of these regulations;

(4) The certification set forth in part A of the Notice of Intent to Prepay the Federal Financing Bank executed by the chief executive officer of the borrower;

(5) In the event that a borrower submits a prepayment application which proposes to utilize a portion of the financially distressed borrowers' reserve, a certification signed by the chief executive officer of the system to the effect that the borrower is either (i) in default or near default on interest or principal payments due on loans made or guaranteed under the RE Act, and is making a good faith effort to increase rates and reduce costs to avoid or mitigate default; or (ii) participating in a work out or debt restructuring plan with RUS, either as the borrower being restructured or as a borrower providing assistance as part of the work out or restructuring and stating why the borrower is in default or near default.

(b) *Election of Method of Prepayment.* Prior to requesting RUS to schedule a settlement date, the borrower shall (1) elect whether it will use a private loan, internally generated funds, or a combination of a private loan and internally generated funds to make the prepayment, by completing part C of its Notice of Intent to Prepay the Federal Financing Bank; (2) specify in part C of the Notice of Intent to prepay the Federal Financing Bank a date after which

a prepayment closing may be scheduled; (3) if appropriate, execute the certification set forth in part C of the Notice of Intent to Prepay the Federal Financing Bank; and (4) return a completed copy of the Notice of Intent to Prepay the Federal Financing Bank to the RUS area office.

(c) *Final Documentation.* All documentation in connection with a proposed prepayment made pursuant to this subpart shall have been submitted to RUS in final form, no later than 5 business days prior to the settlement date agreed to by the borrower and RUS. To be considered complete, the final documentation shall include the following material:

(1) A completed copy of the Notice of Intent to Prepay the Federal Financing Bank;

(2) In the event that a borrower proposes to utilize a private loan in connection with a prepayment or a portion of a prepayment,

(i) Evidence, in form and substance satisfactory to RUS, that the borrower has an irrevocable commitment from the lender to close the private loan on the settlement date at an interest rate that meets the requirements of § 1786.28(c)(1);

(ii) Evidence that the lender meets the qualification provisions of § 1786.28(b);

(iii) Evidence that the private loan meets the qualification provisions of § 1786.28(c); and

(iv) The final documentation for the private loan;

(3) Estimate of fees, and expenses, including any taxes, in connection with the prepayment transaction;

(4) A certified copy of a resolution of the board of directors of the borrower approving the certification cited above and requesting RUS approval of the prepayment.

(5) In the case of financially distressed borrowers, evidence in form and substance satisfactory to the Administrator that the benefits of prepayment will not be used to reduce rates and that any Federal or state regulatory body having jurisdiction over the borrower's rates has acknowledged its awareness of this requirement;

(6) In the event that borrower is unable to deliver final documentation or the evidence specified in accordance with, § 1786.31(c), RUS may reschedule the settlement date at its discretion.

(Approved by the Office of Management and Budget under control number 0572–0088)

(c) *Procedure for Submission of Prepayment Applications.* An original and three copies of each initial application must be submitted, between the hours of 8:15 a.m. to 4:45 p.m. Washington, DC time, to: Chief, Communications and Records Management Branch, Administrative Service Division, Rural Utilities Service, U.S. Department of Agriculture, Room 0175 South Agriculture Building, Washington, DC 20250–1500. The outside front of the package containing the prepayment application must be clearly marked, ''FFB PREPAYMENT APPLICATION.'' The Notice of Intent to Prepay the Federal Financing Bank must be the first document in the application package. Upon receipt the prepayment application will be opened, logged in, and the Notice of Intent to Prepay the Federal Financing Bank will be inscribed with the date received by an authorized official of RUS. A copy of the Notice of Intent to Prepay the Federal Financing Bank will then be returned to the borrower to acknowledge receipt of the application. Should an application be submitted other than in accordance with the provisions of § 1786.31, the date received shall be a date determined by RUS in its sole discretion.

§ 1786.32 Settlement procedure.

(a) *General.* Settlements in connection with prepaying FFB loans pursuant to this subpart shall be conducted in accordance with the provisions of this section.

(b) *Settlement Date.* The prepayment will be settled and if a private loan is utilized, the guarantee will be delivered, on a settlement date agreed upon by the borrower and RUS. Prior to scheduling a settlement date for a borrower's prepayment pursuant to this subpart, RUS shall have received the material specified in § 1786.31(b).

(c) *Place of Settlement.* All settlements will take place in Washington, DC, at a location of the borrower's choosing;

provided however, if more than one settlement is proposed for the same settlement date, RUS reserves the right to coordinate the date and location of the settlements with borrowers involved.

(d) *Repayment of FFB.* Prior to 1:00 p.m. prevailing local time in New York, New York, on the settlement date, the borrower shall wire immediately available funds to RUS through the Department of the Treasury account at the Federal Reserve Bank of New York or shall provide for payment to RUS in another manner acceptable to RUS and FFB, in an amount sufficient to pay the outstanding principal of the FFB loan being prepaid plus accrued interest from the last payment date to and including the settlement date.

(e) *Documentation.* The borrower shall deliver, or cause to be delivered to RUS and FFB, not less than 3 business days prior to the settlement date, written notice of the settlement date and a complete listing of each FFB loan advance to be prepaid or partially prepaid, in the format required by § 1786.31(a)(2). In the event that a private loan is used in connection with the prepayment, the following executed documents, opinions and material shall be delivered at the settlement:

(1) The guaranteed note evidencing the private loan.

(2) The guarantee.

(3) The loan guarantee agreement.

(4) Copy of the private loan agreement between the lender and the borrower.

(5) Evidence that the borrower has received all approvals which are required under Federal or state law, loan agreements, security agreements, existing financing arrangements, or any other agreement to which the borrower is a party.

(6) An amendment in recordable form revising the description of the obligations secured by the mortgage including the obligation of the borrower to reimburse RUS for any amounts that RUS may pay under the guarantee.

(7) An approving opinion of the borrower's legal counsel to the effect that the guaranteed note evidencing the private loan is a valid and legally binding obligation of the borrower which is secured under the mortgage, and the priority of the mortgage, as amended pursuant to paragraph (e)(6) of this section, remains undisturbed.

(8) An approving opinion of the lender's legal counsel to the effect that the loan guarantee agreement is a valid and legally binding obligation of the lender.

(9) Such other opinions of counsel as may be required by the Administrator.

(10) Copies of any other documentation required by the lender.

(11) Copies of any other documentation required by RUS to ensure that the obligations of the borrower to reimburse RUS for any amounts that RUS pays under the guarantee or may advance in connection with the private loan are adequately secured under the mortgage.

(Approved by the Office of Management and Budget under control number 0572–0088)

§ 1786.33 Forms.

Guarantees and loan guarantee agreements executed by RUS pursuant to this subpart will be on forms prescribed by RUS. Such forms will include, without limitation, additional details on servicing, procedures for notifying RUS of a default, the manner for requesting payment on a guarantee. The Notice of Intent to Prepay the Federal Financing Bank shall be substantially in the form specified by RUS. RUS may also prescribe standard forms of certifications to be used in connection with materials required to be furnished pursuant to § 1786.31 of this subpart.

§ 1786.34 Access to records of lenders, servicers, and trustees.

The lender, the servicer, or the trustee will permit representatives of RUS (or other agencies of the U.S. Department of Agriculture authorized by that Department) to inspect and make copies of any of their records pertaining to RUS guaranteed loans. Such inspection and copying may be made during regular office hours of the respective party or any other time the party and RUS find convenient.

§ 1786.35 Loss, theft, destruction, mutilation, or defacement of RUS guarantee.

(a) *Authorized representative.* Except where the evidence of debt was or is a bearer instrument, the RUS Administrator is authorized on behalf of RUS to issue a replacement guarantee(s) for one(s) which may have been lost, stolen, destroyed, mutilated, or defaced. Such replacement(s) shall be issued only to the lender or holder and only upon receipt of an acceptable certificate of loss and an indemnity bond.

(b) *Requirements.* When a guarantee(s) is lost, stolen, destroyed, mutilated, or defaced while in the custody of the lender, or holder, the lender will coordinate the activities of the party who seeks the replacement documents and will submit the required documents to RUS for processing. The requirements for replacement are as follows:

(1) A certificate of loss properly notarized which includes:

(i) Legal name and present address of the owner, requesting the replacement forms;

(ii) Legal name and address of lender of record;

(iii) Capacity of person certifying;

(iv) Full identification of the guarantee, including the name of the borrower, date of the guarantee, face amount of the evidence of debt purchased, date of evidence of debt and present balance of the loan. Any existing parts of the documents to be replaced should be attached to the certificate;

(v) A full statement of circumstances of the loss, theft, or destruction of the guarantee; and

(vi) The lender or holder, shall present evidence demonstrating current ownership of the guarantee and note. If the present holder is not the same as the original lender, a copy of the endorsement of each successive holder in the chain of transfer from the initial private lender to present holder shall be included. If copies of the endorsement cannot be obtained, best available records of transfer shall be presented to RUS (e.g., order confirmation, cancelled checks, etc).

(2) An indemnity bond acceptable to RUS shall accompany the request for replacement except when the holder is the United States, a Federal Reserve Bank, a Federal Government Corporation, a state or territory, or the District of Columbia. The bond may be with or without surety. The bond shall be with surety except when the outstanding principal balance and accrued interest due the present holder is less than $1,000,000 verified by the lender in writing in a letter of certification of balance due. The surety shall be a qualified surety company holding a certificate of authority from the Secretary of the Treasury and listed in Treasury Department Circular 580.

(3) All indemnity bonds shall be issued and/or payable to the United States of America acting through the Administrator of the Rural Utilities Service. The bond shall be in an amount not less than the unpaid principal and interest. The bond shall save RUS harmless against any claim or demand which might arise or against any damage, loss, costs, or expenses which might be sustained or incurred by reasons of the loss or replacement of the instruments.

§ 1786.36 Other prepayments.

Nothing contained in this subpart shall prohibit a borrower from making prepayments of FFB loans in accordance with the terms thereof.

§ 1786.37 Application of regulation to previous prepayments.

Nothing contained in this subpart shall affect the validity of prepayments made or guarantees issued pursuant to previous regulations. Those borrowers, however, that completed a prepayment pursuant to section 306(A) of the RE Act and closed loans prior to February 27, 1988, may, in their discretion request RUS approval and if required by prior regulations the concurrence of the Secretary of the Treasury, of any amendments necessary to make the terms and conditions of such loans consistent with, or to consolidate such loans with, loans guaranteed under these regulations.

§ 1786.38 Judicial review.

This subpart is intended to set forth RUS policies and procedures for the orderly administration of the provisions of section 306(A) of the RE Act, section

633 of the continuing resolution, and section 637 of the 1989 Appropriations Act and is not intended to create any right or benefit, substantive or procedural, enforceable at law by a party against the United States, its agencies, its officers or any person.

§§1786.39—1786.49 [Reserved]

Subpart C—Special Discounted Prepayments on RUS Direct/Insured Loans

AUTHORITY: 7 U.S.C. 901–950b; Title I, Subtitle B, Pub. L. 99–509; Pub. L. 103–354, 108 Stat. 3178 (7 U.S.C. 6941 *et seq.*).

SOURCE: 51 FR 46999, Dec. 29, 1986, unless otherwise noted. Redesignated at 55 FR 49250, Nov. 27, 1990.

§1786.50 Purpose.

This subpart sets forth the policies and procedures of RUS whereby electric and telephone borrowers may prepay outstanding RUS Notes at the Discounted Present Value of the RUS Notes with private financing.

§1786.51 Definitions.

As used in this subpart:

Act means the Rural Electrification Act of 1936, as amended (7 U.S.C. 901 *et seq.*).

Administrator means the Administrator of RUS.

Discounted Present Value shall have the meaning specified in §1786.53

Fund means the Rural Electrification and Telephone Revolving Fund established pursuant to the Act.

REA means the Rural Electrification Administration formerly an agency of the United States Department of Agriculture and predecessor agency to RUS with respect to administering certain electric and telephone loan programs.

RUS means the Rural Utilities Service, an agency of the Unites States Department of Agriculture, established pursuant to Section 232 of the Federal Crop Insurance Reform and Department of Agriculture Reorganization Act of 1994 (Pub. L. 103–354, 108 Stat. 3178), successor to REA with respect to administering certain electric and telephone programs. See 7 CFR 1700.1.

RUS Loan Agreement means the agreement between the borrower and RUS providing for loans pursuant to the Act.

RUS Notes means those notes, bonds or other obligations evidencing indebtedness created by loans made pursuant to Titles I, II or III of the Act (7 U.S.C. 901–940).

[51 FR 46999, Dec. 29, 1986. Redesignated at 55 FR 49250, Nov. 27, 1990, as amended at 59 FR 66441, Dec. 27, 1994]

§1786.52 Prepayment.

Through September 30, 1987, the Administrator may, pursuant to this subpart, permit eligible electric and telephone borrowers to prepay all outstanding RUS Notes issued or assumed by such borrowers and held in the Fund, upon paying the lesser of the outstanding balance or the Discounted Present Value.

§1786.53 Discounted present value.

The Discounted Present Value shall be calculated five business days before prepayment is made by summing the present values of all remaining payments by using the following formula:

$$\text{Present Value} = \sum_{k=1}^{n} \frac{P_k}{\prod_{i=1}^{k}\left[1.0 + \left\langle \frac{D1_i}{365} + \frac{D2_i}{366} \right\rangle \times I\right]}$$

Where:

P_k=Total payment including interest, due on the kth payment date following the prepayment date.

n=Total number of remaining payments dates.

I=The discount rate, in decimals, which shall be the average rate on utility bonds bearing a rating of ''Aa'' as set forth in that issue of Moody's Public Utility News Reports most recently published prior to the date on which Discounted Present

Value is calculated.

$D1_i$=Number of days in the ith payment period that are in a non-leap year (365 day year).

$D2_i$=Number of days in the ith payment period that are in a leap year (366 day year).

§ 1786.54 Eligibility criteria.

To be eligible to prepay RUS Notes at the Discounted Present Value a borrower must comply with the following criteria:

(a) The borrower must be current on all payments due on its outstanding RUS Notes and all other payment obligations owed to RUS and the Rural Telephone Bank.

(b) The borrower must agree to prepay all of its outstanding RUS Notes.

(c) The borrower must identify the source of private financing that will be used to refinance its outstanding RUS Notes, which financing may not include obligations the income of which is exempt from taxation under the Internal Revenue Code of 1986.

(d) The borrower must have expended all funds advanced on account of the RUS Notes for the purposes for which such funds were advanced.

(e) The borrower must agree to a rescission of the unadvanced balance of the RUS Notes.

(f) The borrower must agree that the borrower, its successors or assigns, shall pay to the Government, as a condition of receiving additional loans or loan guarantees pursuant to Titles I, II and III of the Act, an amount equal to the aggregate of the difference with respect to each of the RUS Notes between the amount outstanding on the RUS Note and the Discounted Present Value of the RUS Note upon prepayment with interest accruing quarterly; the interest rates shall be the rates provided in the respective RUS Notes.

(g) If the borrower is a party to a wholesale power contract with a power supplier financed pursuant to the Act, the borrower must provide the Administrator with such assurances as the Administrator may request that it will meet its obligations to the power supplier.

§ 1786.55 Application procedure.

Any borrower seeking to prepay its RUS Notes under this subpart should apply to the appropriate RUS Area Director by submitting:

(a) A board resolution that:

(1) Requests approval of the prepayment of the borrower's outstanding RUS Notes, and

(2) States the intent of the borrower to comply with all eligibility criteria set forth in § 1786.54 of this subpart.

(b) A list of all RUS Notes together with the outstanding amount on such notes.

(c) Such additional information as the Administrator shall request.

§ 1786.56 Approval of applications.

The applications will ordinarily be reviewed and, if satisfactory, approved, and closing schedule based on the order in which executed prepayment agreements are received. The Administrator may limit the number of applications approved and closings scheduled from time to time taking into account, among other matters, the financial interests and administrative considerations of the Government.

§ 1786.57 Prepayment agreement.

Upon approving an application for prepayment under this subpart, the Administrator shall notify the borrower and deliver to the borrower for its execution a prepayment agreement which shall set forth and provide:

(a) The RUS Notes to be prepaid and when the Discounted Present Value will be calculated.

(b) The place and conditions for closing.

(c) Agreement that the unadvanced balance of RUS Notes shall be rescinded.

(d) Agreement that the borrower, or its successors or assigns, shall pay to the Government, as a condition of receiving additional loans or loan guarantees pursuant to Titles I, II and III of the Act, an amount equal to the aggregate of the difference with respect to each of the RUS Notes between the amount outstanding on the RUS Note and the Discounted Present Value of the RUS Note upon prepayment with interest accruing quarterly; the interest rates shall be the rates provided in the respective RUS Notes.

(e) Assurances that the borrower will meet its obligations to any power supplier financed pursuant to the Act.

(f) Such other terms and conditions as the Administrator deems appropriate.

§ 1786.58 Security.

If, after prepayment of RUS Notes, the Government should continue to hold liens on the borrower's property that secure loans made or guaranteed pursuant to the Act, the Administrator of RUS or the Governor of the Rural Telephone Bank, as the case may be, will consider request for the accommodation of such liens for the purpose of providing security for loans the proceeds of which were used to prepay RUS Notes. Such lien accommodations shall be limited in amount to the Discounted Present Value of the RUS Notes plus such costs, as the Administrator shall determine to be reasonable, incurred by the borrower in obtaining such loans.

§ 1786.59 Loan fund audit.

Within 6 months of closing RUS shall have the right to audit transactions involving the RUS construction fund established and maintained by the borrower pursuant to the terms of the RUS Loan Agreement and to inspect all books, records, accounts and other documents and papers of the borrower. Should RUS determine that the borrower has made disbursements of funds advanced pursuant to RUS Notes which do not comply with the requirements of the RUS Loan Agreement, the borrower shall be required to pay to the Government an amount equal to the difference between the amount which the borrower prepaid on such RUS Notes evidencing RUS loan funds which were improperly disbursed and the amount which the borrower would otherwise have been required to return to the Government as a result of noncompliance if the borrower had not prepaid such RUS Notes. (See 7 CFR part 1721)

§ 1786.60 Closing.

(a) The borrower shall be responsible for obtaining all approvals necessary to consummate the transaction as required by the prepayment agreement including such approvals as may be required by regulatory bodies and other lenders.

(b) The RUS Notes shall be prepaid at a closing to be held in accordance with the prepayment agreement; *Provided, however,* That no closing may be scheduled for after September 30, 1987. At closing, a borrower shall prepay the RUS Notes by paying to the Government an amount equal to the Discounted Present Value of the RUS Notes. The closing shall otherwise be conducted as prescribed in the prepayment agreement.

§ 1786.61 Other prepayments.

RUS loan documentation generally permits borrowers to prepay RUS Notes by paying the outstanding balance due thereon. Nothing in this subpart shall prohibit any borrower from prepaying its outstanding RUS Notes in accordance with the terms thereof. The provisions of this subpart shall not be applicable to such prepayment.

§§ 1786.62—1786.74 [Reserved]

Subpart D [Reserved]

Subpart E—Discounted Prepayments on RUS Notes in the Event of a Merger of Certain RUS Electric Borrowers

SOURCE: 56 FR 37268, Aug. 6, 1991, unless otherwise noted.

§ 1786.95 Purpose.

This subpart sets forth the policies and procedures of RUS whereby certain electric borrowers may prepay outstanding RUS Notes at the Discounted Present Value of the RUS Notes with private financing.

§ 1786.96 Definitions.

As used in this subpart:

Act means the Rural Electrification Act of 1936, as amended (7 U.S.C. 901 *et seq.*).

Administrator means the Administrator of RUS.

Consolidation means:

(1) The combination, pursuant to state law, of two or more borrower or nonborrower organizations into a new

successor organization that takes over the assets and assumes the liabilities of those organizations; or

(2) Any other transaction including an acquisition which has substantially the same effect.

Discounted Present Value shall have the meaning specified in § 1786.98.

Fund means the Rural Electrification and Telephone Revolving Fund pursuant to the Act.

Merger means:

(1) The combination, pursuant to state law, of two or more borrower or nonborrower organizations into an existing survivor organization that takes over the assets and assumes the liabilities of the merged organizations; or

(2) Any other transaction including an acquisition which has substantially the same effect.

REA means the Rural Electrification Administration formerly an agency of the United States Department of Agriculture and predecessor agency to RUS with respect to administering certain electric and telephone loan programs.

RUS means the Rural Utilities Service, an agency of the United States Department of Agriculture established pursuant to Section 232 of the Federal Crop Insurance Reform and Department of Agriculture Reorganization Act of 1994 (Pub. L. 103–354, 108 Stat. 3178), successor to REA with respect to administering certain electric and telephone programs. See 7 CFR 1700.1.

RUS Loan Agreement means the agreement between the borrower and RUS providing for loans pursuant to the Act.

RUS Notes means those notes, bonds or other obligations evidencing indebtedness created by loans made or guaranteed by RUS pursuant to titles I and III of the Act (7 U.S.C. 901–940).

[56 FR 37268, Aug. 6, 1991, as amended at 59 FR 66440, Dec. 27, 1994]

§ 1786.97 Prepayment.

There were 29 former RUS electric borrowers that prepaid their direct or insured loans under section 306B(a) of the Act prior to October 1, 1987. (See subpart C of this part.) These borrowers are listed in appendix A to subpart E of this part. Any RUS electric borrower which is the result of a merger or consolidation involving any of these 29 former borrowers and a borrower with outstanding Notes may, after meeting all requirements of this subpart, prepay all outstanding RUS Notes issued or assumed by the borrower upon paying the lesser of the outstanding balance or the Discounted Present Value. Such prepayment must be made not later than one year after the effective date of the merger or consolidation.

§ 1786.98 Discounted present value.

(a) The Discounted Present Value shall be calculated by RUS before prepayment is made by summing the present values of all remaining payments on all outstanding notes according to the following formula to compute the discounted present value of each note and adjusting as here and after provided for tax exempt financing.

$$\text{Present Value} = \sum_{k=1}^{n} \frac{P_k}{\prod_{i=1}^{k}\left[1.0 + \left\langle \frac{D1_i}{365} + \frac{D2_i}{366} \right\rangle \times I\right]}$$

Where:

P_k=Total payment, including interest, due on the kth payment date following the prepayment date. n=Total number of remaining payment dates. I=The discount rate applied to each transaction will be ascertained by using data specified in the ''Federal Reserve Statistical Release'' which is published each Monday. (See appendix B to subpart E of this part.) The specific discount rate will be the discount rate(s) specified in the ''Treasury Constant Maturities'' section of this publication eight working days prior to the closing. In applying the discount rate, the 1-year Treasury rate will be used for all notes with a remaining term of less

than 2 years; the 2-year Treasury rate for notes with maturities between 2 and 3 years; the 3-year Treasury rate for all notes with maturities between 3 and 5 years; the 5-year Treasury rate for all notes with maturities between 5 and 7 years; the 7-year Treasury rate for all notes with maturities between 7 and 10 years; the 10-year Treasury rate for all notes with maturities between 10 and 30 years; and the 30-year Treasury rate for all notes with maturities longer than 30 years.

$D1_i$=Number of days in the ith payment period that are in a non-leap year (365 day year).

$D2_i$=Number of days in the ith payment period that are in a leap year (366 day year).

(b) Notwithstanding paragraph (a) of this section, in the event that the borrower shall elect to prepay using tax exempt financing, the calculation of the Discounted Present Value shall be adjusted to make the discount the equivalent of fully taxable financing.

§1786.99 Eligibility criteria.

To be eligible to prepay RUS Notes at the Discounted Present Value, a borrower must comply with the following criteria:

(a) The borrower must be current on all payments due on its outstanding RUS Notes and all other payment obligations owed to RUS;

(b) The borrower must agree to prepay all of its outstanding RUS Notes;

(c) The borrower must identify the source of financing that will be used directly or indirectly to refinance its outstanding RUS Notes. The borrower must certify in writing whether such financing will be tax exempt and, if so, shall furnish all information on the financing as RUS may request to enable RUS to adjust the discount to the equivalent to fully taxable financing;

(d) The borrower must have expended all funds advanced on account of the RUS Notes for the purposes for which such funds were advanced or repaid RUS for all unexpended funds;

(e) The borrower must agree to a rescission of the unadvanced balance of any RUS Notes outstanding as of the date of its application for prepayment;

(f) The borrower must agree that the borrower, its successors and assigns, shall pay to the Government, as a condition of receiving additional loans or loan guarantees pursuant to titles I and III of the Act, an amount equal to the aggregate of the difference with respect to each of the RUS Notes between the amount outstanding on the RUS Note and the Discounted Present Value of the RUS Note upon prepayment with interest accruing quarterly; the interest rates shall be the rates provided in the respective Notes; and

(g) If the borrower is a party to a wholesale power contract with a power supplier financed pursuant to the Act, the borrower must provide the Administrator with such assurances as the Administrator may request that it will meet its obligations to the power supplier. The borrower must also specifically agree to the following limitation: The borrower agrees that, for so long as the Wholesale Power Contract shall be in effect between the borrower and the power supplier, the borrower will not, without the approval in writing of the power supplier and the Administrator, take or suffer to be taken any steps for reorganization or to consolidate with or merge into any corporation or any other public power district, or to sell, lease or transfer (or make any agreement therefor) all or a substantial portion of its assets, whether now owned or hereafter acquired. Notwithstanding the foregoing, the borrower may take or suffer to be taken any steps for reorganization or to consolidate with or merge into any corporation or any other public power district, or to sell, lease or transfer (or make any agreement therefor) all or a substantial portion of its assets, whether now owned or hereafter acquired, so long as the borrower shall pay such portion of the outstanding indebtedness evidenced by the power supplier's Notes at the time outstanding as shall be determined by the power supplier with the prior written consent of the Administrator and shall otherwise comply with such reasonable terms and conditions as the Administrator and the Power Supplier shall require.

§1786.100 Application procedure.

Any borrower seeking to prepay its RUS Notes under this Subpart should apply to the appropriate RUS Area Director not less than 60 days prior to one year after the effective date of the merger or consolidation by submitting:

(a) A board resolution that:

(1) Requests approval of the prepayment of the borrower's outstanding RUS Notes;

(2) States the intent of the borrower to comply with all eligibility criteria set forth in § 1786.99 of this subpart; and

(3) Identifies the source of financing.

(b) A list of all RUS Notes together with the outstanding amount on such notes.

(c) An opinion of counsel as to the effective date of the merger or consolidation.

(d) Such additional information as the Administrator will request.

§ 1786.101 Approval of application.

The applications will be reviewed and, if satisfactory, approved. Closing will be scheduled upon approval.

§ 1786.102 Prepayment agreement.

Upon approving an application for prepayment under this subpart, the Administrator shall notify the borrower and deliver to the borrower for its execution a prepayment agreement which shall set forth and provide:

(a) The RUS Notes to be prepaid and when the Discounted Present Value will be calculated.

(b) The place, date and conditions for closing.

(c) Agreement that the unadvanced balance of RUS Notes shall be rescinded.

(d) Agreement that the borrower, or its successors or assigns, shall pay to the Government, as a condition of receiving additional loans or loan guarantees pursuant to titles I and III of the Act, an amount equal to the aggregate of the difference with respect to each of the RUS Notes between the amount outstanding on the RUS Note and the Discounted Present Value of the prepaid RUS Note; with interest accruing quarterly. The interest rates shall be the rates provided in the respective RUS Notes.

(e) Assurances that the borrower will meet its obligations to any power supplier financed pursuant to the Act.

(f) Such other terms and conditions as the Administrator deems appropriate.

§ 1786.103 Security.

If, after prepayment of RUS Notes, the Government should continue to hold liens on the borrower's property, the Administrator of RUS will consider a request for the accommodation of such liens for the purpose of providing security for loans the proceeds of which were used to prepay RUS Notes. Such lien accommodations shall be limited in amount to the Discounted Present Value of the RUS Notes plus such costs, as the Administrator shall determine to be reasonable, incurred by the borrower in obtaining such loans.

§ 1786.104 Loan fund audit.

RUS shall have the right to audit within 6 months of closing, transactions involving the RUS construction fund established and maintained by the borrower pursuant to the terms of the RUS Loan Agreement and to inspect all books, records, accounts and other documents and papers of the borrower. Should RUS determine that the borrower has made disbursements of funds advanced pursuant to RUS Notes which do not comply with the requirements of the RUS Loan Agreement, the borrower shall be required to pay the Government an amount equal to the difference between the amount which the borrower prepaid on such RUS Notes evidencing RUS loans funds which were improperly disbursed and the amount which the borrower would otherwise have been required to return to the Government as a result of noncompliance if the borrower had not prepaid such RUS Notes. (See 7 CFR part 1721, Post-Loan Policies and Procedures for Insured Electric Loans.)

§ 1786.105 Closing.

(a) The borrower shall be responsible for obtaining all approvals necessary to consummate the transaction as required by the prepayment agreement, including such approvals as may be required by regulatory bodies and other lenders.

(b) The RUS Notes shall be prepaid at a closing to be held in accordance with the prepayment agreement. RUS shall designate the date of closing which in no event shall be later than one year after the effective date of the merger

or consolidation. At closing, in addition to paying all current interest due on the date of prepayment, a borrower shall prepay the RUS Notes by paying to the Government an amount equal to the lesser of the outstanding balance or the Discounted Present Value of the RUS Notes. The closing shall otherwise be conducted as prescribed in the prepayment agreement.

§ 1786.106 Other prepayments.

RUS loan documentation generally permits borrowers to prepay RUS Notes by paying the outstanding balance due thereon. Nothing in this subpart shall prohibit any borrower from prepaying its outstanding RUS Notes in accordance with the terms thereof. The provisions of this subpart shall not be applicable to such prepayment.

APPENDIX A TO SUBPART E TO PART 1786—LISTING OF ELIGIBLE BORROWERS

State	Borrower name and address
Colorado	Colorado-Ute Electric Assn., Inc., Montrose.
Florida	Lee County Electric Coop. Inc., North Fort Myers.
Indiana	Clark County Rural Elec. Memb. Corp., Sellersburg.
Louisiana	Beauregard Electric Cooperative, Inc., Deridder.
Missouri	Culvre River Electric Cooperative, Inc., Troy.
Nebraska	Roosevelt Public Power District, Mitchell.
Nebraska	Howard Greely Rural Public Power Dist., St. Paul.
Nebraska	Cuming County Public Power District, West Point.
Nebraska	York County Rural Public Power District, York.
Nebraska	Elkhorn Rural Public Power District, Battle Creek.
Nebraska	Southern Nebraska Rural P. P. D., Grand Island.
Nebraska	McCook Public Power District, McCook.
Nebraska	Niobrara Valley Electric Memb. Corp., O'Neill.
Nebraska	Cornhusker Public Power District, Columbus.
Nebraska	Custer Public Power District, Broken Bow.
Nebraska	Northwest Rural Public Power Dist., Hay Springs.
Nebraska	Southwest Public Power District, Palisade.
Nebraska	Loup Valleys Rural Public Power District, Ord.
Nebraska	South Central Public Power District, Nelson.
Oklahoma	Peoples' Electric Cooperative, Ada.
Texas	Deaf Smith County Electric Coop. Inc., Hereford.
Texas	Pedernales Electric Coop. Inc., Johnson City.
Texas	Bandera Electric Cooperative, Inc., Bandera.
Texas	Guadalupe Valley Electric Coop., Inc., Gonzales.
Texas	Bluebonnet Electric Cooperative, Inc., Giddings.
Texas	Cap Rock Electric Cooperative, Inc. Stanton.
Texas	San Bernard Electric Cooperative, Inc., Bellville.
Washington	Inland Power & Light Company, Spokane.
Washington	Pub. Util. Dist. No. 1 Grays Harbor Co., Aberdeen.

APPENDIX B TO SUBPART E TO PART 1786—FEDERAL RESERVE STATISTICAL RELEASE

FEDERAL RESERVE STATISTICAL RELEASE

These data are released each Monday. The availability of the release will be announced when the information is available, on (202) 452–3206.

H. 15 (519)

For immediate release February 4, 1991.

SELECTED INTEREST RATES

[Yields in percent per annum]

Instruments	1991 Jan. 28	1991 Jan. 29	1991 Jan. 30	1991 Jan. 31	1991 Feb. 1	This week	Last week	1991 Jan.
Federal Funds (effective)[1 2 3]	7.61	7.16	6.96	8.18	6.30	7.46	6.88	6.91
Commercial paper[3 4 5]								
1-Month	6.88	6.96	6.95	6.99	6.73	6.90	6.83	7.12
3-Month	6.92	6.96	6.94	6.95	6.67	6.89	6.92	7.10
6-Month	6.87	6.91	6.88	6.88	6.58	6.82	6.86	7.02
Finance paper placed directly[3 4 6]								
1-Month	6.76	6.85	6.83	6.83	6.55	6.76	6.68	6.95
3-Month	6.75	6.83	6.83	6.76	6.46	6.73	6.77	6.92
6-Month	6.53	6.53	6.59	6.53	6.19	6.47	6.55	6.59
Bankers acceptances (top rated)[3 4 7]								
3-Month	6.80	6.82	6.77	6.68	6.30	6.67	6.76	6.96

SELECTED INTEREST RATES—Continued

[Yields in percent per annum]

Instruments	1991 Jan. 28	1991 Jan. 29	1991 Jan. 30	1991 Jan. 31	1991 Feb. 1	This week	Last week	1991 Jan.
6-Month	6.67	6.70	6.65	6.55	6.15	6.54	6.63	6.84
CDS (secondary market)[3 8]								
1-Month	6.78	6.85	6.87	6.82	6.52	6.77	6.77	7.10
3-Month	6.94	6.95	6.93	6.88	6.51	6.84	6.94	7.17
6-Month	6.95	6.98	6.95	6.88	6.51	6.85	6.97	7.17
Eurodollar deposits (London)[3 9]								
1-Month	6.81	6.88	6.88	6.88	6.88	6.86	6.81	7.13
3-Month	6.94	7.06	7.00	6.94	6.94	6.98	7.01	7.23
6-Month	7.00	7.00	7.00	6.94	6.94	6.98	7.04	7.23
Bank prime loan[2 3 10]	9.50	9.50	9.50	9.50	9.50	9.50	9.50	9.52
Discount window borrowing[2 11]	6.50	6.50	6.50	6.50	6.00	6.50	6.50	6.50
U.S. Government securities								
Treasury bills								
Auction average[3 4 12]								
3-Month	6.22	.....	.....	.....	.....	6.22	6.14	6.30
6-Month	6.28	.....	.....	.....	.....	6.28	6.21	6.34
1-Year	.....	.....	.....	.....	.....	.....	.....	6.22
Auction average (investment)[12]								
3-Month	6.41	.....	.....	.....	.....	6.41	6.32	6.49
6-Month	6.58	.....	.....	.....	.....	6.58	6.50	6.64
Secondary market[3 4]								
3-Month	6.25	6.22	6.20	6.19	6.00	6.17	6.12	6.22
6-Month	6.26	6.26	6.24	6.20	5.97	6.19	6.20	6.28
1-Year	6.24	6.20	6.17	6.13	5.91	6.13	6.19	6.25
Treasury Constant maturities[13]								
1-Year	6.64	6.59	6.56	6.51	6.27	6.51	6.58	6.64
2-Year	7.12	7.10	7.07	7.05	6.83	7.03	7.09	7.13
3-Year	7.38	7.35	7.34	7.30	7.10	7.29	7.35	7.38
5-Year	7.67	7.64	7.64	7.62	7.45	7.60	7.66	7.70
7-Year	7.93	7.90	7.90	7.89	7.75	7.87	7.92	7.97
10-Year	8.06	8.05	8.05	8.03	7.91	8.02	8.04	8.09
30-Year	8.23	8.20	8.23	8.21	8.09	8.19	8.22	8.27
Composite								
Over 10 years (long-term)[14]	8.29	8.26	8.29	8.27	8.15	8.25	8.28	8.33
Corporate bonds								
Moody's Seasoned								
AAA	9.03	9.01	9.00	8.99	8.96	9.00	9.05	9.04
BAA	10.43	10.37	10.35	10.33	10.24	10.34	10.44	10.45
A-Utility[15]	.....	.....	.....	.....	9.65	9.65	9.80	9.83
State and local bonds[16]	.....	.....	.....	7.00	.....	7.00	7.06	7.08
Conventional mortgages[17]	.....	.....	.....	.....	9.56	9.56	9.61	9.64

Footnotes:

[1] The daily effective federal funds rate is a weighted average of rates on trades through N.Y. brokers.

[2] Weekly figures are averages of 7 calendar days ending on Wednesday of the current week; monthly figures include each calendar day in the month.

[3] Annualized using a 360-day year or bank interest.

[4] Quoted on a discount basis.

[5] An average of offering rates on commercial paper placed by several leading dealers for firms whose bond rating is AA or the equivalent.

[6] An average of offering rates on paper directly placed by finance companies.

[7] Representative closing yields for acceptances of the highest rated money center banks.

[8] An average of dealer offering rates on nationally traded certificates of deposit.

[9] Bid rates for Eurodollar deposits at 11 a.m. London time.

[10] One of several base rates used by banks to price short-term business loans.

[11] Rate for the Federal Reserve Bank of New York.

[12] Auction date for daily data; weekly and monthly averages computed on an issue-date basis.

[13] Yields on actively traded issues adjusted to constant maturities. Source: U.S. Treasury.

[14] Unweighted average of rates on all outstanding bonds neither due nor callable in less than 10 years, including one very low yielding ''flower'' bond.
[15] Estimate of the yield on a recently offered, A-rated utility bond with a maturity of 30 years and call protection of 5 years; Friday quotations.
[16] Bond buyer Index, general obligation, 20 years to maturity, mixed quality; Thursday quotations.
[17] Contract interest rates on commitments for fixed-rate first mortgages. Source: FHLMC.
NOTE: Weekly and monthly figures are averages of business days unless otherwise noted.

Description of the Treasury Constant Maturity Series

Yields on Treasury securities at ''constant maturity'' are interpolated by the U.S. Treasury from the daily yield curve. This curve, which relates the yield on a security to its time to maturity, is based on the closing market bid yields on actively traded Treasury securities in the over-the-counter market. These market yields are calculated from composites of quotations reported by five leading U.S. Government securities dealers to the Federal Reserve Bank of New York. The constant maturity yield values are read from the yield curve at fixed maturities, currently 1, 2, 3, 5, 7, 10, and 30 years. This method provides a yield for a 10-year maturity, for example, even if no outstanding security has exactly 10 years remaining to maturity.

Subpart F—Discounted Prepayments on RUS Electric Loans

AUTHORITY: 7 U.S.C. 901 *et seq.*; Pub. L. 103–354, 108 Stat. 3178 (7 U.S.C. 6941 *et seq.*).

SOURCE: 59 FR 13620, Mar. 22, 1994, unless otherwise noted.

§1786.150 Purpose.

This subpart sets forth the policies and procedures of RUS whereby borrowers may prepay, with private financing or internally generated funds, outstanding RUS Notes evidencing electric loans at the Discounted present value of the RUS Notes, pursuant to the provisions of section 306(B) of the RE Act as amended by Public Law 102–428, 106 Stat. 2183, adopted October 21, 1992.

§1786.151 Definitions and rules of construction.

(a) *Definitions.* As used in this subpart:

Administrator means the Administrator of the Rural Utilities Service (RUS).

Borrower means any organization which has an outstanding note(s) evidencing electric loans made by RUS, or has previously prepaid such notes under subparts C and E of this part.

Business day means any day on which both the RUS and the Federal Reserve Bank of New York are open for business.

Construction Fund Account means the Cash—Construction Fund—Trustee Account, maintained by the borrower pursuant to the terms of the outstanding RUS Loan Contract.

Closing shall mean one of the several contemplated closings of the prepayment of the Qualified Notes prescribed by the Prepayment agreement.

Closing date shall mean any business day identified as such by the Government in its preclosing notice delivered to the Company pursuant to §1786.158.

Closing request shall mean a request by the borrower of the Government to schedule a closing for certain Qualified Notes on the date requested therein.

Direct loan means a loan made pursuant to section 4 of the RE Act.

Discounted present value shall have the meaning set forth in §1786.153.

Distribution borrower means a borrower that sells electric power and energy at retail in rural areas.

Electric loan means a Direct loan or an Insured loan made for the purpose of furnishing electric energy to persons in rural areas.

Final maturity means the final date on which all outstanding principal and accrued interest on an electric loan is due and payable.

Government means the United States of America, acting through the Administrator of the Rural Utilities Service.

Insured loan means a loan made pursuant to Section 305 of the RE Act.

Lien accommodation means the sharing of the Government's (RUS's) lien on property, usually all property, covered by the lien of the RUS Mortgage.

Loan guarantee means a loan guarantee under Section 306 of the RE Act.

Power supply borrower means a borrower that sells or intends to sell electric power at wholesale to distribution or power supply borrowers pursuant to RUS wholesale power contracts.

Preclosing notice shall mean a notice delivered by the Government to the borrower in response to a closing request, identifying the closing date, the Qualified Notes to be prepaid at such closing and documents to be delivered by the borrower to the Government prior to the closing date.

Prepayment agreement shall have the meaning set forth in § 1786.158.

Qualified Notes shall have the meaning set forth in § 1786.154.

RE Act means the Rural Electrification Act of 1936, as amended (7 U.S.C. 901 *et seq.*).

RUS means the Rural Utilities Service, an agency of the United States Department of Agriculture.

RUS Loan Contract means the agreement, as amended, supplemented, or restated from time to time, between a borrower and RUS providing for loans or loan guarantees pursuant to the RE Act.

RUS Mortgage means collectively those mortgages and security agreements made by and among the borrower, the Government, and third parties, if any, securing indebtedness evidencing electric loans or loan guarantees made pursuant to the RE Act.

Rural development loans means loans or grants made pursuant to Rural development programs.

Rural development programs means loan or grant programs under the authority of the Administrator pursuant to sections 313, 501, and 502 of the RE Act.

Supplemental lender means a private lender whose loan to the borrower is secured by the RUS mortgage.

Tax exempt financing means borrowing evidenced by bonds, notes and other evidence of indebtedness the income of which is excluded from gross income for the purposes of Chapter 1 of the Internal Revenue Code of 1986 (26 U.S.C. ch. 1).

(b) *Rules of construction.* Unless the context shall otherwise indicate, the terms defined in paragraph (a) of this section include the plural as well as the singular, and the singular as well as the plural.

§ 1786.152 Prepayments of RUS loans.

An electric loan made under the RE Act shall not be sold or prepaid at a value that is less than the outstanding principal balance, except that, on request of a borrower, an electric loan made under the RE Act, or a portion of such a loan, that was advanced before May 1, 1992, or has been advanced for not less than 2 years, shall be prepaid by the borrower at the lesser of the outstanding principal balance of the loan or the discounted present value thereof.

§ 1786.153 Discounted present value.

(a) The discounted present value shall be calculated by summing the present values of all remaining payments on all Qualified Notes to be prepaid according to the following formula and adjusted as provided in paragraph (b) of this section if tax exempt financing is used.

$$\text{Present Value} = \sum_{k=1}^{n} \frac{P_k}{\prod_{i=1}^{k}\left[1.0 + \left(\frac{D1_i}{365} + \frac{D2_i}{366}\right)I\right]}$$

Where:

The Greek letter, Sigma (Σ) means the sum of the following terms.

The Greek letter, Pi (Π) means the product of the following terms.

P_k=Total payment, including interest due on the Kth payment date following the prepayment date.

n=Total number of remaining payment dates to final maturity.

$D1_i$=Number of days in the ith payment period that are in a non-leap year (365-day year).

$D2_i$=Number of days in the ith payment period that are in a leap year (366-day year).

I=The discount rate applied to each transaction ascertained by using data specified in the ''Federal Reserve Statistical Release'' (H.15 (519)), which is published each Monday. The availability of this Release will be announced when the information is available by telephone on (202) 452–3206. See adjustment for tax exempt refinancing at paragraph (b) of this section. The specific discount rate will be based on the discount rate(s) specified in the ''Treasury Constant Maturities'' section of this publication 8 business days prior to the closing and will be interpolated from that information as follows:

Remaining final maturity of RUS loan:		Treasury constant maturities
At least	But less than	
# years	# years	
0	2	1-year.
2	3	2-year.
3	4	3-year.
4	5	(1)
5	6	5-year.
6	7	(2)
7	8	7-year.
8	9	(3)
9	10	(3)
10	11	10-year.
11	20	(4)
20	21	20-year.
21	30	(5)
30	36	30-year.

Notes: [1] The arithmetic mean between the 3-year. and 5-year. Treasury Constant Maturities; i.e., if 3-year. rate is 3.00% and the 5-year. rate is 4.00% then the rate used would be 3.5%.

[2] The arithmetic mean between the 5-year and 7-year Treasury Constant Maturities computed as above.

[3] A straight line interpolated rate between the 7-year rate and the 10-year rate. (See formula below)

[4] A straight line interpolated rate between the 10-year note and the 20-year Bond rate. (See formula below)

[5] A straight line interpolated rate between the 20-year bond and the 30-year bond using the following formula:

$$I = B + \frac{((C - E) \times (A - B))}{F - E}$$

Where:

I=The discount rate interpolated from the cost of money to the Treasury.

A=The Treasury interest rate for the most recently published maturity (in years) that is the shortest Treasury term (in years) which is greater than the borrower's remaining term (in years) to final maturity; i.e., (if the note to be prepaid has a final maturity of more than 10 years then this rate is the 20-year Treasury rate)

B=The Treasury interest rate for the most recently published maturity (in years) that is the longest Treasury term (in years) which is less than the borrower's remaining term (in years) to final maturity; i.e., (if the note to be prepaid has a final maturity of more than 10 years but less than 20 years then this term is the 10-year Treasury rate)

C=The remaining number of full years to the final maturity of the borrower's note. Drop all fractions of a year and use the remaining full years.

E=The published Treasury term (in years) to maturity which is the longest term to maturity for the published term that is less than the remaining term (in years) to final maturity of the borrower's note; i.e., (if the note to be prepaid has remaining years to maturity between 11 and 20 years then this term would be 10 or if the note to be prepaid has remaining years to maturity between 21 years and 30 years then this term would be 20).

F=The published Treasury term (in years) to maturity which is the shortest term to maturity for the published term that is greater than the remaining term (in years) to maturity of the borrower's note; i.e., (if the note to be prepaid has remaining years to maturity between 11 and 20 years then this term would be 20 or if the remaining years to maturity is between 21 and 30 years then this term would be 30).

NOTE: The percentage terms used in the above formula will be truncated to two decimal places. For the purpose of the terms A, B, E, and F above the published Treasury rate and term shall mean the Treasury Constant Maturities from the Federal Reserve Statistical Release for 7 years, 10 years, 20 years, and 30 years.

(b)(1) In the event that the borrower prepays a loan under paragraph (a) of this section using, directly or indirectly, tax exempt financing, the discount shall be adjusted to ensure that the borrower receives a benefit that is

no greater than the benefit the borrower would receive if the borrower used financing that was not tax exempt. The borrower shall certify in writing whether the financing will be tax exempt.

(2) The discount rate established in paragraph (a) of this section shall be adjusted for a tax exempt financing by substituting for the ''I'' term in the discount rate formula, a discount rate equal to the interest rate(s) published pursuant to 7 CFR 1714.5, determination of interest rates on municipal rate loans. This is the interest rate established for the new RUS loan program which is based on municipal interest rates for issues of comparable maturity. No interpolation or average will be used. If a note is to be prepaid under this subpart and is subject to this tax exempt adjustment, the discount rate will be determined from the published table in the FEDERAL REGISTER. For example, if the note to be discounted matures in the year 1999 then the discount rate will be the interest rate for the year 1999. RUS will publish a schedule of interest rates for municipal rate loans in the FEDERAL REGISTER at the beginning of each calendar quarter. The published rates in effect eight business days prior to closing will be used for the discount rates. All notes to be prepaid that have remaining years to maturity of more than 20 years will be discounted at the interest rate in effect for new RUS municipal rate loans of comparable maturity at the time of closing.

§ 1786.154 Qualified Notes.

An eligible borrower may prepay Qualified Notes under this subpart at the discounted present value. A Qualified Note is a note evidencing an RUS electric loan, all advances of which were made prior to May 1, 1992, or not less than 2 years prior to the date of prepayment closing. See §§ 1786.155(a)(3) and 1786.158 (h) and (j).

§ 1786.155 Eligible borrower.

(a) To be eligible to prepay an electric loan under this subpart, the borrower must be in compliance with the following:

(1) The borrower shall be current on all payment obligations on outstanding loans made or guaranteed by RUS. For the purpose of determining eligibility for prepayment, a default by a power supply borrower from which a distribution borrower purchases wholesale power shall not be considered a default by the distribution borrower;

(2) There shall exist no material defaults under the borrower's RUS Loan Contract and Mortgage;

(3) The borrower shall have expended all funds advanced pursuant to the RUS Loan Contract for the purposes for which such funds were advanced. A borrower will not be eligible to prepay under this subpart if it has any funds advanced pursuant to the RUS Loan Contract in its Construction Fund Account; and

(4) The borrower shall be current on all obligations under any wholesale power contract with an RUS financed power supply borrower.

(b) The eligibility of borrowers that have had any indebtedness representing loans made or guaranteed by RUS restructured shall be determined on a case by case basis considering the terms and conditions of the restructuring agreement.

§ 1786.156 Application procedure.

Any borrower seeking to prepay Qualified Notes under this subpart should apply to the appropriate RUS Regional Director or the Director of the Power Supply Division. The application shall provide the following:

(a) Borrower's RUS designation;

(b) Borrower's name and address;

(c) A certified copy of a resolution of the board of directors of the borrower that the borrower wishes to enter into a prepayment agreement providing for the prepayment of all or a portion of its Qualified Notes;

(d) Listing of each Qualified Note to be prepaid by loan designation, RUS account number, advance date, maturity date, original amount, and outstanding principal balance;

(e) Evidence that the borrower has the ability to obtain the financing necessary to prepay its Qualified Notes listed in paragraph (d) of this section and identification of the source of financing and the need if any of obtaining a lien accommodation from RUS; and

(f) Such additional information as the Administrator may request.

§1786.157 Approval of applications.

(a) Ordinarily, within 30 days of receipt, an application will be reviewed and the borrower will be notified as to whether the application has been approved. If the application has not been approved, the borrower will be informed as to the reasons. If the application is approved the borrower shall thereafter be provided with a prepayment agreement for execution.

(b) The Administrator may limit the number of applications approved and closings scheduled from time to time, taking into account, among other matters, administrative considerations of the RUS.

§1786.158 Terms and conditions of prepayment agreement.

Upon receipt of a satisfactory application, RUS shall provide to the borrower for its execution a prepayment agreement, in form and substance satisfactory to RUS, which may include the following:

(a) Provide for the prepayment of one or more Qualified Notes from time to time, but no more than two closings may be scheduled in any calendar year unless a third closing is for the prepayment of all outstanding electric loans of the borrower;

(b) Set forth procedures and forms through which the borrower will notify the Government of each election it makes to prepay certain Qualified Notes upon a requested closing date and the Government will notify the borrower of the established closing date and prepayment amount for the Qualified Notes for each closing;

(c) Reserve to the Administrator the right to reschedule closing dates to meet administrative considerations;

(d) Set forth closing requirements identifying the location and manner of payment, and all documentation and information to be delivered prior to or at closing, including opinions of counsel and certificates from the borrower;

(e) Provide for notice by either telephone or facsimile to be given by RUS to the borrower not more than 8 nor less than 3 business days before a scheduled closing date of the amount to be paid at closing which shall include all accrued interest and the discounted present value of the Qualified Notes to be prepaid;

(f) Provide for notice of the 120 month period during which the borrower's eligibility for direct or insured loans will be restricted;

(g) Set forth representations and warranties;

(h) Require the borrower to prepay each Qualified Note specified in full;

(i) Require the borrower to identify the source of the financing that will be used directly or indirectly to refinance the Qualified Notes. If the source is other than internally generated funds, the borrower must certify in writing whether such financing will be tax exempt, and if tax exempt financing will be used, furnish all information on the terms and conditions of the financing as RUS may require;

(j) Require the borrower to rescind the unadvanced balance of all outstanding electric loans as of the date of initial closing;

(k) Require the borrower, if it is a party to a wholesale power contract with a power supply borrower, to provide the Administrator with such assurances as the Administrator may require that it is in compliance with and will continue to comply with its obligation to such power supply borrower;

(l) Provide RUS, if the Administrator determines it necessary, with security for all outstanding rural development loans and amendments to any outstanding rural development loan agreements in form and substance, and on terms and conditions, satisfactory to RUS;

(m) Prescribe remedies for violating the terms and conditions of the prepayment agreement;

(n) Provide for termination by RUS of the right for the borrower to prepay thereunder;

(o) Provide evidence that any approvals required from any supplemental lender have been obtained; and

(p) Set forth such other terms and conditions as the Administrator shall deem appropriate.

§1786.159 Initial closing.

(a) Upon receipt of the prepayment agreement, the borrower may submit,

pursuant to the terms of the prepayment agreement, a closing request which shall request a closing date no less than 30 business days from the date of the request.

(b) The Government will respond to the borrower's closing request by delivering a preclosing notice to the borrower not less than 10 business days prior to the date which the Government, after reviewing the borrower's closing request, selects as a closing date.

§ 1786.160 Subsequent closings.

(a) Each subsequent prepayment after the initial closing shall be facilitated with the submission of an additional closing request by the borrower. Each closing request must request a closing date no less than 30 business days from the date of the request.

(b) The Government will respond to each subsequent closing request by delivering a preclosing notice to the borrower not less than 10 business days prior to the date which the Government, after reviewing the borrower's closing request, selects as a closing date in each case.

§ 1786.161 Return of Qualified Notes and release of lien.

Upon payment to RUS at closing of the full amount specified in the notice delivered by RUS to the borrower pursuant to the terms of the prepayment agreement (see § 1786.158(e)), RUS will deliver to the borrower at closing those Qualified Notes which have been paid in full at such closing, and upon payment and discharge of all outstanding RUS debt obligations by the borrower, RUS will deliver to the borrower at the final closing a release of lien prepared by the borrower pursuant to the terms of the prepayment agreement.

§ 1786.162 Outstanding loan documents.

(a) Except as expressly provided in this subpart, the borrower shall comply with all provisions of its RUS Loan Contract, its outstanding notes issued to RUS, and the RUS Mortgage.

(b) Nothing in this subpart shall affect any rights of supplemental lenders under the RUS Mortgage, or other creditors of the borrower.

(c) Nothing in this subpart shall prohibit a borrower from making prepayments of any loans pursuant to the RE Act in accordance with the terms of such loans.

§ 1786.163 Existing wholesale power contracts.

(a) If the borrower is a party to a wholesale power contract with a power supply borrower financed pursuant to the RE Act, the Administrator may require that the borrower and the power supply borrower enter into a supplement to the outstanding wholesale power contract providing substantially as follows:

SAMPLE CONTRACT TERMS

So long as any of the notes evidencing secured loans of the power supply borrower are outstanding, the borrower will not, without the approval in writing of the power supply borrower and the Administrator, take or suffer to be taken any steps for reorganization or dissolution, or to consolidate with or merge into any corporation, or to sell, lease or transfer (or make any agreement therefor) all or a substantial portion of its assets, whether now owned or hereafter acquired. The power supply borrower will not unreasonably withhold or condition its consent to any such, reorganization, dissolution, consolidation, or merger, or to any such sale, lease or transfer (or any agreement therefor) of assets. The power supply borrower will not withhold or condition such consent except in cases where to do otherwise would result in rate increases for the other members of the power supply borrower or impair the ability of the power supply borrower to repay its secured loans in accordance with their terms, or adversely affect system performance in a material way. Notwithstanding the foregoing, the borrower may take or suffer to be taken any steps for reorganization or dissolution or to consolidate with or merge into any corporation or to sell, lease or transfer (or make any agreement therefor) all or a substantial portion of its assets, whether now owned or hereafter acquired without the power supply borrower's consent, so long as the borrower shall pay such portion of the outstanding indebtedness on the power supply borrower's notes or other obligations as shall be determined by the power supply borrower with the prior written consent of the Administrator and shall otherwise comply with such reasonable terms and conditions as the Administrator and power supply borrower may require either: (1) To eliminate any adverse effect that such action seems likely to have on the rates of the other members of the power supply borrower, or

(2) To assure that the power supply borrower's ability to repay the secured loans and other obligations of the power supply borrower in accordance with their terms is not impaired.

The Administrator may require, among other things, that any payment owed under (2) of the preceding sentence that represents a portion of the power supply borrower's indebtedness on Notes shall be paid by the borrower in the manner necessary to accomplish a defeasance of those obligations in accordance with the loan documents relating thereto, or be paid directly to the holders of the Notes for application by them as prepayments in accordance with the provisions of such documents, or be paid to the power supply borrower and held and invested in a manner satisfactory to the Administrator.

[End of sample contract terms]

(b) The Administrator may exempt a borrower from the requirement to enter into a supplement to its outstanding wholesale power contract if the Administrator determines that such requirement is burdensome and unnecessary in light of the provisions of the existing wholesale power contract, other security arrangements of the power supply borrower, and any other relevant facts and circumstances. Normally such exemption will be granted only with the concurrence of the power supply borrower.

§1786.164 Loan fund audit.

In the event that a borrower shall prepay all its outstanding electric loans RUS shall have the right to audit within six (6) months of closing transactions involving the RUS Construction Fund Account established and maintained by the borrower pursuant to the terms of the RUS Loan Contract and to inspect all books, records, accounts, and other documents and papers of the borrower. Should RUS determine that the borrower has made disbursements of funds advanced pursuant to the RUS Loan Contracts which do not comply with the requirements thereof, the borrower shall be required to pay the RUS an amount equal to the difference between the amount which the borrower prepaid under this subpart with respect to such advances, and the amount which the borrower would otherwise have been required to return to the RUS as a result of noncompliance if the borrower had not prepaid such advances, plus interest. (See 7 CFR part 1721, Post-Loan Policies and Procedures for Insured Electric Loans.)

§1786.165 Reporting.

Borrowers that no longer have any loans made or guaranteed by RUS and are considering applying for other financial assistance pursuant to the RE Act are encouraged to file the end-of-year operating report, RUS Form 7.

§1786.166 Approvals.

The borrower shall be responsible for obtaining all approvals necessary to consummate the transaction as required by the prepayment agreement, including such approvals as may be required by regulatory bodies and other lenders.

§1786.167 Restrictions to additional RUS financing.

(a) No borrower that prepays an electric loan at a discount as provided under this subpart may apply for or receive direct or insured loans during the 120 months from the most recent closing date, except at the discretion of the Administrator. During the 120 month period the Administrator may consider providing an insured loan if, among other matters, it is necessary to assure repayment of, or protect the Government's security for any outstanding loans or loan guarantees, or the borrower's system has suffered severe physical plant related damage due to conditions beyond its control and the borrower is unable to obtain financing at reasonable terms to restore the system from non-RUS sources, including the Federal Emergency Management Agency, and from private sources. Upon expiration of the 120 months, such borrowers may apply for direct or insured loans in the same manner as other borrowers provided that such borrowers may not apply for direct or insured loans for facilities, construction of which commenced prior to the expiration of the 120 months. Special provisions for mergers involving a borrower that has prepaid pursuant to this subpart are in 7 CFR 1717.158.

(b) Borrowers that prepay their direct or insured RUS loans under this subpart remain eligible for certain types of financial assistance under the

RE Act, including loan guarantees and rural development loans.

[59 FR 13620, Mar. 22, 1994, as amended at 61 FR 66874, Dec. 19, 1996]

§ 1786.168 Borrowers who prepaid under this part prior to October 21, 1992.

(a) A borrower that had prepaid, prior to the date of enactment of Public Law 102–428 (106 Stat. 2183) on October 21, 1992, at a discount rate as provided at 7 CFR part 1786, subpart C:

(1) Shall not be eligible except at the discretion of the Administrator as stated in paragraph § 1786.167(a), to apply for or receive direct or insured loans during the 180-month period beginning on the date of the prepayment; and

(2) Shall not be eligible to apply for or receive direct or insured loans from RUS until the borrower has repaid to the RUS the sum of:

(i) The amount (if any) by which the discount the borrower received by reason of the prepayment exceeds the discount the borrower would have received had the discount been based on the cost of funds to the Department of the Treasury as calculated at § 1786.153 at the time of the prepayment; and

(ii) Interest on the amount described in paragraph (a)(2)(i) of this section for the period beginning on the date of the prepayment and ending on the date of the repayment, at a rate equal to the average annual cost of borrowing by the Department of the Treasury. This rate will be calculated first on the date of prepayment and at one year intervals from that date based on the same U.S. Treasury issues published in the Federal Reserve Statistical Release closest to that date. The Treasury rate of interest to be applied for each year will be the rate for the Treasury issue of comparable maturity to the number of years from the prepayment date to the repayment date and at one year intervals thereafter.

(b) If a borrower and the Administrator have entered into an agreement with respect to a prepayment occurring before October 21, 1992, this section shall supersede any provision in the agreement relating to the restoration of eligibility for loans under the RE Act.

(c) Borrowers who prepaid prior to October 1, 1987, are eligible for assistance under the RE Act in the same manner as other borrowers with respect to loan guarantees and the rural development loans.

(d) During the 180 month period described in paragraph (a)(1) of this section the Administrator may consider providing an insured loan, if the conditions described in § 1786.167(a) exist.

(e) Borrowers may not apply for direct or insured loans for facilities, construction of which commenced prior to the expiration of the 180 month period described in paragraph (a)(1) of this section.

§ 1786.169 Liability.

It is the intent of this subpart that any failure on the part of RUS to comply with any provisions of this subpart, including without limitation, those provisions setting forth specified timeframes for action by RUS on applications for prepayments or closing requests, shall not give rise to liability of any kind on the part of the Government or any employees of the Government including, without limitation, liability for damages, fees, expenses or costs incurred by or on behalf of a borrower, private lender or any other party.

§ 1786.170 Prepayment of loans approved after December 20, 1993. [Reserved]

§§ 1786.171—1786.199 [Reserved]

Subpart G—Refinancing and Prepayment of RUS Guaranteed FFB Loans Pursuant to Section 306(c) of the RE Act

AUTHORITY: 7 U.S.C. 901 *et seq.*; Pub. L. 103–354, 108 Stat. 3178 (7 U.S.C. 6941 *et seq.*); sec. 1201(b) of subtitle B of title 1 of Pub. L. 103–66, 107 Stat. 312.

SOURCE: 58 FR 51008, Sept. 30, 1993, unless otherwise noted.

§ 1786.200 Purpose.

This subpart sets forth the policies and procedures of RUS through the existing FFB program, whereby borrowers may prepay and refinance, outstanding FFB Notes evidencing electric

or telephone loans with FFB, pursuant to the provisions of section 306(C) of the RE Act as added by Public Law 103–66, 107 Stat. 312, enacted August 10, 1993.

§1786.201 Definitions and rules of construction.

(a) *Definitions.* As used in this subpart:

Administrator means the Administrator of the Rural Utilities Service (RUS).

Borrower means any organization which has an outstanding note(s) evidencing electric or telephone loans guaranteed by RUS, from FFB.

Business day means any such day on which both the Federal Financing Bank and Federal Reserve Bank—New York are open for business.

Electric loan means a loan made by FFB and guaranteed by RUS under section 306 of the RE Act for electric service.

FFB means the Federal Financing Bank, an instrumentality and wholly owned corporation of the United States.

Government means the United States of America, acting through the Administrator of the Rural Utilities Service.

Loan guarantee means RUS's guarantee under section 306 of the RE Act of a loan from FFB.

Payment date means the date that payment is due and is the last day in a calendar quarter.

Prepayment penalty means the same as prepayment premium.

Prepayment premium shall have the meaning set forth at §1786.207.

RE Act means the Rural Electrification Act of 1936, as amended (7 U.S.C. 901 *et seq.*).

REA means the Rural Electrification Administration formerly an agency of the United States Department of Agriculture and predecessor agency to RUS with respect to administering certain electric and telephone loan programs.

Refinancing note shall have the meaning set forth at §1786.206.

RUS means the Rural Utilities Service, an agency of the United States Department of Agriculture established pursuant to Section 232 of the Federal Crop Insurance Reform and Department of Agriculture Reorganization Act of 1994 (Pub. L. 103–354, 108 Stat. 3178), successor to REA with respect to administering certain electric and telephone programs. See 7 CFR 1700.1.

RUS loan contract means the agreement, as amended, supplemented, or restated from time to time, between a borrower and RUS providing for loans or loan guarantees pursuant to the RE Act.

RUS mortgage means collectively those mortgages and security agreements made by and between the borrower and the Government, securing indebtedness evidencing electric and telephone loans or loan guarantees made pursuant to RE Act. The term includes such mortgages regardless whether third parties are mortgagees with RUS.

Supplemental lender means a private lender whose loan to the borrower is secured under an RUS mortgage.

Telephone loan means a loan made by FFB and guaranteed by RUS under section 306 of the RE Act for telephone service.

(b) *Rules of construction.* Unless the context shall otherwise indicate, the terms defined in paragraph (a) of this section include the plural as well as the singular, and the singular as well as the plural. The words ''herein,'' ''hereof'' and ''hereunder'', and words of similar import, refer to this subpart as a whole.

[58 FR 51008, Sept. 30, 1993, as amended at 59 FR 66440, Dec. 27, 1994]

§1786.202 Prepayment and refinancing of RUS guaranteed FFB loans.

The borrower of an electric or telephone loan made by the FFB and guaranteed by RUS under section 306 of the RE Act may, at the option of the borrower, refinance or prepay a loan or an advance on the loan, or any portion of the loan or advance in accordance with section 306C of the RE Act, after meeting certain conditions using the procedures prescribed in the note. After refinancing existing notes under this section, additional prepayments or refinancings will be governed by the terms of the refinancing note(s).

§1786.203 Special considerations.

Generally all FFB borrowers with loans guaranteed by RUS whose FFB

notes have not been accelerated are eligible to prepay or refinance under this part. All requests for prepayment or refinancing will be processed in accordance with this subpart except that some requests for refinancing and prepayments are more complicated and thus will involve special considerations. These requests will have to be handled on a case by case basis and include:

(a) Telephone borrowers who are required to meet certain terms of their indenture;

(b) Borrowers who have amended their old form note or have already repriced prior to September 30, 1993;

(c) Borrowers that have been involved in a merger or consolidation;

(d) Borrowers whose obligations to RUS, FFB notes, or security instruments differ from those normally used;

(e) A request to prepay or refinance an amount of less than $100,000 or an amount of less than the full amount of an advance outstanding; or

(f) A request to prepay or refinance a note that includes unadvanced loan funds.

§ 1786.204 Limitations.

(a) No more than three refinancing notes will be executed for any borrower per calendar year.

(b) The borrower may not select a term for the refinanced advance that ends after the maturity date set for that advance.

§ 1786.205 Application procedure.

(a) Any borrower seeking to prepay or refinance an advance from the FFB under this subpart should apply by letter to the appropriate RUS Regional Director or, in the case of power supply borrowers, to the Director of the Power Supply Division. The borrower will be required to submit applications and elections in a digital format to be supplied by RUS. The application letter shall provide the following:

(1) Borrower's RUS designation;

(2) Borrower's name and address;

(3) Listing of each note to be prepaid by loan designation, RUS note number, RUS account number, advance date, maturity date, original amount, outstanding balance, and date(s) of any substitute FFB note(s) amending the original FFB Note;

(4) A statement of the borrower's intention to finance the premium by an addition to principal balance or to pay the premium in cash or with unsecured debt;

(5) A statement of the maturity options that the borrower wishes to select;

(6) Such additional information as the Administrator may request.

(b) Requests for refinancing or prepayment will ordinarily be processed in the order that they are received. Borrower's may withdraw an application by notifying the appropriate RUS office in which they filed the application.

(c) When the request for prepayment or refinancing is approved for processing the borrower will be provided with appropriate instructions, documents and forms which may include but are not limited to the following:

(1) An FFB refinancing note;

(2) Resolution of Board of Directors;

(3) Legal Opinion;

(4) Certificate of Secretary;

(5) Waiver of Notice;

(6) Notice to borrower electing an effective date other than a scheduled quarterly payment date (if applicable);

(7) Documentation of obligations secured pursuant to section 1786.208 if any; and

(8) Security instrument.

(Approved by the Office of Management and Budget under control number 0572–0032)

§ 1786.206 Refinancing note.

(a) RUS will issue a replacement guaranty for refinancing notes delivered to FFB to replace and substitute for existing FFB notes in connection with any refinancing by FFB pursuant to section 306C of the RE Act.

(b) Generally, refinancing notes will, to the extent practicable, consolidate all of a borrower's existing FFB notes which have been guaranteed by RUS and containing terms and conditions as FFB may require and RUS and the borrower may accept.

(c) Notwithstanding any contrary provision contained in this subpart, RUS will give preference to processing refinancings that utilize a generic form

of refinancing note in the event that FFB prescribes one.

[58 FR 51008, Sep. 30, 1993; 58 FR 58729, Nov. 3, 1993]

§1786.207 Prepayment premium.

(a) A premium shall be assessed against a borrower that refinances or prepays a loan or loan advance, or any portion of a loan or advance, under this section. RUS will collect the prepayment premium as calculated by FFB. FFB will calculate this premium as described in this section. Except as provided in paragraph (b) of this section, the premium shall be equal to the lesser of:

(1) The difference between the outstanding principal balance of the loan being refinanced and the present value of the loan discounted at a rate equal to the then current cost of funds to the Department of the Treasury for obligations of comparable maturity to the loan being refinanced or prepaid;

(2) 100 percent of the amount of interest for 1 year on the outstanding principal balance of the loan or loan advance, or any portion of the loan or advance, being refinanced, multiplied by the ratio that:

(i) The number of quarterly payment dates between the date of the refinancing or prepayment and the maturity date for the loan advance; bears to

(ii) The number of quarterly payment dates between the first quarterly payment date that occurs 12 years after the end of the year in which the amount being refinanced was advanced and the maturity date of the loan advance; and

(3)(i) The present value of 100 percent of the amount of interest for 1 year on the outstanding principal balance of the loan or loan advance, or any portion of the loan or advance, being refinanced or prepaid; plus

(ii) For the interval between the date of the refinancing or prepayment and the first quarterly payment date that occurs 12 years after the end of the year in which the amount being refinanced or prepaid was advanced, the present value of the difference between:

(A) Each payment scheduled for the interval on the loan amount being refinanced or prepaid; and

(B) The payment amounts that would be required during the interval on the amounts being refinanced or prepaid if the interest rate on the loan were equal to the then current cost of funds to the Department of the Treasury for obligations of comparable maturity to the loan being refinanced or prepaid.

(b)(1) Except as provided in paragraph (b)(2) of this section, the premium provided by paragraph (a)(1) of this section shall be required for refinancing or prepayment under this section.

(2) In the case of a loan advanced under an agreement that permits the refinancing or prepayment of the loan advance based on the payment of 1 year of interest on the outstanding principal balance of the loan advance, a borrower may, in lieu of the premium required by paragraph (a)(1) of this section, pay a premium as provided by:

(i) Paragraph (a)(2) of this section, if the loan advance has reached the 12-year maturity required under the loan agreement for the refinancing or prepayment; or

(ii) Paragraph (a)(3) of this section, if the loan advance has not reached the 12-year maturity required under the loan agreement for the refinancing or prepayment.

§1786.208 Increased principal.

A borrower can meet the premium requirements by increasing the outstanding principal balance of the loan advance that is being refinanced. If it does so the borrower shall make a payment at the time of the refinancing equal to 2.5 percent of the amount of the premium that is added to the outstanding principal balance of the loan.

§1786.209 Outstanding loan documents.

(a) Except as expressly provided in this subpart, the borrower shall comply with all provisions of its RUS loan contract, its outstanding notes issued to RUS, and the RUS mortgage.

(b) Nothing in this subpart shall affect any rights of supplemental lenders under the RUS mortgage or the rights of any other creditors of the borrower.

(c) Nothing in this subpart shall prohibit a borrower from making prepayments on any loans pursuant to the RE

Act in accordance with the terms thereof or as may be otherwise permitted by law.

§ 1786.210 Approvals.

The borrower shall be responsible for obtaining all approvals necessary to consummate the transaction as required by the refinancing note, including such approvals as may be required by regulatory bodies and other lenders.

PART 1788—RUS FIDELITY AND INSURANCE REQUIREMENTS FOR ELECTRIC AND TELEPHONE BORROWERS

Subpart A—General Policies and Procedures

Sec.
1788.1 General.
1788.2 Policy.
1788.3 Certification of insurance coverage.
1788.4 New borrowers' procedure.
1788.5 RUS endorsement required.
1788.6 Analysis of deductibles.
1788.7 Specialized requirements.
1788.8 Procedure for fidelity notices and claims.
1788.9 Recovering claims.
1788.10 Reporting accidents.
1788.11 Reporting claims to RUS.
1788.12 Use of insurance proceeds.
1788.13 Package-type policies.
1788.14 Obtaining minimum cost.
1788.15 Type of policies.
1788.16 Telephone building rates.
1788.17 Coinsurance recommended.
1788.18 Advantageous fire rates.

Subpart B—Specific RUS Minimum Requirements

1788.19 General.
1788.20 Officers and employees.
1788.21 Types of coverage.
1788.22 Collection agents.
1788.23 When revenues exceed $1 million.
1788.24 Single bond provisions.
1788.25 Responsibilities of borrowers.
1788.26 Disbursement of recovered sums.
1788.27 Requirements of coverage.
1788.28 Limits required.
1788.29 Contractual liability insurance.
1788.30 Provision on explosives.
1788.31 Buried plant provision.
1788.32 Appliance sales coverage.
1788.33 Railroad right-of-way exclusion.
1788.34 Pollution exclusion.
1788.35 Liability requirements.
1788.36 Comprehensive requirements.
1788.37 Coverage requirement.
1788.38 RUS endorsement.
1788.39 Types of fire insurance policies.
1788.40 Coverage requirement.
1788.41 Endorsements required.
1788.42 Coverage requirement.
1788.43 Suspension notice.
1788.44 Annual inspection report.
1788.45 Modifications considered.

Subpart C—Insurance for Contractors, Engineers, and Architects

1788.46 General.
1788.47 Policy requirements.
1788.48 Contract requirements.
1788.49 Bond requirements.
1788.50 Acceptable sureties.
1788.51 Borrower options.
1788.52 Builders' risk policy.
1788.53 Major equipment insurance.
1788.54 Compliance with contracts.
1788.55 Providing RUS evidence.
EXHIBIT A TO PART 1788—RURAL UTILITIES SERVICE ENDORSEMENT
EXHIBIT B TO PART 1788—RURAL UTILITIES SERVICE JOINT INSURED

AUTHORITY: 7 U.S.C. 901 *et seq.*; 7 U.S.C. 1921 *et seq.*; Pub. L. 103–354, 108 Stat. 3178 (7 U.S.C. 6941 *et seq.*).

SOURCE: 51 FR 25855, July 17, 1986, unless otherwise noted.

Subpart A—General Policies and Procedures

§ 1788.1 General.

This part sets forth general Rural Utilities Service (RUS) policy and requirements for minimum insurance and fidelity coverage for electric and telephone borrowers and provides information for borrowers to meet those requirements.

§ 1788.2 Policy.

(a) *Specific coverages required.* RUS mortgage provisions require that borrowers procure specific minimum insurance and fidelity coverage and that they maintain this coverage as long as the loan or guaranteed loan remains unpaid.

(b) *Evidence of coverage.* Borrowers shall furnish RUS satisfactory evidence that required insurance and fidelity coverage is being continuously maintained.

(c) *Excess coverage.* Borrowers may purchase insurance or fidelity coverage in excess of the RUS requirements.

(d) *Borrower responsibility*. Procurement of insurance and fidelity coverage is the primary responsibility of the borrower.

(1) The borrower shall purchase required coverages from companies of the borrower's choice, provided the companies selected are licensed to do business in the state, or states, in which the borrower operates.

(2) The required insurance and fidelity bond coverage shall be in accordance with acceptable insurance industry types of bonds and policies.

(3) If a borrower fails to purchase or maintain the required insurance and fidelity coverages, the mortgagees may place required insurance and fidelity coverage on behalf and in the name of the borrower. The borrower shall pay the cost of this coverage, as provided in the loan documents.

(e) *Losses not covered*. In the event of a loss not covered because of a deductible provision in an insurance policy, the borrower should treat the loss as an expense in the year in which it occurs if provision has not been made for such losses in an insurance reserve account. If an insurance reserve has been established, the amount of the loss should be charged directly against that account. Ordinarily, losses not covered because of a deductible provision can be absorbed as current operating costs. A reserve account may be established to provide for losses which would be excluded because of a deductible and the following guidelines are recommended:

(1) The reserve balance at any one time should not exceed the total of the deductibles in the borrower's insurance policies.

(2) The annual credit to the reserve account should not exceed one-tenth of the maximum reserve balance, as set forth above, or a lesser amount needed to maintain the reserve at the maximum level.

(3) No reserve should be considered for losses to outside plant or for other coverages not required by RUS.

(4) Accounts used for such reserves shall be as specified in the applicable Uniform System of Accounts.

§1788.3 Certification of insurance coverage.

Borrowers shall furnish written evidence to RUS within sixty (60) days of the close of each calendar year stating that during such year all insurance required by this part 1788 was in force and renewals have been obtained for all policies. The annual certification will be subject to audit verification.

§1788.4 New borrowers' procedure.

New borrowers shall furnish RUS, by letter, a schedule of their insurance policies in force, showing the name of the insurance company, specific type of policy, policy number, expiration date, and the amounts of coverage. In the case of fire insurance policies, new borrowers shall specify amounts of coverage (building, contents) and a complete description of the locations. For workers' compensation, in those states where a state agency administers the workers' compensation fund, new borrowers shall provide the file or account number in lieu of a policy number.

§1788.5 RUS endorsement required.

(a) Each insurance policy, other than fidelity bonds or policies, purchased by borrowers to meet the requirements of RUS shall contain the following RUS Endorsement:

The insurer agrees with the Rural Utilities Service as follows:

1. That this endorsement forms a part of the original policy.
2. Changes in policy forms or endorsements, as a result of approval by a regulatory authority, will be submitted to the Rural Utilities Service prior to use for a borrower of said Administration.
3. That it will mail to said Administration, at least 10 days before the effective date thereof, notice of cancellation or termination of said policy.
4. That each endorsement subsequently issued will become a part of said original policy.

(b) When the RUS Borrower is a subsidiary of a parent corporation, RUS requires the following endorsement for policies covering subsidiary companies be included as a part of each public liability and fire policy.

The Insurer agrees with the Rural Utilities Service, as follows:

1. That this endorsement forms a part of the original policy.

2. Changes in policy forms or endorsements, as a result of approval by a regulatory authority, will be submitted to the Rural Utilities Service prior to use for a borrower of said Administration.

3. That it will mail to said Administration, at least ten days before the effective date thereof, notice of cancellation or termination of said policy, or cessation of coverage for any reason of any affiliate or subsidiary of the assured which is a borrower from the administration.

4. That each endorsement subsequently issued will become a part of said original policy.

(c) In the case of a cooperative or mutual organization, RUS requires that the following: ''Endorsement Waiving Immunity From Tort Liability'' be included as a part of each public liability, owned, nonowned, hired automobile, and aircraft liability, employers' liability policy, and boiler policy:

The Insurer agrees with the Rural Utilities Service that such insurance as is afforded by the policy applies subject to the following provisions:

1. The company agrees that it will not use, either in the adjustment of claims or in the defense of suits against the Insured, the immunity of the Insured from tort liability, unless requested by the Insured to interpose such defense.

2. The Insured agrees that the waiver of the defense of immunity shall not subject the company to liability of any portion of a claim, verdict or judgment in excess of the limits of liability stated in the policy.

3. The company agrees that if the Insured is relieved of liability because of its immunity, either by interposition of such defense at the request of the Insured or by voluntary action of a court, the insurance applicable to the injuries on which such suit is based, to the extent to which it would otherwise have been available to the Insured, shall apply to officers and employees of the Insured in their capacity as such; provided that all defenses other than immunity from tort liability which would be available to the company but for said immunity in suits against the Insured or against the company under the policy shall be available to the company with respect to such officers and employees in suits against such officers and employees or against the company under the policy.

§ 1788.6 Analysis of deductibles.

When deductibles are considered, careful analysis should be given to the size of the deductible and its effect on the financial position of the borrower. A periodic review should be made of the policy to determine the economy and advisability of continuing the deductible.

§ 1788.7 Specialized requirements.

Borrowers with specialized requirements or equipment, such as nuclear facilities, private generation connection, hydro, solar, wind, watercraft, and aircraft, or who do not operate their own systems, will be advised of RUS insurance requirements in each specific case.

§ 1788.8 Procedure for fidelity notices and claims.

Upon discovery by the borrower or RUS of any fraudulent or dishonest act of any officer, employee, or collection agent, the borrower shall notify the bonding company of such discovery promptly in writing. Such notice, a copy of which shall be sent immediately to RUS and each supplemental lender, shall be given on behalf of both the borrower and RUS. If a proof of loss is filed, it shall also be filed on behalf of both the borrower and RUS. A copy of the proof of loss, if any, shall be sent immediately to RUS and each supplemental lender by the borrower.

§ 1788.9 Recovering claims.

The borrow shall, when necessary to protect all rights under the fidelity bond, initiate suit against the insurance company to recover all claims.

§ 1788.10 Reporting accidents.

Borrowers shall promptly provide the insurance company providing coverage a written report of all accidents involving injury to persons, damage to the property of others, or direct damage to the insured property of the borrower and forward at the same time a copy of all reports except those involving only employees of the borrower to RUS and each supplemental lender.

§ 1788.11 Reporting claims to RUS.

The borrower shall furnish RUS and each supplemental lender a copy of any claim submitted to an insurance company seeking recovery of loss for damage or destruction of property.

§ 1788.12 Use of insurance proceeds.

In the event of damage, loss, or destruction of property mortgaged to the government covered by insurance, the borrower shall repair or replace the damaged, lost, or destroyed property so that the property is in substantially the same condition as before the damage, loss, or destruction. Unless mortgagees direct otherwise, the proceeds of the insurance shall be used for that purpose.

§ 1788.13 Package-type policies.

RUS recommends that borrowers secure broad form, package-type policies (special multi-peril, combined fire, and boiler), when possible, combining all or as many as many as possible of the various coverages into a single policy to reduce the number of policies issued by individual insurance companies and to avoid any question between the insurance companies about responsibility.

§ 1788.14 Obtaining minimum cost.

Borrowers should request proposals from several companies, both stock and mutual, for initial and renewal of insurance policies to obtain a minimum cost for their insurance. Borrowers should maintain an accurate loss record for all insurance coverages to establish trends and evaluate the effect of losses on premiums.

§ 1788.15 Type of policies.

RUS recommends term policies, either 1- or 3-years, for insuring buildings, contents, stock, and equipment and reporting policies for insuring fluctuating material inventories.

§ 1788.16 Telephone building rates.

Telephone borrowers should investigate the possibility of having the building fire rate applied to both the buildings and contents in those states that permit the single rate. Buildings and contents coverages should be combined in the same policy.

§ 1788.17 Coinsurance recommended.

RUS recommends coinsurance where it is available. In accepting a policy with a coinsurance clause, the insured agrees to maintain insurance in an amount equal to at least a percentage of the actual cash value stated in the coinsurance clause.

§ 1788.18 Advantageous fire rates.

To eliminate delays and costly alterations, and to secure the most advantageous fire rates for buildings (generation plants, headquarters buildings, etc.) borrowers should have plans and specifications for buildings reviewed by the state fire rating bureau, the insurance agent of record, or competent, independent consultant for their recommendations.

Subpart B—Specific RUS Minimum Requirements

§ 1788.19 General.

This subpart sets forth specific RUS minimum requirements for insurance and fidelity coverages for electric and telephone borrowers.

§ 1788.20 Officers and employees.

Borrowers shall provide fidelity coverage for each officer and employee based on the estimated annual gross revenue of the borrower.

§ 1788.21 Types of coverage.

A new Commercial Crime Policy came into use January 1, 1986. This new policy form should be used in lieu of the Blanket Position Bond or Comprehensive 3D policies.

Under this Commercial Crime Policy the amounts of coverage required are as follows:

Annual gross revenue	Amounts of coverage
Less than $200,000	$50,000
$200,001 to 400,000	100,000
400,001 to 600,000	250,000
600,001 to 800,000	300,000
800,001 to 1,000,000	400,000
1,000,001 and over	500,000

The Rural Utilities Service Endorsement, Exhibit A, is necessary on all separate policies or where the fidelity coverage is added to a package policy. For a municipal borrower, a public employees' blanket bond covering employees and officers responsible for activities of the RUS-financed facilities is acceptable.

§ 1788.22 Collection agents.

Each collection agent of the borrower shall be included in the bond for not less than $2,500, or 10 percent of the highest amount collected annually by any one collection agent, whichever is greater. When banks are designated as collection agents, borrowers shall advise RUS regarding any special arrangements for fidelity coverage.

When annual gross revenues for a previous twelve-month period exceed the limit for the amount of fidelity coverage maintained, the borrower shall increase the coverage to the required amount.

§ 1788.23 When revenues exceed $1 million.

When annual gross revenues exceed $1 million, RUS recommends that borrowers obtain additional excess fidelity insurance.

§ 1788.24 Single bond provisions.

When the borrower is one of several affiliated companies and this coverage is provided by naming the borrower as one of several insureds under a single policy, the joint insured paragraph under general or insuring agreements shall be amended to include the provisions of the fidelity rider in exhibit B.

§ 1788.25 Responsibilities of borrowers.

(a) *Termination of fidelity coverage.* The new Comprehensive Crime Policy provides for fidelity coverage on a term basis. Borrowers should renew on a timely basis.

(b) *Effect of fraudulent or dishonest acts.* Upon discovery by the borrower or RUS of an fraudulent or dishonest act of any officer or employee, fidelity coverage for this person is automatically cancelled, but remains in effect for all other officers and employees not in collusion with this person. Therefore, borrowers must notify their fidelity insurer of the discovery.

(c) *Effect of borrower's inaction.* Upon discovery of a dishonest act, the borrower's inaction, by its failure to report such acts, whether motivated by restitution or the apparent insignificance of the amount involved, or for any other reason, can affect more than merely the validity of the present claim; it may bar some future loss of real significance caused by the same person.

(d) *Avoiding future risks.* To avoid this risk of future uninsured loss, the borrower shall obtain written assurance of continued coverage for that individual by the same or another bonding company.

(e) *Disclosure of dishonest acts.* Assurance of continued coverage, to be effective, requires the borrower to make full disclosure to the bonding company of the dishonest or fraudulent acts. This disclosure, however, need not be of the same degree required to establish a claim under a proof of loss or conviction of a false report violation.

§ 1788.26 Disbursement of recovered sums.

Sums recovered under any fidelity bond by the borrower for a loss of funds advanced under the notes or recovered by the government for any loss under such bond shall, unless otherwise directed by the mortgagees, be applied to the prepayment of indebtedness pro rata on the notes secured by the mortgage or to construct or acquire facilities, approved by the mortgagees, which will become part of the mortgaged property.

§ 1788.27 Requirements of coverage.

Workers' compensation and employers' liability insurance covering all employees of the borrower shall be maintained by borrowers in amounts required by law. If the borrower or any of its employees is not subject to the workers' compensation laws of the state, or states, in which the borrower conducts its operations, then its workers' compensation policy shall provide voluntary compensation coverage to the same extent as though the borrower and its employees were subject to such laws. The policy shall include:

(a) Occupational disease liability.

(b) Employers' liability insurance.

(c) ''Additional medical'' coverage of not less than $10,000 in those states where full medical coverage is not statutory.

When employers' liability insurance is provided by a separate policy issued to a cooperative or mutual organization, it shall include ''Endorsement Waiving

Immunity From Tort Liability.'' See 1788.5(c).

§1788.28 Limits required.

RUS requires that public liability insurance be maintained covering the ownership liability and all operations of the borrower with limits for bodily injury or death of not less than $1 million each occurrence—$1 million aggregate per policy period and with limits for property damage of not less than $1 million per occurrence and $1 million aggregate for the policy period. Borrowers have the option to purchase a $1 million single limit coverage for bodily injury and property damage. This required insurance may be in a policy or policies of insurance, primary and excess including the umbrella or catastrophe form.

§1788.29 Contractual liability insurance.

Contractual liability insurance shall be included as part of the public liability policy when the borrower executes an agreement or contract in which it assumes additional liability. The provisions of any ''hold harmless'' agreement should be referred to the borrower's insurance company for specific references in the policy.

§1788.30 Provision on explosives.

When explosives are used by employees of the borrower, the property damage exclusion clause for blasting shall be deleted.

§1788.31 Buried plant provision.

Borrowers contemplating construction of buried plant shall immediately obtain an endorsement from their insurance carrier deleting the exclusion in the standard public liability insurance policy which provides that the policy does not apply to injury to, or destruction of, wires, pipes, conduits, mains, sewers, or other similar property below the surface of the ground if the injury or destruction is caused by, or occurs during, the use of mechanical equipment for the purpose of excavating or drilling. For electric borrowers the rating classification includes this coverage automatically.

§1788.32 Appliance sales coverage.

When there are retail sales, repair, or installations of electrical appliances involved in borrowers' operations, borrowers shall purchase product liability damage.

§1788.33 Railroad right-of-way exclusion.

General liability policies in use contain a restriction pertaining to easement agreements involving construction on or adjacent to a railroad which are not automatically covered. Where construction is on a railroad right-of-way under an easement, borrowers shall purchase a general liability policy that specifically includes this necessary insurance coverage.

§1788.34 Pollution exclusion.

Liability policy forms exclude coverage for ''bodily injury'' or ''property damage'' arising out of the actual, alleged or threatened discharge, dispersal, release or escape of pollutants. Borrowers may wish to discuss this exclusion with their insurance companies.

§1788.35 Liability requirements.

RUS requires borrowers have liability insurance on all motor vehicles, trailers, semitrailers, and aircraft used in the conduct of the borrower's business, whether owned, nonowned, or hired by the borrower, with bodily injury limits of not less than $1 million for each person and $1 million for each occurrence, and property damage limits of $1 million for each occurrence; in connection with aircraft liability, also passenger bodily injury limits of $1 million per person and $1 million for each occurrence.

§1788.36 Comprehensive requirements.

RUS requires borrowers have comprehensive or separate fire, theft, and windstorm insurance on all owned motor vehicles, trailers, and aircraft having a unit value in excess of $1,000. The amount of coverage shall not be less than the actual cash value of the property insured.

§ 1788.37 Coverage requirement.

Borrowers shall have fire insurance, including the extended coverage endorsement, on each building and its contents, and on each storage location of materials, supplies, poles, and crossarms having a value at any one location in excess of $5,000, or in excess of 1 percent of the total plant value, whichever is larger. Such coverage shall be in an amount of not less than 80 percent of the current cost to replace the property new, less depreciation. Surveys should be conducted periodically, every two years at a minimum, to establish property values on an actual cash value basis.

§ 1788.38 RUS endorsement.

When the borrower is one of several affiliated companies and the coverage is provided by naming the borrower as one of several insureds under a single policy, the policy shall be amended to include the provisions of the RUS Endorsement in § 1788.5(b).

§ 1788.39 Types of fire insurance policies.

A fire insurance policy may be written on the following basis:

(a) Specified amount basis.

(b) Blanket form basis.

(c) Monthly reporting form basis. The reporting type of policy should include the limit of liability for each location. Whenever it appears that the value at any one location may exceed the limit of liability included in the policy, an endorsement to the policy should be promptly secured increasing the limit of liability for that particular location.

(d) Inland Marine Floater basis. Floater form policies on an all-risk basis are recommended to provide coverage for construction equipment, radio/telephone equipment, and pay stations furnished for use by subscribers and located on their premises or vehicles, and for radio or telephone equipment installed in borrowers' vehicles, for equipment being transported, and for materials stored at various locations.

§ 1788.40 Coverage requirement.

Borrowers shall purchase and maintain flood insurance for buildings in flood hazard areas to the extent available and required under the National Flood Insurance Act of 1968, as amended by the Flood Disaster Protection Act of 1973 (Pub. L. 93–234). The insurance should cover, in addition to the building, any machinery, equipment, fixtures, and furnishings contained in the building.

§ 1788.41 Endorsements required.

The National Flood Insurance Program provides for a standard flood insurance policy; however, other existing insurance policies which provide flood coverages may be used where flood insurance is available in lieu of the standard flood insurance policy. Such policies, in order to satisfy the insurance requirements of section 102 of the Flood Disaster Protection Act of 1973, should be endorsed to provide:

(a) That the insurer give 30 days written notice of cancellation or nonrenewal to the insured with respect to the flood insurance coverage. To be effective, such notice must be mailed to both the insured and the lender or Federal agency and must include information as to the availability of flood insurance coverage under the National Flood Insurance Program, and

(b) That the flood insurance coverage offered by the insurer is at least as broad as the coverage offered by the Standard Flood Insurance Policy.

§ 1788.42 Coverage requirement.

Electric borrowers having steam generating facilities shall maintain boiler and machinery insurance. Electric borrowers having internal combustion, gas turbine or hydro-generating facilities shall maintain machinery insurance. The limit for each accident shall not be less than the actual current cash value of the property of the borrower and of the adjacent property that would be damaged by explosion or breakdown of the insured object.

§ 1788.43 Suspension notice.

The standard RUS Endorsement, see § 1788.5(a), should be amended to provide written notice of suspension to RUS in the event of suspension of coverage.

§1788.44 Annual inspection report.

Borrowers shall provide RUS a copy of the annual inspection report by the insurance company's engineer.

§1788.45 Modifications considered.

When requested by the borrower and if loan security is not jeopardized, RUS will consider modifying the boiler and machinery insurance requirements for those borrowers with special or unusual circumstances, such as limited planned annual use of generating facilities, or where the value of generating facilities at a location is less than $1 million.

Subpart C—Insurance for Contractors, Engineers, and Architects

§1788.46 General.

This part sets forth RUS policy on minimum insurance requirements for contractors, engineers, and architects performing work under contracts with borrowers, and requirements for bonds to be furnished by contractors.

§1788.47 Policy requirements.

(a) Contractors, engineers, and architects performing work for borrowers under construction, engineering and architectural service contracts shall obtain insurance coverage, as required in §1788.51, and maintain it in effect until work under the contracts is completed.

(b) Contractors entering into construction contracts with borrowers shall furnish a contractors' bond, except as provided for in §1788.52, covering all of the contractors' undertaking under the contract.

(c) Borrowers shall make sure that their contractors, engineers, and architects comply with the insurance and bond requirements of their contracts.

§1788.48 Contract requirements.

Contracts entered into between borrowers and contractors, engineers, and architects shall provide that they take out and maintain throughout the contract period insurance of the following types and minimum amounts:

(a) Workers' compensation and employers' liability insurance, as required by law, covering all their employees who perform any of the obligations of the contractor, engineer, and architect under the contract. If any employer or employee is not subject to the workers' compensation laws of the governing state, then insurance shall be obtained voluntarily to extend to the employer and employee coverage to the same extent as though the employer or employee were subject to the workers' compensation laws.

(b) Public liability insurance covering all operations under the contract shall have limits for bodily injury or death of not less than $1 million each occurrence, limits for property damage of not less than $1 million each occurrence, and $1 million aggregate for accidents during the policy period. A single limit of $1 million of bodily injury and property damage is acceptable. This required insurance may be in a policy or policies of insurance, primary and excess including the umbrella or catastrophe form.

(c) Automobile liability insurance on all motor vehicles used in connection with the contract, whether owned, nonowned, or hired, shall have limits for bodily injury or death of not less than $1 million per person and $1 million per occurrence, and property damage limits of $1 million for each occurrence. This required insurance may be in a policy or policies of insurance, primary and excess including the umbrella or catastrophe form.

§1788.49 Bond requirements.

Construction contracts for facilities in amounts in excess of $100,000 shall require contractors to secure a contractors' bond on a form approved by the Administrator attached to the contract in a penal sum of not less than the contract price, which is the sum of all labor and materials including owner-furnished materials installed in the project. RUS Form 168b is for use when the contract exceeds $100,000. RUS Form 168c is for use when the contractor's surety has accepted a Small Business Administration guarantee and the contract is for $1 million or less. On line extension contracts under which work will be done in sections and no section will exceed a total cost

of $100,000, the borrower may waive the requirement for a contractors' bond.

§ 1788.50 Acceptable sureties.

Surety companies providing contractors' bonds shall be listed as acceptable sureties in the U.S. Department of Treasury Circular No. 570. A copy of the executed bond shall be furnished RUS. For construction contracts, other than buildings, amounting to $100,000 or less, the borrower shall determine whether a contractors' bond is required.

§ 1788.51 Borrower options.

For construction contracts for buildings amounting to $100,000 or less, the borrower has the option to require the contractors to furnish:

(a) A contractors' bond, as described in §§ 1788.52 and 1788.53, or

(b) A builders' risk policy.

§ 1788.52 Builders' risk policy.

The builders' risk policy shall be on a completed value form, effective from the date equipment or material is first delivered to the building site, and shall name both the borrower and the contractors as insureds.

(a) The policy shall insure against loss by fire or lightning and the named perils in the extended coverage endorsement.

(b) The amount of coverage shall be not less than the actual cash value of the property constructed, including all materials to be used in the construction and stored at the site, whether furnished by the borrower or the contractor.

§ 1788.53 Major equipment insurance.

When a borrower contracts for the installation of major equipment by other than the supplier or for the moving of major equipment from one location to another, RUS recommends that these contracts require the contractor to furnish the borrower with an installation floater policy. The policy should cover all risks of damage to the equipment until completion of the installation contract.

§ 1788.54 Compliance with contracts.

It is the responsibility of the borrower to make sure, before the commencement of work, that the engineer, architect, and the contractor have insurance which complies with their contract requirements. Compliance with contract requirements should be a certificate signed by a representative of the insurance company, including a provision that no change in, or cancellation of, any policy listed in the certificate will be made without prior written notice to the borrower.

§ 1788.55 Providing RUS evidence.

When RUS shall specifically so direct, the borrower shall also require the engineer, the architect, or the contractor to forward to RUS evidence of compliance with their contract requirements. The evidence shall be in the form of a certificate of insurance signed by a representative of the insurance company and include a provision that no change in, or cancellation of, any policy listed in the certificate will be made without the prior written notice to the borrower and to RUS.

EXHIBIT A TO PART 1788—RURAL UTILITIES SERVICE ENDORSEMENT

POLICY NUMBER: _____

COMMERCIAL CRIME

This endorsement applies to all forms forming part of the Commercial Crime Policy.

Employee Dishonesty Coverage Form

The Employee Dishonesty Coverage Form is amended by deleting the Cancellation As to Any Employee section and by substituting the following:

Cancellation as to any Employee

Coverage for any Employee shall be deemed cancelled (a) immediately upon discovery by you, or by any of your partners or officers thereof not in collusion with such Employee, or by the Administration of any dishonest act on the part of such Employee (b) at 12:01 a.m., standard time, upon the effective date specified in a written notice served upon you and the Administration or sent by registered mail to you and the Administration.

Crime General Provisions Form

B. General Conditions:

1. Section 4 is replaced by the following:

Duties in the Event of Loss

After you or the Rural Utilities Service of the United States of America (the Administration) discover a loss or situation that

may result in a loss of, or loss from damage to, Covered Property either you or the Administration must:

a. Notify us as soon as possible.

b. Submit to examination under oath at our request and give us a signed statement of answers.

c. Give us a detailed, sworn proof of loss within four months.

d. Cooperate with us in the investigation and settlement of any claim.

Prior discovery of loss by you shall not affect the right of the Administration to notify us of loss, and to file proof of loss even though such prior discovery by you may have occurred more than four months prior to the discovery of the loss by the Administration.

2. Section 6 is replaced by the following:

Legal Action Against Us: You or the Administration may not bring legal action against us involving loss:

a. Unless all the terms of this insurance have been complied with.

b. Until 60 days after proof of loss has been filed with us.

c. Unless brought within two years from the date the loss is discovered by you or the Administration.

3. Section 16 is replaced by the following:

Territory: This insurance covers only acts committed or events occurring within the United States of America, U.S. Virgin Islands, Puerto Rico, Canal Zone, Guam, Micronesia, or Canada.

A new section 19 is added to read as follows:

Any action, approval or consent which by the provisions of this Policy is required to be taken or signed by the Administration shall be effective if taken or signed by the Administrator of the Administration or by his authorized representative.

A new section 20 is added to read as follows:

Discovery by you shall be deemed to mean discovery by any officer or employee of the Insured not in collusion with the employee responsible for the loss discovered, and discovery by the Administration shall be deemed to mean discovery by any employee, agent or attorney of the Administration not in collusion with the employee responsible for the loss discovered.

C. General Definitions:

''Employee'' also includes non-salaried officers and collection agents in your service.

Common Policy Conditions

A. Cancellation:

1. Paragraph 2 is replaced by the following:

We may cancel this policy by mailing or delivering to the first Named Insured and to the Administration written notice of cancellation at least:

a. 10 days before the effective date of cancellation if we cancel for nonpayment of premium; or

b. 30 days before the effective date of cancellation if we cancel for any other reason.

A new section G is added to read as follows:

G. Notices:

1. It is agreed that settlement of any claim under this Policy shall be made check or draft payable to you, but no settlement shall be made without prior written approval of the Administration. It is further agreed if you cancel this Policy, the Administration may, within ten days after we receive such notice from you, advise us that the cancellation notice is inoperative. In such case, coverage shall continue as if such notice of cancellation had never been sent. Notices, approvals, and requests by the provisions of this Policy shall be sent as follows:

a. To us, at our home office.

b. To you, addressed to you at the city or town at which your principal office is located.

c. To the Administration, addressed to the Rural Utilities Service, United States Department of Agriculture, South Building, Washington, DC, 20250.

EXHIBIT B TO PART 1788—RURAL UTILITIES SERVICE JOINT INSURED

This Endorsement applies to the CRIME GENERAL PROVISIONS FORM and all Crime Coverage forms forming part of the policy.

PROVISIONS

1. Section 5.a of the the CRIME GENERAL PROVISIONS FORM is amended by adding the following:

Payment by us will be made to the first named insured for the use and benefit of the insured sustaining the loss.

2. Section 5.b is amended by deleting the period at the end thereof and adding the following:

, except that in the case of a borrowing corporation from the Rural Utilities Service knowledge of any information relevant to this insurance shall be deemed knowledge of such information by the Insured sustaining the loss.

3. Section 2.a of the EMPLOYEE DISHONESTY COVERAGE FORM is replaced by the following:

Immediately upon discovery by:

(1) The Rural Utilities Service:

(2) The borrowing corporation employing such ''employee''; or

(3) Any of the partners, officers or directors of the Administration or the borrowing corporation not in collusion with the ''employee''; of any dishonest act committed by

that ''employee'' whether before or after becoming employed by the borrowing corporation.

PART 1789—USE OF CONSULTANTS FUNDED BY BORROWERS

Subpart A—Policy and Procedures With Respect to Consultant Services Funded by Borrowers—General

Sec.
1789.150 Purpose.
1789.151 Definitions.
1789.152 Policy.
1789.153 Borrower funding.
1789.154 Eligible borrowers.
1789.155 Approval criteria.
1789.156 Proposal procedure.
1789.157 Consultant contract.
1789.158 Implementation.
1789.159 Contract administration.
1789.160 Access to information.
1789.161 Conflicts of interest.
1789.162 Indemnification agreement.
1789.163 Waiver.
1789.164—1789.165 [Reserved]

Subpart B—Escrow Account Funding and Payments

1789.166 Terms and conditions of funding agreement.
1789.167 Terms and conditions of escrow agreement.
1789.168—1789.175 [Reserved]

AUTHORITY: 7 U.S.C. 901–950b; Pub. L. 103–354, 108 Stat. 3178 (7 U.S.C. 6941 *et seq.*).

SOURCE: 61 FR 48606, Sept. 16, 1996, unless otherwise noted.

Subpart A—Policy and Procedures With Respect to Consultant Services Funded by Borrowers—General

§ 1789.150 Purpose.

This part sets forth policies and the procedures for implementing subsection (c) of section 18 of the Rural Electrification Act of 1936, as amended (7 U.S.C. 901 *et seq.*)(RE Act) which authorizes the Rural Utilities Service (RUS) to use the services of Consultants funded by the Borrowers to facilitate timely action on Applications by Borrowers for financial assistance and other approvals.

§ 1789.151 Definitions.

As used in this part:

Administrator means the Administrator of the Rural Utilities Service (RUS).

Application means a request for financial assistance under the RE Act or such other approvals as may be required of the RUS pursuant to the terms of outstanding loan or security instruments or otherwise.

Borrower means any organization which has an outstanding loan(s) made or guaranteed by RUS or its predecessor agency, the Rural Electrification Administration (REA) under the RE Act or any organization which has submitted or submits an Application before RUS.

Consultant means a person or firm which has been retained pursuant to this subpart under a contract to provide financial, legal, engineering, environmental, or other technical advice and services.

Consultant Contract means a contract for the performance of consulting services for RUS, to be paid using funds provided by a Borrower, which may be in the form of a Retainer Contract, purchase order, or other form as may be appropriate.

Escrow Account means an account established pursuant to § 1789.158.

Escrow Agreement means an agreement, between a Borrower, a Consultant and a Third-party Commercial Institution, meeting the requirements of § 1789.167.

Final Invoice means the closing Invoice prepared for a given Task Order.

Financial Consultant means a Consultant retained pursuant to this part to provide financial advisory services.

Funding Agreement means an agreement, between a Borrower and a Consultant, providing for the Borrower to fund the costs of a Task Order and otherwise meeting the requirements of § 1789.166.

Indemnification Agreement means an agreement by a Borrower meeting the requirements of § 1789.162.

Invoice means an invoice prepared by a Consultant pursuant to the terms of a Consultant Contract.

Legal Consultant means any Consultant retained pursuant to this part to provide legal services to RUS.

Notice of Proposal to Fund means a notice meeting the requirements of

§1789.156 provided to RUS by the Borrower.

Organizational conflict of interest means that because of other activities or relationships with other persons, a person is unable or potentially unable to render impartial assistance or advice to the Government, or the person's objectivity in performing the contract work is or might be otherwise impaired, or a person has an unfair competitive advantage.

Retainer Contract means a Consultant Contract providing for a minimum required payment to a Consultant irrespective of whether services are utilized by RUS thereunder.

Task Order means a written request for consultant services pursuant to the terms of a Consultant Contract.

Third-party Commercial Institution means a commercial financial institution mutually acceptable to the Borrower and the Consultant.

§1789.152 Policy.

(a) As provided in this subpart, RUS may, at its discretion, use the services of Consultants funded by a Borrower where such services will facilitate timely action on an Application by such Borrower for financial assistance or other approvals. Such Consultants may provide financial, legal, engineering, environmental or other technical advice and services in connection with the review of an Application.

(b) With the approval of RUS, a Borrower may fund the cost of consulting services in connection with the review by RUS of an Application by such Borrower. Such funding shall be provided pursuant to the terms of a Funding Agreement between the Borrower and the Consultant designated by RUS.

(c) RUS may not, without the consent of the Borrower, require, as a condition of processing any Application for approval, that the Borrower agree to pay the costs of a Consultant hired to provide services to RUS.

(d) The government shall retain sole discretion in the selection of Consultants to provide services to RUS and the form of contract utilized. RUS may either use the services of one or more Consultants retained under Retainer Contracts or the government may elect to retain a Consultant not otherwise on retainer. The government shall have sole discretion to prescribe terms and conditions of Consultant Contracts. The Borrower may bring considerations to the attention of the government which the Borrower deems pertinent to the selection process.

(e) RUS shall retain sole discretion as to whether to further pursue use of an outside consultant for the relevant application in the event the Borrower does not enter into the agreements referenced in §1789.158(c)(3)(iii) within 60 days of the government providing to the Borrower the information set forth in §1789.158(c)(3).

§1789.153 Borrower funding.

Borrowers shall use their general funds for the purposes of funding consultant services hereunder. Borrowers may not use the proceeds of loans made or guaranteed under the RE Act for costs incurred by Borrowers pursuant to the funding of consultant services for RUS.

§1789.154 Eligible borrowers.

All Borrowers are eligible to fund consultant services under this part.

§1789.155 Approval criteria.

RUS will consider approving the use of consultant services funded by a Borrower on a case by case basis taking into account, among other matters, the following:

(a) Whether such services are required to facilitate timely action on a Borrower's Application. RUS shall determine what represents timely action with respect to each Application considering, among other matters, the review period normally required for such projects by RUS and other lenders and the consequences to the Borrower of adjusting the review period.

(b) The availability of staff resources, the priorities of other projects then before RUS, and the efficiencies to be realized from the use of consultant services.

(c) Whether it is in the best interest of RUS to use Borrower-funded Consultants. Certain types of projects, such as those involving issues of program-wide significance, may not be well suited for the use of Borrower funded Consultants.

§ 1789.156 Proposal procedure.

(a) In the event RUS determines that consideration should be given to the use of a Borrower-funded consultant in connection with the review of an Application, the RUS Regional Director or the Director of the Power Supply Division, as appropriate, will discuss with the Borrower the nature of the Application and the projected review period required of RUS. If RUS concludes that the projected review period will not result in timely action on the Application, and after being so notified in writing by RUS the Borrower wishes to fund consultant services to facilitate RUS review, the Borrower shall submit to the same Director a funding proposal. The proposal shall set forth the following:

(1) Identification in the heading or caption as a Notice of Proposal to Fund Consulting Services;

(2) Borrower's REA/RUS designation;

(3) Borrower's legal name and address;

(4) A description of the Application, critical issues and concerns relating to the Application, time deadlines, and the consequences of any delays in RUS review;

(5) A description of the consulting service(s) that would facilitate timely RUS review of the Application; and

(6) Such additional documents and information as RUS may request.

(b) RUS will review the Notice of Proposal to Fund and any additional information RUS deems relevant in determining whether to proceed with procuring Borrower funded Consultants. If RUS proposes to utilize Legal Consultants, RUS must obtain the concurrence of the Office of General Counsel (OGC) of the Department of Agriculture. RUS will notify the Borrower in writing of its determination.

§ 1789.157 Consultant contract.

(a) The Federal Acquisition Regulation (FAR), 48 CFR Ch. 1, and the Agriculture Acquisition Regulation (AGAR), 48 CFR Ch. 4, shall apply to all Consultant Contracts entered into pursuant to this part except as provided in this section.

(1) Contracts for Legal Consultants shall provide for a technical representative from OGC.

(2) All Consultant Contracts shall provide for an escrow account funding mechanism pursuant to this part and for the government's sole discretion in determining whether payments are to be made from the Escrow Account to the Consultant.

(3) All Consultant Contracts shall provide that payment of all obligations for work performed thereunder must be satisfied by amounts available in the Escrow Account; with the exception of the annual retainer fee, if any, Consultants shall not be entitled to any payments from the government.

(b) The provisions of paragraph (a) of this section shall be given prominent emphasis in requests for proposals issued under this part.

§ 1789.158 Implementation.

(a) Upon making a determination to go forward with Borrower funding for consulting services, RUS shall initiate a procurement request for a Consultant to provide the services. The government may either contract with a Consultant on a case by case basis or elect to use a Consultant pursuant to an outstanding Retainer Contract. The Borrower will not be informed of the Consultant selected until such time as the government provides the information set forth in paragraph (c)(3) of this section.

(b) If the government determines to contract with a Consultant on a case by case basis, the government shall notify the Borrower of the applicable procedures.

(c) If the government determines to contract with a Consultant under an outstanding Retainer Contract, the following procedures will normally apply:

(1) Pursuant to the terms of the contract, the government will prepare a draft Task Order requesting consultant services in connection with the review of the Borrower's Application. The draft Task Order shall set forth for the Consultant's review and acceptance, a description of the services to be provided and applicable time frames for the provision of such services.

(2) The government will request that the Consultant:

(i) Notify the government as to the acceptability of the form and substance of the draft Task Order;

(ii) Notify the government as to its ability to provide a satisfactory conflict of interest certification consistent with the requirements of the FAR (48 CFR ch. 1); and

(iii) Provide a cost estimate for the draft Task Order.

(3) When the government is satisfied with the response(s) received pursuant to paragraph (c)(2) of this section, the government shall promptly provide to the Borrower:

(i) A copy of the draft Task Order identifying the Consultant;

(ii) The Consultant's cost estimate for the draft Task Order; and

(iii) Contract information required to enable the Borrower to develop a Funding Agreement, an Escrow Agreement and an Indemnification Agreement (the ''agreements'').

(4) The Borrower shall develop and submit to the government for approval executed originals of:

(i) The agreements; and

(ii) A certified copy of a resolution of the board of directors authorizing the Borrower to enter into the agreements and to take such other action as is necessary to effect the purposes of the agreements.

(5) Upon receiving written RUS approval of the agreements and the form and substance of the board resolution, the Borrower shall:

(i) Establish and fund the Escrow Account; and

(ii) Provide written notice to the government of the Escrow Account number, the funding thereof, and such other information as required pursuant to the agreements.

(6) After the Borrower has funded the Escrow Account, the government shall issue Task Order(s) for consultant services in accordance with the terms and conditions of the applicable Retainer Contract.

§1789.159 Contract administration.

The government shall be solely responsible for the administration of a Consulting Contract and shall have complete control over the scope of the Consultant's work, the timetable for performance, the standards to be applied in determining the acceptability of deliverables and the approval of payment of Invoices.

§1789.160 Access to information.

The Borrower shall not have rights in nor right of access to the work product of the Consultant. All analyses, studies, opinions, memoranda, and other documents and information provided by the Consultant pursuant to a Consulting Contract may be released and made available to the Borrower only with the approval of RUS. This section does not restrict release of information by RUS pursuant to the Freedom of Information Act (5 U.S.C. 552(a)(2)) or other legal process.

§1789.161 Conflicts of interest.

The standard for determining organizational conflicts of interest shall be as set forth in the FAR subpart 9.5 (48 CFR part 9, subpart 9.5); however, the identification of the existence of an organizational conflict of interest may be made by either the Administrator or the cognizant Contracting Officer. In the event an organizational conflict of interest is determined to exist, the cognizant Contracting Officer shall take the actions prescribed at FAR 9.504 (48 CFR 9.504) to attempt to avoid, neutralize or mitigate the conflict. Should these actions be deemed by the Administrator and the Contracting Officer to adequately resolve the conflict, the contracting action with the offeror/contractor may proceed. Should the Administrator or the Contracting Officer determine that an organizational conflict of interest still exists such that contract award or other contracting action cannot be taken (award of task/delivery order, etc.) the offeror/contractor shall be so informed by the Contracting Officer and be provided a reasonable opportunity to respond in accordance with FAR 9.504(e) (48 CFR 9.504(e)). After considering the contractor's response, if it is found by both the Administrator and Contracting Officer to remedy the conflict of interest, the contracting action may proceed. If the Administrator and Contracting Officer determine that the contractor's response does not resolve the conflict of interest, yet continuing with the contracting action with the offeror/contractor in question is considered in the best interest of the United States, a waiver in accordance with FAR 9.503 (48 CFR 9.503) may be executed. This

waiver shall be submitted under the Contracting Officer's signature and approved by the Administrator. The Administrator has been delegated Head of Contracting Activity authority by the USDA Senior Procurement Executive solely for the purpose of waiver approval.

§ 1789.162 Indemnification agreement.

As a condition of approving Borrower funding, the government will require the Borrower to enter into an Indemnification Agreement, in form and substance satisfactory to RUS, providing that the Borrower will indemnify and hold harmless the government and any officers, agents or employees of the government from any and all liability, including costs, fees, and settlements arising out of, or in any way connected with the payment of the Consultant's fee pursuant to the Consultant Contract. The Indemnification Agreement may recognize, as a condition of liability thereunder, the rights of the borrower to prompt notice, to use of counsel of its own choosing, and to participation in any settlement of a claim against which indemnification is sought.

§ 1789.163 Waiver.

RUS may waive any requirement or procedure of this subpart by determining that its application in a particular situation would not be in the government's interest, except that certain provision that the subject contracts are subject to the provisions of the FAR (48 CFR ch. 1) and AGAR (48 CFR ch. 4).

§§ 1789.164—1789.165 [Reserved]

Subpart B—Escrow Account Funding and Payments

§ 1789.166 Terms and conditions of funding agreement.

Funding Agreements between the Borrower and a Consultant shall be in form and substance satisfactory to RUS and provide for, among other matters, the following:

(a) Specific reference by number to the applicable Consulting Contract entered into between the government and the Consultant;

(b) Specific reference by number to the applicable Task Order (where applicable);

(c) A brief description of the Application;

(d) A requirement that Invoices make specific reference to:

(1) The applicable contract and Task Order(s); and

(2) The Escrow Account from which payment is to be made;

(e) A requirement that the Final Invoice for a Task Order be clearly identified as such;

(f) A description of the services to be provided by the Consultant to RUS and the applicable time frames for the provision of such services;

(g) Agreement that the Borrower shall pay for the Consultant services provided to RUS under the applicable contract through an Escrow Account established pursuant to an Escrow Agreement, the Consultant shall not provide services to RUS under the applicable contract unless there are sufficient funds in the Escrow Account to pay for such services, the Consultant shall seek compensation for services provided under the applicable contract from, and only from, funds made available through the Escrow Account, and the Consultant must submit all Invoices to the government for approval.

(h) A form of Escrow Agreement satisfactory to the Borrower, Consultant and the designated Third-party Commercial Institution;

(i) A schedule setting forth when and in what amounts the Borrower shall fund the Escrow Account;

(j) Acknowledgment by the Consultant of the Indemnification Agreement provided by the Borrower to the government; and

(k) The Funding Agreement shall not be effective unless and until approved in writing by RUS.

§ 1789.167 Terms and conditions of escrow agreement.

Escrow Agreements between and among the Borrower, Consultant and Third-party Commercial Institution shall be in form and substance satisfactory to RUS and provide for, among other matters, the following:

(a) Specific reference by number to the applicable contract for services;

(b) Specific reference by number to the applicable Task Order;

(c) Specific reference by number to the Escrow Account into which funds are to be deposited;

(d) Invoices to specifically identify the applicable contract and Task Order(s);

(e) Funds to be held in the Escrow Account by the escrow agent until paid to the Consultant pursuant to the government's authorization;

(f) The Escrow Account to be closed and all remaining funds remitted to the Borrower after payment of the Final Invoice, unless otherwise directed by the government;

(g) The government, the Consultant and the Borrower to have the right to be informed, in a timely manner and in such form as they may reasonably request, as to the status of and activity in the Escrow Account; and

(h) The Escrow Agreement shall not be effective unless and until approved in writing by RUS.

§§1789.168—1789.175 [Reserved]

PART 1792—COMPLIANCE WITH OTHER FEDERAL STATUTES, REGULATIONS, AND EXECUTIVE ORDERS

Subparts A and B—[Reserved]

Subpart C—Seismic Safety of Federally Assisted New Building Construction

Sec.
1792.101 General.
1792.102 Definitions.
1792.103 Design and construction standards for seismic safety.
1792.104 Seismic safety certifications.

AUTHORITY: 7 U.S.C. 901 *et seq.*; 42 U.S.C. 7701 *et seq.*; Pub. L. 103–354, 108 Stat. 3178 (7 U.S.C. 6941 *et seq.*); E.O. 12699 (3 CFR, 1990 Comp., p. 269).

SOURCE: 58 FR 32437, June 10, 1993, unless otherwise noted.

Subparts A and B—[Reserved]

Subpart C—Seismic Safety of Federally Assisted New Building Construction

§1792.101 General.

(a) The Earthquake Hazards Reduction Act of 1977 (42 U.S.C. 7701 *et seq.*) was enacted to reduce risks to life and property through the establishment and maintenance of an effective earthquake hazards reduction program (the National Earthquake Hazards Reduction Program or NEHRP). The Federal Emergency Management Agency (FEMA) is designated as the agency with the primary responsibilities to plan and coordinate the NEHRP. This program includes the development and implementation of feasible design and construction methods to make structures earthquake resistant. Executive Order 12699 of January 5, 1990, Seismic Safety of Federal and Federally Assisted or Regulated New Building Construction (3 CFR, 1990 Comp., p. 269), requires that measures to assure seismic safety be imposed on federally assisted new building construction.

(b) This subpart identifies acceptable seismic standards which must be employed in new building construction funded by loans, grants, or guarantees made by the Rural Utilities Service (RUS) or the Rural Telephone Bank (RTB) or through lien accommodations or subordinations approved by RUS or RTB. This subpart implements and explains the provisions of the loan contract utilized by the RUS for both electric and telephone borrowers and by the RTB for its telephone borrowers requiring construction certifications affirming compliance with the standards set out in §1792.103 of this subpart.

(c) This subpart applies to both RUS and RTB borrowers. For the purposes of RTB borrowers, as used in this subpart, RUS means RTB and Administrator means Governor.

(d) This subpart applies to the recipients of RUS grants.

(e) This subpart applies to the federally assisted buildings for which designs are prepared on or after the effective date hereof.

§ 1792.102 Definitions.

As used in this subpart, the following terms have the following meaning:

Administrator—Administrator of RUS or the Governor of the Rural Telephone Bank or his or her designee.

Borrower—An entity which borrows or seeks to borrow money from, or arranges financing with the assistance of RUS through guarantees, lien accommodations or lien subordinations.

Building—Any structure, fully or partially enclosed, used or intended for sheltering persons or property.

Federally assisted—The provision of financing assistance by RUS through loans, loan guarantees, grants, and lien accommodations and subordinations.

Grant recipient—Any entity which receives a grant from RUS.

Lien accommodation—The consensual sharing of the government's (RUS's) lien on property or the release of government's lien on property.

Lien subordination—Agreement that the government's (RUS) lien on property will rank below the lien of another entity.

NEHRP—National Earthquake Hazards Reduction Program.

REA means the Rural Electrification Administration formerly an agency of the United States Department of Agriculture and predecessor agency to RUS with respect to administering certain electric and telephone loan programs.

Registered—A person licensed by the State(s) or Authority(ies) to perform architectural or engineering services in the State(s) where construction occurs.

RUS means the Rural Utilities Service, an agency of the United States Department of Agriculture established pursuant to Section 232 of the Federal Crop Insurance Reform and Department of Agriculture Reorganization Act of 1994 (Pub. L. 103–354, 108 Stat. 3178), successor to REA with respect to administering certain electric and telephone programs. See 7 CFR 1700.1.

Seismic—To do with or caused by earthquakes.

Seismic factor— The factor used in design based on the seismic zone (Z = .4, .3, .2, etc.) or based on acceleration (Av or Aa, whichever controls) for the location of the building, and given on the seismic maps in the model codes.

State—Each of the 50 States of the United States, the District of Columbia, and territories and possessions of the United States which are authorized to receive loans, loan guarantees, or grants from RUS.

[58 FR 32437, June 10, 1993, as amended at 59 FR 66440, Dec. 27, 1994]

§ 1792.103 Design and construction standards for seismic safety.

(a) Borrowers and grant recipients of grants must utilize in the design and construction of federally assisted buildings, the seismic provisions of the most recent edition of those standards and practices that are substantially equivalent to or exceed the seismic safety level in the most recent or immediately preceding edition of the NEHRP Recommended Provisions for the Development of Seismic Regulation for New Buildings. The NEHRP Recommended Provisions are updated triennially.

(b) Each of the following model codes has been found to provide a level of seismic safety substantially equivalent to that provided by the use of the 1988 NEHRP Recommended Provisions and appropriate for federally assisted new building construction:

(1) 1991 International Conference of Building Officials (ICBO) Uniform Building Code;

(2) 1992 Supplement to the Building Officials and Code Administration, International, Inc. (BOCA) National Building Code; and

(3) 1992 Amendments to the Southern Building Code Congress (SBCC) Standard Building Code.

(c) The model codes identified in § 1792.103(b) can be obtained from the following organizations:

(1) *ICBO Uniform Building Code.* International Conference of Building Officials, Austin Regional Office, 9300 Jollyville Road, suite 101, Austin, Texas 78759–7455.

(2) *BOCA National Building Code.* Building Officials and Code Administrators International, Inc., 4051 West Flossmoor Road, Country Club Hills, Illinois 60478–5795.

(3) *SBCC Standard Building Code.* Southern Building Code Congress International, Inc., 900 Montclair Road, Birmingham, Alabama 35213–1206.

(d) The NEHRP Recommended Provisions for the Development of Seismic Regulations for New Building is available from the Office of Earthquakes and Natural Hazards, Federal Emergency Management Agency, 500 C Street, SW., Washington, DC 20472.

§ 1792.104 Seismic safety certifications.

Borrowers and grant recipients must with respect to federally assisted buildings:

(a) Provide to RUS a written acknowledgement from a registered architect or engineer responsible for the design of such building project stating that the seismic provisions of one of the model codes listed in § 1792.103(b) of this subpart will be used in the design and construction of the building project. This written acknowledgement must include a description of the building project, estimated costs, approximate square footage, the seismic factor for the building location, and the identification and date of the Model Code to be used in the seismic design of the building. The written acknowledgement must be received by RUS prior to the preparation of preliminary plans and specifications for the building.

(b) Include on the final plans and specifications, which are otherwise required to be submitted to RUS, the identification and date of the model code that was used for the seismic design of the building project and the seismic factor for the building location. The plans and specifications must be dated, signed, and sealed by the registered architect or engineer.

(c) Provide to RUS, upon completion of construction, the written certification of the architect or engineer responsible for the design of the project that the building project was designed to meet and that the completed construction meets the seismic requirements set forth in the model code identified in the written acknowledgement required in paragraph (a) of this section. This certification must include the following information:

(1) Project designation and project owner's name;

(2) Name of architectural/engineering firm;

(3) Name and registration no. (for the State in which the building project is located) of the certifying architect or engineer;

(4) Purpose and location of the facility;

(5) Seismic factor for the building location;

(6) The code identity and the date of the model code used for the design and construction of the building project(s);

(7) Total square footage of the building project;

(8) Total cost of the building project; and

(9) Estimated cost of the structural systems affected by the requirements of this subpart.

(d) The written acknowledgement required by paragraph (a) of this section, the plans and specifications referred to in paragraph (b) of this section, and the written certification required by paragraph (c) of this section are to be submitted to the appropriate Director of the Regional Electric Division, Power Supply Division, Regional Telephone Division, or Rural Development Assistance Staff. When plans and specifications are not otherwise required to be submitted to the RUS Washington's offices, the data required to be included on the plans and specifications by paragraph (b) of this section must be submitted in letter form to the appropriate Director prior to the release of the plans and specifications for construction purposes.

(The information and recordkeeping requirements of this section have been approved by the Office of Management and Budget (OMB) under the control number 0572-0099.)

PART 1794—ENVIRONMENTAL POLICIES AND PROCEDURES FOR ELECTRIC AND TELEPHONE BORROWERS

Subpart A—General

Sec.

1794.1 Purpose.
1794.2 Actions requiring environmental review.
1794.3 Compliance.
1794.4 Trivial violations.
1794.5 Responsible officials.
1794.6 Metric units.
1794.7 Guidance.

Subpart B—Implementation of the National Environmental Policy Act

1794.10 Apply NEPA early in the planning process.
1794.11 Consideration of alternatives.
1794.12 Public involvement.
1794.13 Interagency involvement.

Subpart C—Provisions Applicable to EA or EIS Preparation

1794.20 Interagency coordination.
1794.21 Limitation on actions during the NEPA process.
1794.22 Tiering.

Subpart D—Classification of Proposals

1794.30 Control.
1794.31 Categorical exclusions (proposals normally requiring neither an EIS nor an EA.)
1794.32 Proposals normally requiring an EIS.
1794.33 Proposals normally requiring an Environmental Assessment without scoping.
1794.34 Proposals normally requiring an Environmental Assessment with scoping.
1794.35 Work plan proposals.

Subpart E—Procedure for Categorical Exclusions

1794.40 General.
1794.41 Proposals with no BER.
1794.42 BER proposals.

Subpart F—Procedure for Proposals Normally Requiring an EIS

1794.50 Normal sequence.
1794.51 Preparation for scoping.
1794.52 Scoping meeting.
1794.53 Borrower's environmental analysis.
1794.54 EIS.
1794.55 Timing of agency action.

Subpart G—Procedure for Environmental Assessment Proposals Without Scoping

1794.60 General.
1794.61 Document requirements.
1794.62 Notice of availability.
1794.63 FONSI and notice requirements.
1794.64 Timing of agency action.

Subpart H—Procedure for Environmental Assessment Proposals With Scoping

1794.70 General.
1794.71 RUS determination.
1794.72 Notice requirements for a FONSI determination.
1794.73 Timing of agency action for FONSI determination.

Subpart I—Adoption of Environmental Documents

1794.80 General.
1794.81 Adoption as a final EIS.
1794.82 Adoption as a draft EIS.
1794.83 Adoption of an EA.
1794.84 Adoption of environmental materials.
1794.85 Timing of agency action.

Subpart J—Supplemental EIS

1794.90 Circulation and notices.
1794.91 Timing of agency action.

APPENDIX A TO PART 1794—PROCEDURE FOR PROPOSALS WHICH NORMALLY REQUIRE AN EIS

AUTHORITY: National Environmental Policy Act of 1969 (NEPA) (42 U.S.C. 4321 *et seq.*); Pub. L. 103–354, 108 stat. 3178 (7 U.S.C. 6941 *et seq.*); Council on Environmental Quality Regulations for Implementing the Procedural Provisions of NEPA (40 CFR parts 1500–1508); Executive Order (EO) 11988, Floodplain Management; and EO 11990, Protection of Wetlands.

SOURCE: 49 FR 9550, Mar. 13, 1984, unless otherwise noted.

Subpart A—General

§ 1794.1 Purpose.

This part contains the policies and procedures of the Rural Utilities Service (RUS) for implementing the National Environmental Policy Act (NEPA), as amended (42 U.S.C. 4321 *et seq.*); the Council on Environmental Quality (CEQ) Regulations for Implementing the Procedural Provisions of NEPA (40 CFR parts 1500–1508); and certain related statutes, regulations and orders. Among those statutes, regulations and orders are the National Historic Preservation Act of 1966, as amended (16 U.S.C. 470 *et seq.*); the Advisory Council on Historic Preservation regulations on Protection of Historic and Cultural Properties (36 CFR Part 800); the Endangered Species Act of 1973, as amended (16 U.S.C. 1531 *et seq.*); Executive Order (EO) 11514, ''Protection and Enhancement of Environmental Quality''; EO 11593, ''Protection and Enhancement of the Cultural Environment''; EO 11988, ''Floodplain Management''; EO 11990, ''Protection of Wetlands''; and the Farmland Protection Policy Act (Pub. L. 97–98).

§ 1794.2 Actions requiring environmental review.

The provisions of part 1794 apply to proposed administrative actions by RUS including, without limitation, loans, loan guarantees, reclassification of loan funds, lien accommodations, and approvals provided pursuant to loan contracts and security instruments (*e.g.*, approvals of the use of the general funds).

§ 1794.3 Compliance.

The effective date of provisions contained in part 1794 is the date of publication of the final rule in the FEDERAL REGISTER. Any environmental document accepted or prepared by RUS prior to the effective date may be developed in accordance with the RUS environmental requirements in effect at the time the document was accepted or prepared by RUS.

§ 1794.4 Trivial violations.

It is the intent of this part that a trivial violation of its provisions will not give rise to an independent cause of action.

§ 1794.5 Responsible officials.

The agency contact points for environmental matters shall be the Assistant Administrator, Electric or Telephone (as appropriate); Rural Utilities Service; U.S. Department of Agriculture; South Building, Washington, DC 20250. The Assistant Administrators, Electric and Telephone, are responsible for determining the proper definition of proposals and the need for the preparation and approval of draft Environmental Impact Statements (EIS). Final EIS's will be issued and approved by the Administrator.

§ 1794.6 Metric units.

It is RUS's policy to prepare environmental documents using metric units with British system equivalents in parentheses. Environmental documents prepared by or for an RUS borrower (Borrower) should follow the same format.

§ 1794.7 Guidance.

For further guidance in the preparation of notices and environmental documents RUS has prepared an RUS Environmental Guide. A copy of this RUS Environmental Guide is available upon request to the Assistant Administrator, Electric or Assistant Administrator, Telephone; Rural Utilities Service; U.S. Department of Agriculture, Washington, DC 20250.

Subpart B—Implementation of the National Environmental Policy Act

§ 1794.10 Apply NEPA early in the planning process.

The environmental review process requires early coordination with and involvement of RUS. Borrowers should consult with RUS at the earliest stages of planning for any proposal which may require RUS action. Since planning efforts and environmental evaluation for power supply facilities, including power plants, transmission lines, coal or other fuel development, are interrelated, these activities should take place within the same time frame.

§ 1794.11 Consideration of alternatives.

In determining what are reasonable alternatives, RUS will consider a number of factors including, but not limited to, state of the technology, availability of resources and the time frame in which the identified need must be fulfilled.

§ 1794.12 Public involvement.

In carrying out its responsibilities under NEPA, RUS shall make diligent efforts to involve the public in the environmental review process through the following means:

(a) RUS notices required by part 1794 shall be published in the FEDERAL REGISTER and shall describe the nature, location and extent of the proposed action and indicate the availability and location of additional information.

(b) Borrower's notices, when required by this part or otherwise required by RUS, shall consist of both a legal notice and a paid advertisement published in a timely manner in a newspaper or newspapers of general circulation in the counties in which the proposal will take place or such other places as RUS determines. It shall generally describe the nature, location and extent of the Borrower's proposal and

indicate the availability and location of additional information. If both the paid advertisement and legal notice appear in the same edition, the advertisement need not be lengthy and can refer the reader to the legal notice for a more detailed explanation. The Borrower shall consult with RUS prior to issuance of Borrower's notices where an EIS or Environmental Assessment (EA) will be prepared.

(c) The Borrower shall submit to RUS, as soon as practicable after publication, copies and publication dates of all Borrower's legal notices and paid advertisements published. A copy of all comments received by the Borrower (including the Borrower's position, if any) concerning environmental aspects of the proposal shall be provided to RUS in a timely manner.

(d) Public hearings or meetings may be held at reasonable times and locations concerning environmental aspects of a proposed action in all cases where, in the Assistant Administrator's opinion, the need for hearings or meetings is indicated in order to develop adequate information on the environmental implications of the proposed action. The following shall be required in connection with a meeting or a hearing:

(1) Where an environmental document is the subject of the hearing or meeting, that document will be made available to the public at least ten (10) days in advance.

(2) Any person, organization or government body desiring to make a statement at the hearing or meeting may make such statement in writing or orally. Public hearings or meetings normally will be informal and will generally be confined to the environmental aspects of the proposal.

(3) RUS notice shall be published at least thirty (30) days before the hearings or meetings. The Borrower's notice of the hearings or meetings shall be published at least ten (10) days but no more than thirty (30) days before the hearings or meetings. RUS shall determine the counties in which the Borrower's notice shall be published in newspapers of general circulation to assure that persons most likely to be affected by the proposal will be made aware of the hearings. The notice shall present the date, time, location and purpose of the hearing or meeting. If an environmental document is the subject of the hearing or meeting, the notice shall inform the public where it can be obtained or is available for review.

(e) A list of RUS administrative actions for which EIS's and EA's are being prepared or contemplated will be available for public inspection at RUS's offices in Washington, DC.

§ 1794.13 Interagency involvement.

In carrying out its responsibilities under NEPA, RUS shall, to the extent practicable, coordinate its environmental review and combine its meetings and hearings with those of other Federal, state and local agencies. The Borrower shall inform RUS of potential involvement of other agencies in the proposal at the earliest practicable time to facilitate such coordination.

Subpart C—Provisions Applicable to EA or EIS Preparation

§ 1794.20 Interagency coordination.

(a) Whenever practicable, RUS will encourage the use of a lead agency in preparation of an EIS or EA so that a single document and review process will cover all Federal agency actions arising from the proposal or directly related group of proposals. It is the policy of RUS to volunteer to act as lead agency in the preparation of an EA or EIS when the Borrower so requests, and when RUS would normally prepare an EA or EIS for the proposal.

(b) Where RUS acts as a cooperating agency, RUS shall rely upon the lead agency's procedures for implementing NEPA and CEQ regulations in the preparation and issuance of an EA or EIS, unless the lead and cooperating agencies agree to a modification of these procedures.

(1) RUS shall request that the lead agency indicate that RUS is a cooperating agency in all NEPA related notices published for the proposal. In addition, RUS shall request that the lead agency permit RUS to review and comment on the EA or draft and final EIS prior to issuance.

(2) The Borrower shall inform RUS in a timely manner of its involvement in

a proposal where another Federal agency is preparing an EIS or EA to permit RUS to adequately fulfill its duties as a cooperating agency.

(c) Where practicable and in order to eliminate duplication and delay, RUS will coordinate its NEPA process with state and local environmental procedures. Where state or local agencies control siting of electric transmission lines or electric generating stations, RUS shall consult and coordinate with those state and local agencies in determining what are the reasonable siting and route alternatives.

§ 1794.21 Limitations on actions during the NEPA process.

In determining which Borrower activities related to a proposal requiring development of an EA or EIS may be approved prior to completion of the NEPA process, RUS must determine, among other matters that:

(a) The activity will not have an adverse environmental impact. For example, purchase of water rights, optioning or transfer of land title, or continued use of land as historically employed will not have an adverse environmental impact. However, site preparation or construction at or near the proposed site (*e.g.*, rail spur) or development of a related facility (*e.g.*, opening a captive mine) normally will have an adverse environmental impact.

(b) The expenditure is ''minimal.'' To be minimal the expenditure:

(1) Must not exceed the amount of loss which the borrower could absorb without jeopardizing the government's security interest in the event the proposed project is not approved by the Administrator, and

(2) Must not compromise the objectivity of RUS's environmental review. Notwithstanding other considerations, expenditures up to 10 percent of the proposed project cost normally will not compromise RUS's objectivity.

§ 1794.22 Tiering.

It is RUS's policy to tier EIS's and EA's where:

(a) It is practicable, and

(b) There will be a reduction of delay and paperwork, or where better decisionmaking will be fostered.

[49 FR 9550, Mar. 13, 1984; 49 FR 10083, Mar. 19, 1984]

Subpart D—Classification of Proposals

§ 1794.30 Control.

For environmental review purposes, RUS has identified and set forth categories of Borrower proposals. A Borrower or Borrowers may propose to participate with other parties in the ownership of a project where the Borrowers do not have sufficient control and responsibility to alter the development of the project. In such a case the proposal will be considered a categorical exclusion regardless of the category into which the proposal would otherwise be included. Where the Borrowers propose to cumulatively own 5 percent or less of a project, the proposal will normally be considered a categorical exclusion. Where the Borrowers propose to cumulatively own 33⅓ percent or more of a project, the proposal will be treated in its usual category. Where the Borrowers propose to cumulatively own more than 5 percent but less than 33⅓ percent of a project, RUS will determine whether the Borrowers have sufficient control and responsibility to alter the development of the project. Consideration will be given to such factors as: (a) Whether construction would be completed regardless of RUS financing assistance; (b) the stage of project planning and construction; (c) total Borrower participation; (d) participation percentage of each utility in the project; and (e) managerial arrangements and contractual provisions.

§ 1794.31 Categorical exclusions (proposals normally requiring neither an EIS nor an EA).

(a) Borrower proposals that do not individually or cumulatively have a significant effect on the environment and do not normally involve significant unresolved conflicts concerning alternate use of available resources, do not

require an EIS or EA. In order to provide for extraordinary circumstances, such proposals may require development of a Borrower's Environmental Report (BER) or the equivalent.

(b) Certain types of Borrower proposals do not require a BER. Proposals of this type are subject to the requirements of § 1794.41. Proposals within this classification are:

(1) Purchase of land where use will remain unchanged.

(2) Routine approvals made pursuant to loan and security documents (*e.g.*, contracts for bulk commodities, fuel, goods and services, capital credit retirements, technical specifications).

(3) Agreements for transmission, wheeling, interconnection with, power purchase from, or sale to other utilities where no associated Borrower construction or financing of construction is involved.

(4) Additional or substitute financing assistance for proposals which have previously received environmental review and approval from RUS, provided that environmental considerations have not changed.

(5) Rehabilitation or reconstruction of roads, railroad tracks, roadbed, bridges and other transportation facilities within transportation rights-of-way or generating facility sites where there is no substantial increase in use. A description of the rehabilitation or reconstruction shall be provided to RUS.

(6) Primary fuel or mineral contracts where, considering all the facts and circumstances, the Borrower does not have effective control over or responsibility to alter the development of the specific fuel or mineral source (*e.g.*, mine).

(7) Changes or additions to existing substations or switching stations or external changes to buildings or small structures requiring new physical disturbance or fencing of less than 0.4 hectare (0.99 acre). A description of changes and additions shall be provided to RUS.

(8) Internal modifications or equipment additions (*e.g.*, computer facilities, relocating interior walls) to small structures or buildings.

(9) Internal or minor external changes to electric generating or fuel processing facilities and related support facilities where there is negligible impact on the outside environment. A description of the changes shall be provided to RUS.

(10) Ordinary maintenance or replacement of equipment or small structures (*e.g.*, line support structures, microwave facilities, valves).

(11) The construction of telephone and communication lines and cables at existing power related facilities sites.

(12) Supervisory control and data acquisition systems (SCADA) and energy management systems involving no new external construction.

(13) Testing work (*e.g.*, test borings or cores, water test wells).

(14) Studies and engineering undertaken to define a proposal or alternatives sufficiently so that environmental effects can be assessed.

(15) The construction of electric power lines within an existing substation, switching station or electric generating facility site. A description of the facilities to be constructed shall be provided to RUS.

(16) Contracts for certain items of equipment which are part of a proposal for which RUS is preparing an EA or EIS, and which meet the limitations on actions during the NEPA process set forth in § 1794.21 (*e.g.*, long lead time items such as turbines or boilers).

(17) Internal RUS administrative actions (*e.g.*, personnel actions, procurement) and RUS bulletins that do not concern environmental matters or substantial facility design, construction or maintenance practices.

(c) Certain types of Borrower proposals normally require Borrower submission of a BER or its equivalent. Proposals of this type are subject to the requirements of § 1794.42. Proposals within this classification are:

(1) The construction of electric power lines and associated facilities designed for or capable of operation at a nominal voltage of either:

(i) Less than 69 kV (low side) or

(ii) Less than 230 kV (low side) if both:

(A) No more than 40 kilometers (24.85 miles) of power line are involved, and

(B) Substations and switching stations require new physical disturbance or fencing of no more than 2 hectares

(4.94 acres) at any single site nor more than 4 hectares (9.88 acres) for all sites.

(2) The construction of electric power lines where less than 5 kilometers (3.11 miles) of line are involved.

(3) The construction of telephone and communication lines, cables and facilities.

(4) The construction of other small structures or buildings such as microwave facilities, cooperative headquarters, maintenance facilities, etc., involving no more than 2 hectares (4.94 acres) of physical disturbance or fencing.

(5) Participation by a Borrower(s) in any proposed project where total Borrower financial participation in the underlying project will be five (5) percent or less.

(6) Purchase of existing facilities or a portion thereof where use or operation will remain unchanged and which presently are in compliance with environmental laws and regulations.

(7) Additional bulk commodity storage (*e.g.*, coal, peat, lignite, limestone, etc.) within existing generating station boundaries.

(8) SCADA and energy management systems which require new external construction.

(9) Reconductoring or upgrading of existing telephone or power lines where either the same or substantially equivalent support structures at the approximate existing support structure locations are used.

(10) Proposals designed to reduce the amount of pollutants released into the environment (*e.g.*, precipitators, baghouse or scrubber installation, coal washing plant and equipment) which have no other environmental impact outside of the existing facility site.

(11) Changes or additions to existing substations or switching stations or external changes to buildings or small structures requiring 0.4 hectare (0.99 acre) or more but no more than 2 hectares (4.94 acres) of new physically disturbed land or fenced property.

(12) Construction of diesel electric generating facilities of less than 3 megawatts (MW) (nameplate rating) at an existing generating site. All new associated facilities and electric power lines related to the generating proposal shall be covered in the BER.

(13) Modification of an existing hydroelectric project or dam that will have a total installed capacity of 1.5 MW (nameplate rating) or less and which will result in no change in the normal maximum surface area or normal maximum surface elevation of an existing impoundment. All new associated facilities and electric power lines related to the generating proposal shall be covered in the BER.

§ 1794.32 Proposals normally requiring an EIS.

(a) Actions that may significantly affect the quality of the human environment require preparation of an EIS. An EIS normally will be required in connection with Borrower proposals for construction and operation of the following types of facilities:

(1) New electric generating facilities of 40 MW or more (nameplate rating) other than diesel generators or combustion turbines. All new associated facilities and electric power lines related to the generating proposal shall be covered in the EIS.

(2) A new mining operation when the Borrower or Borrowers have effective control (*e.g.*, dedicated mine or purchase of a substantial portion of the mining equipment).

(b) Proposals of this type are subject to the requirements of §§ 1794.50 to 1794.55.

§ 1794.33 Proposals normally requiring an Environmental Assessment without scoping.

(a) RUS will normally prepare an EA for all proposals which are neither categorical exclusions (§ 1794.31) nor are proposals normally requiring an EIS (§ 1794.32). For certain actions within this class, scoping and document procedures set forth in §§ 1794.50 to 1794.53 shall be followed (see § 1794.34). The following are examples of specific Borrower proposals which normally require an EA without scoping.

(1) Construction of combustion turbine and diesel generating facilities of less than 40 MW (nameplate rating), except for diesel generating facilities of less than 3 MW (nameplate rating) at an existing generating site. All new associated facilities and electric power

lines related to the subject generating proposal shall be covered in the EA.

(2) Construction of any other type of new electric generating facilities of less than 5 MW (nameplate rating). All new associated facilities and electric power lines related to the subject generating proposal shall be covered in the EA.

(3) Modification of an existing hydroelectric project or dam if:

(i) The project or dam will have a total installed capacity of more than 1.5 MW (nameplate rating); or

(ii) The modification will result in a change in the normal maximum surface area or normal maximum surface elevation of an existing impoundment.

All new associated facilities and electric power lines related to the generating proposal shall be covered in the EA.

(4) The expansion of a mining or drilling operation or a new drilling operation.

(5) Purchase of existing facilities or a portion thereof which are presently in violation of Federal, state or local environmental laws or regulations.

(6) The construction of electric power lines and related facilities designed for or capable of operation at a nominal voltage of 230 kV or more (low side) not covered by § 1794.31 (categorical exclusions) or § 1794.34 (normally requiring an EA with scoping).

(7) The construction of electric power lines and related facilities designed for or capable of operation at a nominal voltage of 69 kV or more (low side) but less than 230 kV (low side) where:

(i) More than 40 kilometers (24.85 miles) of power line are involved or

(ii) Substations and switching stations require new physical disturbance of fencing of more than 2 hectares (4.94 acres) at any single site or more than 4 hectares (9.88 acres) for all sites.

(8) Proposals designed to reduce the amount of pollutants released into the environment which may have other environmental impacts outside of the existing facility site.

(9) Issuance of RUS regulations concerning environmental matters or substantial facility design, construction or maintenance practices.

(b) Proposals of this type are subject to the requirements of §§ 1794.60 to 1794.64.

§ 1794.34 Proposals normally requiring an Environmental Assessment with scoping.

(a) There are certain actions which require the use of a scoping procedure in the development of an EA. After the scoping process is completed and an acceptable Environmental Analysis has been submitted by the Borrower, RUS will determine whether to prepare an EIS or finding of no significant impact (FONSI). The types of proposals falling within this category are:

(1) The construction of electric power lines and related facilities designed for or capable of operation at a nominal voltage of 230 kV or more (low side) where:

(i) More than 40 kilometers (24.85 miles) of power line are involved; or

(ii) Substations and switching stations require new physical disturbance or fencing involving a total of more than 2 hectares (4.94 acres) at any single site or more than 8 hectares (19.77 acres) for all sites.

(2) Construction of combustion turbines and diesel generators of 40 MW (nameplate rating) or more; and the construction of any other type of electric generating facilities of 5 or more MW but less than 40 MW (nameplate rating). All new associated facilities and electric power lines related to the subject generating project shall be covered in any EA or EIS prepared.

(b) Proposals of this type are subject to the requirements of §§ 1794.70 to 1794.73.

§ 1794.35 Work plan proposals.

Borrowers frequently request financing assistance for a number of relatively minor unrelated projects all of which are described in a single ''work plan.'' In determining the proper environmental classification of construction projects contained in a work plan, RUS will consider as a single proposal all related construction included in the work plan and any additional construction related thereto which, although not included in the work plan, is reasonably foreseeable.

Subpart E—Procedure for Categorical Exclusions

§1794.40 General.

The following procedure, which applies to action classified as categorical exclusions in §1794.31 hereof, provides RUS with information necessary to determine if the proposed action meets the criteria for a categorical exclusion. Where, because of extraordinary circumstances, an action may have a significant effect on the quality of the human environment, RUS may require additional environmental documentation.

§1794.41 Proposals with no BER.

Normally the Borrower shall not submit a BER for proposals included in §1794.31(b). However, if so noted in §1794.31(b) the Borrower shall submit a description of the proposal. Such description shall include, where applicable, a plan for erosion and sedimentation control. No public notice is required unless the proposal is located in and may affect wetlands or floodplains.

§1794.42 BER proposals.

For proposals included in §1794.31(c) the Borrower normally shall submit a BER or its equivalent which will assist RUS in identifying extraordinary circumstances in which a normally excluded action may have a significant environmental effect. No public notice is required unless the proposal is located in and may affect wetlands or floodplains. RUS shall not permit construction or other activities which would have an environmental effect until it has received, reviewed and accepted an adequate BER.

Subpart F—Procedure for Proposals Normally Requiring an EIS

§1794.50 Normal sequence.

Appendix A to part 1794 (Procedure for Proposals which Normally Require an EIS) describes the normal sequence of EIS preparation to be employed by RUS. For proposals normally requiring an EA with scoping (see §1794.34), the NEPA process shall proceed in the same manner as for proposals normally requiring an EIS through the point at which the Environmental Analysis is submitted (see §1794.53). After the Environmental Analysis has been submitted, RUS shall make a judgment to prepare either an EIS or a finding of no significant impact (FONSI).

§1794.51 Preparation for scoping.

(a) RUS has developed a general approach to the NEPA process, including scoping, for proposals normally requiring an EIS (§1794.32) and for proposals normally requiring an EA with scoping (§1794.34). Scoping procedures are designed to determine the scope of issues to be addressed and to identify significant issues related to a proposed action. RUS may require scoping procedures to be followed for other proposals where appropriate to achieve the purposes of NEPA.

(b) As soon as practicable, RUS will publish its notice of intent to prepare an EIS (see 40 CFR 1508.22). The Borrower shall publish, in a timely manner, a notice similar to RUS's notice. If the proposal is one which normally requires an EA with scoping (§1794.34), the notice shall indicate that: (1) RUS may prepare an EA before or without necessarily preparing an EIS, and (2) the decision whether or not to prepare an EIS will be based on information received from the Borrower, Federal, state and local agencies, organizations and the general public during the scoping process, preparation of the Environmental Analysis, and the review period for a finding of no significant impact (if originally issued).

(c) As part of the early project planning the Borrower should consult with expert and interested Federal, state and local agencies to inform them of the proposed project, and to identify permits and approvals which must be obtained and administrative procedures which must be followed.

(d) Before any scoping meetings are held RUS shall require the Borrower to submit two environmental documents:

(1) Alternative evaluation;

(2) Siting study (for electric generation or new mines) or Macro-Corridor study (for electric transmission).

(e) The Borrower is encouraged to hold additional public information meetings in the general location of the

proposed project and any reasonable alternatives when such borrower meetings will make the scoping process more meaningful. A written summary of the comments made at such meetings should be submitted to RUS as soon as practicable after the meetings.

§ 1794.52 Scoping meeting.

(a) Both RUS and the Borrower shall publish a notice of the public scoping meeting which shall:

(1) Provide a brief description of the nature and location of the Borrower's recommended alternative (if any) and reasonable alternatives;

(2) State the intent to hold public scoping meetings, giving the date, time, location and purpose of these meetings;

(3) State where copies of the scoping documents are available for public review, which shall include the Borrower's headquarters, RUS offices in Washington, and other locations as determined by RUS;

(4) Provide the name and address of the person to whom questions and comments should be sent;

(5) Set forth a thirty (30) day period after the scoping meeting(s) to enter comments into the meeting record.

(b) The RUS notice will be published at least thirty (30) days prior to the meeting(s). The Borrower's notice shall be published at least ten (10) days, but not more than thirty (30) days prior to the meeting(s).

(c) The scoping meeting(s) will normally be held in the vicinity of the Borrower's recommended alternative and, where appropriate, the reasonable alternatives or such other places as RUS determines will best afford an opportunity for public involvement. Any person, organization or government body desiring to make a statement at the meeting may make such statement in writing or orally. A record will be made of the scoping meeting.

(d) As soon as practicable after the scoping meetings(s), RUS, as lead agency, shall determine the significant issues to be analyzed in depth and identify and eliminate from detailed study the issues which are not significant or which have been covered by prior environmental review. RUS will develop a proposed scope for further environmental study and review. A copy of this proposed scope will be sent to cooperating agencies and the Borrower, which shall be given thirty (30) days to comment on its adequacy and emphasis. After expiration of the thirty (30) day period RUS will provide formal guidance to the Borrower concerning the scope of environmental study to be performed and information to be gathered.

§ 1794.53 Borrower's environmental analysis.

(a) After scoping procedures have been completed, RUS shall require the Borrower to develop and submit an Environmental Analysis satisfactory in form and substance to RUS. The Environmental Analysis will be prepared under the guidance of the RUS staff and all information set forth therein shall be subject to independent verification by RUS.

(b) The Environmental Analysis will normally provide a basis for preparation of RUS's EA or EIS and may be made an appendix to the RUS document. After RUS has reviewed and found an Environmental Analysis to be satisfactory, the Borrower will be required to provide RUS with a sufficient number of copies of the Environmental Analysis to satisfy RUS's distribution plan.

(c) The Environmental Analysis shall include a summary of the construction and operation monitoring and mitigation measures for the proposed project. This summary shall appear in the draft and final EIS. These measures may be revised as appropriate in response to comments on the draft and final EIS and other information. These measures also shall be incorporated by summary or reference into RUS's Record of Decision.

§ 1794.54 EIS.

(a) After a draft or final EIS has been prepared, RUS and the Borrower shall issue a notice of availability for the document. The notice shall:

(1) Provide a brief description of the nature and location of the preferred and reasonable alternatives;

(2) State the availability of a draft or final EIS for public review;

(3) State how copies of the EIS can be obtained and where copies are available for public review which shall include the Borrower's headquarters, RUS offices in Washington, DC, selected libraries in the area of the preferred and reasonable alternatives and such other reasonable places as RUS shall select;

(4) Provide the name and address of the person to whom questions and comments should be sent;

(5) Set forth the time period for review and comment. This time period normally shall be forty-five (45) days for a draft EIS and thirty (30) days for a final EIS, measured from the date that the U.S. Environmental Protection Agency's notice or the Borrower's notices are first published, whichever is later.

RUS and the Borrower notices for the final EIS shall also request persons, organizations or governmental bodies which wish to be notified when the Record of Decision is available to inform RUS of such interest.

(b) In addition to circulation required by 40 CFR 1502.19, draft and final EIS's (or summaries thereof, at RUS's discretion) shall be circulated to the appropriate state, regional, and metropolitan clearinghouses.

(c) Where a final EIS does not require that substantial changes be made in the draft EIS, RUS may document required changes through errata sheets, insertion pages and revised sections to be incorporated into the draft EIS. In such cases, RUS will circulate such changes together with comments on the draft EIS, responses to comments, and other appropriate information, as its final EIS. RUS will not circulate the draft EIS again, although the draft EIS will be provided if requested within thirty (30) days of publication of notice of availability of the final EIS.

(d) In individual situations, upon mutual agreement between RUS and the Borrower, the EIS may be prepared by an independent contractor. If RUS acts as lead agency, the contractor will be chosen by RUS. Under this procedure, the Borrower normally will not be required to submit an Environmental Analysis.

[49 FR 9550, Mar. 13, 1984; 49 FR 10083, Mar. 19, 1984]

§ 1794.55 Timing of agency action.

(a) Where an RUS action requires an EIS, RUS shall prepare a Record of Decision. The Record of Decision will not be prepared, and RUS will not take any action or execute commitments before expiration of the thirty (30) day period starting with either EPA's notice in the FEDERAL REGISTER that the final EIS is available or the Borrower's notices of availability, whichever is later.

(b) For budgetary purposes some financing assistance may be approved conditionally with a stipulation that no funds will be advanced until a Record of Decision has been prepared.

Subpart G—Procedure for Environmental Assessment Proposals Without Scoping

§ 1794.60 General.

The following procedure applies to all actions classified as Environmental Assessment projects in § 1794.33 hereof. Where appropriate to carry out the purposes of NEPA, RUS may require, on a case by case basis, that additional action be taken in connection with preparation of an EA. If at any point in the preparation of an EA, RUS determines that the action will have a significant impact on the environment, the preparation of an EIS will be required and the procedures applicable thereto will be followed.

§ 1794.61 Document requirements.

For those proposals covered by § 1794.33, the Borrower shall submit a BER or its equivalent. The BER may serve as RUS's EA if RUS makes an independent evaluation of the environmental issues and concurs in the BER's scope and content. The BER also may be made an Appendix to RUS's EA to provide information on the proposal and reduce unnecessary paperwork.

§ 1794.62 Notice of availability.

The Borrower shall publish a public notice of availability of the BER.

(a) The Borrower's notice shall:

(1) Provide a brief description of the nature and location of its recommended and reasonable alternatives;

(2) State the availability of the BER for public review;

(3) State how copies of the BER can be obtained and where copies are available for public review, which shall include the Borrower's headquarters, RUS offices in Washington, DC, and other locations as determined by RUS;

(4) Provide the name and address of the person to whom questions and comments should be sent:

(5) Set forth a thirty (30) day time period for review and comment.

(b) The Borrower's notice shall be published after RUS has determined that the BER provides a satisfactory basis for public comment.

[49 FR 9550, Mar. 13, 1984; 49 FR 10083, Mar. 19, 1984]

§ 1794.63 FONSI and notice requirements.

(a) If RUS, after reviewing the EA, finds that the proposal will not have a significant effect on the human environment, RUS shall prepare a FONSI. After the FONSI has been made, RUS shall publish a notice of availability of the EA and FONSI. The Borrower shall have published, in a timely manner, a similar notice.

(b) Both the RUS and Borrower's notice shall:

(1) Provide a brief description of the nature and location of the preferred and reasonable alternatives:

(2) State that an EA and FONSI have been prepared;

(3) State how copies of the EA and FONSI can be obtained, and where copies are available for public review which shall include the Borrower's headquarters, RUS offices in Washington, and other locations as determined by RUS;

(4) Provide the name and address of the person to whom questions and comments should be sent.

(c) RUS shall not permit construction or other activities which would have an environmental effect until it has received, reviewed and accepted an adequate BER and the public notice requirements in paragraphs (a) and (b) of this section have been met.

§ 1794.64 Timing of agency action.

RUS may take its final action on proposals requiring an EA without scoping (§ 1794.33) at any time after publication of the RUS and Borrower notices that a FONSI has been made.

Subpart H—Procedure for Environmental Assessment Proposals With Scoping

§ 1794.70 General.

For those proposals covered by § 1794.34, RUS and the Borrower shall follow the procedures for scoping and the requirements for notices and documents set forth in §§ 1794.50 through 1794.53 of Subpart F, ''Procedure for Proposals Normally Requiring an EIS.''

§ 1794.71 RUS determination.

After the scoping process and receipt of an acceptable Environmental Analysis, RUS shall make a judgment as to whether or not RUS's action will be a major Federal action significantly affecting the quality of the human environment. If a significant effect is evident, RUS shall continue with the procedures in §§ 1794.54 through 1794.55 of Subpart F, ''Procedure for Proposals Normally Requiring an EIS.'' If a significant effect is not evident, RUS shall develop and prepare an EA and FONSI.

§ 1794.72 Notice requirements for a FONSI determination.

If RUS prepares a FONSI for a proposal covered by § 1794.34, RUS and, in a timely manner, the Borrower shall publish notices of availability of the EA and FONSI. The EA and FONSI shall be made available for public review and comment for at least thirty (30) days, and the RUS and Borrower notices shall solicit public comments. Additional RUS and Borrower notice requirements are included in § 1794.63.

§ 1794.73 Timing of agency action for FONSI determination.

RUS may take its final action at any time after expiration of the thirty (30) day period measured from the date of publication of the RUS notice in the FEDERAL REGISTER. Normally RUS shall wait thirty (30) days after publication of the Borrower's notice before taking a final action.

Subpart I—Adoption of Environmental Documents

§1794.80 General.

Where Borrowers participate in projects for which other agencies have already prepared an EIS or EA, RUS will adopt the existing EIS or EA consistent with the provisions of 40 CFR 1506.3.

§1794.81 Adoption as a final EIS.

(a) If RUS acted as a cooperating agency, the lead agency's EIS may be adopted as a final EIS without recirculation if RUS has reviewed the comments received on the final EIS and concluded that comments and suggestions have been adequately considered.

(b) If RUS was not a cooperating agency but determines that another Federal agency's EIS is adequate it will adopt the EIS as its final EIS.

(1) RUS and the Borrower shall publish a notice stating RUS's adoption of the EIS and independent determination of its adequacy. The notices are governed by §§1794.12 (general) and 1794.54(a) (EIS).

(2) If the adopted EIS is generally available, RUS will circulate its written finding that the adopted EIS meets the standards for an adequate EIS. The adopted EIS shall be made available to interested parties upon request.

(3) If the adopted EIS is not generally available, RUS will circulated its written finding that the adopted statement is an adequate EIS, along with either the adopted EIS or a summary thereof in accordance with 40 CFR 1502.19. The adopted EIS shall be circulated in the same manner as a final EIS (see §1794.54(b)).

§1794.82 Adoption as a draft EIS.

Where RUS determines that an existing Federal EIS requires additional information to meet the standards for an adequate statement for a proposed RUS action, RUS may adopt all or a portion of the EIS as a part of its draft EIS. The circulation provisions of §1794.54(b) for draft and final EIS's apply. The general notice provisions (§1794.12) and notice provisions for EIS's (§1794.54(a)) apply.

§1794.83 Adoption of an EA.

RUS may adopt a Federal EIS or EA or a portion thereof as its EA. RUS shall make the EA available and assure that notice is provided in the same manner as if RUS had prepared the EA.

§1794.84 Adoption of environmental materials.

RUS may adopt environmental documents or portions thereof prepared by Federal, state or local agencies or other parties independently of the requirements of NEPA. RUS may adopt such materials into its environmental documents. RUS will circulate the adopted document as a part of its environmental assessment or draft and final EIS in the same manner as if prepared by RUS.

§1794.85 Timing of agency action.

Where RUS has adopted another agency's environmental documents, the timing of the RUS action shall be subject to the same requirements as if RUS had prepared the required EA or EIS.

Subpart J—Supplemental EIS

§1794.90 Circulation and notices.

(a) A supplement to a draft or final EIS shall be prepared, circulated and given notice by RUS and the Borrower in the same manner (exclusive of scoping) as a draft and then final EIS (see §1794.54).

(b) Normally RUS and the Borrower shall have published notices of intent to prepare a supplement to a final EIS in those cases where a Record of Decision has already been issued.

(c) RUS, at its discretion, may issue an information supplement to a final EIS where RUS determines that the purposes of NEPA are furthered by doing so even though such supplement is not required by 40 CFR 1502.9(c)(1). RUS and the Borrower shall publish a notice of availability. The notice requirements shall be the same as for a final EIS indicated in §1794.54(a). The information supplement shall be circulated in the same manner as a final EIS (see §1794.54(b)). RUS shall take no

final action on any proposed modification discussed in the information supplement until thirty (30) days after the RUS notice of availability is published or thirty (30) days after the Borrower's notice is published, whichever occurs later.

§ 1794.91 Timing of agency action.

Timing of RUS's action shall be subject to the same requirements as apply to a typical EIS.

Appendix A

Procedure for Proposals Which Normally Require an EIS

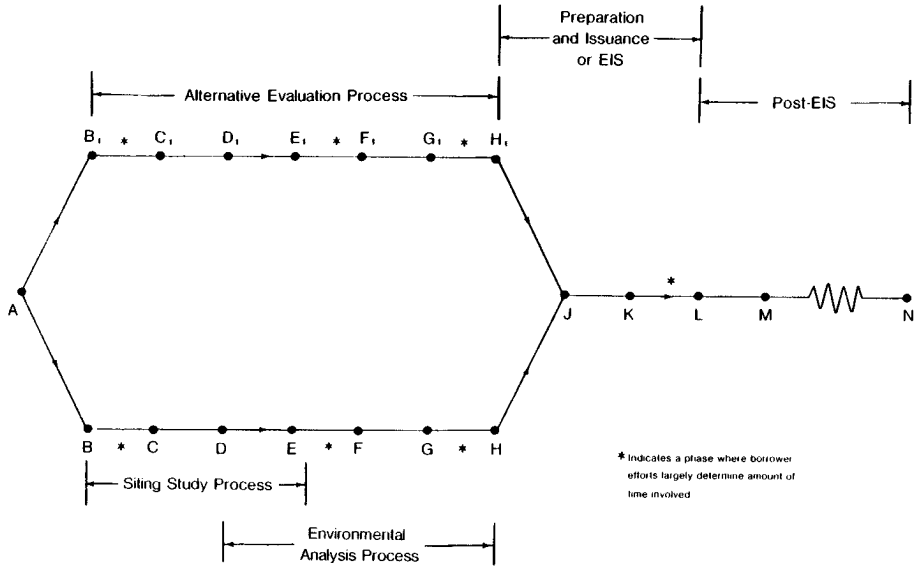

Diagram Legend

◗ On-going activity in the EIS process

B, C, D, Discrete events in the Siting Study and Environmental Analysis path

B_1, C_1, Discrete events in the Alternative Evaluation path

As the diagram illustrates, there will be two separate but interrelated study processes leading to the preparation of the EIS. One process B_1 through H, will examine alternatives to building a generating (or transmission or new mining) facility. The other process, B through H will examine a range of potentially acceptable sites for a generating (or transmission or new mining) facility.

In order to facilitate long-range planning and reduce delays, a Borrower may undertake preliminary evaluations of alternative means of providing power and begin the study of a range of potentially acceptable sites for a generation (or transmission or new mining) facility before demonstrating a need for the proposal. However, the obligation to show a need for the proposal will still remain before RUS financing assistance can be obtained.

Equal spacing between points on the diagram is not meant to suggest equal time intervals. Where two letters are the same (except for subscripts), generally the two indicated events should occur within the same time frame. For BD and B_1 D_1, this is only true where the Borrower initiates site selection at a time when there is a specific need to be filled. For major transmission projects, events occurring with reference to the Macro-Corridor Study are analogous to the generation and mining Siting Study procedures.

The flow diagram is intended to indicate the normal sequence of events although some variance may be acceptable in individual cases if good cause is demonstrated. However, in all instances RUS shall assure that the requirements of the NEPA and CEQ regulations are fulfilled.

Discrete Events

A: The Borrower presents to RUS the underlying needs which form the basis of its proposal. RUS undertakes for electric generation proposals, when necessary, the preparation or update of the power requirements study (PRS) utilizing RUS procedures. For electric generation and transmission and mining proposals, the need for the proposal shall be presented in the draft and final EIS's (or EA, as applicable).

B and B_1: The Borrower consults with RUS on the procedures and general parameters for the Siting Study and on potential alternative ways to meet the need, including guidance on preparing the Alternative Evaluation. Consultation may be initiated even if a specific need has not been identified.

BC: Work is performed on the Siting Study by the Borrower and/or consultant. This includes ''macroanalysis'' in which general criteria, literature search and consultation are used to identify a reasonable range of potentially acceptable sites.

Borrower/consultant contact Soil Conservation Service (SCS), U.S. Environmental Protection Agency (EPA), U.S. Fish and Wildlife Service (FWS), U.S. Army Corps of Engineers (COE), Federal land use agencies and state agencies for early guidance and input.

As soon as practicable during this period, RUS publishes its ''Notice of Intent'' in the FEDERAL REGISTER and the Borrower publishes similar information in local newspapers of general circulation. (See §1794.51(b)).

B_1 C_1: Borrower does research and consultation, contacts other utilities, etc., to determine whether there are reasonable alternatives to a new generating (or transmission or mining facility). The Alternative Evaluation should include discussion, as appropriate, of joint projects, alternate fuels, alternate energy sources, conservation, etc. Alternatives eliminated from detailed study should be identified and reasons given for the elimination. The Borrower should also indicate which alternatives are reasonably available to it if its recommended alternative is not approved.

C and C_1: Borrower submits draft of Siting Study and Alternative Evaluation to RUS for review. RUS reviews each draft for major flaws. If such flaws are not present, RUS submits both the draft Siting Study and Alternative Evaluation to potentially involved Federal and state agencies (including, but not limited to, all agencies invited to the field investigation) for review and comment.

D and D_1: RUS invites other Federal and state agencies to make a field investigation of potentially acceptable siting areas discussed in the draft Siting Study and critique the study methodology, and point out potential problems with these alternative siting areas. The Borrower at this time presents site and nonsite specific alternatives included in the Siting Study and Alternative Evaluation to these agencies for their comments. Participating agencies may critique alternative means of meeting the need and point out potential problems with alternative siting areas. The agencies set up a strategy for conducting the scoping process and tentatively identify the lead and cooperating agencies for the EIS.

DE: Federal agencies are given the opportunity to comment on the potentially acceptable alternatives to point out fatal flaws. During this stage the Borrower may secure land, water or other critical factors for potentially acceptable sites by option or other means (subject to the limitations in §1794.21). If RUS's notice of intent and the Borrower's notice did not give the date and time of the scoping meeting, scoping meeting notices are published now.

E and E_1: Scoping meeting(s) is held to receive input from the public, interested parties, and Federal, state and local officials and agencies. Among the topics open to discussion are reasonable alternatives to meet the need, potentially acceptable sites, participation projects or conservation, significant issues to be addressed in the EIS, and the need for the project.

EF: Borrower submits revised Siting Study (or addenda if appropriate) to RUS for review after revising it to reflect input from scoping meeting(s). RUS consults with cooperating agencies on the scope of the EIS and gives the Borrower guidance on scope of the Environmental Analysis. Borrower prepares the draft Environmental Analysis which includes a fatal flaw study of potentially acceptable sites and a ''microanalysis'' in which detailed field work is conducted on the Borrower's recommended site(s). The Borrower continues consultation with RUS and other interested Federal, state, and local agencies, and the public, and reflects their comments in the Environmental Analysis.

D_1 F_1: Borrower updates and expands, as necessary, the Alternative Evaluation on the basis of comments received from Federal, State and local officials and agencies, input from participants at the scoping meeting(s), the general public and new developments (*e.g.,* negotiations with other electric power utilities), RUS provides guidance to the Borrower during this period based on cooperating agency and public input.

F and F_1: The Borrower submits draft Environmental Analysis to RUS for review and

comment. If the draft Environmental Analysis has no readily apparent critical flaws, RUS distributes copies of the Environmental Analysis to cooperating agencies for review. Borrower submits Alternative Evaluation, which has been updated after the scoping meeting, and also includes new alternatives, if any, which have developed. RUS submits updated Alternative Evaluation to requesting cooperating agencies. The Environmental Analysis may incorporate the Alternative Evaluation leading to a single review document.

FG and F_1 G_1: RUS and cooperating agencies independently evaluate, for accuracy, scope and content, the information submitted to them. RUS collates responses and reconciles them with the Borrower. RUS may begin writing the draft EIS at this point.

H and H_1: RUS Borrower submits, as appropriate, a final revised Environmental Analysis and Alternative Evaluation to RUS.

HJ and H_1 J: RUS independently evaluates the revised documents and verifies the information therein before use in the EIS. During this time, RUS prepares the draft EIS, utilizing the borrower—supplied data, interagency expertise, and other information.

J: RUS issues draft EIS for public review and comment publishing notice of availability in the FEDERAL REGISTER.

K: Public comment period ends on draft EIS. This date may be extended in certain instances.

KL: RUS (and cooperating agencies, as appropriate) review comments received on draft EIS and responds, by modifying alternatives, developing alternatives not previously given sufficient consideration, supplementing, improving or modifying the analyses, etc. A final EIS or supplemental draft EIS is prepared, as appropriate, with cooperating agencies' assistance.

M: Record of decision is issued. RUS will take no final action on any loan guarantee, etc., sooner than 30 days after issuance of the final Federal EIS.

MN: Implementation of mitigation measures is checked, as necessary, by RUS and other Federal, state, and local agencies during construction and operation of the project.

CHAPTER XVIII—RURAL HOUSING SERVICE, RURAL BUSINESS-COOPERATIVE SERVICE, RURAL UTILITIES SERVICE, AND FARM SERVICE AGENCY, DEPARTMENT OF AGRICULTURE

EDITORIAL NOTE: Nomenclature changes to Chapter XVIII appear at 59 FR 66443, Dec. 27, 1994; 61 FR 1109, Jan. 16, 1996; and 61 FR 2899, Jan. 30, 1996.

SUBCHAPTER A—GENERAL REGULATIONS

Part		*Page*
1804	[Reserved]	
1806	Insurance	1288
1807	[Reserved]	
1809	[Reserved]	
1810	Interest rates, terms, conditions, and approval authority	1307

SUBCHAPTER B—LOANS AND GRANTS PRIMARILY FOR REAL ESTATE PURPOSES

1822	Rural housing loans and grants	1308
1823	Association loans and grants—community facilities, development, conservation, utilization	1320

SUBCHAPTERS C–D—[RESERVED]

SUBCHAPTER E—ACCOUNT SERVICING

1863–1866 [Reserved]

SUBCHAPTER F—SECURITY SERVICING AND LIQUIDATIONS

1872 [Reserved]

SUBCHAPTER G—MISCELLANEOUS REGULATIONS

1890–1899 [Reserved]

EDITORIAL NOTE: Chapter XVIII–Farmers Home Administration or its successor agency under Public Law 103–354 is continued in the volumes containing 7 CFR parts 1900 to 1939, 1940 to 1949, 1950 to 1999, and 2000 to End.

SUBCHAPTER A—GENERAL REGULATIONS

PART 1804—[RESERVED]

PART 1806—INSURANCE

Subpart A—Real Property Insurance

Sec.
1806.1 General.
1806.2 Companies and policies.
1808.3 Coverage requirements.
1806.4 Examining and general servicing of insurance.
1806.5 Losses.
1806.6 Failure of borrower to provide insurance.
EXHIBIT A TO SUBPART A—ESCROW AGREEMENT REAL PROPERTY INSURANCE

Subpart B—National Flood Insurance

1806.21 General.
1806.22 Areas of responsibility.
1806.23 Definitions.
1806.24 Eligibility.
1806.25 Conditions.
1806.26 Coverage and premium rates.
1806.27 Acceptable policies and servicing.
1806.28 Borrowers required to escrow.
EXHIBIT A TO SUBPART B TO PART 1806—COVERAGE AND PREMIUM RATES
EXHIBIT B TO SUBPART B TO PART 1806—SERVICING COMPANY

AUTHORITY: 5 U.S.C. 301; 7 U.S.C. 1989; 42 U.S.C. 1480.

Subpart A—Real Property Insurance

AUTHORITY: 7 U.S.C. 1989; 42 U.S.C. 1480; 42 U.S.C. 2942; 5 U.S.C. 301; delegation of authority by the Sec. of Agri., 7 CFR 2.23; delegation of authority by the Asst. Sec. for Rural Development, 7 CFR 2.70; delegations of authority by Dir., OEO 29 FR 14764, 33 FR 9850.

§ 1806.1 General.

(a) *Authority*. This subpart sets forth the policies and procedures regarding insurance requirements on real property which serves as security for a debt under the Farm Credit Programs of the Farm Service Agency (FSA) or the Multi-Family Housing Programs of the Rural Housing Service (RHS). Any references herein to the Farmers Home Administration (FmHA) or its employees are intended to mean FSA or RHS, as applicable, and their employees.

(b) *Borrower to furnish insurance*. The real estate mortgage executed by the borrower provides that he will furnish and continually maintain and pay for insurance on buildings situated or constructed on the property with companies, in amounts, and on terms and conditions satisfactory to the FmHA or its successor agency under Public Law 103–354 until the loan is repaid.

(c) *Borrower's selection of company*. The borrower may select the insurance company provided that the company and insurance policy comply with all the requirements set forth in this Instruction.

(d) *Responsibility*. The County Supervisor is responsible for taking all actions in connection with insurance as may be necessary to protect the security interest of the FmHA or its successor agency under Public Law 103–354. Any unusual situation that may arise with respect to obtaining or servicing insurance should be referred to the State Director. The State Director will refer any questions of a legal nature to the Office of the General Counsel (OGC).

(e) *Use of Form FmHA or its successor agency under Public Law 103–354 426–1, ''Valuations of Buildings.''* The minimum insurance required will be indicated in the appraisal report by the employee who makes the appraisal of property that includes insurable buildings. In the case where no real estate appraisal is required or the appraisal report does not indicate the minimum insurance coverage, Form FmHA or its successor agency under Public Law 103–354 426–1 will be prepared by the County Supervisor. Reevaluation of the buildings will not be done on appraisal reports; however, when new buildings are constructed or values increase or decrease materially and reevaluation is necessary to properly reflect the buildings' security interest of the FmHA or its successor agency under Public Law 103–354, the County Supervisor will prepare or revise Form FmHA or its successor agency under Public Law 103–354 426–1 as appropriate. Changes made on an existing Form FmHA or its successor agency under Public Law 103–354

426–1 will be dated and initialed. The reason for any deletion will be noted on the Form.

[41 FR 34571, Aug. 16, 1976, as amended at 61 FR 59777, Nov. 22, 1996]

§1806.2 Companies and policies.

Property insurance policies or other evidence of insurance will be accepted from borrowers when the requirements outlined herein are complied with fully.

(a) *Companies.* It is desirable that companies be licensed to do business in the particular State or other jurisdiction where the property is located, or that they be otherwise authorized by law to transact business within such State or other jurisdiction (hereinafter called ''State''). If the required insurance is not available locally at comparable rates from an insurance company licensed or otherwise authorized to do business in the State, insurance may be accepted from another company if (1) the OGC advises that policies issued by such company will not be rendered unenforceable by virtue of the company's failure to be licensed or otherwise authorized to transact business in the State and that the company is a legal entity which may be sued in the State where the insured property is located, and (2) the State Director determines that the company is reputable and financially sound. In making the above determinations, the State Director will consider all relevant available information such as that which may be obtained from financial statements, Best's Insurance Reports, State insurance authorities, and other lending institutions.

(b) *Insurance policies*—(1) *Standard policies.* If a standard fire insurance policy has been adopted for the State, it should be used unless State statutes exempt the company from the regulations requiring its use. The standard policy is one containing substantially the same standard provisions adopted or recommended by legislative action or by order of the supervisory insurance authorities of the State in which the security is located.

(2) *Other policies.* To be acceptable, any other insurance policies must conform to the requirements of this Instruction.

(i) ''Homeowner's'' policies, ''All Physical Loss'' policies, ''Broad Form'' policies, and other such all-inclusive policies are acceptable if they otherwise meet the requirements of this Instruction.

(ii) A builder's risk policy naming the borrower as the insured or a builder's risk endorsement for a policy issued to the borrower may be accepted during the period a building is under construction if the policy otherwise meets the requirements of this Instruction. If such a policy or endorsement does not automatically convert to full coverage when the building is completed, acceptable insurance must be obtained simultaneously with the expiration of the builder's isk provisions of the policy.

(iii) A builder's risk insurance policy issued to a contractor only may not be substituted for the property insurance, the borrower is required to provide.

(iv) Borrowers eligible for insurance under the National Flood Insurance Act of 1968, as amended by the Flood Disaster Act of 1973, will be serviced in accordance with subpart B of this part.

(3) *State instructions.* If the State Director and the OGC consider it advisable, a State Instruction may be issued to help County Supervisors identify standard insurance policies adopted for the State. The Instruction should also furnish a guide to assist in identifying other acceptable insurance policy forms that are commonly used by insurance companies in the State, recognizing that such information is not all inclusive.

(4) *Binders.* Whenever there is a justifiable reason for not issuing a policy or endorsement, as required, a written binder will be acceptable for a period not to exceed 60 days from the effective date of the insurance. The written binder must have attached thereto the approved form of mortgage clause. Such a binder will be submitted to the County Supervisor in lieu of an insurance policy or endorsement and the insurance policy or endorsement will be submitted on or before the expiration date of the binder. The State Director, with the advice of the OGC and subject

to prior approval of the National Office, may issue a State Instruction authorizing such binders to be accepted for periods longer than 60 days.

(5) *Submission of Policies.* (i) For Farmer Program (FP) loans secured by a first lien, the original policy or declaration page must be delivered to the County Supervisor. The original policy or declaration page will be returned to the borrower after one year using Form FmHA or its successor agency under Public Law 103–354 426–4, ''Notice of Expiration of Insurance.''

(ii) For Single Family Housing (SFH) loans secured by a first lien, the original policy or declaration page must be delivered to the closing agent.

(iii) In cases where an FP or SFH loan is secured by other than a first lien and the mortgage clauses include the names of the prior mortgagees, a certificate of insurance, copy of the policy, or other evidence of insurance is acceptable.

(iv) The County Supervisor will process an advance to pay for insurance only in strict compliance with provisions of § 1806.6 of this subpart.

(6) *Master sets.* If the master sets meet all of the requirements of this Instruction they may be accepted in lieu of an original policy for each FmHA or its successor agency under Public Law 103–354 borrower.

(i) One complete master set of the different insurance forms for policies issued by the insurance company must be on file in each County Office where the company insures property of FmHA or its successor agency under Public Law 103–354 borrowers.

(ii) The ''Declaration Page'' furnished by the insurance company for each borrower insured, in lieu of a complete policy, will be filed in the borrower's case folder. When a ''Declaration Page'' in the form of a computer printout is used by an insurance company an endorsement on every policy issued by that company or a letter from that company will be obtained and attached to the printout. However, a letter signed by an authorized official of the company and addressed to the State Director may cover all policies issued by that company in the State. Any such endorsements or letters should clearly state that the company considers the printout to be an original ''Declaration Page''. Such endorsements or letters are not necessary if the printout itself clearly states that it is an original ''Declaration Page.''

(7) *Name and location.* The policy should contain names of all the borrowers who are owners of the property being insured, and it will be returned for correction if it does not do so. The location of the property should be so described in the policy that the property can easily be identified. The complete legal description of the property by metes and bounds is not required. Any deviation from the requirements of this paragraph must first be cleared with the National Office.

(8) *Loss or damage covered.* Buildings must be insured against loss or damage by fire, lightning, windstorm, hail, explosion, riot, civil commotion, aircraft, vehicles, and smoke.

(9) *Effective date of insurance.* If there are insurable buildings located on the property, the borrower will arrange with his agent or company to have adequate insurance in force at the time the loan, assumption, or credit sale is closed so that the policy will properly insure the borrower and the mortgagees. When new buildings are erected or major improvements are made to existing buildings, such insurance will be made effective as of the date materials are delivered to the property. The County Supervisor will make no payments from loan funds for labor or materials until the borrower has furnished adequate insurance to protect the interest of the FmHA or its successor agency under Public Law 103–354 in the buildings being erected or improved.

(10) *Term.* The borrower will be required to furnish insurance for a term of at least one year with evidence that a full year's premium is paid. The term ''premium'' as used herein includes any assessments which may be charged to the borrower. If the assessments are of the type imposed only after a loss occurs involving property insured by the insurance company, then the borrower must present evidence (such as a letter from the company) that he currently does not owe any such assessments. The borrower may receive a discount for insuring for a longer period such as three years or five years and with an

annual premium. If the insurance contains an automatic renewal clause, its provision should be substantially the following to be acceptable to FmHA or its successor agency under Public Law 103–354:

This policy will be automatically extended for successive terms at expiration of the original term and of each extension thereof, upon payment of renewal premiums. It is a condition of this policy that if the policy expires or is canceled for nonpayment of premium, or for any other reason, the mortgagee will be given 10 days notice.

(11) *Mortgage clause.* The standard mortgage clause adopted by the State must be attached to or printed in the policy, or Form FmHA or its successor agency under Public Law 103–354 426–2, ''Property Insurance Mortgage Clause (Without Contribution),'' must be attached to or the provisions thereof printed in the policy. A letter signed by an authorized official of an insurance company to the State Director, stating that all insurance policies the company issues in the State and in which the FmHA or its successor agency under Public Law 103–354 has a mortgage interest incorporates all of the provisions of Form FmHA or its successor agency under Public Law 103–354 426–2 may be accepted in lieu of attaching Form FmHA or its successor agency under Public Law 103–354 426–2 to each policy. If such a blanket letter is used, the FmHA or its successor agency under Public Law 103–354 will be named in the loss payable clause and a State Instruction will be issued, after prior approval is obtained from the National Office, authorizing the use of such method.

(i) If the use of a mortgage clause, other than the standard mortgage clause (without contribution), has been made mandatory by State laws or insurance regulations, a State Instruction will be issued, after prior approval is obtained from the National Office, authorizing the use of such a form.

(ii) When an approved mortgage clause is printed in the policy a ''Loss Payable Clause'' is acceptable provided the FmHA or its successor agency under Public Law 103–354, as mortgagee, would receive payment in case of loss even though the company would not be liable to the borrower. A ''Loss Payable Clause'' which contains the statement that the mortgagee is ''subject to all terms and conditions of the policy'' is not acceptable.

(iii) Whenever a new mortgage clause including the interest of the FmHA or its successor agency under Public Law 103–354 is issued after the policy has been in force, the new mortgage clause must be signed by an authorized agent or officer of the company that issued the policy. Form FmHA or its successor agency under Public Law 103–354 426–6, ''Transmittal of Property Insurance Mortgage Clause,'' may be used to transmit the mortgage clause to the insurance official.

(iv) The FmHA or its successor agency under Public Law 103–354 and all other mortgagees whose interests are insured by the policy will be shown either in the mortgage clause or in the ''Declaration Page'' in the order of priority of their mortgages.

(A) ''United States of America (Farmers Home Administration or its successor agency under Public Law 103–354)'' will be named in the mortgage clause for direct and insured loan mortgages naming FmHA or its successor agency under Public Law 103–354 as mortgagee, whether in its own right or as trustee under a 2(f) or other agreement with a State Rural Rehabilitation Corporation.

(B) ''United States of America (Farmers Home Administration or its successor agency under Public Law 103–354), as first mortgagee or as statutory agent and insurer of such mortgagee,'' will be named in the mortgage clause for insured FO mortgages naming the lender as mortgagee, whether the mortgage is held by the original or a subsequent lender or by the insurance fund or by FmHA or its successor agency under Public Law 103–354 under a trust agreement or declaration of trust.

(C) If the designation is not identical to that set forth in paragraphs (b)(11)(iv)(A) or (B) of this section, whichever is applicable, it will be sufficient if the mortgagee is readily identifiable as the Farmers Home Administration or its successor agency under Public Law 103–354.

(c) *Evidence of premium payment.* (1) When Form FmHA or its successor

agency under Public Law 103–354 426–2 is attached to or the provisions thereof are printed in the policy, or a blanket letter from an insurance company incorporating the provisions of Form FmHA or its successor agency under Public Law 103–354 426–2 in all policies in which the FmHA or its successor agency under Public Law 103–354 has a mortgagee interest in effect, in accordance with paragraph (b)(11) of this section, no evidence of premium or assessment payment is required except for the first year of the loan. When a subsequent FP or section 502 RH loan is made to build, buy or rehabilitate essential buildings an endorsement to the existing policy including coverage for the property improved will be sufficient.

(2) [Reserved]

(d) *Policy restrictions.* (1) Any insurance on essential buildings as defined in § 1806.3 having restrictions which limit the amount of collectable insurance must meet the FmHA or its successor agency under Public Law 103–354 requirements set forth below (except for the clause described in paragraph (d)(1)(iv) of this section which is never acceptable); otherwise, such restrictions must be eliminated or modified to afford the required protection.

(i) *Coinsurance clause.* This clause generally provides that in consideration of a reduced rate, the borrower agrees to maintain insurance on his buildings up to a specified percentage (usually 80 percent) of their value and that the company will not be liable for a greater proportion of any partial loss than the amount of insurance bears to the specified percentage of either the undepreciated replacement value or the depreciated replacement value or the depreciated replacement value (actual cash value) of the buildings at the time of the loss. When the buildings are insured for the specified percentage of their value, the company, in the event of a partial loss, will be liable for the full amount of the loss not to exceed the amount of insurance. A coinsurance clause can be accepted only where the amount of insurance is at least equal to the specified percentage of either the undepreciated replacement value or the depreciated replacement value (actual cash value). For example, an 80 percent coinsurance clause can be accepted only where the amount of insurance on each insured building is at least equal to 80 percent of the appropriate replacement value of the insured building.

(ii) *Three-fourths' value clause.* This clause provides that the liability of the company shall be limited to three-fourths of the depreciated replacement value of the buildings covered at the time of the loss, not to exceed the amount of insurance. This clause may be accepted if the unpaid balance of the loan is not greater than three-fourths of the depreciated replacement value of the building and the amount of insurance is at least equal to the unpaid balance of the loan and any prior liens and no building is insured for more than three-fourths of its depreciated replacement value.

(iii) *Loss deductible clause.* (A) For all loans other than RRH, RCH, and LH organizations this clause generally provides that loss to each building to the extent of the limitation is not recoverable. The company is liable only for loss to each building in excess of such limitation stated in the clause. This clause may be accepted where the limitation does not exceed $150, or one percent of the insurance coverage whichever is greater. In no case, however, may the limitation on any one building exceed $500.00.

(B) For RRH, RCH, and LH organization loans this clause generally provides that loss to each project to the extent of the limitation is not recoverable. The company is liable only for loss to each project in excess of such limitation stated in the clause. This clause may be accepted where the limitation does not exceed the option shown below that is chosen by the borrower and agreed to by the Loan Approving Official and properly annotated in the borrower file. The borrower and FmHA or its successor agency under Public Law 103–354 Official should consider the economic impact to the project when selecting the appropriate option.

(*1*) Option 1—Up to one-fourth of one percent (0.0025) of the insurable value. Maximum deductible $5,000.

(*2*) Option 2—Up to a maximum deductible of $500 on any project with an insurable value not exceeding $200,000.

(*3*) Option 3—Option 1 may be chosen and increased above the maximum deductible by an amount equivalent to funds specifically escrowed in the project replacement reserve account as an offset to the increased deductible.

(*4*) Option 4—Option 2 may be chosen and increased above the maximum deductible by an amount equivalent to funds specifically escrowed in the project replacement reserve account as an offset to the increased deductible.

(*5*) The funds used to increase the deductible in Option 3 or Option 4 may be from project funds if it does not create an unsecure financial situation for the project. Also, non-project funds may be used for Option 3 or 4 and then repaid by withdrawal from the project at the rate of 75 percent of the annual insurance premium savings earned by the amount of escrow deposit, up to the amount deposited.

(*6*) The funds escrowed to increase the authorized deductible will be placed in the project reserve account as an increased amount in and above the amount required by the Loan Agreement/Resolution and so annotated in the borrower's accounting system.

(iv) *Three-fourths' loss clause.* This clause provides that the company will not pay more than three-fourths of any loss, nor more than three-fourths of the amount of insurance in force. This clause is never acceptable and must be eliminated.

(v) *Deferred loss payable clause.* This clause provides that, if the amount payable under the policy for any loss to any building insured shall be in excess of a specified portion, (usually 60 percent) of the amount of insurance on such building, the company will withhold from its initial loss payment any sum in excess of the specified portion of the amount of insurance on such building. If the building sustaining such loss is repaired or replaced within six months from the date of the fire and at or within 300 feet of the original location, as described in the policy, the company upon receipt of evidence to that effect from the insured will pay the full balance withheld from the initial payment, provided the amount expended in repairing or replacing the building damaged or destroyed will equal or exceed the amount of loss as determined under the terms of the policy. Failure to repair or replace any insured building within the time and manner provided will constitute acceptance of the initial payment as full and final settlement under the policy with respect to the loss. This clause may be accepted if the amount of insurance is for the full depreciated replacement value (actual cash value) of the building and the unpaid balance of the loan and any prior lien(s) is not greater than the initial loss payment made by the company.

(vi) *Construction specifications and use conditions.* If the insurance policy contains clauses which specify certain standards of construction or prescribes certain uses of the property for the insurance to be valid, the policy is acceptable only if the property meets such specifications or conditions at the time of acceptance. For example, if the policy provides that the chimney be constructed of a certain type of material, the County Supervisor should be assured that the required material has been used, or if the policy provides that farming operations are not carried out on the premises he should be assured that this condition is met.

(2) Policies generally will not be accepted if, under the terms of the policies or local laws, contributions or assessments may be made against the FmHA or its successor agency under Public Law 103–354. However, policies which impose assessments on the borrower may be accepted only if the FmHA or its successor agency under Public Law 103–354 mortgage will be recorded prior to any failure of the borrower to pay any such assessments. Policies also will not be accepted if, by their terms or other conditions, loss payments are contingent upon collective action by the Board of Directors, or the stockholders, or the members.

(e) *Buildings on leaseholds.* The policy will indicate that the insured is the lessee or tenant and not the owner of the buildings securing the FmHA or its successor agency under Public Law 103–354 loan; or, if he is the owner of the building on the leased land, the policy will indicate that the insured is the

owner of the building, but not of the land. State Directors, with the advice of the OGC will issue State Instructions to meet any other special requirements needed to conform with the insurance requirements of the State to enable leaseholders to obtain property insurance for buildings which are security for FmHA or its successor agency under Public Law 103–354 loans.

(7 U.S.C. 1989; 42 U.S.C. 1480; 40 U.S.C. 442; 42 U.S.C. 1480; 42 U.S.C. 2942; 5 U.S.C. 301; Sec. 10 Pub. L. 93–357, 88 Stat. 392; delegation of authority by the Secretary of Agriculture, 7 CFR 2.23; delegation of authority by the Assistant Secretary for Rural Development, 7 CFR 2.70; delegations of authority by Director, OEO, 29 FR 14764, 33 FR 9850)

[41 FR 34571, Aug. 16, 1976, as amended at 41 FR 49990, Nov. 12, 1976; 42 FR 33262, June 30, 1977; 43 FR 56013, Nov. 30, 1978; 44 FR 45115, Aug. 1, 1979; 51 FR 17921, May 16, 1986; 54 FR 35869, Aug. 30, 1989; 56 FR 6945, Feb. 21, 1991]

§ 1806.3 Coverage requirements.

The County Supervisor should encourage the borrower for his own protection to insure for their depreciated replacement value (actual cash value) all essential buildings. Essential buildings include the dwelling and any other buildings that are necessary for the operation of the property or that provide income to assure orderly repayment of the loan. If insurance is for less than the depreciated replacement value of all essential buildings, the County Supervisor will see that the coverage is obtained on one or more of the most essential buildings. The minimum amount of coverage will be furnished as prescribed below:

(a) *Loans secured by a first lien.* (1) When the unpaid balance of the FmHA or its successor agency under Public Law 103–354 loan secured by a first lien is equal to or greater than the depreciated replacement value of the essential buildings, or the cost of adequate essential buildings which can be constructed for amounts less than the depreciated replacement value of the existing buildings, the essential buildings will be insured, to the nearest multiple of insurance that is available, for the lesser of (i) their depreciated replacement value, or (ii) the cost of constructing adequate essential buildings. For example, if insurance is available in only multiples of $1,000, the minimum insurance required on an essential building valued at $6,600 would be $7,000, and that required on an essential building valued at $6,400 would be $6,000.

(2) When the unpaid balance of the loan is less than the sum of the depreciated replacement value of the essential buildings to be insured, the total amount of insurance must be at least equal to the lesser of (i) the unpaid balance of the loan, or (ii) the cost of adequate essential buildings which can be constructed for amounts less than the depreciated replacement value of the existing buildings to be insured.

(3) When, by the use of loan funds or otherwise, buildings are erected or substantial improvements are made to essential buildings, the amount of insurance will be adjusted in accordance with paragraphs (a)(1) or (2) of this section, whichever is applicable.

(b) *Loans secured by other than first liens.* The amount of insurance on buildings in the case of FmHA or its successor agency under Public Law 103–354 loans secured by other than a first lien will be the same as required in paragraph (a) of this section, with the understanding that the unpaid balance of the loan will be deemed for this purpose to be the amount of the total real estate mortgage indebtedness owed all prior mortgagees named in the mortgage clause, plus the debt to the FmHA or its successor agency under Public Law 103–354 which is secured by real estate mortgage.

(c) *Exception of buildings from insurance.* (1) Insurance will not be required on a building:

(i) That is not essential.

(ii) In such a state of disrepair that the cost of insurance would be prohibitive.

(iii) Which has a depreciated replacement value of $2,500 or less.

(iv) Which is being or has been repaired with a section 504 loan of $7,500 or less. Families receiving section 504 loans should be encouraged but not required to carry insurance on their home.

(v) On LH security property which was not built or repaired with FmHA or its successor agency under Public Law 103–354 loan funds provided that the State Director determines that the

land and other structures adequately secure the FmHA or its successor agency under Public Law 103–354 loan and any prior liens.

(vi) On which the hazards are so slight because of the character and construction of the building, or the cost of the insurance is so high in comparison with the value of the building that, according to common standards of judgment, it should not be insured, including but not limited to windmills, silos, and fire-cured tobacco barns.

(vii) In cases where the unpaid balance of the FmHA or its successor agency under Public Law 103–354 loans and any prior liens have been reduced to $2,500 or less, property insurance need not be required if the borrower wants to discontinue it, provided the County Supervisor determines that the value of the land security itself is sufficient to protect the FmHA or its successor agency under Public Law 103–354 in its collection of the amount of the outstanding indebtedness.

(viii) If insurance for windstorm and hail to meet all FmHA or its successor agency under Public Law 103–354 requirements is not available in a hurricane area, the County Supervisor may accept from the borrower or applicant the windstorm and hail insurance policy that most nearly conforms to FmHA or its successor agency under Public Law 103–354 requirements. If such an exception is made, the situation should be fully documented in the borrower's case file. However, if the best insurance policy a borrower or applicant can obtain at the time he receives a loan contains a loss deductible clause for windstorm and hail damage exceeding $250 or 10 percent of the actual cash value of the buildings, whichever amount is greater, the insurance policy, with an explanation of the reasons why more adequate insurance is not available will be submitted to the State Office for prior approval.

(2) [Reserved]

[41 FR 34571, Aug. 16, 1976, as amended at 56 FR 6945, Feb. 21, 1991]

§1806.4 Examining and general servicing of insurance.

(a) *Examination by county office of policies, endorsements, binders, and other evidence of insurance.* Upon receipt in the County Office of a policy, endorsement, binder, or other evidence of insurance, submitted by a borrower, it will be examined promptly for compliance with the requirements of this Instruction. If the evidence of insurance is found to be acceptable, it will be placed in the borrower's case folder.

(1) *Unacceptable policies.* (i) When the borrower furnishes any policy or other evidence of insurance which does not meet the requirements of this Instruction such policy or other evidence of insurance will be returned to the borrower with the reasons why it is not acceptable.

(ii) If the borrower does not furnish acceptable insurance by the date the previous policy expired or was canceled, the County Supervisor will proceed as provided in §1806.6.

(2) *Expiration Records and Notices.* After the insurance has been accepted, the expiration date will be inserted on Form FmHA or its successor agency under Public Law 103–354 1905–1, ''Management System Card—Individual,'' or Form FmHA or its successor agency under Public Law 103–354 1905–5, ''Management System Card—Individual (Rural Housing Only),'' or Form FmHA or its successor agency under Public Law 103–354 1905–10, ''Management System Card—Association or Organization,'' or Form 1905–12, ''Monthly Expirations,'' as provided in FmHA or its successor agency under Public Law 103–354 Instruction 1905–A for servicing the renewal of insurance.

(i) In cases other than those involving FP or section 502 RH borrowers, the County Supervisor will notify the borrower of the expiration of his insurance at least 30 days in advance of such expiration unless he has received written evidence that the insurance has been renewed.

(ii) FP and Section 502 RH borrowers will be informed during the tenth month after the date of loan closing of their responsibility to carry insurance. Form FmHA or its successor agency under Public Law 103–354 426–4 will be sent to these borrowers, regardless of whether there is evidence that the insurance has been renewed. Thereafter, the County Supervisor will not be required to further determine whether

the borrower has adequately maintained insurance; however, if a further notice of expiration is received in the County Office, the County Supervisor will again notify the borrower by using Form FmHA or its successor agency under Public Law 103–354 426–4 of his responsibility.

(3) *Release of mortgage interest.* When the borrower's loan has been paid in full and the satisfaction or release of the mortgage has been executed, the County Supervisor or his delegate will execute the following Release of Mortgage Interest on the mortgage clause attached to the policy or other evidence of insurance and transmit it with the policy or other evidence of insurance, the paid-in-full note, and the satisfaction to the borrower:

It is understood and agreed that the interest of the United States of America in the property insured hereunder ceased as of (Date of Final Payment), and that the Government shall have no interest in any loss or damage to such property occurring thereafter.

(4) *Lost or misplaced policies.* When an unexpired insurance policy or other evidence of insurance is lost or misplaced, it will be necessary to obtain a replacement policy or other evidence of insurance. The County Supervisor is authorized to sign a Lost Policy Receipt on behalf of the FmHA or its successor agency under Public Law 103–354. For FP and section 502 RH loans, this paragraph applies only during the period the policy is retained in the County Office.

(5) *Disposition of expired and canceled policies.* An expired or canceled policy or other evidence of insurance will be returned to the borrower, unless there is a loss settlement pending.

(b) *Special servicing of insurance.* (1) *Vacancy or unoccupancy—tenant occupancy—increased hazard.* If the County Supervisor has knowledge that insured property is vacant or unoccupied or that the ownership or occupancy has changed from owner to tenant, or that the hazards otherwise are increased, he will examine the policy to determine whether the policy permits such conditions. Unless the insurance permits such conditions, the County Supervisor will immediately notify the company or agent in writing. In any case where there is an additional premium due because of vacancy, unoccupancy, tenant occupancy, or other increased hazard, and upon demand to FmHA or its successor agency under Public Law 103–354 from the company or agent because the borrower cannot, or will not, pay the additional premium, it may be paid in accordance with FmHA or its successor agency under Public Law 103–354 Instruction 2024–A, to the company or agent. For FP and section 502 RH borrowers, property insurance will not be obtained except in cases where an unusual and severe hazard exists and insurance is necessary to protect the interests of the Government.

(2) *Transfer of property.* (i) When a borrower or transferee requests the consent of FmHA or its successor agency under Public Law 103–354 to a transfer of the security property which already has been made, or when the County Supervisor learns that any such transfer has been made, he will immediately inform the transferee that the mortgage requires the owner to provide and maintain adequate insurance acceptable to, and with loss payable to, FmHA or its successor agency under Public Law 103–354 as mortgagee. The transferee may obtain a new insurance policy or the transferor may have the insurance company or agent issue an endorsement to the current insurance policy changing the name of the assured to that of the transferee. If a new insurance policy is obtained, the old policy or other evidence of insurance will be returned to the transferor unless there is an unsettled loss. If there is an unsettled loss, the policy or other evidence of insurance will not be returned until the claim has been settled. The County Supervisor, with the concurrence of the State Director and the OGC, will notify the borrower and transferee that acceptance of the new policy or endorsement will not constitute consent by the Government to the transfer even though the Government is protected by a loss payable clause in such an insurance policy.

(ii) In a transfer with assumption, insurance will be required in the same amount and according to the same provisions as for an initial loan of the same type.

(3) *Voluntary conveyance of property to the Government and foreclosure.* Insurance will not be carried on buildings which the Government has acquired. After a foreclosure sale has been held, or after a deed of conveyance to the Government in lieu of foreclosure has been filed for record, insurance will not be maintained by the Government (whether or not subject to redemption).

[41 FR 34571, Aug. 16, 1976, as amended at 42 FR 33262, June 30, 1977; 50 FR 39638, Sept. 30, 1985; 54 FR 35869, Aug. 30, 1989; 57 FR 36590, Aug. 14, 1992]

§ 1806.5 Losses.

(a) *Protecting property*. It is the responsibility of the borrower to immediately notify the County Supervisor and insurance company or agent of any loss or damage to insured property and collect the amount of the loss. When the County Supervisor learns of a loss to property which secures an FmHA or its successor agency under Public Law 103–354 loan, he will:

(1) Check the borrower's casefile for an insurance policy or other evidence of insurance. When a policy or other evidence of insurance has not been retained by the FmHA or its successor agency under Public Law 103–354, such as for FP and section 502 RH borrowers, the County Supervisor will determine whether the property was insured and whether FmHA or its successor agency under Public Law 103–354 was named as mortgagee in the insurance policy.

(2) Determine that the borrower has taken such steps as are necessary to protect the interest of the FmHA or its successor agency under Public Law 103–354 in the security property against further damage. When serious problems arise with respect to protecting the property from further damage, the borrower cannot or will not arrange adequate protection for the property, or when legal action appears to be necessary, the County Supervisor will arrange for emergency protection and immediately refer the case with complete information to the State Director.

(b) *Loss covered by insurance.* (1) If the FmHA or its successor agency under Public Law 103–354 is listed as mortgagee in the insurance policy, the County Supervisor will collect the amount of the loss and may consent to the borrower using funds to repair or replace damaged or destroyed property or to apply loss proceeds to his loan account or to any prior liens that might exist in the order of their priority.

(2) If the FmHA or its successor agency under Public Law 103–354 is not listed as mortgagee in the insurance policy, the County Supervisor will contact the borrower to determine whether he has received the loss proceeds. If the borrower has received the loss proceeds but not yet paid for improvements to repair or replace the property, or has not received the loss proceeds the County Supervisor will:

(i) Notify the insurance company in writing of the FmHA or its successor agency under Public Law 103–354's interest in the security property and request that the loss proceeds be made payable jointly to the FmHA or its successor agency under Public Law 103–354 and the borrower.

(ii) Inform the borrower of his responsibility for repairing or replacing the damaged or destroyed property or for authorized disposition of the loss proceeds as outlined in paragraph (b)(1) of this section.

(c) *Loss drafts—when loan is secured by a first mortgage.* (1) A loss draft which in the opinion of the County Supervisor represents a satisfactory adjustment of the loss will be endorsed immediately without recourse and deposited in a supervised bank account to be used in repairing or replacing the damaged building, except:

(i) Where the amount of the loss is $1,000 or less and the borrower will use the funds for repairing or replacing an essential building, the loss draft may be endorsed without recourse and given to the borrower upon satisfactory proof that the repairs or replacements have been made, or upon satisfactory assurance that the work will be performed.

(ii) When (A) the essential buildings are not to be repaired or replaced and other suitable buildings are not to be erected, or (B) a balance remains after all repairs, replacements, and other authorized disbursements have been made, such insurance funds will be applied on prior liens or as an extra payment to the borrower's loan accounts secured by the real estate or disposed

of in accordance with the general principles applicable to the use of proceeds from the sale of a part of the security contained in applicable security servicing regulations for the type loan involved.

(iii) An insurance payment for loss or damage to a nonessential building the borrower voluntarily insured will be (A) applied on prior liens, or to current delinquencies to FmHA or its successor agency under Public Law 103–354 or as an extra payment on the borrower's loan accounts secured by real estate, (B) disposed of as authorized by the State Director in accordance with the general principles applicable to the use of proceeds from the sale of a part of the security contained in applicable security servicing regulations for the type loan involved, or (C) used for other purposes as authorized by the State Director if the loan is adequately secured and the loan account is current.

(iv) When the indebtedness secured by the insured property has been paid in full or the draft is in payment for loss of property on which the FmHA or its successor agency under Public Law 103–354 has no claim, a loss draft which includes the FmHA or its successor agency under Public Law 103–354 as a joint payee may be endorsed without recourse and delivered to the borrower.

(d) *Loss drafts—When loan is secured by other than first mortgage.* (1) When the loss draft does not include the interest of a prior mortgagee, it will be processed as provided in paragraph (c) of this section.

(2) When the loss draft includes the interest of a prior mortgagee, the County Supervisor is authorized to endorse and process the draft as follows:

(i) When the prior mortgagee will permit the use of such loss funds to repair or replace the damaged building, the draft may be endorsed without recourse upon satisfactory proof that the repairs or replacements have been made or upon satisfactory assurance that the work will be performed.

(ii) When the amount of the draft does not exceed the amount of the indebtedness then secured by the prior mortgage as stated in writing by the holder of the prior mortgage, and the holder of the prior mortgage has agreed in a written statement to the County Supervisor that he will apply such funds as a payment on the borrower's prior mortgage indebtedness, the draft may be endorsed without recourse.

(iii) When the amount of the draft exceeds the amount of the indebtedness then secured by the prior mortgage, as stated in writing by the holder, and he has agreed in writing to pay such indebtedness from the loss funds, the draft will be endorsed without recourse only after all parties named as payees in the draft have signed an agreement to deliver the draft ''in escrow'' to a bank acceptable to the named parties. The agreement will specify the manner in which the funds will be disbursed by the bank, as escrow agent, to the several mortgagees named in the draft. After the loss funds have been collected by the bank, it will issue cashier's checks in the manner prescribed in the escrow agreement (see exhibit A for suggested form). If this procedure is found to be impractical in an individual instance, the State Director may authorize an alternative method for disbursing the loss funds to protect the Government's financial interest.

(iv) Drafts which have been endorsed by all other payees will be endorsed immediately without recourse. Such drafts or other loss funds will be processed in accordance with the methods described in paragraph (c) of this section.

(e) *Servicing insurance losses under special circumstances*—(1) *Foreclosures and voluntary conveyances.* Losses on properties in process of foreclosure or voluntary conveyance will be handled with the advice of the OGC. If the necessary cooperation of the borrower cannot be obtained, the State Director, with the advice of the OGC, will determine the proper action to be taken. To the extent feasible from a legal and practical standpoint, all loss payments should be received for a damaged or destroyed building and applied on the borrower's real estate indebtedness before title to the property is taken by the Government through foreclosure sale, voluntary conveyance, or otherwise, unless absolute assignment has been made by the borrower to the Government of all loss funds due from the insurance company.

(2) *Subrogation agreements.* When a company claims nonliability to the borrower and subrogation to the rights of the FmHA or its successor agency under Public Law 103–354, the County Supervisor will forward a full report of the facts in the case to the State Director. The State Director will upon advice from OGC, instruct the County Supervisor regarding further action to be taken.

(f) *Repairs and replacements.* When any loss payments have been deposited in a supervised bank account, all repairs and replacements done by or under the direction of the borrower, or by contract, will be planned, performed, inspected, and paid for in the same manner as improvements financed with loan funds.

(g) *Completing adjustment.* The borrower must complete the adjustment of the loss with the company or its authorized representatives. The County Supervisor, upon request of the borrower may consult with the borrower regarding the loss adjustment, but will not enter into negotiations with insurance adjusters or company representatives relative to the adjustment or settlement of losses on borrower property, or make any commitments, or sign any forms in connection with the adjustment of the loss. The FmHA or its successor agency under Public Law 103–354 will not waive any rights which it may have against the company except when the borrower's account or the FmHA or its successor agency under Public Law 103–354 claim has been paid-in-full.

(1) The County Supervisor will maintain a proper followup on all losses until satisfactory settlement has been made by the company.

(2) Where the County Supervisor has evidence that the adjustment agreed to by the borrower is significantly less than the amount of damage to which the borrower is entitled under the terms of the policy, the loss draft accompanied by a report will be sent to the State Director so that he may reopen the adjustment, if he considers it is in the interest of the FmHA or its successor agency under Public Law 103–354 to do so.

(3) When it appears evident that the amount of the loss is $1,000 or less, the County Supervisor may rely on estimates of contractors, building supply firms, reliable carpenters, or other evidence rather than personal inspection in determining whether the adjustment is equitable and the Government's interest is protected.

(h) *Reinstatement after loss.* In cases where insurance in the amount of the loss is not reinstated automatically by the provisions of the policy, it will be the responsibility of the County Supervisor to have the borrower reinstate as much of the insurance as may be necessary to fulfill the requirements of the FmHA or its successor agency under Public Law 103–354.

(i) *Losses not covered by insurance.* When a loss occurs and insurance is not in force, the County Supervisor will:

(1) Inform the borrower that he has violated the security instrument by not providing insurance coverage and that it is his responsibility to make the needed replacements or repairs.

(2) If the borrower is unable or unwilling to make needed repairs or replacements from his own resources, the County Supervisor will submit complete information to the FmHA or its successor agency under Public Law 103–354 official authorized to determine whether FmHA or its successor agency under Public Law 103–354 will or will not continue with the loan. The County Supervisor's report will include recommendations on the following items:

(i) The advisability and possibility of making a subsequent loan to pay for needed repairs.

(ii) Subordination of the FmHA or its successor agency under Public Law 103–354 real estate lien to permit the borrower to obtain funds for needed repairs from another source.

(iii) The possibility of the borrower obtaining funds secured by a junior lien from another source.

(iv) Whether an advance is needed to protect the Government's interest in the property.

(3) If the loan will not be continued with the borrower, it must be serviced in accordance with the applicable Instructions.

(4) If the borrower has improperly disposed of loss proceeds, the County Supervisor will refer the case with complete information and recommendations to the State Director.

The State Director will consult the Regional Attorney when necessary and advise the County Supervisor as to appropriate servicing actions.

[41 FR 34571, Aug. 16, 1976, as amended at 50 FR 39638, Sept. 30, 1985]

§ 1806.6 Failure of borrower to provide insurance.

When a borrower fails to provide and maintain property insurance which meets the requirements set forth in § 1806.2 of this subpart, every effort will be made to have the borrower provide coverage acceptable to FmHA or its successor agency under Public Law 103–354. It will be emphasized that under the terms of the security instrument, it is the borrower's responsibility to provide and maintain proper insurance coverage. Existing borrowers required to escrow will be notified by letter at least 90 days prior to initiating escrowing for insurance. Failure to provide insurance is a nonmonetary default and will be a consideration in determining if the loan is to be continued. For FP or SFH borrowers *not* required to escrow, the County Supervisor will obtain insurance coverage and voucher for the insurance premium only in cases where: An unusual and severe hazard, such as recurring fires or unstable ground conditions, exists, or, an SFH borrower on a moratorium is unable to pay the insurance premium and the borrower requests that FmHA or its successor agency under Public Law 103–354 pay the premium. For SFH borrowers required to escrow, force placed insurance will be obtained if the borrower fails to provide acceptable insurance. Borrowers being phased into escrow will be given at least 30 days to obtain coverage, after which force placed insurance will be obtained. If the escrow account contains insufficient funds to pay the insurance when due, the County Supervisor will request the borrower to pay an amount equal to the difference between the premium due and the escrow balance in a lump sum within 30 days after notification. If the borrower fails to remit the amount requested, the amount will be advanced and charged to the borrower's account as a recoverable cost. The amortization period for an advance due to an escrow shortage will be one year. Insurance coverage shall be provided continuously unless the property is acquired by FmHA or its successor agency under Public Law 103–354. The cost of obtaining such a policy shall be advanced and charged to the borrower's account as a recoverable cost. Amortization of the charge will be handled in accordance with § 1951.310 of subpart G of part 1951 of this chapter. If a borrower indebted for other than an FP or SFH loan fails to provide acceptable insurance, the Servicing Official will take the following action:

(a) *Expired policies.* (1) The County Supervisor will request the insurance agency or broker who issued the expired policy to issue a new policy which is acceptable to the FmHA or its successor agency under Public Law 103–354.

(i) The new policy will be effective as of the date of the County Supervisor's contact with the insurance agency or broker or as soon thereafter as possible, and will be for a term of one year. If State insurance regulations require a longer term, the State Director will issue a State Instruction authorizing County Supervisors to obtain policies for the minimum period permitted by State insurance regulations.

(ii) The FmHA or its successor agency under Public Law 103–354 will be shown in the loss payable clause and in the mortgage clause in the proper order of priority.

(iii) Insurance coverage on each building usually will be the same as shown on the expired policy if it meets or exceeds FmHA or its successor agency under Public Law 103–354 requirements. If the coverage shown on the expired policy does not meet FmHA or its successor agency under Public Law 103–354 requirements, proper coverage will be obtained.

(iv) The County Supervisor will, if possible, have an automatic renewal provision included in the policy.

(v) If the borrower refuses to pay the insurance premium with his own funds or arrange with the agent for subsequent payment by premium not or otherwise, the County Supervisor will pay the amount of the insurance premium in accordance with FmHA or its successor agency under Public Law 103–354 Instruction 2024–A. The amount of the

premium payment will be charged to the borrower's FmHA or its successor agency under Public Law 103–354 account with the highest lien priority as a recoverable cost item.

(vi) If the insurance agency or broker who issued the expired policy refuses to issue a new policy, the County Supervisor will have the borrower designate in writing another insurance agency or broker from whom the insurance can be obtained.

(vii) After the County Supervisor and the borrower exhaust all efforts to obtain acceptable insurance, the County Supervisor will request advice from the State Office as to companies issuing acceptable policies in the State and from which the borrower might be able to obtain an acceptable policy. If the borrower still cannot obtain an acceptable policy from any such company, and the determination has been made to continue with the borrower, the County Supervisor will temporarily accept from the borrower the available insurance policy the FmHA or its successor agency under Public Law 103–354 determines most nearly conforms to the requirements of §1806.2 of this subpart.

(A) In making this determination, the following deficiencies become more objectionable in the order from (*1*) to (*5*) paragraphs (a)(1)(vii)(A) of this section:

(*1*) A policy written for an initial term of less than one year.

(*2*) A policy which will insure the most essential buildings but will not cover all essential buildings.

(*3*) A policy which covers major risks such as fire and lightning, but does not include one or more of the other risks specified in §1806.2(8).

(*4*) A policy for a lesser amount of insurance than is required by §1806.3.

(*5*) A policy that is issued by a company which is not licensed to do business in the State or otherwise does not meet the requirements of §1806.3.

(B) Whenever adequate insurance becomes available, the County Supervisor will require the borrower to deliver to the County Office an acceptable insurance policy. The temporary policy will be returned to the borrower for cancellation after all losses claimed under the policy have been settled.

(C) If the borrower is unable to furnish a property insurance policy of any kind, he is still responsible for the debt in the event of loss.

(D) If the County Supervisor accepts an inadequate insurance policy under these conditions or the borrower fails to furnish any insurance policy, the County Supervisor will include in his report to the State Director an explanation of the efforts he and the borrower made to obtain acceptable insurance and his justification for accepting an inadequate policy, or for not obtaining an insurance policy of any kind.

(b) *Insurance canceled for reasons other than nonpayment of insurance premium.* (1) The County Supervisor, immediately upon receipt of a 10-day notice of cancellation for a policy, will urge the borrower to provide acceptable insurance.

(2) If the borrower fails to provide acceptable insurance before the cancellation is effective, the County Supervisor will contact the insurance agency or broker who issued the insurance policy to determine the reasons for cancellation and, if possible, have the policy reinstated.

(3) If the insurance company will not reinstate the policy, the County Supervisor will attempt to obtain an acceptable insurance policy from another agency or broker in accordance with the provisions of paragraph (a) of this section.

(c) *Insurance canceled for nonpayment of premium.* (1) The County Supervisor, immediately upon receiving a 10-day cancellation notice for a policy, will, if possible, contact the borrower in an effort to have him pay the insurance premium from his own funds or arrange with the agent for subsequent payment by premium note, or otherwise.

(2) If the borrower does not pay or arrange to pay the premium before the policy cancellation is effective, the County Supervisor will, before the cancellation becomes effective, notify the insurance company or broker by certified mail (return receipt requested), that the FmHA or its successor agency under Public Law 103–354 as mortgagee (or trustee) will pay the premium for one year to continue the policy in effect for that period. The County Supervisor will, in accordance with FmHA or

its successor agency under Public Law 103–354 Instruction 2024–A, pay the amount of the premium for a period of one year. The amount of the premium will be charged to the borrower's loan account as a recoverable cost item.

(3) If a property insurance mortgage clause other than Form FmHA or its successor agency under Public Law 103–354 426–2 is used in connection with the policy and the insurance company or broker refuses to accept payment from the FmHA or its successor agency under Public Law 103–354 in this manner to reinstate or continue the policy, the County Supervisor will attempt to obtain an acceptable insurance policy from another insurance company or broker in accordance with the provisions of paragraph (a) of this section.

(7 U.S.C. 1989; 42 U.S.C. 1480; 42 U.S.C. 2942; 5 U.S.C. 301; Sec. 10 Pub. L. 93–357, 88 Stat. 392; delegation of authority by the Secretary of Agriculture, 7 CFR 2.23; delegation of authority by the Assistant Secretary for Rural Development, 7 CFR 2.70; delegation of authority by Director OEO 29 FR 14764, 33 FR 9850)

[41 FR 34571, Aug. 16, 1976, as amended at 42 FR 33263, June 30, 1977; 43 FR 34430, Aug. 4, 1978; 50 FR 39638, Sept. 30, 1985; 56 FR 6945, Feb. 21, 1991; 57 FR 36590, Aug. 14, 1992]

EXHIBIT A TO SUBPART A—ESCROW AGREEMENT REAL PROPERTY INSURANCE

Date _____
(Name of bank) _____
(City or town) _____
(State) _____

Gentlemen: Attached is Draft No. ____, for $____, issued by the _____ Insurance Company in payment of ____ loss which damage the buildings on the farm of _____, of _____ County, State of _____.

This draft has been endorsed by the undersigned payees who request that you collect these funds and issue cashier's checks to the following payees for the following amounts:

_____, First Mortgage $____
_____, Second Mortgage $____
_____, Third Mortgage $____

The balance only, if any, will be paid to _____, the owner of the property.

_____
First Mortgagee _____

_____
Second Mortgagee _____

_____
Third Mortgagee _____

_____
Owner _____

Subpart B—National Flood Insurance

AUTHORITY: 7 U.S.C. 1989; 42 U.S.C. 1480; 40 U.S.C. 442; 42 U.S.C. 2942; 5 U.S.C. 301; delegation of authority by the Sec. of Agri., 38 FR 14944 (7 CFR 2.23); delegation of authority by the Asst. Sec. for Rural Development, 38 FR 14944, 14952 (7 CFR 2.70).

SOURCE: 39 FR 17093, May 13, 1974, unless otherwise noted.

§ 1806.21 General.

(a) *Authority.* This subpart prescribes the policies and procedures to be followed in implementing the National Flood Insurance Act of 1968 as amended by the Flood Disaster Protection Act of 1973. The provisions of these Acts are applicable to Farmers Home Administration (FmHA) or its successor agency under Public Law 103–354 authorities permitting financing of buildings of any type now located in or to be located in special flood or mudslide prone areas as designated by the Federal Insurance Administration (FIA) of the Department of Housing and Urban Development (HUD), and any machinery, equipment, fixtures and furnishings contained or to be contained therein.

(b) *Background.* The Congress has found that annual losses throughout the nation caused by floods and mudslides are increasing at an alarming rate, largely as a result of the accelerated development and concentration of populations in areas subject to floods and mudslides. The availability of Federal funds in the form of loans, grants, guarantees, insurance and other forms of financial assistance are often determining factors in the utilization of land and the location and construction of industrial, commercial and residential facilities.

(c) *Scope.* The National Flood Insurance Program (the program) was authorized and created because the private insurance industry has been unable to provide insurance coverage at reasonable prices for such natural disasters as floods and mudslides. Subsidized and affordable insurance has been made available under the Act through an agreement between the Federal Insurance Administration and

the National Flood Insurers Association.

§ 1806.22 Areas of responsibility.

(a) *Federal Insurance Administration* (*FIA*). (1) Identify and publish information with respect to all areas in the country which are subject to floods and mudslides and designate those areas on Flood Hazard Boundary maps.

(2) Notify affected communities of their designations and encourage them to adopt and enforce land use and other control measures and to adopt ordinances or laws which will regulate and control construction in areas designated as having special flood or mudslide hazards.

(3) Make flood insurance available at reasonable rates in sufficient amounts, within the statutory limits, to adequately protect owners against loss to their buildings and contents when those buildings are located in or will be located in designated special flood and mudslide prone areas in communities participating in the National Flood Insurance Program.

(b) *Farmers Home Administration or its successor agency under Public Law 103–354.* The State Director, after being notified by the FmHA or its successor agency under Public Law 103–354 National Office or FIA of designated flood or mudslide hazard areas and receiving flood hazard boundary maps identifying the hazard areas, FIA insurance rate charts, or other information concerning the program, will inform the appropriate County Supervisors and provide them the maps, rate charts, and other relevant information concerning the program in areas they serve. Permanent records indicating the date a community was notified as containing identified flood hazard areas, communities participating in the program, and communities eligible to participate but not participating in the program will be maintained in the State Office. County Supervisors will notify, in writing, those borrowers whose insurable buildings are located in designated flood or mudslide hazard areas of the availability of national flood insurance and encourage them to obtain flood insurance to protect their and the Government's financial interest.

(c) *Community.* Communities are required to participate in the National Flood Insurance Program within 1 year after notification of its formal identification as a community containing one or more special flood and mudslide prone areas, or by July 1, 1975, whichever is later, or be denied Federal financial assistance or Federally-related financial assistance for acquisition or construction purposes in such areas. Communities wishing to qualify for the program may submit a completed application to: Administrator, Federal Insurance Administration, Department of Housing and Urban Development, 451 Seventh Street, SW., Washington, DC 20410.

(d) *Lender.* The lender must determine whether real property is located in an area identified as having special flood or mudslide hazards and cannot discharge the responsibility merely by obtaining a self-certification from the applicant that the property is not located in an area having special flood hazards.

§ 1806.23 Definitions.

For the purpose of this subpart, the following definitions apply:

(a) *Financial assistance* means any form of direct, insured or guaranteed loan, including reamortization and assumption on new terms of any loan, any form of grant, or other form of direct or indirect assistance extended by the FmHA or its successor agency under Public Law 103–354.

(b) *Financial assistance for acquisition or construction purposes* means any form of Federal financial assistance which is intended in whole or in part for the acquisition, construction, reconstruction, or substantial improvement of any building and for any machinery, equipment, fixtures and furnishings contained or to be contained in such buildings.

(c) *Community means* any state or political subdivision thereof, such as county, parish, township, city or other local government which has zoning and building code jurisdiction over a particular area having special flood hazards.

(d) *Eligible community* means a community in which the Administrator of

FIA has authorized the sale of flood insurance under the program.

(e) *Designated special flood* or *mudslide prone* area means those areas in a community subject to flood or mudslide which have been identified by flood hazard boundary maps or those areas not identified by maps but where, due to emergency, the FIA Administrator has authorized the sale of flood insurance.

(f) *Flood* means a general and temporary condition of partial or complete inundation of normally dry land areas from the overflow of streams, rivers, or other inland water, the collapse or subsidence of land along the shore of a lake or other body of water as a result of erosion or undermining caused by waves or currents of water exceeding anticipated cyclical levels, or abnormally high tidal water or rising coastal waters resulting from severe storms, hurricanes, or tidal waves resulting from volcano eruptions or earthquakes.

(g) *Mudslide* or *mudflow* means a major occurrence involving the appearance of a large river or flow of ''liquid mud'' down a hillside, usually as a result of earlier brushfires followed by heavy rains over a widespread area.

(h) *Flood insurance* means insurance coverage for floods and/or mudslides under the program or otherwise acceptable to FIA.

(i) *Building* means any walled and roofed structure, other than a gas or liquid tank, that is principally above ground and affixed to a permanent site. Residential and most types of industrial, commercial, and agricultural buildings, such as lumber sheds, machinery storage sheds, grain storage bins, and silos, are included in this definition.

(j) *Substantial improvement* means any repair, reconstruction or improvement of a structure, the cost of which equals or exceeds 50 percent of the actual cash value of the structure either before the improvement is started or, if the structure has been damaged and is being restored, before the damage occurred.

§ 1806.24 Eligibility.

In addition to an applicant meeting the requirements for the type of financial assistance requested, the following requirements for eligibility of applicants for financial assistance for acquisition and construction purposes in designated special flood and mudslide prone areas must be met:

(a) If flood insurance is available, to be eligible after March 1, 1974, the applicant must have purchased a flood insurance policy at the time the loan or grant is closed.

(b) Applicants will not receive financial assistance in those communities that have been notified as having special flood and mudslide prone areas and where flood insurance is not available within 1 year after such notification or by July 1, 1975, whichever is later.

§ 1806.25 Conditions.

FmHA or its successor agency under Public Law 103–354 financial assistance may be extended to eligible applicants meeting the eligibility requirements of § 1806.24 of this subpart, provided the following conditions are also met:

(a) *Dwelling and multi-unit housing facilities.* (1) If the financial assistance is to buy a dwelling or multi-unit housing facility:

(i) The first floor elevation of the habitable space of the dwelling or housing unit must be above the 100-year flood level.

(ii) The housing must be served by public utilities and facilities, such as sewer, gas, electrical and water systems that are located and constructed to minimize or eliminate flood damage, or have an onsite water supply system and waste disposal system located so as to avoid impairment of such systems and contamination from the waste disposal system to the water supply system from flooding.

(2) If the financial assistance is to build or provide substantial improvement, the requirements of paragraph (a)(1) of this section must be met and all construction must meet requirements of the applicable development standards, and:

(i) A building permit must be issued by the appropriate governing officials having jurisdiction in the area and compliance must be had with the zoning code or other established legal requirements of the area for reducing or eliminating flood or mudslide damage.

(ii) The structure must be designed and anchored to prevent flotation, collapse or lateral movement of the structure.

(iii) Construction materials and utility equipment that are resistant to flood damage must be used.

(iv) Construction methods and practices that will minimize flood damage must be followed.

(3) If the financial assistance is to make minor repairs, the conditions of paragraphs (a)(1) (i) and (ii) and (2) (i), (ii) and (iii) of this section must be met or the building must have existed on the site prior to the date the area was identified as having special flood or mudslide hazards and the loan approval official must determine that the dwelling is suitable as a residence.

(4) When applications for financial assistance are received in areas identified as having special flood and mudslide hazards, the loan approval official will consider the expected severity and frequency of floods and mudslides in determining whether any housing loans should be made in the area. He should be sure, if loans are made, that the objectives of the loans can be accomplished and the Government's financial interest will be adequately protected.

(b) *Nonresidential buildings.* Construction plans and specifications for new buildings or improvements to existing buildings must comply with flood plain area management or control laws, regulations or ordinances.

(c) *Flood insurance coverage.* (1) Any property on which flood insurance is required must be covered by such insurance during its anticipated economic and useful life in an amount at least equal to its development or replacement cost (except estimated land cost), or to the maximum limit of coverage made available with respect to the particular type of property under the National Flood Insurance Program, whichever is less. However, if the financial assistance provided is in the form of a loan, the amount of flood insurance required need not exceed the outstanding principal balance of the loan and need not be required beyond the term of the loan.

(2) The contents of a building must be insured separately from a building but coverage cannot be written on the contents of a three-walled machinery shed or similar type open building.

(3) Flood insurance shall not be required on any state owned property that is covered under an adequate state policy of self-insurance satisfactory to the Secretary of HUD, who will publish a list of states with such policies.

(4) It will be emphasized that under the terms of the security instrument it is the borrower's responsibility to provide and maintain proper flood insurance coverage. If flood insurance is not provided on any property for which it is required, the flood insurance premium will be paid to protect the Government's security interest. For borrowers required to escrow for flood insurance, payment of the premium will be handled in accordance with § 1806.28 of this subpart. Existing borrowers required to escrow will be notified by letter at least 90 days prior to initiating escrowing for flood insurance. If FmHA or its successor agency under Public Law 103–354 pays the flood insurance premium for borrowers not required to escrow, the cost will be charged to the borrower's account as a recoverable cost. Failure to provide flood insurance is a nonmonetary default and will be a consideration in determining if the loan is to be continued.

[39 FR 17093, May 13, 1974, as amended at 52 FR 8002, Mar. 13, 1987; 56 FR 6945, Feb. 21, 1991]

§ 1806.26 Coverage and premium rates.

Exhibit A sets forth limits of coverage and chargeable premium rates under the program. Insurance policies under the program can be obtained from any licensed property insurance agent or broker serving the eligible community or from the National Flood Insurers Association Serving Company (Serving Company) for the state. The Servicing Company for each state is shown in exhibit B.

§ 1806.27 Acceptable policies and servicing.

The general acceptance of policies and servicing of insurance will be performed in accordance with Subpart A of this part. Any unusual situations that may arise with respect to obtaining or servicing flood insurance should be referred to the State Director. The

State Director will attempt to resolve any problems concerning the flood insurance program in the state with the Servicing Company. Flood hazard boundary maps, insurance rate tables, the insurability of specific structures, and other information concerning the program may be obtained from the Servicing Company. Difficulties in administering the program which the State Director is unable to resolve should be referred to the National Office for Assistance.

§ 1806.28 Borrowers required to escrow.

For borrowers required to use escrow accounts for the payment of real estate taxes and insurance, the flood insurance premium will be paid when due from funds contained in the escrow account. If the escrow account contains insufficient funds to pay the flood insurance premium when due, the County Supervisor will request the borrower to pay an amount equal to the difference between the premium due and the escrow balance in a lump sum within 30 days after notification. If the borrower fails to remit the amount requested, the amount will be advanced and charged to the borrower's account as a recoverable cost. The amortization period for an advance due to an escrow shortage will be one year. Amortization of the charge will be handled in accordance with § 1951.310 of subpart G of part 1951 of this chapter. When a borrower has more than one loan secured by the real estate on which the flood insurance premium is being paid, the advance will be charged to the initial or lowest numbered loan.

[56 FR 6946, Feb. 21, 1991]

EXHIBIT A TO SUBPART B TO PART 1806—COVERAGE AND PREMIUM RATES

1. The following table sets forth the limits of coverage available under the program:

Type of structure	Structure coverage		Contents of coverage [4]	
	Subsidized	Total [3]	Subsidized	Total [3]
Single family, residential [1]	$35,000	$70,000	$10,000	$20,000
All other, residential [1]	100,000	200,000	10,000	20,000
All nonresidential [2]	100,000	200,000	100,000	200,000

[1] For Alaska, Hawaii, and the Virgin Islands, the following limits of coverage apply: Structure coverage for one family residential is $50,000 subsidized and $100,000 total coverage, and structure coverage for other residential is $150,000 subsidized and $300,000 total coverage.

[2] Includes hotels and motels with normal occupancy of less than 6 months.

[3] Coverage in amounts exceeding the subsidized limits is available only after an actuarial cost has been established and flood insurance rate may be issued.

[4] Contents of a building must be insured separately from the building. However, coverage is applicable to contents only while in an enclosed building. Therefore, coverage cannot be written on the contents of a three-walled machinery shed or a similar type open building.

2. The following table sets forth the applicable premium rates:

Type of structure	Rates per $100 of coverage (subsidized only)	
	Structures	Contents
All residential	[1]$0.25	$0.35
All nonresidential	[1].40	.75

[1] Actuarial (nonsubsidized) rates are applicable to any structure, the construction or substantial improvement of which started after Dec. 31, 1974, or the date on which the initial rate map was issued, whichever is later, in identified areas having special flood or mudslide hazards.

EXHIBIT B TO SUBPART B TO PART 1806—SERVICING COMPANY

The servicing company office to be contacted for information relative to the availability of coverage under the national flood insurance program, flood hazard boundary maps, insurance rate tables, and related material.

E.D.S. Federal Corporation, National Flood Insurance, P.O. Box 34294, Bethesda, Md. 20034, phone toll-free 800–638–6620; commercial phone 301–898–5900.

(7 U.S.C. 1989; 42 U.S.C. 1480; 42 U.S.C. 2942; 5 U.S.C. 301; delegation of authority by the Secretary of Agriculture, 7 CFR 2.23; delegation of authority by the Assistant Secretary for Rural Development, 7 CFR 2.70)

[43 FR 18538, May 1, 1978]

PART 1807—[Reserved]

PART 1809—[Reserved]

PART 1810—INTEREST RATES, TERMS, CONDITIONS, AND APPROVAL AUTHORITY

Subpart A—Interest Rates, Amortization, Guarantee Fee, Annual Charge, and Fixed Period

Sec.
1810.1 Information concerning interest rates, amortization, guarantee fee, annual charge, and fixed period.
1810.2 Adjustment of interest rates for certain loans involving use of or construction on prime or unique farmland.

Subpart B—[Reserved]

AUTHORITY: 7 U.S.C. 1989; 14 U.S.C. 1480; 7 CFR 2.23; 7 CFR 2.70.

Subpart A—Interest Rates, Amortization, Guarantee Fee, Annual Charge, and Fixed Period

§1810.1 Information concerning interest rates, amortization, guarantee fee, annual charge, and fixed period.

(a) Tables for computing the interest rates (including the annual charge rates and length of fixed period for initial repurchase agreement for insured loans), tables for use in determining the amounts of interest on loans at different rates, tables providing factors in amortizing loans, and the guarantee fee for guaranteed loans, may be obtained from any County, District, or State Office of FmHA or its successor agency under Public Law 103–354 or from its National Office at 14th and Independence Avenue SW., Washington, DC 20250.

(b) In the event that the tables provided for in paragraph (a) of this section do not furnish adequate information, questions should be directed to the Assistant Administrator, Finance Office, Farmers Home Administration or its successor agency under Public Law 103–354, 1520 Market Street, St. Louis, Missouri 63103.

[56 FR 11503, Mar. 19, 1991]

§1810.2 Adjustment of interest rates for certain loans involving use of or construction on prime or unique farmland.

(a) For essential community facility loans, insured farm ownership loans for recreation or non-farm enterprises, insured farm operating loans for recreation enterprises, soil and water loans for recreation purposes, individual recreation loans, and insured business and industry loans, the interest rate will be increased by two per centum per annum if the project being financed will involve the use of, or construction on, prime or unique farmland. Prime or unique farmland is as defined in §657.5 (a) and (b) of title 7, Code of Federal Regulations (1980).

(b) The two per centum interest rate increase will not apply if the applicant/borrower is a public body or Indian tribe and has demonstrated to FmHA or its successor agency under Public Law 103–354 that there are no suitable options for locating the proposed essential community facility project on land that is not prime or unique farmland.

(c) For each essential community facility loan and insured business and industry loan the District Director, after consultation with the Soil Conservation Service (SCS), will determine whether the proposed project will involve the use of, or construction on, prime or unique farmland. For each insured farm ownership loan for a recreation or non-farm enterprise, insured farm operating loan for a recreation enterprise, soil and water loan for a recreational purpose, or individual recreation loan, the County Supervisor, after consultation with SCS, will determine whether the proposed project will involve the use of, or construction on, prime or unique farmland. The determination will be documented by FmHA or its successor agency under Public Law 103–354 and made a part of the official case file.

[46 FR 47763, Sept. 30, 1981, as amended at 56 FR 11503, Mar. 19, 1991]

Subpart B—[Reserved]

SUBCHAPTER B—LOANS AND GRANTS PRIMARILY FOR REAL ESTATE PURPOSES

PART 1822—RURAL HOUSING LOANS AND GRANTS

Subparts A–F [Reserved]

Subpart G—Rural Housing Site Loan Policies, Procedures, and Authorizations

Sec.
1822.261 General.
1822.262 Objective.
1822.263 Definitions.
1822.264 Eligibility requirements.
1822.265 Loan purposes.
1822.266 Limitations.
1822.267 Special conditions.
1822.268 Rates, terms, and source of funds.
1822.269 Security.
1822.270 Technical, legal, and other services.
1822.271 Processing applications.
1822.272 Approval or disapproval of a loan.
1822.273 Actions subsequent to loan approval.
1822.274 Loan closing.
1822.275 Actions after sites are developed.
1822.276 Subsequent RHS loans.
1822.277 Complaints regarding discrimination in opportunity to buy developed sites.
1822.278 Special requirements for RHS section 523 loans (loans to organizations providing sites for self-help housing).
1822.279 Loan supervision and servicing.

EXHIBITS A–B TO SUBPART G TO PART 1822 [RESERVED]
EXHIBIT C TO SUBPART G TO PART 1822—SUBORDINATION BY THE GOVERNMENT FOR USE WITH RURAL HOUSING SITE LOANS

AUTHORITY: 42 U.S.C. 1480; 5 U.S.C. 301; 7 CFR 2.23; 7 CFR 2.70.

Subparts A–F—[Reserved]

Subpart G—Rural Housing Site Loan Policies, Procedures, and Authorizations

AUTHORITY: Sec. 523, 82 Stat. 553, 42 U.S.C. 1490c; sec. 524, 83 Stat. 399; sec. 502, 63 Stat. 433, as amended, 42 U.S.C. 1472; sec. 101(a), 82 Stat. 477, 12 U.S.C. 1715z; sec. 201, 82 Stat. 498, 12 U.S.C. 1715z–1; Orders of Secy. of Agr., 29 FR 16210, 32 FR 6650.

SOURCE: 35 FR 16087, July 1, 1970, unless otherwise noted.

§ 1822.261 General.

This subpart sets forth the policies and procedures and delegates authority for making Rural Housing Site (RHS) loans under sections 523 and 524 of the Housing Act of 1949. Any processing or servicing activity conducted pursuant to this subpart involving authorized assistance to FmHA or its successor agency under Public Law 103–354 employees, members of their families, known close relatives, or business or close personal associates, is subject to the provisions of subpart D of part 1900 of this chapter. Applicants for this assistance are required to identify any known relationship or association with an FmHA or its successor agency under Public Law 103–354 employee. Section 523 loans are direct loans for the purchase and development of building sites for housing to be built by the self-help method; they have additional requirements which are contained in § 1822.278.

[35 FR 16087, July 1, 1970, as amended at 58 FR 224, Jan. 5, 1993]

§ 1822.262 Objective.

The basic objective of RHS loans is to assist public or private nonprofit organizations interested in providing sites for housing, to acquire and develop land in rural areas. This land will be subdivided into adequate building sites and sold on a nonprofit basis to (a) families eligible for low and moderate income section 502 Rural Housing (RH) loans, including self-help housing; (b) cooperative Rural Cooperative Housing (RCH) applicants and broadly based nonprofit Rural Rental Housing (RRH) applicants; and (c) applicants eligible for Housing and Urban Development (HUD) sections 235 and 236 insured mortgages.

§ 1822.263 Definitions.

As used in this subpart:

(a) A *private nonprofit organization* is a corporation which: is owned and controlled by private persons; is organized and operated for purposes other than

making gains or profits for the corporation or members; and, is legally precluded from distributing to its members any gains or profits.

(b) A *public nonprofit organization* is a nonprofit corporation other than a private nonprofit corporation, including a municipal corporation or other corporate agency of a State or local government.

(c) *Rural area* is open country or rural places as defined in §1944.10 of subpart A.

(d) *Development cost* means the cost of purchasing and developing the sites including engineering and legal fees, streets, roads, utilities, minimum essential administrative costs, necessary equipment and estimated interest which the borrower cannot pay from other sources.

(e) *RHS section 523 loan* means a loan to an organization which will provide sites for housing to be built by the self-help method.

(f) *RHS section 524 loan* means a loan to an organization which will provide sites for housing to be built with no limitation as to the method of construction that will be used.

(g) *OGC* means the Office of the General Counsel, including the regional attorney or attorney in charge serving the State in which the RHS project is located.

[35 FR 10687, July 1, 1970, as amended at 40 FR 52837, Nov. 13, 1975; 46 FR 61989, Dec. 21, 1981]

§1822.264 Eligibility requirements.

(a) *Eligibility of applicant.* To be eligible for an RHS loan, the applicant must be a private or public nonprofit organization as defined in §1822.263 (a) or (b) which is authorized to provide housing sites on a nonprofit basis.

(1) If it is a private nonprofit organization as defined in §1822.263(a), it should also:

(i) Have a membership of at least 10 community leaders.

(ii) Plan to adopt, if it is being newly organized, articles of incorporation and bylaws that generally conform to model articles and bylaws provided by the State director which will be consistent with State law and with changes appropriate to the purposes and powers of an eligible applicant under this subpart.

(2) [Reserved]

(b) *Authorized representative of applicant.* The Farmers Home Administration (FmHA) or its successor agency under Public Law 103–354 will deal only with the applicant or bona fide representative or the applicant or the representative's technical advisors. An authorized representative of the applicant must have no pecuniary interest in the award of the engineering, architectural or construction contracts, necessary equipment, or the purchase or development of the land.

§1822.265 Loan purposes.

RHS loans may be made to qualified applicants:

(a) For the purchase and development of adequate sites, including the construction of essential access roads, streets, utility lines, and necessary equipment which will become a permanent part of the development. If public water and waste disposal facilities are not available and cannot reasonably be provided on a community basis with other financing, including FmHA or its successor agency under Public Law 103–354 Water and Waste Disposal Association loans, funds may be included for this purpose.

(b) For the payment of necessary engineering fees, legal fees, and closing costs.

(c) For the payment of actual cash cost of incidental administrative expenses such as postage, telephone, advertising, and temporary secretarial help, if funds to pay these expenses are not otherwise available. The estimated cost of these items should be identified and shown in the budget.

(d) To provide for needed landscaping, planting, seeding, or sodding, or other necessary facilities related to buildings such as walks, parking areas, and driveways.

(e) When legally required by proper local, county, and State Governmental bodies as a condition for subdivision approval, RHS loan funds may be used to provide common areas playgrounds and tot lots, provided such facilities are dedicated to, and maintained by, a public body.

(42 U.S.C. 1480; delegation of authority by the Sec. of Agri., 7 CFR 2.23; delegation of authority by the Asst. Sec. for Rural Development, 7 CFR 2.70)

[35 FR 16087, July 1, 1970, as amended at 43 FR 24264, June 5, 1978]

§ 1822.266 Limitations.

(a) *Loan limits.* No RHS loan(s) will be made to any applicant which will result in the applicant's owning an unpaid principal balance of more than $100,000 on such loan(s) unless prior authorization for a larger loan is obtained from the national office. No such loan will exceed the development cost as defined in § 1822.263(d), or the value of the property as improved with the loan. These limitations also apply to cases in which the same persons hold a majority of the membership interests or constitute a majority of the directors of two or more applicants.

(b) *Limitations of use of loan funds.* Loans will not be made for:

(1) The purchase of land in excess of the immediate and identified needs in the locality.

(2) The purchase of land from a member of an applicant-organization, or from another organization in which any member of the applicant-organization has an interest, without prior consent of the national office.

(3) Refinancing of debts, except in accordance with paragraph (e) of this section.

(4) Payment of any fee, charge, or commission to any broker, negotiator, or other person for the referral of a prospective applicant or solicitation of a loan.

(5) Payment of any fee, salary, commission, profit, or compensation to an applicant, or to any officer, director, trustee, stockholder, member or agent of an applicant, except as provided in § 1822.265(b). No contract or agreement for services to be paid for with loan funds should be executed by the applicant without prior approval by the State director.

(c) *Sale of developed sites.* The sites developed with a section 524 loan must be for housing low- and moderate-income families and may be sold to families, nonprofit organizations, public agencies, and cooperatives eligible for assistance under any section of title V of the Housing Act of 1949, or under any other law which provides financial assistance. For example, this may include:

(1) Individuals with low and moderate incomes eligible for HUD mortgages.

(2) Individuals with low and moderate incomes eligible for VA guaranteed loans.

(3) Individuals with low or moderate incomes eligible for a loan from any private lender which is authorized by law to provide financial assistance for housing.

(4) Nonprofit organizations funded by Federal, State, or local governments carrying out programs for low- and moderate-income families to obtain housing.

(5) State or local public agencies such as a housing authority or a housing finance development agency carrying out programs for low- and moderate-income families to obtain housing.

(d) *Suitability of sites.* Sites will meet the requirements of the planned use; for example, individual housing or multiple housing or any combination thereof. Building sites must be well located and designed to provide a desirable living environment. Generally a loan will not be made for the development of less than 10 units, but they need not be contiguous.

(e) *Obligations incurred before loan closing.* When an applicant files an application for a loan, the county supervisor will advise the applicant that development work must not be started and obligations for work, materials, or land purchase must not be incurred before the loan is closed. If, nevertheless, the applicant incurs obligations for work, materials, or land purchase before the loan is closed, the State director may authorize the use of loan funds to pay such obligations only when he finds that all the following conditions exist:

(1) The obligations were incurred after the applicant filed a written application for a loan.

(2) The applicant is unable to pay such obligations from its own resources or to obtain credit from other sources, and failure to authorize the use of loan funds to pay such debts would impair the applicant's financial position.

(3) The obligations were incurred for authorized loan purposes.

(4) Contracts, materials, development and any land purchase meet FmHA or its successor agency under Public Law 103–354 standards and requirements.

(5) Payment of the obligations will remove any liens which have attached, and any basis for liens that may attach, to the property on account of such obligations or such work, materials, or land purchase.

[35 FR 10687, July 1, 1970, as amended at 40 FR 6951, Feb. 18, 1975]

§ 1822.267 Special conditions.

(a) *Evidence of need.* Loans will be made on the basis of the applicant providing firm information as to the number of sites to be developed and evidence of a need for the proposed building sites in the locality.

(b) *Nondiscrimination.* The borrower will be required to agree not to discriminate or permit discrimination, in accordance with section 3 of the loan resolution form ''('Rural Housing Site' Loan to Nonprofit Corporation),'' available at all FmHA or its successor agency under Public Law 103–354 offices.

(c) *Supervisory assistance.* Supervision will be provided borrowers to the extent necessary to achieve the objectives of the loan and to protect the interests of the Government. County supervisors will counsel with applicants in selecting locations that will provide essential services and facilities and will result in the development of desirable residential communities.

(d) *Loan resolution.* A Loan Resolution will be adopted by the applicant's Board of Directors or similar governing body using a form entitled, ''((Rural Housing Site) Loan to Nonprofit Corporation)'' available at all FmHA or its successor agency under Public Law 103–354 offices. If any provisions are not appropriate to a particular case, proposed substitute language should be submitted to the national office with the recommendations of the State director.

(e) *Development policies.* Development will be planned and performed in accordance with subparts A and C of part 1924 of this chapter, and certain information in a guide entitled ''Planning and Developing Building Sites'' available at all FmHA or its successor agency under Public Law 103–354 offices.

(f) *Water and waste disposal facilities.* If public water and waste disposal facilities are not available and these facilities will be provided on a community basis with funds included in the RHS loan or with other financing, provision should be made to form an organization with members who will provide continuing maintenance and management of facilities. The cost of the facilities should be considered as a cost of developing the sites and included in the price charged for the lots when they are sold.

(g) *Compliance with local codes and regulations.* Planning and development of sites will comply with all State, county, and local planning and zoning requirements, and will be for housing that will conform with any applicable laws, ordinances, codes, and regulations governing such matters as construction, heating, plumbing, electrical installation, fire prevention, health, and sanitation.

(h) *Optioning of land.* If a loan includes funds to purchase real estate, the applicable provisions of subpart A of part 1943 regarding options will be followed. After the loan is approved, the county supervisor will have Form FmHA or its successor agency under Public Law 103–354 440–35, ''Form Letter—Acceptance of Option,'' or other appropriate form of acceptance, completed, signed by the applicant, and mailed to the seller.

(i) *Use of and accountability for loan funds.* Supervised bank accounts will not be used except when their requirement is made or authorized by the State director for cases where adequate bonding is not available. If a supervised bank account is used, collateral for deposits of funds will be pledged when the supervised bank account exceeds $100,000. All loan funds and funds from other sources to be used to pay the development costs of the site, as well as proceeds from the sale of any sites, will be deposited in accordance with part 1902, subpart A of this chapter. The county supervisor will see that funds for land purchase are paid to the seller simultaneously with loan closing. After the loan is closed, monthly reports will be provided to FmHA or its

successor agency under Public Law 103–354 of all disbursements made and income received by the borrower. Reports for each month will be submitted to the FmHA or its successor agency under Public Law 103–354 county office during the first 10 days of the next month. No expenditures will be made without prior FmHA or its successor agency under Public Law 103–354 consent for items which are not included in the FmHA or its successor agency under Public Law 103–354 approved development cost estimate or for amounts greater than those set forth in such estimate.

(j) *Insurance.* The State director will determine the minimum amounts and types of insurance the applicant will carry.

(1) Suitable workman's compensation insurance will be carried by the applicant for all its employees.

(2) The applicant will be advised of the possibility of incurring liability and encouraged, or required when appropriate, to obtain liability insurance.

(k) *Bonding.* (1) Approved corporate surety bonds will be required in all cases involving a development contract in excess of $20,000, unless an exception is made by the national office. In other cases, the county supervisor will determine whether a surety bond is required.

(2) The applicant will provide fidelity bond coverage for its officers and employees entrusted with the receipt, custody, and disbursement of its funds and the custody of any other negotiable or readily saleable personal property. The amount of the bond will be at least equal to the maximum amount of such funds including funds in bank accounts, and property that the applicant will have in its possession or control at any one time. If permitted by State law, the United States will be named coobligee in the bond. Form FmHA or its successor agency under Public Law 103–354 440–24, ''Position Fidelity Schedule Bond,'' may be used if permitted by State law.

(l) *Conditional commitments for construction of homes on developed sites.* Conditional commitments may be issued on sites developed with an RHS section 524 loan to permit homes to be constructed on sites prior to the sale of the site to an eligible purchaser in accordance with the following:

(1) The requirements of § 1944.45 of part 1944, subpart A must be met and a conditional commitment issued prior to the start of construction of the home.

(2) The conditional commitment must be issued to an RHS borrower who can legally provide the proposed housing and has the experience and training in construction to the extent necessary to assure that the housing will be built or jointly to the RHS loan borrower and a builder who has the legal capacity, training and experience necessary to construct the housing. In all cases the following language will be added under ''other conditions'' on Form FmHA or its successor agency under Public Law 103–354 1944–11, ''Conditional Commitment'':

(i) ''Not withstanding the other provisions of this commitment the sale of completed homes on sites developed with section 524 Rural Housing Site loans will be limited to families eligible for assistance under any section of title V of the Housing Act of 1949 or under any other law which provides financial assistance for housing low- and moderate-income families. The approval of FmHA or its successor agency under Public Law 103–354 will be obtained prior to the sale of each home. The request for approval shall be submitted to the local FmHA or its successor agency under Public Law 103–354 office along with an application for an RH 502 loan or a financial statement from the purchaser and verification of the other credit that is available.''

(ii) The benefits of the nonprofit development of the site(s) must be passed on to the purchaser. This will result in this site being sold for $——— (price to be determined as provided for in (§ 1822.275(b))).

(3) In arriving at the commitment price for the site and the completed home, the value will be based on the present market value of the house only, plus the nonprofit selling price of the lot.

(4) If in order to obtain interim financing for the construction of the homes, the RHS loan borrower requests a subordination by FmHA or its successor agency under Public Law 103–354 on

individual lots, the State Director may approve the subordination by completing and executing a subordination in the format of exhibit C of this subpart.

(5) FmHA or its successor agency under Public Law 103–354's lien on any lot will be released only at the time of sale to an eligible purchaser.

(6) The County Supervisor should provide the necessary supervision to assure that the RHS loan borrower takes the necessary action to assure that all qualified builders in the area are aware of the availability of rural housing sites and are given an equal opportunity to participate in this conditional commitment program. As a minimum, the borrower will be required to submit a signed statement indicating the actions taken including names and dates of contacts with builders.

(7 U.S.C. 1989; 5 U.S.C. 301; sec. 10, Pub. L. 93–347, 88 Stat. 392; 42 U.S.C. 1480; delegation of authority by the Sec. of Agr., 7 CFR 2.23; delegation of authority by the Asst. Sec. for Rural Development, 7 CFR 2.70)

[35 FR 16087, July 1, 1970, as amended at 41 FR 47460, Oct. 29, 1976; 42 FR 44669, Sept. 6, 1977; 43 FR 24264, June 5, 1978; 44 FR 1702, Jan. 8, 1979; 45 FR 39793, June 12, 1980; 46 FR 36106, July 14, 1981; 46 FR 61989, Dec. 21, 1981; 52 FR 8002, Mar. 13, 1987; 52 FR 19283, May 22, 1987]

§1822.268 Rates, terms, and source of funds.

(a) *Interest rate.* Upon request of the applicant, the interest rate charged by FmHA or its successor agency under Public Law 103–354 will be the lower of the interest rates in effect at the time of loan approval or loan closing. If an applicant does not indicate a choice, the loan will be closed at the interest rate in effect at the time of loan approval. Interest rates are specified in exhibit B of FmHA or its successor agency under Public Law 103–354 Instruction 440.1 (available in any FmHA or its successor agency under Public Law 103–354 office) for the type assistance involved.

(b) *Repayment period.* Final payment will be due 2 years after the date of the loan. When necessary to carry out the loan purposes, the national office may authorize extension of maturity dates. As lots are sold before the final due date of the note, the proceeds of the sales will be applied on the account or any prior lien, or, with the prior approval of the national office, used in a manner consistent with the purposes of the loan and the security interest of the Government.

(c) *Source of funds.* Loans under this subpart will be made as insured loans, except that loans under §1822.278 to develop building sites for sale in connection with self-help projects will be made as direct loans.

[35 FR 10687, July 1, 1970, as amended at 51 FR 6733, Feb. 26, 1986]

§1822.269 Security.

Each loan will be secured by a mortgage on the property purchased or improved with the loan, and a security interest in the funds held by the corporation in trust for the Government, in accordance with the provisions of the required Loan Resolution.

§1822.270 Technical, legal, and other services.

(a) *Appraisals.* The property will be appraised by an FmHA or its successor agency under Public Law 103–354 employee authorized to make real estate appraisals. The appraisal will consist of a narrative statement prepared and signed by the authorized employee describing in detail the items considered in arriving at the value of the property. Two values will be established by the appraiser:

(1) The fair market value of the total property ''as is''.

(2) The aggregate fair market value of the building sites after development.

(i) In determining the value of the property, the appraiser will consider the value and selling prices of similar building sites in the area. The selling prices of similar sites must be fully documented.

(ii) [Reserved]

(b) *Title Clearance and Legal Services.* For a loan to a public nonprofit organization, title clearance and legal services will be obtained in accordance with instructions from the OGC, observing the provisions of subpart B of part 1927 of this chapter to the extent feasible. For a loan to a private nonprofit organization, the provisions of subpart B of part 1927 of this chapter regarding title clearance and legal

services will apply. The applicant will be encouraged to have the same approved closing agent, where practical, perform the title clearance work in connection with the purchase of the land and the sale of the individual sites.

(c) *Contracts for legal services.* On projects requiring more legal services than are customarily required for title clearance alone, the applicant will be required to have a written contract when loan funds will be used for legal services. All such contracts will be subject to review and approval by the State director and therefore should be submitted to the State Director before execution by the applicant. Contracts will provide for the types of service to be performed and the amount of fees to be paid either in lump sum on the completion of all services or in installments as services are performed.

(d) *Engineering services.* On projects requiring engineering services, a written contract will be required between the engineer and the borrower. All such contracts will be subject to review and approval by the State director and therefore should be submitted to the State Director before execution by the applicant. The form of contract must conform with standard professional practices and describe the types of services to be performed and fees to be paid.

[35 FR 16087, July 1, 1970, as amended at 51 FR 6733, Feb. 26, 1986; 56 FR 67471, Dec. 31, 1991]

§ 1822.271 Processing applications.

(a) *Application.* The application will be in the form of a letter to the county supervisor with the following information included in or attached to the letter:

(1) Name and address of applicant.

(2) A copy of, or an accurate citation to, the specific provisions of State law under which the applicant is organized; a copy of the applicant's articles of incorporation, bylaws, and other authorizing documents; the names and addresses of the applicant's members, directors, and officers; and if another organization is a member of the applicant organization its name, address, and principal business.

(3) A current, dated, and signed financial statement showing assets, and liabilities, together with information on the repayment schedule and status of each debt.

(4) Evidence of inability to obtain credit from other sources.

(5) General description of the project.

(i) Location and size of tract or tracts to be bought and/or developed.

(ii) Number and size of individual sites planned together with a detailed plot plan.

(iii) Preliminary engineering plans, if available.

(6) Estimated cost and amount of loan needed.

(7) Explanation of applicant's financial contribution to the project.

(8) A map showing the location of and other supporting information on neighborhood and existing facilities such as distance to shopping area, neighborhood churches, available transportation, drainage, sanitation facilities, water supply available or planned, and access to essential services such as doctors, dentists, and hospitals.

(9) If facilities such as water and sewage systems, paved streets, and utilities are not currently available, information on when and how they will be provided.

(10) Evidence of the need for the proposed sites in the locality by low- and moderate-income families and other qualified applicants that are likely to be able to obtain financing for a home.

(11) Written evidence of any State, county, or local planning, zoning, or other ordinances imposing additional restrictions or requirements upon the proposed sites.

(b) *County supervisor's review and evaluation of applications.* The county supervisor will:

(1) Determine that the applicant meets the eligibility requirements of § 1822.264.

(2) Verify that the information provided is accurate and complete.

(3) Determine that:

(i) The sites will be located in a good residential area and that essential facilities and services will be provided.

(ii) The lots will be reasonable in cost and of a type FmHA or its successor agency under Public Law 103–354 can appropriately finance.

(iii) There is an immediate and ready market for the proposed sites in the planned location.

(iv) The total number of sites planned does not exceed the number of loans the county supervisor can reasonably expect to include in the rural housing program or for which other credit is reasonably assured when the sites are developed.

(v) Proposed subdivisions will comply with the local codes and ordinances and also meet the requirements of subpart C of part 1924 of this chapter.

(4) Evaluate the manner in which the applicant plans to conduct its business and financial affairs.

(5) Comment on the background of the members, directors and officials.

(6) If he has questions about the proposal, send the incomplete docket to the State office for advice.

(7) If for any reason the loan cannot be made, inform the applicant.

(c) *Completion of the docket.* If the county supervisor determines that the applicant is eligible and the loan will be sound and proper, he should request the applicant to make any needed revisions. In addition to the items required in the application the docket must include:

(1) A plot plan and detailed preliminary plans and specifications for development of the building sites.

(2) A detailed cost breakdown of the project for such items as land and rights-of-way, utility installations or connections, on-site improvements, engineering and legal services, and estimated interest.

(3) If water and sanitary facilities are not publicly owned, a complete statement as to how they will be provided and details about their ownership and operation.

(4) Satisfactory evidence of review and approval of the proposed development by applicable State and local officials whose approval is required by State or local laws, ordinances, or regulations.

(5) Satisfactory evidence that the appropriate public bodies will accept and maintain all public facilities, including common areas, playgrounds, and tot lots, when dedicated to such bodies.

(d) *Preparation of docket forms*—(1) *Request for obligation of funds and fund analysis.* Forms FmHA or its successor agency under Public Law 103–354 1944–50, ''Multiple Family Housing Borrower/Project Characteristics,'' and FmHA or its successor agency under Public Law 103–354 1944–51, ''Multiple Family Housing Obligation-Fund Analysis,'' will be completed in accordance with the Forms Manual Insert (FMI).

(2) *County committee certification or recommendation.* County committees will not be used to review RHS loan applications.

(e) *Assembly, review and distribution of complete loan docket items.* When all items required for the complete loan docket have been furnished, they will be examined thoroughly to make sure they are properly and accurately prepared and are complete in all respects, including dates and signatures. The loan docket items will be assembled in the following order and distributed as follows:

Form No.	Name of form or document	Total No. of copies	Signed by borrower	Number for loan docket	Copy for borrower
	Application Letter and Attachments	2		1–0	1–C
FmHA or its successor agency under Public Law 103–354 1910–11	Applicant Certification, Federal Collection Policies for Consumer or Commercial Debts.	2	2–O&C	1–O	1–C
	Evidence of Legal Authority (copy or citation of specific provisions of State statutory authority).	2	1	1–0	1–C
	Proof of Organization (certified copy of Articles of Incorporation)	2	1	1–0	1–C
	Certified copy of Bylaws	2	1	1–0	1–C
	List of names and addresses of officers, directors and members	2	1	1–0	1–C
	Narrative plan and other supporting information	2	1	1–0	1–C
	Evidence of Need				
	Certified Copy of Loan Resolution	1	1	1–0	

Form No.	Name of form or document	Total No. of copies	Signed by borrower	Number for loan docket	Copy for borrower
FmHA or its successor agency under Public Law 103–354 440–4	Assurance Agreement	2	1	1–0	1–C
FmHA or its successor agency under Public Law 103–354 400–1	Equal Opportunity Agreement (when applicable)	2	1	1–0	1–C
FmHA or its successor agency under Public Law 103–354 400–3	Notice to Contractors and Applicants	3		1–C	1–C
FmHA or its successor agency under Public Law 103–354 400–6	Compliance Statement (when applicable)	3		1–C	1–C
	Survey of land given as security, plans specifications, cost estimates, and proposed manner of development.	3	1	1–0	1–C
	Operating budget (if administrative expenses are to be included in loan).	2	1	1–0	1–C
	Appraisal Report with Attachments	1		1–0	
	Preliminary Title Opinion and a Final Title Opinion or a title insurance binder and a mortgage title insurance policy.				
	Option or copy of deed, purchase contract, or other instruments of ownership.				
FmHA or its successor agency under Public Law 103–354 1944–50	Multiple Family Housing Borrower/Project Characteristics	1		[1] 1	
FmHA or its successor agency under Public Law 103–354 1944–51	Multiple Family Housing Obligation-Fund Analysis	2	2	[1] 1	1

[1] Data input to Finance Office through field office terminals.

(f) *Submission of complete docket.* The complete docket will be sent to the State office together with the District Director's comments and recommendations and a draft for a press release.

(g) *Loan approval authority and State Office action.* The State Director is authorized to approve loans in accordance with this subpart and subpart A of part 1901 of this chapter. As soon as it is evident that a loan will be approved, the State Director will complete exhibit A to subpart C of part 2015 of this chapter and submit to the FmHA or its successor agency under Public Law 103–354 Finance Office through field office terminals that information contained in Form FmHA or its successor agency under Public Law 103–354 1944–50, ''Multiple Family Housing Borrower/Project Characteristics.'' The State Director may redelegate approval authority to qualified State Office employees. When a docket or preliminary application is received in the State Office, the State Director will:

(1) Utilize the services of technicians on his staff and from other agencies in evaluating the application.

(2) Review the applicant's articles of incorporation and bylaws. If they conform to approved forms for the State as

provided in §1822.264(a)(1)(ii), the State director need not obtain a preliminary opinion from the OGC. In all other cases the State director will, and in any case may, submit the docket with any comments or questions to the OGC for a preliminary opinion as to whether the applicant and the proposed loan meet or can meet the requirements of State law and this subpart.

(3) If additional information is needed to adequately evaluate the application, return the loan docket to the District Director with any comments and recommendations for further processing.

(4) If the docket is sufficiently complete to enable the State Director to determine that the applicant is eligible and the loan would be sound and proper, issue a proposed memorandum of approval listing any specific conditions that must be met before loan closing.

(5) If the applicant is not eligible or the loan would not be sound and proper and the deficiencies cannot be corrected, inform the District Director accordingly.

(42 U.S.C. 1480; delegation of authority by the Sec. of Agr., 7 CFR 2.23; delegation of authority by the Asst. Sec. for Rural Development, 7 CFR 2.70)

[35 FR 16087, July 1, 1970, as amended at 41 FR 7487, Feb. 19, 1976; 41 FR 20392, May 18, 1976; 43 FR 24264, June 5, 1978; 44 FR 4435, Jan. 22, 1979; 50 FR 8583, Mar. 4, 1985; 52 FR 19283, May 22, 1987; 54 FR 29330, July 12, 1989]

§1822.272 Approval or disapproval of a loan.

The provisions of part 1944, subpart E of this chapter will be followed.

[56 FR 2202, Jan. 22, 1991]

§1822.273 Actions subsequent to loan approval.

After the loan is approved, actions to be taken will be in accordance with §1944.235.

[35 FR 16087, July 1, 1970, as amended at 45 FR 70777, Oct. 27, 1980]

§1822.274 Loan closing.

(a) *Applicable instructions.* The complete loan docket will be sent to the OGC for loan closing instructions. RHS loans will be closed in accordance with applicable provisions of subpart B of part 1927 of this chapter, and State Instructions which supplement this Instruction, and closing instructions of the OGC, and with the assistance of the approved attorney, representatives of the title insurance company, or local attorney, whichever is appropriate.

(b) *Mortgage.* Unless the OGC determines the Form to be inappropriate, real estate mortgage Form FmHA or its successor agency under Public Law 103–354 1927–1 (state), ''Real Estate Mortgage for _____,'' will be used for all RHS section 524 loans modified as prescribed by or with the advice of the OGC with respect to the name, address, and other identification of the borrower, the style of execution, and the acknowledgement. Additional paragraphs will be included in the mortgage to read as follows:

The borrower agrees not to discriminate in the sale of the dwelling financed under this mortgage due to a prospective purchaser's race, color, national origin, sex, religion, age, marital status, or handicap. The borrower further agrees to comply with all Federal, State, or local laws and ordinances prohibiting discrimination in the sale of housing. The borrower's failure or refusal to comply with this agreement will be a basis for the FmHA or its successor agency under Public Law 103–354 to deny future requests for participation in its rural housing programs and activities.

This instrument also secures the obligations and covenants of borrower set forth in Borrower's Loan Resolution of _____ (date), which is hereby incorporated herein by reference.

(c) *Promissory note.* Form FmHA or its successor agency under Public Law 103–354 1944–52, ''Promissory Note,'' will be used. Instructions for preparation will be in accordance with the FMI and the following:

(1) The total amount to be shown in the note will be the amount of the loan shown on Form FMHA or its successor agency under Public Law 103–354 1944–51. The note will be dated the date of the loan closing.

(2) The note will be signed in accordance with subpart B of part 1927 of this chapter and the forms manual insert for Form FmHA or its successor agency under Public Law 103–354 1944–52 (available in any FmHA or its successor agency under Public Law 103–354 office).

(3) Payments shall not be deferred.

(d) *Recorded mortgage.* When the real estate mortgage is returned by the recording official, the county supervisor will retain the original in the borrower's case folder. If the original is retained by the recording official for the county records, a conformed copy including the recording data showing the date and place of recordation and book and page number will be prepared and filed in the borrower's case folder. A copy of the mortgage will be delivered to the borrower but will be conformed only if required by State law or if it is the custom of other lenders in the area.

(e) *Date of loan closing.* An RHS loan is considered closed when the mortgage is filed of record.

[35 FR 16087, July 1, 1970, as amended at 42 FR 4408, Jan. 25, 1977; 50 FR 8584, Mar. 4, 1985; 56 FR 67472, Dec. 31, 1991]

§ 1822.275 Actions after sites are developed.

The building sites will be sold on a nonprofit basis to eligible families or organizations as described in § 1822.266(c).

(a) An option, Form FmHA or its successor agency under Public Law 103–354 440–34, ''Option to Purchase Real Property,'' will be executed. The site will be clearly identified by a land survey.

(b) The sale price of each individual site will not be more than a sufficient amount to pay a proportionate part of the RHS loan and any other actual costs of buying, developing, and selling the building site.

(c) The proceeds from sale of the building sites will be applied on the RHS loan and any prior lien or, with the prior approval of the National Office, used in a manner consistent with the purpose of the loan and the security interest of the Government. The sites will be released from the mortgage in accordance with § 1965.110 of subpart C of part 1965 of this chapter or otherwise in accordance with prior approval of the National Office.

[35 FR 16087, July 1, 1970, as amended at 51 FR 4135, Feb. 3, 1986]

§ 1822.276 Subsequent RHS loans.

A subsequent RHS loan is an RHS loan to an applicant indebted for an initial RHS loan. Subsequent RHS loans will be made on the same basis as initial RHS loans.

§ 1822.277 Complaints regarding discrimination in opportunity to buy developed sites.

Any applicant wishing to purchase a site financed by an RHS loan who believes he or she has been discriminated against because of race, color, national origin, religion, sex, handicap, or age, may file a complaint with the County Supervisor or State Director. Any such complaint will be handled in accordance with § 1944.239 of part 1944, subpart E of this chapter.

[56 FR 67472, Dec. 31, 1991]

§ 1822.278 Special requirements for RHS section 523 loans (loans to organizations providing sites for self-help housing).

Loans to organizations which will provide sites for self-help housing (RHS sec. 523 loans) will be made under the provisions of this subpart with the following exceptions:

(a) *Eligibility.* The applicant must be a nonprofit organization engaged in assisting self-help projects.

(b) *Interest.* The interest rate will be 3 percent per annum on the unpaid principal balance.

(c) *Source of funds.* These will be direct loans made from the self-help fund.

(d) *Evidence of need.* Loans to newly formed organizations will be made on the basis of the applicant's providing firm information as to the number of sites to be developed and the names of eligible bona fide prospective purchasers who are assured of available home financing. Loans to organizations currently involved in mutual self-help housing projects may be made without submitting a list of the names of prospective site purchasers. There must, however, be definite evidence that enough families are available who are eligible and who will buy the sites when they are developed.

(e) *Multiple advances.* These loans may be disbursed over a period not to exceed 18 months from the date of the first advance.

(f) *Note forms.* Form FmHA or its successor agency under Public Law 103–354 1944–52, ''Multiple Family Housing

Promissory Note,'' will be used. See § 1822.274 (c).

(g) *Mortgage.* Unless the OGC determines the Form to be inappropriate, real estate mortgage Form FmHA or its successor agency under Public Law 103–354 1927–1 (state), ''Real Estate _____ for _____ (Direct Loan),'' will be used modified as prescribed by or with the advice of the OGC with respect to the name, address, and other identification of the borrower, the style of execution, and the acknowledgement. Additional paragraphs will be included in the mortgage to read as follows:

The borrower agrees not to discriminate in the sale of the dwelling financed under this mortgage due to a prospective purchaser's race, color, national origin, sex, religion, age, marital status, or handicap. The borrower further agrees to comply with all Federal, State, or local laws and ordinances prohibiting discrimination in the sale of housing. The borrower's failure or refusal to comply with this agreement will be a basis for the FmHA or its successor agency under Public Law 103–354 to deny future requests for participation in its rural housing programs and activities.

This instrument also secures the obligations and covenants of borrower set forth in Borrower's Loan Resolution of _____ *(date),* which is hereby incorporated herein by reference.

[35 FR 16087, July 1, 1970, as amended at 42 FR 4408, Jan. 25, 1977; 50 FR 8584, Mar. 4, 1985; 56 FR 67472, Dec. 31, 1991]

§ 1822.279 Loan supervision and servicing.

Loan supervision will be provided according to subpart C of part 1930 of this chapter. Loan servicing will be provided according to subpart B of part 1965 of this chapter.

[48 FR 56139, Dec. 19, 1983]

EXHIBITS A–B TO SUBPART G TO PART 1822—[Reserved]

EXHIBIT C TO SUBPART G TO PART 1822—SUBORDINATION BY THE GOVERNMENT FOR USE WITH RURAL HOUSING SITE LOANS

Whereas, The United States of America acting through the Farmers Home Administration or its successor agency under Public Law 103–354 (hereinafter called the ''Government'') is the holder of the following-described instrument(s) executed by

of _____

County, State of _____

(hereinafter called the ''Borrower'')

Title of instrument	Date of instrument	Date filed	Office filed	Book No.	Page No.

And whereas, _____ (hereinafter called the ''Lender'') has agreed to provide a loan to the borrower or to a builder designated by the borrower to construct a home on the property described in this instrument.

Now Therefore, in consideration of the Lender's agreement to make such loan to the borrower, the Government hereby consents to the Borrower obtaining said loan from the lender, and agrees to and hereby subordinates in favor of the Lender and his successors and assigns its liens or security interests created or evidenced by the above-described instrument(s) insomuch as they cover the following described property:

Except That, The Government shall retain a first lien or security interest in the above-described property in an amount of $———. Such first lien will be released only when satisfactory evidence is provided indicating that the lot with completed home is being sold to a family eligible for assistance under any section of Title V of the Housing Act of 1949 or under any other law which provides financial assistance for housing low- and moderate-income families and that the benefits of the nonprofit development of the site are being passed on to the eligible purchaser and that the amount of that first lien is paid on the Borrower's Rural Housing Site Loan debt to the Government.

This subordination is limited to the amount actually loaned by the Lender to the Borrower for the foregoing purpose, but shall not exceed $———.

Only the above described property is affected by this subordination. This subordination shall not otherwise affect or modify the obligations secured by the aforesaid lien instrument(s), and the said obligations shall continue in force and effect until fully paid, satisfied, and discharged.

No member of Congress shall be admitted to any share or part of this agreement or to any benefit that may arise thereupon.

In Witness Whereof, The United States of America has caused these presents to be signed on the ——— day of ———, 19—, pursuant to delegated authority published in 7 CFR, Part 1800.

Witness: UNITED STATES OF AMERICA

_____ By: _____

_____ Title: _____

Farmers Home Administration or its successor agency under Public Law 103–354, U.S. Department of Agriculture.

(42 U.S.C. 1480; delegation of authority by the Secretary of Agriculture, 7 CFR 2.23; delegation of authority by the Assistant Secretary for Rural Development, 7 CFR 2.70)

[41 FR 47460, Oct. 29, 1976]

PART 1823—ASSOCIATION LOANS AND GRANTS—COMMUNITY FACILITIES, DEVELOPMENT, CONSERVATION, UTILIZATION

Subparts A–M—[Reserved]

Subpart N—Loans to Indian Tribes and Tribal Corporations

Sec.

1823.401 General.
1823.402 Definitions.
1823.403 Eligibility.
1823.404 Loan purposes.
1823.405 Ineligible loan purposes.
1823.406 Rates and terms.
1823.407 Use of acquired land.
1823.408 Special requirements.
1823.409 Security.
1823.410 Appraisals.
1823.411 Land rights.
1823.412 Loan docket.
1823.413 Loan approval.
1823.414 Title to security property.
1823.415 Supervision and servicing.
1823.416 Check request and loan closing.
1823.417 Civil rights.
1823.418 State requirements.

EXHIBIT A TO SUBPART N TO PART 1823—LOAN DOCKET ITEMS—LOANS TO INDIAN TRIBES AND TRIBAL CORPORATIONS

EXHIBIT B TO SUBPART N TO PART 1823—TRIBAL COUNCIL RESOLUTION NO. _____

EXHIBIT C TO SUBPART N TO PART 1823—ASSIGNMENT OF TRIBAL INCOME AND FUNDS

EXHIBIT D TO SUBPART N TO PART 1823—SUBORDINATION AGREEMENT

AUTHORITY: 7 U.S.C. 1989, 5 U.S.C. 301, 7 CFR 2.23, 7 CFR 2.70.

SOURCE: 35 FR 15091, Sept. 29, 1970, unless otherwise noted.

Subparts A–M—[Reserved]

Subpart N—Loans to Indian Tribes and Tribal Corporations

SOURCE: 39 FR 3662, Jan. 29, 1974, unless otherwise noted.

§ 1823.401 General.

This subpart contains policies and procedures of the Farmers Home Administration (FmHA)or its successor agency under Public Law 103–354 applicable to making initial and subsequent insured loans to Indian tribes or tribal corporations for the acquisition of land within tribal reservations and Alaskan communities. Any processing or servicing activity conducted pursuant to this subpart involving authorized assistance to FmHA or its successor agency under Public Law 103–354 employees, members of their families, known close relatives, or business or close personal associates, is subject to the provisions of subpart D of part 1900 of this chapter. Applicants for this assistance are required to identify any known relationship or association with an FmHA or its successor agency under Public Law 103–354 employee. The Secretary of the Interior or authorized representative will determine whether lands lie within a tribal reservation or community.

[39 FR 3662, Jan. 29, 1974, as amended at 51 FR 6733, Feb. 26, 1986; 58 FR 224, Jan. 5, 1993]

§ 1823.402 Definitions.

The following definitions are applicable to the subsequent provisions of this subpart.

(a) *Land.* The term ''land'' includes any or all rights or interests therein.

(b) *Tribe.* The term ''tribe'' means, an Indian Tribe recognized by the Secretary of the Interior or a tribal corporation established pursuant to the Indian Reorganization Act, and/or a community in Alaska incorporated by the Secretary of the Interior pursuant to the Indian Reorganization Act.

(c) *Tribal.* The term ''tribal'' refers to an Indian tribe or Alaskan community described in paragraph (b) of this section, and ''tribal members'' refers to the members of such a tribe or community.

(d) *Reservation.* The term ''reservation'' means the lands or interests therein within the tribe's reservation as determined by the Secretary of the Interior, or within a community in Alaska incorporated by the Secretary of the Interior pursuant to the Indian Reorganization Act.

(e) *Mortgage.* The term ''mortgage'' includes deeds of trust and other liens on land.

§1823.403 Eligibility.

To be eligible for a loan, the tribe must:

(a) Be without adequate uncommitted funds to acquire needed land within the reservation.

(b) Be unable to obtain sufficient credit elsewhere at reasonable rates and terms to finance the proposed land acquisition.

(c) Show reasonable prospects of repaying the loan as determined by:

(1) A feasible plan for the use of the tribe's land.

(2) Satisfactory evidence of financial ability to develop and operate the land.

(3) A satisfactory management and repayment plan.

§1823.404 Loan purposes.

Loan funds may be used by the tribe to:

(a) Acquire land within the reservation for use of the tribe or its members. The land acquisition may be made for purposes such as elimination of fractional heirships and rounding out farming and ranching units.

(b) Pay costs incidental to land acquisition, such as those for appraisals, title clearance, legal services, land surveys, and loan closing.

§1823.405 Ineligible loan purposes.

Loan funds may not be used for any improvement or development purposes, acquisition or repair of buildings or personal property, payment of operating costs, refinancing of debts, payment of finder's fees, or similar costs. Loans also may not be made for any purpose that will contribute to excessive erosion of highly erodible land or to the conversion of wetlands to produce an agricultural commodity, as further explained in exhibit M of subpart G of part 1940 of this chapter.

[53 FR 7332, Mar. 8, 1988]

§1823.406 Rates and terms.

Each loan will be amortized over a period not to exceed 40 years. Upon request of the applicant, the interest rate charged by FmHA or its successor agency under Public Law 103–354 will be the lower of the interest rates in effect at the time of loan approval or loan closing. If an applicant does not indicate a choice, the loan will be closed at the interest rate in effect at the time of loan approval. Interest rates are specified in exhibit B of FmHA or its successor agency under Public Law 103–354 Instruction 440.1 (available in any FmHA or its successor agency under Public Law 103–354 office) for the type assistance involved.

[39 FR 3662, Jan. 29, 1974, as amended at 51 FR 6733, Feb. 26, 1986]

§1823.407 Use of acquired land.

The land acquired with the FmHA or its successor agency under Public Law 103–354 loan may be leased or sold to tribal members for dwelling, farming, grazing, recreational, and other purposes approved by the National Office as beneficial to the tribe or its members. The plan for use of the land must have the approval of the tribal council or other authorized governing body, and should be in accordance with the recommendations of appropriate Bureau of Indian Affairs (BIA) officials. It should also be consistent with the land use in the area unless other uses are justified. The plan should make maximum use of cost sharing and technical assistance of Federal and State programs.

§1823.408 Special requirements.

(a) *Loan authorization.* The tribe will take appropriate action to authorize obtaining and giving security for the loan, using exhibit B of this subpart N, Tribal Council Resolution, as a guide.

(b) *Right to mortgage.* If a mortgage is to be obtained on trust or restricted property and the tribe's constitution or charter does not specifically authorize

a mortgage of such property, the mortgage must be authorized by tribal referendum.

(c) *Waiver of immunity.* The appropriate tribal official(s) will execute on behalf of the tribe and in favor of FmHA or its successor agency under Public Law 103–354 a waiver of any immunity from suit or liability which it possesses. The waiver will be approved by the Secretary of the Interior or his authorized representative.

(d) *Mortgages or assignments to third parties.* At the time of loan closing an agreement will be obtained form the tribe that as long as any indebtedness on the loan is outstanding it will not, without the written consent of FmHA or its successor agency under Public Law 103–354;

(1) Give assignments or pledges to other parties of income, revenue, or other property assigned or pledged to FmHA or its successor agency under Public Law 103–354.

(2) Mortgage, sell, or otherwise dispose of any land (except sales to tribal members for market value) regardless of whether it is or is not mortgaged to FmHA or its successor agency under Public Law 103–354.

(3) This agreement will be submitted to the Office of the General Counsel (OGC) for review as to content and validity. For trust lands, a copy will be forwarded to the BIA. For other than trust lands, it will be recorded in the land records if OGC advises that such recordation is legally necessary.

(e) *Land acquisition, debt service, and reserve accounts.* The following accounts will be established at the time of loan closing. A properly bonded official of the tribe will receive the monies for each account and issue receipts therefor. The bonded official will deposit all such monies in the appropriate trust or counter-signature accounts. As a basis for withdrawals, the deposit agreement for each account will require the signatures of appropriate tribal official(s) and the FmHA or its successor agency under Public Law 103–354 County Supervisor or a BIA official, depending on whether the account is a BIA trust account or an FmHA or its successor agency under Public Law 103–354 supervised account in a commercial bank.

(1) *Land acquisition account.* The loan funds will be deposited in this account which will be established as a ''Supervised Bank Account.'' If funds in this account exceed $100,000, it shall be secured by the financial institution in advance in accordance with U.S. Treasury Department Circular No. 176.

(2) *Debt service account.* A debt service account will be established at the time of loan closing for deposit of income assigned to FmHA or its successor agency under Public Law 103–354 to be used in making repayments on the loan and payments to the reserve account.

(3) *Reserve account.* This account will be established for debt service reserve purposes. On or before the first installment due date, an amount equal to one-tenth (1/10) of the amount to be paid annually on the loan will be deposited in this reserve account. An equal amount will be deposited in the account during each succeeding year until a full annual payment is accumulated.

(i) Funds in the reserve account may be used to make repayments on the loan when the tribe cannot meet the installments from other sources as they fall due. Any funds used for that purpose will be replaced as soon as possible before the next installment due date.

(ii) The reserve fund may be invested in short-term investments that are issued, guaranteed, or insured by the Federal or a State Government and name FmHA or its successor agency under Public Law 103–354 as co-owner.

[39 FR 3662, Jan. 29, 1974, as amended at 46 FR 36106, July 14, 1981]

§ 1823.409 Security.

All loans will be secured in a manner that will adequately protect the interests of FmHA or its successor agency under Public Law 103–354. Ordinarily, the security will include a lien on land acquired with loan funds plus assignment(s) of income. However, the security may consist only of assignments of income if the State Director determines that it will provide as good or better security than the land acquired with loan funds. Such security may be supplemented by security interests in personal property which is available and needed to protect the interests of

FmHA or its successor agency under Public Law 103–354.

(a) *Land plus assignments of income.* When land security is taken, it will be coupled with assignment(s) of uncommitted tribal, trust, or other income sufficient to cover loan repayments and payments to the reserve account.

(b) *Assignments of income without land security.* One or more assignments of income determined to be sufficient to cover the installment repayments plus reserve on the loan will be taken using exhibit C in this subpart N as a guide. The assignment may consist of one or more of the following:

(1) *Assignment of uncommitted income.* A general assignment of uncommitted tribal, trust, or other income, together with a BIA Subordination Agreement using exhibit D in this subpart N as a guide. A statement will be obtained from BIA on the amount of such income that will be available to cover repayments and payments to the reserve account.

(2) *Assignment of land sale or lease income.* An assignment of any net proceeds from the sale, lease, or other disposition of real estate, including minerals, timber, water, water rights, or other interests in real estate, if a real estate mortgage is not taken on such property.

(3) *Assignment of other income.* An assignment or pledge of other income or revenue.

(c) *Recordation of assignments.* Each assignment of income will be approved by BIA and recorded in the appropriate public records.

§1823.410 Appraisals.

The amount of loan funds used to acquire property will not exceed its market value as determined by FmHA or its successor agency under Public Law 103–354. Market value will be based on an appraisal made by authorized FmHA or its successor agency under Public Law 103–354 personnel, BIA appraisers or appraisers approved by the State Director. The value of any existing buildings that pass with the land will be deducted from the market value.

[43 FR 18161, Apr. 28, 1978]

§1823.411 Land rights.

Title to land acquired may, with the approval of the Secretary of the Interior or his designee, be in the name of the United States in trust for the tribe.

§1823.412 Loan docket.

The loan docket will consist of those items set forth in exhibit A. Forms and guides are available in all FmHA or its successor agency under Public Law 103–354 County Offices. Part of the docket will be prepared by the tribe with the assistance of BIA in accordance with exhibits A(1), B, C, and D of this subpart N. FmHA or its successor agency under Public Law 103–354 will provide items in exhibit A(2) of subpart N.

§1823.413 Loan approval.

State Directors are authorized to approve all loans except those in excess of $500,000 which must first be authorized by the National Office. Information to be furnished the National Office will include the completed loan docket, proposed letter of conditions to be met by the applicant, any comments of OGC, and the State Director's recommendations. The State Director will forward an executed Form FmHA or its successor agency under Public Law 103–354 440–1, ''Request for Obligations of Funds,'' to the Finance Office for each loan approved. If approval was authorized by the National Office, a copy of the memorandum authorizing approval will be attached to the Form FmHA or its successor agency under Public Law 103–354 440–3. An executed Form FmHA or its successor agency under Public Law 103–354 440–1 will be forwarded to the applicant on the same date the loan is approved, that is, on the same date it is forwarded to the Finance Office.

[39 FR 3662, Jan. 29, 1974, as amended at 41 FR 7488, Feb. 19, 1976]

§1823.414 Title to security property.

The applicant will provide evidence of title satisfactory to the FmHA or its successor agency under Public Law 103–354 for all property that will serve as security for the loan.

(a) *Real estate security.* (1) *Trust property.* The applicant will request BIA to furnish Title Status Reports to the

County Supervisor. The County Supervisor will review the reports in accordance with subpart B of part 1927 of this chapter. Form FmHA or its successor agency under Public Law 103–354 1927–13, ''Waiver of Encumbrances, Exceptions, and Reservations,'' will be used as appropriate. The County Supervisor will ask the State Director for advice if necessary.

(i) If administrative closing requirements can be met, BIA will prepare the deeds and obtain the needed signatures. The County Supervisor will supply BIA with Forms 1927–1, ''Real Estate Mortgage for (State)'', and FmHA or its successor agency under Public Law 103–354 440–22, ''Promissory Note (Association or Organization).'' BIA will insert the appropriate land descriptions.

(ii) The partly completed real estate mortgage and note will be returned to the County Supervisor. The loan check can then be ordered and the loan closed. The mortgage and note will be completed and signed, but no funds will be disbursed.

(iii) A conformed copy of the note with the original mortgage and two copies will be forwarded to BIA. They will insert a certification on the mortgage and return it to the County Supervisor. BIA will also indicate that the deeds have been recorded and the priority of the Government's lien in a continuation of the Title Status Report. However, the certification about the lien priority may be made on the old Status Report if BIA prefers this.

(iv) The certified original mortgage will then be recorded by the County Supervisor in the county where the land is located if OGC determines that such recordation is necessary. Funds can be disbursed as soon as the mortgage is recorded or the determination is made that recordation is not necessary.

(2) *Nontrust land.* Title clearance will be obtained in accordance with subpart B of part 1927 of this chapter.

(b) *Rights of way.* The applicant will be responsible for obtaining adequate, continuous, and valid rights-of-way for operation, and maintenance of its property. The following documentary evidence will be furnished FmHA or its successor agency under Public Law 103–354.

(1) A copy of the form of right-of-way instrument to be used if it differs from Form FmHA or its successor agency under Public Law 103–354 442–20, ''Right-of-Way Easement.'' Rights-of-way with restrictive provisions should be accepted only in very unusual circumstances. Whenever the form of the instrument differs from Form FHA or its successor agency under Public Law 103–354 442–20 or contains special provisions that are required by either the applicant or the grantor, copies of such instruments will be submitted to the FHA or its successor agency under Public Law 103–354 for review prior to acceptance and recording. Either specific rights-of-way containing a legal property description of a centerline description of the rights-of-way or general rights-of-way containing only a description of the tract or parcel of land affected, may be used.

(2) A certificate by a duly authorized official of the applicant that it has obtained and presently holds adequate and sufficient legal title to all rights-of-way, permits and other authorizations deemed necessary by the applicant and its attorney for an uninterrupted right-of-way for the operation and maintenance of the property. Use Form FmHA or its successor agency under Public Law 103–354 442–21, ''Right-of-Way Certificate.''

(3) An opinion by the applicant's attorney relating to the adequacy and legality of the rights-of-way covered by the right-of-way certificate. Use Form FmHA or its successor agency under Public Law 103–354 442–22, ''Opinion of Counsel Relative to Rights-of-Way,'' to the extent possible.

(c) *Lien on water rights.* When a mortgage or an assignment will be taken on water rights, the applicant's attorney will furnish a statement regarding the nature of the water rights owned such as convenance of title, appropriation and decree, application and permit, public notice of appropriation and use, and so forth.

(d) *Lien on chattel property.* When liens will be taken on chattel property, the following will be furnished:

(1) Description of the property for use in preparing security instruments.

(2) Form FmHA or its successor agency under Public Law 103–354 440–13,

''Report of Lien Search,'' or similar form prepared in accordance wiith the State requirements prescribing the use of such form for Operating loans.

(e) *Disposition of title evidence.* All title evidence other than the opinion of title, mortgage title insurance policy, and water stock certificates will be returned to the borrower when the loan has been closed. The opinion of title or title insurance policy and any water stock certificates will be retained in the borrower's county office case folder.

[39 54 3662, Jan. 29, 1974, as amended at 56 FR 67472, Dec. 31, 1991]

§ 1823.415 Supervision and servicing.

Borrowers will be supervised in accordance with subpart A of part 1942 of this chapter. Loans will be serviced in accordance with subpart E of part 1951 of this chapter. The cooperation, assistance, and advice of appropriate BIA officials will be sought at all times.

[39 FR 3662, Jan. 29, 1974, as amended at 47 FR 52119, Nov. 19, 1982; 54 FR 47196, Nov. 13, 1989]

§ 1823.416 Check request and loan closing.

Before any loan can be closed, the District Director must notify the State Director in writing that all loan closing conditions have been met. Checks will be requested and loans will be closed in accordance with subpart A of part 1942 of this chapter.

[39 FR 3662, Jan. 29, 1974, as amended at 54 FR 47196, Nov. 13, 1989]

§ 1823.417 Civil rights.

Indian tribes, for the purpose of this subpart, are not subject to title VI of the Civil Rights Act of 1964 so long as the expected use of land acquired does not include operation of a facility which would be open to the public. Therefore, such tribes are not subject to part 1816 of this chapter.

§ 1823.418 State requirements.

Each State Director will, with the assistance of OGC, supplement this Subpart with State regulations, forms, worksheets, sample documents, and such other guidance as necessary to successfully carry out the program.

EXHIBIT A TO SUBPART N TO PART 1823—LOAN DOCKET ITEMS—LOANS TO INDIAN TRIBES AND TRIBAL CORPORATIONS

(1) The tribe with the assistance of BIA will provide the following:

SF 424.1: Application for Federal Assistance (For Non-construction).

Form FmHA or its successor agency under Public Law 103–354 1910–11: Applicant Certification, Federal Collection Policies for Consumer or Commercial Debts. (O & 1C—Sign O);

Official audit report of the preceding 4 years including income and expenses;

List of tribal officers, including title and addresses and signature identifications;

Copy of tribe's constitution and bylaws or charter or other evidence of organization and rules of operation;

Legal services contract approved by BIA if a private law firm. A written statement will be provided when a BIA attorney performs the legal services.

Land Utilization Plan including:

(a) A short narrative description of why the land is being purchased, what use is to be made of it, and the annual net income expected to be derived from the land. If it has proven income record, that information should be included. If not, it should be so stated. If any development work is contemplated by the tribe, this should be explained, including assurance of the source of funds to carry out such development. If the land is to be operated by the tribe, this should be described, including assurance of availability of the necessary money to meet operating costs and method of management. If the land is to be leased, there should be a description of how it will be used and assurance that its intended use will conform to the overall land use pattern of the reservation or any variations justified; (b) Recommendation of BIA Soil Conservation Specialist.

Form FmHA or its successor agency under Public Law 103–354 440–34: Option to Purchase Real Property or similar purchase agreement containing the provisions of the option.

Form FmHA or its successor agency under Public Law 103–354 440–35: Acceptance of Option.

Form FmHA or its successor agency under Public Law 103–354 442–7: Operating Budget or Statement of Income and Expenses including income and expenses from all sources.

Resolution of Tribal Council or other governing body approving and providing for the proposed land acquisition and any actions necessary to carry it out, such authority to encumber real estate and waiver of immunity and, where legally necessary, evidence of any required tribal election or referendum. The resolution should substantially conform with Exhibit B.

Subordination Agreement by BIA using Exhibit D as a guide.

Form FmHA or its successor agency under Public Law 103–354 1942–46: Letter of Intent to Meet Loan Conditions Fidelity Bond for tribal officers authorized to handle monies.

Form FmHA or its successor agency under Public Law 103–354 1927–9: Preliminary Title Opinion, if required.

Form FmHA or its successor agency under Public Law 103–354 442–20: Right-of-Way easement, or right-of-way instrument, if appropriate.

Form FmHA or its successor agency under Public Law 103–354 442–21: Right-of-Way Certificate, if appropriate.

Form FmHA or its successor agency under Public Law 103–354 442–22: Opinion of Counsel Relative to Right-of-Way, if appropriate.

Form FmHA or its successor agency under Public Law 103–354 440–13: Report of Lien Search, if appropriate.

Form FmHA or its successor agency under Public Law 103–354 1927–10: Final Title Opinion, if required.

(2) The FmHA or its successor agency under Public Law 103–354 County Supervisor will provide the following:

Form FmHA or its successor agency under Public Law 103–354 1922–1: Appraisal Report—Farm Tract if BIA or commercial appraisers have not provided a present market appraisal.

Form FmHA or its successor agency under Public Law 103–354 1927–13: Waiver of Encumbrances, Exceptions and Reservations, if required.

Form FmHA or its successor agency under Public Law 103–354 440–2: County Committee Certification or Recommendation.

Form FmHA or its successor agency under Public Law 103–354 424–49: Project Summary (Loans to Indian Tribes and Tribal Corporations).

Form FmHA or its successor agency under Public Law 103–354 1942–14: Association Project Fund Analysis Letter of Conditions.

Form FmHA or its successor agency under Public Law 103–354 1940–1: Request for Obligation of Funds.

Form FmHA or its successor agency under Public Law 103–354 440–22: Promissory Note.

Form FmHA or its successor agency under Public Law 103–354 440–9: Supplementary Payment Agreement, if required.

Form FmHA or its successor agency under Public Law 103–354 1927–1 (State): Real Estate Mortgage.

Form FmHA or its successor agency under Public Law 103–354 402–1: Deposit Agreement, if required.

[39 FR 3662, Jan. 22, 1974, as amended at 41 FR 7488, Feb. 19, 1976; 54 FR 29330, July 12, 1989; 54 FR 47196, Nov. 13, 1989; 55 FR 13503, Apr. 11, 1990; 56 FR 67472, Dec. 31, 1991; 58 FR 44752, Aug. 25, 1993]

EXHIBIT B TO SUBPART N TO PART 1823—TRIBAL COUNCIL RESOLUTION NO. _____

A RESOLUTION OF THE TRIBAL COUNCIL OF THE _____ TRIBE AUTHORIZING AND PROVIDING FOR: (1) THE ISSUANCE OF AN INSTALLMENT PROMISSORY NOTE IN THE PRINCIPAL AMOUNT OF _____ TO FINANCE THE PURCHASE OF LAND, (2) THE GIVING OF SECURITY, (3) THE COLLECTION, HANDLING, AND DISPOSITION OF REVENUES OF THE LAND TO BE PURCHASED AND ANY OTHER LAND TO BE ENCUMBERED AS SECURITY, AND (4) RELATED ACTIONS AND MATTERS.

The _____, (hereafter referred to as ''Tribe''), is an Indian Tribe recognized by the Secretary of the Interior or is a tribal corporation established pursuant to the Indian Reorganization Act;

The Tribe wishes to acquire interests in approximately _____ acres of real estate (hereinafter called ''the land'') within its reservation or community for the use of and the improvement of the economic standing of the Tribe or its members but does not have adequate uncommitted funds for such acquisition.

A meeting of the tribal council or other governing body (hereafter called the ''Council'') with the required number of Council members present was held at _____ on the _____ day of _____, 19——, pursuant to notice thereof as required by its constitution, by-laws, corporate charter, or other organizational documents, (hereafter called the ''constitution'') to consider a plan to finance the proposed land acquisition.

The Tribe has the authority to acquire lands or interests therein.

The Tribe is authorized to mortgage or otherwise hypothecate its land either by its constitution, or by a tribal referendum whereby such mortgage or other hypothecation was approved by at least a majority of the qualified voters at an election in which at least 20 percent of those eligible voted, or under such other rules as may be prescribed by the constitution of the Secretary of the Interior.

The Secretary of the Interior or his authorized representative has approved the mortgaging or hypothecation of the land.

As shown by the minutes of said meeting, of the _____ (Number) Council members of record of the Tribe there were present and voting _____ Council Members and by a recorded majority vote, determinations were made and actions authorized as follows:

That in order to acquire the land, the Council was authorized and empowered, in its discretion, for and in the name of the Tribe, to make application to the Farmers

Home Administration or its successor agency under Public Law 103–354 of the United States Department of Agriculture (hereafter referred to as the ''Government'') for financial assistance; to cause the execution and delivery of promissory note or notes or other evidence of indebtedness and a mortgage, or other appropriate security instrument, to secure any loan or loans made, or insured, by the Government; to comply with any requirements, terms or conditions prescribed by the Government or by Government regulations; and to pay, extend or renew any such indebtedness; and to execute contracts or enter into agreements and, without limitation, to take any and all other action as may be necessary, incidental, or appropriate to finance acquisition of the land or interests therein in behalf of the Tribe.

Now therefore, it is hereby resolved by the Council of the Tribe as follows:

Section 1. (Determination of Council) It is necessary to defray all of a portion of the costs of acquiring the land or interests therein by obtaining a loan to be made or insured by the Government in accordance with applicable provisions of the Consolidated Farm and Rural Development Act and Pub. L. 91–229, it being determined that the Tribe is unable to obtain sufficient credit elsewhere to finance the acquisition taking into consideration prevailing private and cooperative rates and terms currently available.

Section 2. (Amount and Terms of Loan) The Tribe shall borrow $———— and issue as evidence thereof installment promissory note(s) in the form prescribed by the Government for the full principal amount of the loan. The note(s) shall be signed by the ———— (Appropriate Official) and attested by the ———— (Appropriate Official) and the corporate or other seal of the Tribe affixed thereto, and shall bear interest from its date, which shall be the date of loan closing, at a rate prescribed by the Government in its approval of the loan, but not to exceed ——— percent per annum. The security instruments shall be in such form and contain the terms and conditions required by the Government.

Section 3. (Pledge of Revenue) The indebtedness hereby authorized shall be payable from the gross income and revenue to be derived from the operation of the tribal land, a portion of which sufficient to pay the principal and interest as and when the same shall be come due is hereby pledged and shall be set aside for that purpose.

Section 4. (Pledge of Additional Security) If the revenue pledged in Section 3 is insufficient to pay the principal and interest as and when the same shall become due or if it appears the revenue will be insufficient, the Council hereby pledges its taxing authority and the funds held in the United States Treasury in trust for the Tribe, for the purpose of making up the deficiency or expected deficiency shall be deposited in the debt service and reserve accounts established by Sections 5 B and C hereof and used as therein prescribed.

Section 5. (Protection and Disposition of Funds) The ———— (Appropriate Official) of the Tribe shall be the custodian of all loan funds of the Tribe and all revenues pledged for the repayment of the loan. All such funds shall be deposited in accordance with Part 1902, Subpart A of this chapter. The ———— (Appropriate Official) shall execute a fidelity bond in an amount not less than $———— with a surety company approved by the Government. The United States of America shall be named as coobligee in such bond, and the amount thereof shall not be reduced without the prior written consent of the Government. The ———— (Appropriate Official) is hereby directed to establish the following accounts into which proceeds of the note, the revenues from the land, and any other income pledged for repayment shall be deposited, which accounts shall be continually maintained, except as otherwise provided, so long as the indebtedness hereby authorized remains unpaid:

A. *Land Acquisition Account.* The proceeds of the loan hereby authorized shall be deposited in the Land Acquisition Account which shall be established as a ''supervised bank account'' as required by the Government. If funds in this account exceed $100,000, it shall be secured by the financial institution in advance in accordance with U.S. Treasury Department Circular No. 176. When all land acquisition costs have been paid in full, any balance remaining in the Land Acquisition Account shall be applied as a refund on the loan and the Land Acquisition Account shall be closed.

B. *Debt Service Account.* All assigned revenues shall be deposited in the Debt Service Account until there is an amount equal to the next annual installment to become due plus any delinquencies and payments are made to the Reserve Account. The Debt Service Account will be used for making annual installment payments on the loan, payments on any delinquencies that might occur, and payments to the Reserve Account.

C. *Reserve Account.* Out of the funds in the Debt Service Account, there shall be transferred annually to the Reserve Account the sum of $———— (1/10 of an annual payment of principal and interest) until there is accumulated in that fund the sum of $ ———— (one annual installment of principal and interest), after which no further transfers need be made to said account except that transfers shall be made to replace any withdrawals. Funds in the Reserve Account shall be used only for the purpose of making payments of principal and interest in the event the amount in the Debt Service Account is insufficient to meet such payments.

Section 6. (Other Covenants and Agreements of the Tribe) The Tribe covenants and agrees that, so long as the indebtedness hereby authorized remains unpaid, the Tribe will—

A. Comply with applicable Federal, State, and Tribal laws and regulations and maintain the land in good condition.

B. Impose and collect such rates and charges that gross revenues will be sufficient at all times for the maintenance of the land and the funding of the Debt Service and Reserve Accounts.

C. Cause to be levied and collected such taxes or assessments as may be necessary to maintain the land in good condition, meet payments on the loan, and make the deposits required by Sections 5 B and C, if for any reason gross revenues are insufficient.

D. Maintain complete books and records relating to the operation and maintenance of the land and its financial affairs and will cause such books and records to be audited annually at the end of each fiscal year and an audit report prepared, and will furnish the Government without request a copy of each annual audit report. The audit will be conducted by independent Certified Public Accountants or by licensed Public Accountants, licensed before December 31, 1970, who are certified or licensed by a regulatory authority of a state or other political subdivision of the United States. At all reasonable times, the Government shall have the right to inspect the land and to inspect and copy the records, accounts, and data of the Tribe relating thereto.

E. Maintain such insurance coverage as may be required by the Government.

F. Not borrow any money from any source or enter into any contract or agreement or incur any other liabilities in connection with making improvements to the land (exclusive of normal maintenance) without obtaining the prior written consent of the Government.

G. Not cause or permit any voluntary dissolution of its organization; merge or consolidate with any other organization; dispose of, transfer, or convey its title to any land or any part thereof or interest therein, by sale, mortgage, lease or other encumbrance, without obtaining the prior written consent of the Government.

H. Not modify or amend its constitution in any way that would affect the Government's security without the written consent of the Government.

Section 7. (Security Instruments) In order to secure the payment of the principal and interest or the note and any related obligations of the Tribe to the Government the _____ (Appropriate Official) and _____(Appropriate Official) of the Tribe are hereby authorized and directed to execute and deliver a good and sufficient security instrument encumbering the land or other property and an assignment of revenues and funds held in the United States Treasury for the Tribe. The security instrument shall give the Government the lien on the land, Tribal revenues, Tribal Treasury funds or other property and said officials are authorized and directed to acquire such subordination agreements as are necessary to achieve the required priority.

Section 8. (Refinancing) If at any time it shall appear to the Government that the Tribe is able to refinance the loan, in whole or in part, by obtaining a loan for such purposes from responsible cooperative or private credit sources, at reasonable rates and terms for loans for similar purposes and periods of time, the Tribe will, upon request of the Government, apply for and accept such loan in sufficient amount to repay the Government and will take such action as may be required in connection with such refinancing loan.

Section 9. (Waiver of Immunity) In order to secure the payment of the principal and interest of the note and any related obligations, the Tribe hereby waives for the benefit of the Government any immunity from suit or liability which it may possess except that this waiver shall not extend to the acquiring of any judgment, lien, or attachment upon the property of the Tribe other than property of the Tribe other than property specifically pledged, assigned, or mortgaged to the Government in connection with this loan provided that if no real estate is mortgaged to the Government this waiver shall extend to acquiring of judgment, lien or attachment on real estate purchased with the loan herein authorized.

Section 10. (Resolution a Contract) The provisions of this resolution shall constitute a contract between the Tribe and the Government so long as the loan made or insured by the Government remains unpaid.

Section 11. This resolution shall take effect and be in force immediately.

The vote was:

YEAS: _____

NAYS: _____

ABSENT: _____

Date _____

_____

(Appropriate official)

_____

(Appropriate official)

CERTIFICATION

I, the undersigned, as _____ (Appropriate Official) of the _____ hereby certify that the Tribal Council or such Tribe is composed of ____ members, of whom ____ (constituting a quorem) were present at a meeting thereof duly called and held on the ____ day of _____, 19 ____: that the foregoing resolution was adopted at such meeting by the affirmative vote of ____

members of such Council and that said resolution has not been rescinded or amended in any way.

Dated this ——— day of ————, 19 ———.

Secretary of ————————————————

[39 FR 3662, Jan. 22, 1974, as amended at 46 FR 36106, July 14, 1981]

EXHIBIT C TO SUBPART N TO PART 1823—ASSIGNMENT OF TRIBAL INCOME AND FUNDS

Whereas, the United States of America, acting through the Farmers Home Administration or its successor agency under Public Law 103–354, United States Department of Agriculture (hereinafter called the ''FmHA or its successor agency under Public Law 103–354'') is the holder or insurer of a promissory note (hereinafter called the ''Note'') in the sum of ———————— bearing interest at the rate of ————— percent per annum; and

Whereas, ther Note was given by ———————— (hereinafter called the ''Tribe'') to evidence the indebtedness incurred by the Tribe under a loan (hereinafter call the ''Loan'' made or insured by the FmHA or its successor agency under Public Law 103–354, and

Whereas, Tribal Council Resolution No. ————— dated ————————, authorized the acceptance of the Loan and the issuance of the Note and pledged and assigned income and funds as security for the payment thereof; and

Whereas, the Tribe has entered into a subordination agreement with the United States Department of the Interior, Bureau of Indian Affairs (hereinafter called the BIA), whereby the General Assignment of Income dated ———————— and an Assignment of Income dated ———————— in favor of the BIA is fully subordinated to the Assignment made herein;

Now, therefore, in consideration of the FmHA or its successor agency under Public Law 103–354's making or insuring the Loan and to secure the payment when due of the installments on the Note, the Tribe does hereby grant, convey, pledge and assign to the FmHA or its successor agency under Public Law 103–354 (1) all annual gross income from the land purchased with the loan, and (2) all annual gross income from other sources. If the Tribe shall pay the entire principal of and interest on the Note, this Assignment shall terminate and be of no further force and effect.

In Witness Whereof, the ————————Tribe of the ———————— Reservation causes this Assignment to be executed by its President and its Tribal seal to be affixed and duly attested.

(Seal) ———————— Tribe of the ————————Reservation.

Attest: By ————————————————

(Appropriate Official)

Date ————————

The terms and conditions of the foregoing Assignment are hereby agreed to as of the date hereof.

BUREAU OF INDIAN AFFAIRS

U.S. DEPARTMENT OF THE INTERIOR

By ————————————————

Title ————————————————

EXHIBIT D TO SUBPART N TO PART 1823—SUBORDINATION AGREEMENT

This Agreement, dated ————————, between the United States of America, Department of the Interior (hereinafter called the ''BIA'', and the ———————— tribe of the ———————— Reservation (hereinafter called the ''Tribe''), for the benefit of the Tribe and to induce the United States of America, acting through the Farmers Home Administration or its successor agency under Public Law 103–354, United States Department of Agriculture (hereinafter called the ''FmHA or its successor agency under Public Law 103–354''), to make or insure a loan to the Tribe:

Witnesseth:

Whereas, under date of ————————, the Tribe executed and delivered to the BIA a ''General Assignment and Assignment of Income'' (hereinafter called the ''General Assignment''), a copy of which is attached hereto and marked Exhibit A; and under date of ———————— an ''Assignment of Specific Income'' a copy of which is attached hereto and marked Exhibit B, and Whereas, the FmHA or its successor agency under Public Law 103–354 has offered to loan or insure a loan to the Tribe in the sum of ——— for the purpose of paying part or all of the cost of acquiring interests in approximately ——— acres of real estate within its reservation pursuant to the provisions of the Act of April 11, 1970, Pub. L. 91–229; and

Whereas, FmHA or its successor agency under Public Law 103–354 requires that the annual gross income from the real estate purchased with the loan and the annual gross income from all other sources in such amount as may be necessary to pay debt service on such loan be pledged to pay the principal and interest on the loan; and

Whereas, the BIA is willing to subordinate to FmHA or its successor agency under Public Law 103–354 as security for said loan its rights under the General Assignment and under the Assignment of Specific Income to a lien on the income of the Tribe from all sources;

Now, Therefore, the BIA does agree as follows:

1. That the right it has under the General Assignment and under the Assignment of Specific Income as referred to in the first WHEREAS above, or any other instrument not mentioned herein to receive the income derived by the Tribe from all sources shall be in all respects subordinate, subject to and junior in right to the right of FmHA or its successor agency under Public Law 103–354 in and to said income as said rights are created and defined in the Assignment Pledge Agreements, or other agreements now or hereafter given resulting from the loan from the Farmers Home Administration or its successor agency under Public Law 103–354 to the Tribe.

2. That this subordination Agreement shall be effective as of the date hereof.

Dated this _____ day of _____, 19——.

_____ Tribe of the
_____ Reservation
By _____

UNITED STATES OF AMERICA

DEPARTMENT OF THE INTERIOR

By _____
Title _____

SUBCHAPTERS C–D—[RESERVED]
SUBCHAPTER E—ACCOUNT SERVICING

PARTS 1863–1866—[RESERVED]

SUBCHAPTER F—SECURITY SERVICING AND LIQUIDATIONS

PART 1872—[RESERVED]

SUBCHAPTER G—MISCELLANEOUS REGULATIONS

PARTS 1890–1899—[RESERVED]

FINDING AIDS

A list of CFR titles, subtitles, chapters, subchapters and parts and an alphabetical list of agencies publishing in the CFR are included in the CFR Index and Finding Aids volume to the Code of Federal Regulations which is published separately and revised annually.

Material Approved for Incorporation by Reference
Table of CFR Titles and Chapters
Alphabetical List of Agencies Appearing in the CFR
Redesignation Tables
List of CFR Sections Affected

Material Approved for Incorporation by Reference

(Revised as of January 1, 1998)

The Director of the Federal Register has approved under 5 U.S.C. 552(a) and 1 CFR Part 51 the incorporation by reference of the following publications. This list contains only those incorporations by reference effective as of the revision date of this volume. Incorporations by reference found within a regulation are effective upon the effective date of that regulation. For more information on incorporation by reference, see the preliminary pages of this volume.

7 CFR (PARTS 1600–1899)

RURAL UTILITIES SERVICE, DEPARTMENT OF AGRICULTURE

Copies of Bulletins may be obtained upon request in person or by mail from the Administrative Services Division, Room 0175–S, Washington, DC 20250. Bulletins 50–1 through 50–5 and 50–18 and 345–150 may be purchased from the Superintendent of Documents, U.S. Government Printing Office, Washington, DC 20402. Telephone: 202–512–1800.

	7 CFR
Rural Utilities Service	
50–1 (T–805–B) Electric Transmission Specifications and Drawings for 115 kV to 230 kV 10/88.	1728.97
50–2 (T–805–A) Electric Transmission Specifications and Drawings for 34.5 kV to 69 kV 2/73.	1728.97
50–3 (D–804) Specifications and Drawings for 12.5/7.2 kV Line Construction 5/83.	1728.97
50–5 (D–803) Specifications and Drawings for 14.4/24.9 kV Line Construction 9/69.	1728.97
50–6 (D–806) Specifications and Drawings for Underground Electric Distribution 3/90.	1728.97
50–15 (DT–3) REA Specifications for Pole Top Pins with 1/38″ Diameter Lead Threat 1/51.	1728.97
50–16 (DT–4), REA Specifications for Angle Suspension Brackets 3/52.	1728.97
1728F–700 REA Specifications for Wood Poles, Stubs and Anchor Logs 7/93.	1728.97
50–19 (DT–7) REA Specifications for Clevis Bolts 8/53	1728.97
50–23 (DT–18) REA Specifications for 60″ Wood Crossarm Braces 2/71.	1728.97
50–31 (D–3) REA Specifications for Pole Top Pins with 1″ Diameter Lead Threads 2/79.	1728.97
50–32 (D–4) REA Specifications for Steel Crossarm Mounted Pins with 1″ Diameter Lead Threads 10/50.	1728.97
50–33 (D–5) REA Specifications for Single and Double Upset Spool Bolts 2/51.	1728.97
50–34 (D–6) REA Specifications for Secondary Swinging Clevises 12/70.	1728.97
50–35 (D–7) REA Specifications for Service Swinging Clevises 9/52.	1728.97
50–36 (D–8) REA Specifications for Service Deadend Clevises 9/52.	1728.97

7 CFR (PARTS 1600–1899)—Continued

RURAL UTILITIES SERVICE, DEPARTMENT OF AGRICULTURE—Continued

	7 CFR
50–40 (D–14) REA Specifications for Pole Top Brackets for Channel Type Pins 9/51.	1728.97
50–41 (D–15) REA Specifications for Service Wireholders 11/51	1728.97
50–55 (T–2) REA Specifications for Overhead Ground Wire Support Brackets 5/53.	1728.97
50–56 (T–3) REA Specifications for Steel Plate Anchors for Transmission Lines 12/53.	1728.97
50–60 (T–9) REA Specifications—Single Pole Steel Structures, Complete with Arms 12/71.	1728.97
50–70 (U–1) REA Specifications for 15 kV and 25 kV Primary Underground Power Cable 12/87.	1728.97
50–72 (U–4) REA Specifications for Electrical Equipment Enclosures (5–35 kV) 10/79.	1728.97
50–73 (U–5) REA Specifications for Pad-Mounted Transformers (Single and Three-Phase) 1/77.	1728.97
50–74 (U–6) REA Specifications for Secondary Pedestals (600 Volts and Below) 10/79.	1728.97
50–91 (S–3) REA Specifications for Step-Down Distribution Substation Transformers (34.4–138 kV) 1/78.	1728.97
345–6 REA Standard for Splicing Plastic-insulated Cables (PC–2) 1/78.	1755.97
345–13 REA Specifications for Aerial and Underground Telephone Cable (PE–22) 1/83.	1755.97
345–22 REA Specifications for Voice Frequency Loading Coils (PE–26) 1/89.	1755.97
345–29 REA Specifications for Self-supporting Cable (PE–38) 2/82	1755.97
345–39 REA Specifications for Telephone Station Protectors 3/83	1755.97
345–50 REA Specifications for Trunk Carrier Systems (PE–60) 9/79.	1755.97; 1755.397; 1755.522
345–52 REA Standard for Service Entrance and Station Protector Installations (PC–5A) 1/80.	1755.97
345–52 REA Standard for Station Installations (PC–5B) 4/81	1755.97
345–54 REA Specifications for Telephone Cable Splicing Connectors (PE–52) 12/71.	1755.97
345–55 REA Specifications for Central Office Loop Extenders and Loop Extender Voice Frequency Repeater Combinations (PE–61) 12/73.	1755.97
345–55 REA Specifications for Central Office Loop Extenders and Loop Extender Voice Frequency Repeater Combinations (PE–61) 12/73.	1755.522
345–63 REA Standard for Acceptance Tests and Measurements of Telephone Plant (PC–4) 5/76.	1755.97
345–65 REA Specifications for Cable Shield Bonding Connectors (PE–33) 6/78.	1755.97
345–66 REA Specifications for Subscriber Carrier Systems (PE–64) 9/79.	1755.97
345–67 REA Specifications for Filled Telephone Cables (PE–39) 11/81.	1755.97
345–69 REA Specifications for Two-wire Voice Frequency Repeater Equipment (PE–29) 1/78.	1755.97
345–72 REA Specifications for Filled Splice Cases (PE–74) 1/76	1755.97
345–75 REA Specifications for Electronic Trunk Circuits (PE–65) 1/77.	1755.97

7 CFR (PARTS 1600–1899)—Continued

RURAL UTILITIES SERVICE, DEPARTMENT OF AGRICULTURE—Continued

	7 CFR
345–78 REA Specifications for Carbon Arrester Assemblies for Use in Protectors (PE–78) 2/80.	1755.97
345–150 REA Specifications and Drawings for Construction of Direct Buried Plant (Form 515a) 7/89.	1755.97
345–151 REA Specifications and Drawings for Conduit and Manhole Construction (Form 515c) 7/89.	1755.97
345–152 REA Specifications and Drawings for Underground Cable Installation (Form 515d) 7/89.	1755.97
345–153 REA Specifications and Drawings for Construction of Pole Lines, Aerial Cables and Wires (Form 515f) 7/89.	1755.97
345–154 REA Specifications and Drawings for Service Entrance and Station Protector Installations (Form 515g) 7/89.	1755.97
345–168 REA Specifications for Equipment for Direct Distance Dialing (Form 538) 10/77.	1755.97
345–180 REA Specifications for Voice Frequency Repeaters and Voice Frequency Repeatered Trunks (Form 397a) 1/63.	1755.97
345–183 REA Design Specifications for Point-to-point Microwave Radio Systems (Form 397d) 6/70.	1755.97
345–184 REA Design Specifications for Mobile and Fixed Dial Radio Telephone Equipment (Form 397e) 5/71.	1755.97
Raptor Research Foundation	
c/o Department of Veterinary Biology, University of Minnesota, St. Paul, Minnesota 55101	
Suggested Practices for Raptor Protection on Power Lines, Raptor Research Report No. 4 (1981).	1724.45
American Institute of Timber Construction (AITC)	
333 West Hampden Avenue, Englewood, Colorado 80110, Telephone: (303) 761–3212	
American Institute of Timber Construction—200–83, Inspection Manual, 1987 edition.	1728.201; 1728.202
American National Standards Institute/American Institute of Timber Construction—ANSI/AITC A190.1–1983, American National Standard for Wood Products—Structural Glued Laminated Timber.	1728.202
American National Standards Institute/Electronic Industries Association (ANSI/EIA).	
Copies made available through Global Engineering Documents, 15 Inverness Way East, Englewood, CO 80112	
ANSI/EIA 359–A–84, EIA Standard Colors for Color Identification and Coding.	1755.860; 1755.870
American National Standards Institute/Institute of Electrical and Electronics Engineers, Inc. (ANSI/IEEE)	
IEEE Service Center, 445 Hoes Lane, Piscataway, NJ 08855, Telephone: 1–800–678–4333	
1993 National Electrical Safety Code	1755.900(a)(6); (o)(2)
ANSI/IEEE Std 743-1984, IEEE Standard Methods and Equipment for Measuring the Transmission Characteristics of Analog Voice Frequency Circuits.	1755.405
American National Standard Institute/Insulated Cable Engineers Association, Inc. (ICEA)	
ICEA, P.O. Box 440, South Yarmouth, MA 02664, Telephone: 508–394–4424	
ANSI/ICEA S84–608–1988 Standard for Telecommunications Cable, Filled, Polyolefin Insulated, Copper Conductor Technical Requirements.	1755.390; 1755.890

7 CFR (PARTS 1600–1899)—Continued

RURAL UTILITIES SERVICE, DEPARTMENT OF AGRICULTURE—Continued

	7 CFR
ANSI/ICEA S–89–648–1993, Standard for Telecommunications Aerial Service Wire, Technical Requirements (Approved by ANSI July 11, 1994).	1755.702; 1755.703; 1755.704
American National Standards Institute/National Fire Protection Association (ANSI/NFPA)	
Copies are available from NFPA, 1 Batterymarch Park, Quincy, Massachusetts 02269-9101 Telephone: (617) 770–3000 FAX: (617) 770–3500	
NFPA 70–1993, National Electrical Code	1755.870
American National Standards Institute	
11 West 42nd Street, New York, NY 10036 Telephone: (212) 642–4900	
ANSI 05.1983 Standard for Wood Products Structural Glued Laminated Timber for Utility Structures.	1728.201; 1728.202
ANSI S1.4–1983, Specification for Sound Level Meters, including Amendment S1.4A–1985.	1755.397; 1755.522
ANSI T1.506–1990, Telecommunications–Network Performance–Transmission Specifications for Switched Exchange Access Network, including supplement ANSI T1.506–1992.	1755.405
American Society for Testing and Materials	
100 Barr Harbor Drive, West Conshohocken, PA 19428-2959, Telephone (610) 832-9585, FAX (610) 832-9555	
ASTM A 109–91, Standard Specification for Steel, Strip, Carbon, Cold-Rolled.	1755.910
ASTM A 153–82 (Reapproved 1987), Standard Specification for Zinc Coating (Hot-Dip) on Iron and Steel Hardware.	1755.910
ASTM A 366/A 366M–91, Standard Specification for Steel, Sheet, Carbon, Cold-Rolled, Commercial Quality.	1755.910
ASTM A 475–78 Specification for Zinc-Coated Steel Wire Strand	1772.370
ASTM A 505–87 Standard Specification for Steel, Sheet and Strip, Alloy, Hot-Rolled and Cold-Rolled, General Requirements for.	1755.390; 1755.860; 1755.890
ASTM A 525–91b, Standard Specification for General Requirements for Steel Sheet, Zinc-Coated (Galvanized) by the Hot-Dip Process.	1755.910
ASTM A 526/A 526/M–90, Standard Specification for Steel Sheet, Zinc-Coated (Galvanized) by the Hot-Dip process, Commercial Quality.	1755.910
ASTM A 569/A 569M–91a, Standard Specification for Steel, Carbon (0.15 Maximum, Percent), Hot-Rolled Sheet and Strip Commercial Quality.	1755.910
ASTM A 621/A 621M–92, Standard Specification for Steel, Sheet and Strip, Carbon, Hot-Rolled, Drawing Quality.	1755.910
ASTM A 640–91, Standard Specification for Zinc-Coated Steel Strand for Messenger Support of Figure 8 Cable.	1755.900(a)(7); (1)(2); (1)(2)(ii); (1)(2)(iii)
ASTM B 3–90, Standard Specification for Soft or Annealed Copper Wire.	1755.860
ASTM B 33–91, Standard Specification for Tinned Soft or Annealed Copper Wire for Electrical Purposes.	1755.397; 1755.522; 1755.870
ASTM B 117–90, Standard Test Method of Salt Spray (Fog) Testing	1755.910
ASTM B 193–87 Standard Test Method for Resistivity of Electrical Conductor Materials.	1755.390; 1755.860; 1755.890
ASTM B 244–80 Standard Classification of Coppers	1755.390; 1755.860; 1755.890

Material Approved for Incorporation by Reference

7 CFR (PARTS 1600–1899)—Continued

RURAL UTILITIES SERVICE, DEPARTMENT OF AGRICULTURE—Continued

	7 CFR
ASTM B 539–90, Standard Test Methods for Measuring Contact Resistance of Electrical Connections (Static Contacts).	1755.910
ASTM B 633–85, Standard Specification for Electrodeposited Coatings of Zinc on Iron and Steel.	1755.910
ASTM B 694–86 Standard Specification for Copper, Copper Alloy, and Copper-Clad Stainless Steel Sheet and Strip for Electrical Cable Shielding.	1755.390; 1755.860; 1755.890
ASTM B 736–92a, Standard Specification for Aluminum, Aluminum Alloy, and Aluminum-Clad Steel Cable Shielding Stock.	1755.900(a)(7); (k)(8); 1755.870
ASTM D9–87 (Reapproved 1992), Standard Terminology Relating to Wood.	1728.201; 1728.202
ASTM D 150–87, Standard Test Methods for A–C Loss Characteristics and Permitivity (Dielectric Constant) of Solid Electrical Insulating Materials.	1755.868
ASTM D 257–91, Standard Test Methods for D–C Resistance of Conductance of Insulating Materials.	1755.860
ASTM D 523–89, Standard Test Method for Specular Gloss	1755.910
ASTM D 610–85 (Reapproved 1989), Standard Test Method for Evaluating Degree of Rusting on Painted Steel Surfaces.	1755.910
ASTM D 822–89, Standard Practice for Conducting Tests on Paint and Related Coatings and materials using Filtered Open-Flame Carbon-Arc Light and Water Exposure Apparatus.	1755.910
ASTM D 1238–90b, Standard Test Method for Flow Rates of Thermoplastics by Extrusion Plastometer.	1755.860; 1755.900(a)(7); (m)(5)(i)
ASTM D 1248–84 (1989), Standard Specification for Polyethylene Plastics Molding and Extrusion Materials.	1755.860; 1755.870; 1755.900 (a)(7); (m)(3)(i); (m)(3)(ii); (m)(3)(iii); (m)(3)(iv); (m)(3)(v)
ASTM D 1535–89, Standard Test Method for Specifying Color by the Munsell System.	1755.860; 1755.870; 1755.900(a)(7); (d)(2); 1755.910
ASTM D 1654–92, Standard Test Method for Evaluation of Painted or Coated Specimens Subjected to Corrosive Environments.	1755.910
ASTM D 1693–70 (Reapproved 1988), Standard Test Method for Environmental Stress-Cracking of Ethylene Plastics.	1755.910
ASTM D 2197–86 (Reapproved 1991), Standard Test Method for Adhesion of Organic Coatings by Scrape Adhesion.	1755.910
ASTM D 2247–92, Standard Practice for Testing Water Resistance of Coatings in 100% Relative Humidity.	1755.910
ASTM D 2287–81 (Reapproved 1988), Standard Specification for Nonrigid Vinyl Chloride Polymer and Copolymer Molding and Extrusion Compounds.	1755.870
ASTM D 2436–85, Standard Specification for Forced-Convection Laboratory Ovens for Electrical Insulation.	1755.870
ASTM D 2565–92, Standard Practice for Operating Xenon Arc-Type Light-Exposure Apparatus With and Without Water for Exposure of Plastics.	1755.910
ASTM D 2633–82 (Reapproved 1989), Standard Methods of Testing Thermoplastic Insulations and Jackets for Wire and Cable.	1755.870

7 CFR (PARTS 1600–1899)—Continued

RURAL UTILITIES SERVICE, DEPARTMENT OF AGRICULTURE—Continued

	7 CFR
ASTM D 2794–92, Standard Test Method for Resistance of Organic Coatings to the Effects of Rapid Deformation (Impact).	1755.910
ASTM D 3349–86, Standard Test Method for Absorption Coefficient of Carbon Black Pigmented Ethylene Plastic.	1755.860; 1755.900(a)(7); (m)(3)(vii)
ASTM D 3928–89, Standard Test Method for Evaluation of Gloss or Sheen Uniformity.	1755.910
ASTM D 4101–82 (1988), Standard Specification for Propylene Plastic Injection and Extrusion Materials.	1755.860; 1755.870
ASTM D 4565–90a, Standard Test Methods for Physical and Environmental Performance Properties of Insulations and Jackets for Telecommunications Wire and Cable.	1755.390; 1755.860; 1755.870; 1755.890; 1755.900(a)(7); (c)(6)(i); (k)(10); (m)(5)(iii); (m)(5)(v); App. A
ASTM D 4566–90, Standard Test Methods for Electrical Performance Properties of Insulations and Jackets for Telecommunications Wire and Cable.	1755.390; 1755.860; 1755.870; 1755.890; 1755.900(a)(7); (s)(5)
ASTM D 4568–86, Standard Test Methods for Evaluating Compatibility between Cable Filling and Flooding Compounds and Polyolefin Cable Materials.	1755.860; 1755.900(a)(7); (g)(3); (j)(2); (k)(9)
ASTM D 4872–88, Standard Test Method for Dielectric Testing of Wire and Cable Filling Compounds.	1755.860
ASTM E 8–91, Standard Test Methods of Tension Testing of Metallic Materials; and.	1755.860
ASTM E 29–90, Standard Practice for Using Significant Digits in Test Data to Determine Conformance with Specifications.	1755.860; 1755.870; 1755.900(a)(7); (t)(2)
ASTM G 21–90, Standard Practice for Determining Resistance of Synthetic Polymeric Materials to Fungi.	1755.910
ASTM G 23–90, Standard Practice for Operating Light-Exposure Apparatus (Carbon-Arc Type) With and Without Water for Exposure of Nonmetallic Materials.	1755.910
American Wood Preservers' Association (AWPA) P.O. Box 286, Woodstock, Maryland 21163–0286	
American Wood Preservers' Association—Book of Standards, 1991 edition:.	1728.201; 1728.202
A1–91, Standard Methods for Analysis of Creosote and Oil-Type Preservatives	
A2–91, Standard Methods for Analysis of Waterborne Preservatives and Fire-Retardant Formulations	
A3–91, Standard Methods for Determining Penetration of Preservatives and Fire Retardants	
A5–91, Standard Methods for Analysis of Oil-Borne Preservatives	
A6–89, Method for the Determination of Oil-Type Preservatives and Water in Wood	
A7–75, Standard Wet Ashing Procedure for Preparing Wood for Chemical Analysis	
A9–90, Standard Method for Analysis of Treated Wood and Treating Solutions by X-Ray Spectroscopy	

7 CFR (PARTS 1600–1899)—Continued

RURAL UTILITIES SERVICE, DEPARTMENT OF AGRICULTURE—Continued

	7 CFR
A11–83, Standard Method for Analysis of Treated Wood and Treating Solutions by Atomic Absorption Spectroscopy	
C1–91, All Timber Products—Preservative Treatment by Pressure Processes	
C4–91, Poles—Preservative Treatment by Pressure Processes	
C8–91, Western Red Cedar and Alaska Yellow Cedar Poles—Preservative Treatment by the Full-Length Thermal Process	
C10–91, Lodgepole Pine Poles—Preservative Treatment by the Full-Length Thermal Process	
C12–90, Western Larch Poles—Full-Length Preservative Treatment by Thermal Process	
M1–90, Standard for the Purchase of Treated Wood Products	
M2–91, Standard for Inspection of Treated Timber Products	
M3–81, Standard Quality Control Procedures for Wood Preserving Plants	
M4–91, Standard for the Care of Preservative-Treated Wood Products	
P1/P13–91, Standard for Coal Tar Creosote for Land and, Fresh Water and Marine (Coastal Water Use)	
P5–91, Standards for Waterbone Preservatives	
P8–91, Standards for Oil-Borne Preservatives	
P9–91, Standards for Solvents and Formulations for Organic Preservative Systems	
Bell Communications Research (Bellcore)	
Bellcore Customer Service, 60 New England Ave., Piscataway, NJ 08855, Telephone: 1–800–521–2673	
Document SR–TSV–002275, BOC Notes on the LEC Networks—1990, Issue 1, March 1993.	1755.522
Document TR–TSY–000508, Automatic Message Accounting, Section 8.1, Issue 2, July 1987.	1755.522
Document TR–TSY–000008, Issue 2, August 1987, Digital Interface between the SLC 96 Digital Loop Carrier System and a Local Digital Switch.	1755.397
Document TR–TSY–000057, Issue 1, April 1987, including Revision 1, November 1988, Funcational Criteria for Digital Loop Carrier Systems.	1755.397
Document TR–NWT–000303, Issue 2, December 1992, including Revision 1, December 1993, Integrated Digital Loop Carrier System Generic Requirements, Objectives, and Interface.	1755.397
Electronic Industries Association and/or Telecommunications Industries Association (EIA/TIA)	
Global Engineering Documents, 15 Inverness Way East, Englewood, CO 80112, Telephone: 303–792–2181	
EIA 455–20, Measurement of Change in Optical Transmittance	1755.900(a)(8); (q)(1)(iii)(B)
EIA/TIA 455–25A, Repeated Impact Testing of Fiber Optic Cables and Cable Assemblies.	1755.900(a)(9); (q)(2)(iii)
EIA/TIA 455–30B, Frequency Domain Measurement of Multimode Optical Fiber Information Transmission Capacity.	1755.900(a)(9); (p)(2)(vi)
EIA/TIA 455-31B, Fiber Tensile Proof Test Method	1755.900(a)(9); (b)(10)
EIA/TIA 455–37A, Low or High Temperature Bend Test for Fiber Optic Cable.	1755.900(a)(9); (q)(1)(iii)

7 CFR (PARTS 1600–1899)—Continued

RURAL UTILITIES SERVICE, DEPARTMENT OF AGRICULTURE—Continued

	7 CFR
EIA 455–41, Compressive Loading Resistance of Fiber Optic Cables	1755.900(a)(8); (q)(3)(iii)
EIA/TIA 455–45B, Method for Measuring Optical Fiber Geometry Using a Laboratory Microscope.	1755.900(a)(9); (b)(5); (b)(7); (b)(8)(i)
EIA/TIA 455–46A, Spectral Attenuation Measurement for Long-Length, Graded-Index Optical Fibers.	1755.900(a)(9); (p)(2)(i)(A);
EIA/TIA 455–48B, Measurement of Optical Fiber Cladding Diameter Using Laser-Based Instruments.	1755.900(a)(9); (b)(8)(iii)
EIA/TIA 455–51A, Pulse Distortion Measurement of Multimode Glass Optical Fiber Information Transmission Capacity.	1755.900(a)(9); (p)(2)(vi)
EIA/TIA 455–53A, Attenuation by Substitution Measurement for Multimode Graded-Index Optical Fibers or Fiber Assemblies Used in Long Length Communications Systems.	1755.900(a)(9); (p)(2)(i)(B)
EIA/TIA 455–55B, End-View Methods for Measuring Coating and Buffer Geometry of Optical Fibers.	1755.900(a)(9); (b)(12)
EIA/TIA 455–58A, Core Diameter Measurement of Graded-Index Optical Fibers.	1755.900(a)(9); (b)(6)
EIA/TIA 455–59, Measurement of Fiber Point Defects Using an OTDR	1755.900(a)(9); (p)(1)(iii); (p)(2)(ii)
EIA/TIA 455–61, Measurement of Fiber or Cable Attenuation Using an OTDR.	1755.900(a)(9); (p)(1)(i)(B); (p)(2)(i)(C)
EIA/TIA 455–78A, Spectral-Attenuation Cutback Measurement for Single-Mode Optical Fibers.	1755.900(a)(9); (p)(1)(i)(A)
EIA/TIA 455–81A, Compound Flow (Drip) Test for Filled Fiber Optic Cable.	1755.900(a)(9); (q)(7)(i)
EIA/TIA 455–82B, Fluid Penetration Test for Fluid-Blocked Fiber Optic Cable.	1755.900(a)(9); (q)(6)(i)
EIA/TIA 455–85A, Fiber Optic Cable Twist Test	1755.900(a)(9); (q)(4)(iii)
EIA/TIA 455–86, Fiber Optic Cable Jacket Shrinkage	1755.900(a)(8); (m)(5)(iv)
EIA/TIA 455–89A, Fiber Optic Cable Jacket Elongation and Tensile Strength.	1755.900(a)(8); (m)(5)(ii)
EIA/TIA 455–104A, Fiber Optic Cable Cyclic Flexing Test	1755.900(a)(9); (q)(5)(iii)
EIA/TIA 455–164A, Single-Mode Fiber, Measurement of Mode Field Diameter by Far-Field Scanning.	1755.900(a)(9); (b)(3)(i)
EIA/TIA 455–165A, Mode Field Diameter Measurement by Near-Field Scanning echnique.	1755.900(a)(9); (b)(3)(ii)
EIA/TIA 455–167A, Mode Field Diameter, Variable Aperture in the Far Field.	1755.900(a)(9); (b)(3)(iii)
EIA/TIA 455–168A, Chromatic Dispersion Measurement of Multimode Graded-Index and Single-Mode Optical Fibers by Spectral Group Delay Measurement in the Time Domain.	1755.900(a)(9); (p)(1)(vi)(A)
EIA/TIA 455–169A, Chromatic Dispersion Measurement by Single-Mode Optical Fibers by the Phase-Shift Method.	1755.900(a)(9); (p)(1)(vi)(B)
EIA/TIA 455–170, Cable Cutoff Wavelength of Single-Mode Fiber by Transmitted Power.	1755.900(a)(9); (p)(1)(viii)
EIA/TIA 455–173, Coating Geometry Measurement for Optical Fiber Side-View Method.	1755.900(a)(9); (b)(12)

7 CFR (PARTS 1600–1899)—Continued

RURAL UTILITIES SERVICE, DEPARTMENT OF AGRICULTURE—Continued

	7 CFR
EIA/TIA 455–174, Mode Field Diameter of Single-Mode Optical Fiber by Knife-Edge Scanning in the Far Field.	1755.900(a)(8); (b)(3)(iv)
EIA/TIA 455–175A, Chromatic Dispersion Measurement of Single-Mode Optical Fibers by the Differential Phase Shift Method.	1755.900(a)(9); (p)(1)(vi)(C)
EIA/TIA 455–176, Method for Measuring Optical Fiber Cross-Sectional Geometry by Automated Grey-Scale Analysis.	1755.900(a)(9); (b)(5); (b)(6); (b)(7); (b)(8)(ii)
EIA/TIA 455–177A, Numerical Aperture Measurement of Graded-Index Optical Fibers.	1755.900(a)(9); (p)(3)
EIA/TIA 455-178, Measurements of Strip Force Required for Mechanically Removing Coatings from Optical Fibers.	1755.900(a)(9); (b)(13)
EIA/TIA 455–598, Color Coding of Fiber Optic Cables	1755.900(a)(9); (d)(2)
General Services Administration Specification Section, 490 East L'Enfant Plaza, SW., Washington, DC 20407. Telephone: 202–755–0325	
Federal Standard H28, Screw-Thread Standards for Federal Services, March 31, 1978, including Change Notice 1, May 28, 1986; Change Notice 2, January 20, 1989; and Change Notice 3, March 12, 1990.	1755.397; 1755.522
Institute of Electrical and Electronics Engineers IEEE Service Center, 445 Hoes Lane, Piscataway, NJ 08855, Telephone: (800)–678–4333	
IEEE Std 730–1989, IEEE Standard for Software Quality Assurance Plans.	1755.522
IEEE Std 455–1985, IEEE Standard Test Procedure for Measuring Longitudinal Balance of Telephone Equipment Operating in the Voice Band.	1755.397; 1755.522
Southern Pine Inspection Bureau 4709 Scenic Highway, Pensacola, Florida 32504, Telephone (904) 434–2611	
Southern Pine Inspection Bureau—Standard Grading Rules for Southern Pine Lumber, October 15, 1991.	1728.201
Southern Pine Inspection Bureau—Special Product Rules for Structural, Industrial, and Railroad-Freight Car Lumber, October 15, 1991.	1728.201
Underwriters Laboratories, Inc. (UL) Available from: Global Engineering Documents, 15 Inverness Way East, Englewood, CO 80112, Telephone (800) 854–7179 or Global Engineering Documents, 7730 Carondelet Ave., Suite 470, Clayton, MO 63105, Telephone (800) 854–7179	
UL 94, Standard for Safety Tests for Flammability of Plastic Materials for Parts in Devices and Appliances, fourth edition, June 18, 1991.	1755.910
UL 1666, Test for Flame Propagation Height of Electrical and Optical-Fiber Cables Installed Vertically in Shafts, January 22, 1991.	1755.870
West Coast Lumber Inspection Bureau P.O. Box 23145, Portland, Oregon 97223, Telephone (503) 639–0651, Fax (503) 684–8928	
West Coast Lumber Inspection Bureau—Standard No. 17, Grading Rules for West Coast Lumber, September 1, 1991.	1728.201

Table of CFR Titles and Chapters

(Revised as of January 1, 1998)

Title 1—General Provisions

I Administrative Committee of the Federal Register (Parts 1—49)
II Office of the Federal Register (Parts 50—299)
IV Miscellaneous Agencies (Parts 400—500)

Title 2—[Reserved]

Title 3—The President

I Executive Office of the President (Parts 100—199)

Title 4—Accounts

I General Accounting Office (Parts 1—99)
II Federal Claims Collection Standards (General Accounting Office—Department of Justice) (Parts 100—299)

Title 5—Administrative Personnel

I Office of Personnel Management (Parts 1—1199)
II Merit Systems Protection Board (Parts 1200—1299)
III Office of Management and Budget (Parts 1300—1399)
IV Advisory Committee on Federal Pay (Parts 1400—1499)
V The International Organizations Employees Loyalty Board (Parts 1500—1599)
VI Federal Retirement Thrift Investment Board (Parts 1600—1699)
VII Advisory Commission on Intergovernmental Relations (Parts 1700—1799)
VIII Office of Special Counsel (Parts 1800—1899)
IX Appalachian Regional Commission (Parts 1900—1999)
XI Armed Forces Retirement Home (Part 2100)
XIV Federal Labor Relations Authority, General Counsel of the Federal Labor Relations Authority and Federal Service Impasses Panel (Parts 2400—2499)
XV Office of Administration, Executive Office of the President (Parts 2500—2599)
XVI Office of Government Ethics (Parts 2600—2699)
XXI Department of the Treasury (Parts 3100—3199)
XXII Federal Deposit Insurance Corporation (Part 3201)
XXIII Department of Energy (Part 3301)

Title 5—Administrative Personnel—Continued

Chap.	
XXIV	Federal Energy Regulatory Commission (Part 3401)
XXV	Department of the Interior (Part 3501)
XXVI	Department of Defense (Part 3601)
XXVIII	Department of Justice (Part 3801)
XXIX	Federal Communications Commission (Parts 3900—3999)
XXX	Farm Credit System Insurance Corporation (Parts 4000—4099)
XXXI	Farm Credit Administration (Parts 4100—4199)
XXXIII	Overseas Private Investment Corporation (Part 4301)
XXXV	Office of Personnel Management (Part 4501)
XL	Interstate Commerce Commission (Part 5001)
XLI	Commodity Futures Trading Commission (Part 5101)
XLII	Department of Labor (Part 5201)
XLIII	National Science Foundation (Part 5301)
XLV	Department of Health and Human Services (Part 5501)
XLVI	Postal Rate Commission (Part 5601)
XLVII	Federal Trade Commission (Part 5701)
XLVIII	Nuclear Regulatory Commission (Part 5801)
L	Department of Transportation (Part 6001)
LII	Export-Import Bank of the United States (Part 6201)
LIII	Department of Education (Parts 6300—6399)
LIV	Environmental Protection Agency (Part 6401)
LVII	General Services Administration (Part 6701)
LVIII	Board of Governors of the Federal Reserve System (Part 6801)
LIX	National Aeronautics and Space Administration (Part 6901)
LX	United States Postal Service (Part 7001)
LXI	National Labor Relations Board (Part 7101)
LXII	Equal Employment Opportunity Commission (Part 7201)
LXIII	Inter-American Foundation (Part 7301)
LXV	Department of Housing and Urban Development (Part 7501)
LXVI	National Archives and Records Administration (Part 7601)
LXIX	Tennessee Valley Authority (Part 7901)
LXXI	Consumer Product Safety Commission (Part 8101)
LXXIV	Federal Mine Safety and Health Review Commission (Part 8401)
LXXVI	Federal Retirement Thrift Investment Board (Part 8601)
LXXVII	Office of Management and Budget (Part 8701)

Title 6—[Reserved]

Title 7—Agriculture

SUBTITLE A—Office of the Secretary of Agriculture (Parts 0—26)

SUBTITLE B—Regulations of the Department of Agriculture

I Agricultural Marketing Service (Standards, Inspections, Marketing Practices), Department of Agriculture (Parts 27—209)

II Food and Consumer Service, Department of Agriculture (Parts 210—299)

Title 7—Agriculture—Continued

Chap.	
III	Animal and Plant Health Inspection Service, Department of Agriculture (Parts 300—399)
IV	Federal Crop Insurance Corporation, Department of Agriculture (Parts 400—499)
V	Agricultural Research Service, Department of Agriculture (Parts 500—599)
VI	Natural Resources Conservation Service, Department of Agriculture (Parts 600—699)
VII	Farm Service Agency, Department of Agriculture (Parts 700—799)
VIII	Grain Inspection, Packers and Stockyards Administration (Federal Grain Inspection Service), Department of Agriculture (Parts 800—899)
IX	Agricultural Marketing Service (Marketing Agreements and Orders; Fruits, Vegetables, Nuts), Department of Agriculture (Parts 900—999)
X	Agricultural Marketing Service (Marketing Agreements and Orders; Milk), Department of Agriculture (Parts 1000—1199)
XI	Agricultural Marketing Service (Marketing Agreements and Orders; Miscellaneous Commodities), Department of Agriculture (Parts 1200—1299)
XIII	Northeast Dairy Compact Commission (Parts 1300—1399)
XIV	Commodity Credit Corporation, Department of Agriculture (Parts 1400—1499)
XV	Foreign Agricultural Service, Department of Agriculture (Parts 1500—1599)
XVI	Rural Telephone Bank, Department of Agriculture (Parts 1600—1699)
XVII	Rural Utilities Service, Department of Agriculture (Parts 1700—1799)
XVIII	Rural Housing Service, Rural Business-Cooperative Service, Rural Utilities Service, and Farm Service Agency, Department of Agriculture (Parts 1800—2099)
XXVI	Office of Inspector General, Department of Agriculture (Parts 2600—2699)
XXVII	Office of Information Resources Management, Department of Agriculture (Parts 2700—2799)
XXVIII	Office of Operations, Department of Agriculture (Parts 2800—2899)
XXIX	Office of Energy, Department of Agriculture (Parts 2900—2999)
XXX	Office of the Chief Financial Officer, Department of Agriculture (Parts 3000—3099)
XXXI	Office of Environmental Quality, Department of Agriculture (Parts 3100—3199)
XXXII	[Reserved]
XXXIII	Office of Transportation, Department of Agriculture (Parts 3300—3399)
XXXIV	Cooperative State Research, Education, and Extension Service, Department of Agriculture (Parts 3400—3499)
XXXV	Rural Housing Service, Department of Agriculture (Parts 3500—3599)

Title 7—Agriculture—Continued

Chap.

XXXVI National Agricultural Statistics Service, Department of Agriculture (Parts 3600—3699)

XXXVII Economic Research Service, Department of Agriculture (Parts 3700—3799)

XXXVIII World Agricultural Outlook Board, Department of Agriculture (Parts 3800—3899)

XLI [Reserved]

XLII Rural Business-Cooperative Service and Rural Utilities Service, Department of Agriculture (Parts 4200—4299)

Title 8—Aliens and Nationality

I Immigration and Naturalization Service, Department of Justice (Parts 1—499)

Title 9—Animals and Animal Products

I Animal and Plant Health Inspection Service, Department of Agriculture (Parts 1—199)

II Grain Inspection, Packers and Stockyards Administration (Packers and Stockyards Programs), Department of Agriculture (Parts 200—299)

III Food Safety and Inspection Service, Meat and Poultry Inspection, Department of Agriculture (Parts 300—599)

Title 10—Energy

I Nuclear Regulatory Commission (Parts 0—199)

II Department of Energy (Parts 200—699)

III Department of Energy (Parts 700—999)

X Department of Energy (General Provisions) (Parts 1000—1099)

XI United States Enrichment Corporation (Parts 1100—1199)

XV Office of the Federal Inspector for the Alaska Natural Gas Transportation System (Parts 1500—1599)

XVII Defense Nuclear Facilities Safety Board (Parts 1700—1799)

Title 11—Federal Elections

I Federal Election Commission (Parts 1—9099)

Title 12—Banks and Banking

I Comptroller of the Currency, Department of the Treasury (Parts 1—199)

II Federal Reserve System (Parts 200—299)

III Federal Deposit Insurance Corporation (Parts 300—399)

IV Export-Import Bank of the United States (Parts 400—499)

V Office of Thrift Supervision, Department of the Treasury (Parts 500—599)

VI Farm Credit Administration (Parts 600—699)

VII National Credit Union Administration (Parts 700—799)

Title 12—Banks and Banking—Continued

Chap.

VIII Federal Financing Bank (Parts 800—899)

IX Federal Housing Finance Board (Parts 900—999)

XI Federal Financial Institutions Examination Council (Parts 1100—1199)

XIV Farm Credit System Insurance Corporation (Parts 1400—1499)

XV Thrift Depositor Protection Oversight Board (Parts 1500—1599)

XVII Office of Federal Housing Enterprise Oversight, Department of Housing and Urban Development (Parts 1700-1799)

XVIII Community Development Financial Institutions Fund, Department of the Treasury (Parts 1800—1899)

Title 13—Business Credit and Assistance

I Small Business Administration (Parts 1—199)

III Economic Development Administration, Department of Commerce (Parts 300—399)

Title 14—Aeronautics and Space

I Federal Aviation Administration, Department of Transportation (Parts 1—199)

II Office of the Secretary, Department of Transportation (Aviation Proceedings) (Parts 200—399)

III Commercial Space Transportation, Federal Aviation Administration, Department of Transportation (Parts 400—499)

V National Aeronautics and Space Administration (Parts 1200—1299)

Title 15—Commerce and Foreign Trade

SUBTITLE A—Office of the Secretary of Commerce (Parts 0—29)

SUBTITLE B—Regulations Relating to Commerce and Foreign Trade

I Bureau of the Census, Department of Commerce (Parts 30—199)

II National Institute of Standards and Technology, Department of Commerce (Parts 200—299)

III International Trade Administration, Department of Commerce (Parts 300—399)

IV Foreign-Trade Zones Board, Department of Commerce (Parts 400—499)

VII Bureau of Export Administration, Department of Commerce (Parts 700—799)

VIII Bureau of Economic Analysis, Department of Commerce (Parts 800—899)

IX National Oceanic and Atmospheric Administration, Department of Commerce (Parts 900—999)

XI Technology Administration, Department of Commerce (Parts 1100—1199)

XIII East-West Foreign Trade Board (Parts 1300—1399)

XIV Minority Business Development Agency (Parts 1400—1499)

Title 15—Commerce and Foreign Trade—Continued

Chap.

SUBTITLE C—Regulations Relating to Foreign Trade Agreements

XX Office of the United States Trade Representative (Parts 2000—2099)

SUBTITLE D—Regulations Relating to Telecommunications and Information

XXIII National Telecommunications and Information Administration, Department of Commerce (Parts 2300—2399)

Title 16—Commercial Practices

I Federal Trade Commission (Parts 0—999)

II Consumer Product Safety Commission (Parts 1000—1799)

Title 17—Commodity and Securities Exchanges

I Commodity Futures Trading Commission (Parts 1—199)

II Securities and Exchange Commission (Parts 200—399)

IV Department of the Treasury (Parts 400—499)

Title 18—Conservation of Power and Water Resources

I Federal Energy Regulatory Commission, Department of Energy (Parts 1—399)

III Delaware River Basin Commission (Parts 400—499)

VI Water Resources Council (Parts 700—799)

VIII Susquehanna River Basin Commission (Parts 800—899)

XIII Tennessee Valley Authority (Parts 1300—1399)

Title 19—Customs Duties

I United States Customs Service, Department of the Treasury (Parts 1—199)

II United States International Trade Commission (Parts 200—299)

III International Trade Administration, Department of Commerce (Parts 300—399)

Title 20—Employees' Benefits

I Office of Workers' Compensation Programs, Department of Labor (Parts 1—199)

II Railroad Retirement Board (Parts 200—399)

III Social Security Administration (Parts 400—499)

IV Employees' Compensation Appeals Board, Department of Labor (Parts 500—599)

V Employment and Training Administration, Department of Labor (Parts 600—699)

VI Employment Standards Administration, Department of Labor (Parts 700—799)

VII Benefits Review Board, Department of Labor (Parts 800—899)

VIII Joint Board for the Enrollment of Actuaries (Parts 900—999)

Title 20—Employees' Benefits—Continued

Chap.

IX Office of the Assistant Secretary for Veterans' Employment and Training, Department of Labor (Parts 1000—1099)

Title 21—Food and Drugs

I Food and Drug Administration, Department of Health and Human Services (Parts 1—1299)

II Drug Enforcement Administration, Department of Justice (Parts 1300—1399)

III Office of National Drug Control Policy (Parts 1400—1499)

Title 22—Foreign Relations

I Department of State (Parts 1—199)

II Agency for International Development, International Development Cooperation Agency (Parts 200—299)

III Peace Corps (Parts 300—399)

IV International Joint Commission, United States and Canada (Parts 400—499)

V United States Information Agency (Parts 500—599)

VI United States Arms Control and Disarmament Agency (Parts 600—699)

VII Overseas Private Investment Corporation, International Development Cooperation Agency (Parts 700—799)

IX Foreign Service Grievance Board Regulations (Parts 900—999)

X Inter-American Foundation (Parts 1000—1099)

XI International Boundary and Water Commission, United States and Mexico, United States Section (Parts 1100—1199)

XII United States International Development Cooperation Agency (Parts 1200—1299)

XIII Board for International Broadcasting (Parts 1300—1399)

XIV Foreign Service Labor Relations Board; Federal Labor Relations Authority; General Counsel of the Federal Labor Relations Authority; and the Foreign Service Impasse Disputes Panel (Parts 1400—1499)

XV African Development Foundation (Parts 1500—1599)

XVI Japan-United States Friendship Commission (Parts 1600—1699)

XVII United States Institute of Peace (Parts 1700—1799)

Title 23—Highways

I Federal Highway Administration, Department of Transportation (Parts 1—999)

II National Highway Traffic Safety Administration and Federal Highway Administration, Department of Transportation (Parts 1200—1299)

III National Highway Traffic Safety Administration, Department of Transportation (Parts 1300—1399)

Title 24—Housing and Urban Development

Chap.

SUBTITLE A—Office of the Secretary, Department of Housing and Urban Development (Parts 0—99)

SUBTITLE B—Regulations Relating to Housing and Urban Development

I Office of Assistant Secretary for Equal Opportunity, Department of Housing and Urban Development (Parts 100—199)

II Office of Assistant Secretary for Housing-Federal Housing Commissioner, Department of Housing and Urban Development (Parts 200—299)

III Government National Mortgage Association, Department of Housing and Urban Development (Parts 300—399)

V Office of Assistant Secretary for Community Planning and Development, Department of Housing and Urban Development (Parts 500—599)

VI Office of Assistant Secretary for Community Planning and Development, Department of Housing and Urban Development (Parts 600—699) [Reserved]

VII Office of the Secretary, Department of Housing and Urban Development (Housing Assistance Programs and Public and Indian Housing Programs) (Parts 700—799)

VIII Office of the Assistant Secretary for Housing—Federal Housing Commissioner, Department of Housing and Urban Development (Section 8 Housing Assistance Programs and Section 202 Direct Loan Program) (Parts 800—899)

IX Office of Assistant Secretary for Public and Indian Housing, Department of Housing and Urban Development (Parts 900—999)

X Office of Assistant Secretary for Housing—Federal Housing Commissioner, Department of Housing and Urban Development (Interstate Land Sales Registration Program) (Parts 1700—1799)

XII Office of Inspector General, Department of Housing and Urban Development (Parts 2000—2099)

XX Office of Assistant Secretary for Housing—Federal Housing Commissioner, Department of Housing and Urban Development (Parts 3200—3899)

XXV Neighborhood Reinvestment Corporation (Parts 4100—4199)

Title 25—Indians

I Bureau of Indian Affairs, Department of the Interior (Parts 1—299)

II Indian Arts and Crafts Board, Department of the Interior (Parts 300—399)

III National Indian Gaming Commission, Department of the Interior (Parts 500—599)

IV Office of Navajo and Hopi Indian Relocation (Parts 700—799)

V Bureau of Indian Affairs, Department of the Interior, and Indian Health Service, Department of Health and Human Services (Part 900)

VI Office of the Assistant Secretary-Indian Affairs, Department of the Interior (Part 1001)

Title 25—Indians—Continued

Chap.

VII Office of the Special Trustee for American Indians, Department of the Interior (Part 1200)

Title 26—Internal Revenue

I Internal Revenue Service, Department of the Treasury (Parts 1—799)

Title 27—Alcohol, Tobacco Products and Firearms

I Bureau of Alcohol, Tobacco and Firearms, Department of the Treasury (Parts 1—299)

Title 28—Judicial Administration

I Department of Justice (Parts 0—199)

III Federal Prison Industries, Inc., Department of Justice (Parts 300—399)

V Bureau of Prisons, Department of Justice (Parts 500—599)

VI Offices of Independent Counsel, Department of Justice (Parts 600—699)

VII Office of Independent Counsel (Parts 700—799)

Title 29—Labor

SUBTITLE A—Office of the Secretary of Labor (Parts 0—99)

SUBTITLE B—Regulations Relating to Labor

I National Labor Relations Board (Parts 100—199)

II Office of Labor-Management Standards, Department of Labor (Parts 200—299)

III National Railroad Adjustment Board (Parts 300—399)

IV Office of Labor-Management Standards, Department of Labor (Parts 400—499)

V Wage and Hour Division, Department of Labor (Parts 500—899)

IX Construction Industry Collective Bargaining Commission (Parts 900—999)

X National Mediation Board (Parts 1200—1299)

XII Federal Mediation and Conciliation Service (Parts 1400—1499)

XIV Equal Employment Opportunity Commission (Parts 1600—1699)

XVII Occupational Safety and Health Administration, Department of Labor (Parts 1900—1999)

XX Occupational Safety and Health Review Commission (Parts 2200—2499)

XXV Pension and Welfare Benefits Administration, Department of Labor (Parts 2500—2599)

XXVII Federal Mine Safety and Health Review Commission (Parts 2700—2799)

XL Pension Benefit Guaranty Corporation (Parts 4000—4999)

Title 30—Mineral Resources

Chap.

I Mine Safety and Health Administration, Department of Labor (Parts 1—199)

II Minerals Management Service, Department of the Interior (Parts 200—299)

III Board of Surface Mining and Reclamation Appeals, Department of the Interior (Parts 300—399)

IV Geological Survey, Department of the Interior (Parts 400—499)

VI Bureau of Mines, Department of the Interior (Parts 600—699)

VII Office of Surface Mining Reclamation and Enforcement, Department of the Interior (Parts 700—999)

Title 31—Money and Finance: Treasury

SUBTITLE A—Office of the Secretary of the Treasury (Parts 0—50)

SUBTITLE B—Regulations Relating to Money and Finance

I Monetary Offices, Department of the Treasury (Parts 51—199)

II Fiscal Service, Department of the Treasury (Parts 200—399)

IV Secret Service, Department of the Treasury (Parts 400—499)

V Office of Foreign Assets Control, Department of the Treasury (Parts 500—599)

VI Bureau of Engraving and Printing, Department of the Treasury (Parts 600—699)

VII Federal Law Enforcement Training Center, Department of the Treasury (Parts 700—799)

VIII Office of International Investment, Department of the Treasury (Parts 800—899)

Title 32—National Defense

SUBTITLE A—Department of Defense

I Office of the Secretary of Defense (Parts 1—399)

V Department of the Army (Parts 400—699)

VI Department of the Navy (Parts 700—799)

VII Department of the Air Force (Parts 800—1099)

SUBTITLE B—Other Regulations Relating to National Defense

XII Defense Logistics Agency (Parts 1200—1299)

XVI Selective Service System (Parts 1600—1699)

XIX Central Intelligence Agency (Parts 1900—1999)

XX Information Security Oversight Office, National Archives and Records Administration (Parts 2000—2099)

XXI National Security Council (Parts 2100—2199)

XXIV Office of Science and Technology Policy (Parts 2400—2499)

XXVII Office for Micronesian Status Negotiations (Parts 2700—2799)

XXVIII Office of the Vice President of the United States (Parts 2800—2899)

XXIX Presidential Commission on the Assignment of Women in the Armed Forces (Part 2900)

Title 33—Navigation and Navigable Waters

Chap.

I Coast Guard, Department of Transportation (Parts 1—199)

II Corps of Engineers, Department of the Army (Parts 200—399)

IV Saint Lawrence Seaway Development Corporation, Department of Transportation (Parts 400—499)

Title 34—Education

SUBTITLE A—Office of the Secretary, Department of Education (Parts 1—99)

SUBTITLE B—Regulations of the Offices of the Department of Education

I Office for Civil Rights, Department of Education (Parts 100—199)

II Office of Elementary and Secondary Education, Department of Education (Parts 200—299)

III Office of Special Education and Rehabilitative Services, Department of Education (Parts 300—399)

IV Office of Vocational and Adult Education, Department of Education (Parts 400—499)

V Office of Bilingual Education and Minority Languages Affairs, Department of Education (Parts 500—599)

VI Office of Postsecondary Education, Department of Education (Parts 600—699)

VII Office of Educational Research and Improvement, Department of Education (Parts 700—799)

XI National Institute for Literacy (Parts 1100-1199)

SUBTITLE C—Regulations Relating to Education

XII National Council on Disability (Parts 1200—1299)

Title 35—Panama Canal

I Panama Canal Regulations (Parts 1—299)

Title 36—Parks, Forests, and Public Property

I National Park Service, Department of the Interior (Parts 1—199)

II Forest Service, Department of Agriculture (Parts 200—299)

III Corps of Engineers, Department of the Army (Parts 300—399)

IV American Battle Monuments Commission (Parts 400—499)

V Smithsonian Institution (Parts 500—599)

VII Library of Congress (Parts 700—799)

VIII Advisory Council on Historic Preservation (Parts 800—899)

IX Pennsylvania Avenue Development Corporation (Parts 900—999)

XI Architectural and Transportation Barriers Compliance Board (Parts 1100—1199)

XII National Archives and Records Administration (Parts 1200—1299)

XIV Assassination Records Review Board (Parts 1400-1499)

Title 37—Patents, Trademarks, and Copyrights

Chap.

I Patent and Trademark Office, Department of Commerce (Parts 1—199)

II Copyright Office, Library of Congress (Parts 200—299)

IV Assistant Secretary for Technology Policy, Department of Commerce (Parts 400—499)

V Under Secretary for Technology, Department of Commerce (Parts 500—599)

Title 38—Pensions, Bonuses, and Veterans' Relief

I Department of Veterans Affairs (Parts 0—99)

Title 39—Postal Service

I United States Postal Service (Parts 1—999)

III Postal Rate Commission (Parts 3000—3099)

Title 40—Protection of Environment

I Environmental Protection Agency (Parts 1—799)

V Council on Environmental Quality (Parts 1500—1599)

Title 41—Public Contracts and Property Management

SUBTITLE B—Other Provisions Relating to Public Contracts

50 Public Contracts, Department of Labor (Parts 50–1—50–999)

51 Committee for Purchase From People Who Are Blind or Severely Disabled (Parts 51–1—51–99)

60 Office of Federal Contract Compliance Programs, Equal Employment Opportunity, Department of Labor (Parts 60–1—60–999)

61 Office of the Assistant Secretary for Veterans Employment and Training, Department of Labor (Parts 61–1—61–999)

SUBTITLE C—Federal Property Management Regulations System

101 Federal Property Management Regulations (Parts 101–1—101–99)

105 General Services Administration (Parts 105–1—105–999)

109 Department of Energy Property Management Regulations (Parts 109–1—109–99)

114 Department of the Interior (Parts 114–1—114–99)

115 Environmental Protection Agency (Parts 115–1—115–99)

128 Department of Justice (Parts 128–1—128–99)

SUBTITLE D—Other Provisions Relating to Property Management [Reserved]

SUBTITLE E—Federal Information Resources Management Regulations System

201 Federal Information Resources Management Regulation (Parts 201–1—201–99) [Reserved]

SUBTITLE F—Federal Travel Regulation System

301 Travel Allowances (Parts 301–1—301–99)

302 Relocation Allowances (Parts 302–1—302–99)

Title 41—Public Contracts and Property Management—Continued

Chap.

303 Payment of Expenses Connected with the Death of Certain Employees (Parts 303–1—303–2)

304 Payment from a Non-Federal Source for Travel Expenses (Parts 304–1—304–99)

Title 42—Public Health

I Public Health Service, Department of Health and Human Services (Parts 1—199)

IV Health Care Financing Administration, Department of Health and Human Services (Parts 400—499)

V Office of Inspector General-Health Care, Department of Health and Human Services (Parts 1000—1999)

Title 43—Public Lands: Interior

SUBTITLE A—Office of the Secretary of the Interior (Parts 1—199)

SUBTITLE B—Regulations Relating to Public Lands

I Bureau of Reclamation, Department of the Interior (Parts 200—499)

II Bureau of Land Management, Department of the Interior (Parts 1000—9999)

III Utah Reclamation Mitigation and Conservation Commission (Parts 10000—10005)

Title 44—Emergency Management and Assistance

I Federal Emergency Management Agency (Parts 0—399)

IV Department of Commerce and Department of Transportation (Parts 400—499)

Title 45—Public Welfare

SUBTITLE A—Department of Health and Human Services (Parts 1—199)

SUBTITLE B—Regulations Relating to Public Welfare

II Office of Family Assistance (Assistance Programs), Administration for Children and Families, Department of Health and Human Services (Parts 200—299)

III Office of Child Support Enforcement (Child Support Enforcement Program), Administration for Children and Families, Department of Health and Human Services (Parts 300—399)

IV Office of Refugee Resettlement, Administration for Children and Families Department of Health and Human Services (Parts 400—499)

V Foreign Claims Settlement Commission of the United States, Department of Justice (Parts 500—599)

VI National Science Foundation (Parts 600—699)

VII Commission on Civil Rights (Parts 700—799)

VIII Office of Personnel Management (Parts 800—899)

Title 45—Public Welfare—Continued

Chap.

X Office of Community Services, Administration for Children and Families, Department of Health and Human Services (Parts 1000—1099)

XI National Foundation on the Arts and the Humanities (Parts 1100—1199)

XII ACTION (Parts 1200—1299)

XIII Office of Human Development Services, Department of Health and Human Services (Parts 1300—1399)

XVI Legal Services Corporation (Parts 1600—1699)

XVII National Commission on Libraries and Information Science (Parts 1700—1799)

XVIII Harry S. Truman Scholarship Foundation (Parts 1800—1899)

XXI Commission on Fine Arts (Parts 2100—2199)

XXII Christopher Columbus Quincentenary Jubilee Commission (Parts 2200—2299)

XXIII Arctic Research Commission (Part 2301)

XXIV James Madison Memorial Fellowship Foundation (Parts 2400—2499)

XXV Corporation for National and Community Service (Parts 2500—2599)

Title 46—Shipping

I Coast Guard, Department of Transportation (Parts 1—199)

II Maritime Administration, Department of Transportation (Parts 200—399)

IV Federal Maritime Commission (Parts 500—599)

Title 47—Telecommunication

I Federal Communications Commission (Parts 0—199)

II Office of Science and Technology Policy and National Security Council (Parts 200—299)

III National Telecommunications and Information Administration, Department of Commerce (Parts 300—399)

Title 48—Federal Acquisition Regulations System

1 Federal Acquisition Regulation (Parts 1—99)

2 Department of Defense (Parts 200—299)

3 Department of Health and Human Services (Parts 300—399)

4 Department of Agriculture (Parts 400—499)

5 General Services Administration (Parts 500—599)

6 Department of State (Parts 600—699)

7 United States Agency for International Development (Parts 700—799)

8 Department of Veterans Affairs (Parts 800—899)

9 Department of Energy (Parts 900—999)

10 Department of the Treasury (Parts 1000—1099)

Title 48—Federal Acquisition Regulations System—Continued

Chap.

12 Department of Transportation (Parts 1200—1299)

13 Department of Commerce (Parts 1300—1399)

14 Department of the Interior (Parts 1400—1499)

15 Environmental Protection Agency (Parts 1500—1599)

16 Office of Personnel Management Federal Employees Health Benefits Acquisition Regulation (Parts 1600—1699)

17 Office of Personnel Management (Parts 1700—1799)

18 National Aeronautics and Space Administration (Parts 1800—1899)

19 United States Information Agency (Parts 1900—1999)

20 Nuclear Regulatory Commission (Parts 2000—2099)

21 Office of Personnel Management, Federal Employees Group Life Insurance Federal Acquisition Regulation (Parts 2100—2199)

23 Social Security Administration (Parts 2300—2399)

24 Department of Housing and Urban Development (Parts 2400—2499)

25 National Science Foundation (Parts 2500—2599)

28 Department of Justice (Parts 2800—2899)

29 Department of Labor (Parts 2900—2999)

34 Department of Education Acquisition Regulation (Parts 3400—3499)

35 Panama Canal Commission (Parts 3500—3599)

44 Federal Emergency Management Agency (Parts 4400—4499)

51 Department of the Army Acquisition Regulations (Parts 5100—5199)

52 Department of the Navy Acquisition Regulations (Parts 5200—5299)

53 Department of the Air Force Federal Acquisition Regulation Supplement (Parts 5300—5399)

54 Defense Logistics Agency, Department of Defense (Part 5452)

57 African Development Foundation (Parts 5700—5799)

61 General Services Administration Board of Contract Appeals (Parts 6100—6199)

63 Department of Transportation Board of Contract Appeals (Parts 6300—6399)

99 Cost Accounting Standards Board, Office of Federal Procurement Policy, Office of Management and Budget (Parts 9900—9999)

Title 49—Transportation

SUBTITLE A—Office of the Secretary of Transportation (Parts 1—99)

SUBTITLE B—Other Regulations Relating to Transportation

I Research and Special Programs Administration, Department of Transportation (Parts 100—199)

II Federal Railroad Administration, Department of Transportation (Parts 200—299)

Title 49—Transportation—Continued

Chap.

III Federal Highway Administration, Department of Transportation (Parts 300—399)

IV Coast Guard, Department of Transportation (Parts 400—499)

V National Highway Traffic Safety Administration, Department of Transportation (Parts 500—599)

VI Federal Transit Administration, Department of Transportation (Parts 600—699)

VII National Railroad Passenger Corporation (AMTRAK) (Parts 700—799)

VIII National Transportation Safety Board (Parts 800—999)

X Surface Transportation Board, Department of Transportation (Parts 1000—1399)

Title 50—Wildlife and Fisheries

I United States Fish and Wildlife Service, Department of the Interior (Parts 1—199)

II National Marine Fisheries Service, National Oceanic and Atmospheric Administration, Department of Commerce (Parts 200—299)

III International Fishing and Related Activities (Parts 300—399)

IV Joint Regulations (United States Fish and Wildlife Service, Department of the Interior and National Marine Fisheries Service, National Oceanic and Atmospheric Administration, Department of Commerce); Endangered Species Committee Regulations (Parts 400—499)

V Marine Mammal Commission (Parts 500—599)

VI Fishery Conservation and Management, National Oceanic and Atmospheric Administration, Department of Commerce (Parts 600—699)

CFR Index and Finding Aids

Subject/Agency Index

List of Agency Prepared Indexes

Parallel Tables of Statutory Authorities and Rules

List of CFR Titles, Chapters, Subchapters, and Parts

Alphabetical List of Agencies Appearing in the CFR

Alphabetical List of Agencies Appearing in the CFR

(Revised as of January 1, 1998)

Agency	CFR Title, Subtitle or Chapter
ACTION	45, XII
Administrative Committee of the Federal Register	1, I
Advanced Research Projects Agency	32, I
Advisory Commission on Intergovernmental Relations	5, VII
Advisory Committee on Federal Pay	5, IV
Advisory Council on Historic Preservation	36, VIII
African Development Foundation	22, XV
Federal Acquisition Regulation	48, 57
Agency for International Development, United States	22, II
Federal Acquisition Regulation	48, 7
Agricultural Marketing Service	7, I, IX, X, XI
Agricultural Research Service	7, V
Agriculture Department	
Agricultural Marketing Service	7, I, IX, X, XI
Agricultural Research Service	7, V
Animal and Plant Health Inspection Service	7, III; 9, I
Chief Financial Officer, Office of	7, XXX
Commodity Credit Corporation	7, XIV
Cooperative State Research, Education, and Extension Service	7, XXXIV
Economic Research Service	7, XXXVII
Energy, Office of	7, XXIX
Environmental Quality, Office of	7, XXXI
Farm Service Agency	7, VII, XVIII
Federal Acquisition Regulation	48, 4
Federal Crop Insurance Corporation	7, IV
Food and Consumer Service	7, II
Food Safety and Inspection Service	9, III
Foreign Agricultural Service	7, XV
Forest Service	36, II
Grain Inspection, Packers and Stockyards Administration	7, VIII; 9, II
Information Resources Management, Office of	7, XXVII
Inspector General, Office of	7, XXVI
National Agricultural Library	7, XLI
National Agricultural Statistics Service	7, XXXVI
Natural Resources Conservation Service	7, VI
Operations, Office of	7, XXVIII
Rural Business-Cooperative Service	7, XVIII, XLII
Rural Development Administration	7, XLII
Rural Housing Service	7, XVIII, XXXV
Rural Telephone Bank	7, XVI
Rural Utilities Service	7, XVII, XVIII, XLII
Secretary of Agriculture, Office of	7, Subtitle A
Transportation, Office of	7, XXXIII
World Agricultural Outlook Board	7, XXXVIII
Air Force Department	32, VII
Federal Acquisition Regulation Supplement	48, 53
Alaska Natural Gas Transportation System, Office of the Federal Inspector	10, XV
Alcohol, Tobacco and Firearms, Bureau of	27, I
AMTRAK	49, VII
American Battle Monuments Commission	36, IV
American Indians, Office of the Special Trustee	25, VII

Agency	CFR Title, Subtitle or Chapter
Animal and Plant Health Inspection Service	7, III; 9, I
Appalachian Regional Commission	5, IX
Architectural and Transportation Barriers Compliance Board	36, XI
Arctic Research Commission	45, XXIII
Armed Forces Retirement Home	5, XI
Arms Control and Disarmament Agency, United States	22, VI
Army Department	32, V
Engineers, Corps of	33, II; 36, III
Federal Acquisition Regulation	48, 51
Assassination Records Review Board	36, XIV
Benefits Review Board	20, VII
Bilingual Education and Minority Languages Affairs, Office of	34, V
Blind or Severely Disabled, Committee for Purchase From People Who Are	41, 51
Board for International Broadcasting	22, XIII
Census Bureau	15, I
Central Intelligence Agency	32, XIX
Chief Financial Officer, Office of	7, XXX
Child Support Enforcement, Office of	45, III
Children and Families, Administration for	45, II, III, IV, X
Christopher Columbus Quincentenary Jubilee Commission	45, XXII
Civil Rights, Commission on	45, VII
Civil Rights, Office for	34, I
Coast Guard	33, I; 46, I; 49, IV
Commerce Department	44, IV
Census Bureau	15, I‘
Economic Affairs, Under Secretary	37, V
Economic Analysis, Bureau of	15, VIII
Economic Development Administration	13, III
Emergency Management and Assistance	44, IV
Export Administration, Bureau of	15, VII
Federal Acquisition Regulation	48, 13
Fishery Conservation and Management	50, VI
Foreign-Trade Zones Board	15, IV
International Trade Administration	15, III; 19, III
National Institute of Standards and Technology	15, II
National Marine Fisheries Service	50, II, IV
National Oceanic and Atmospheric Administration	15, IX; 50, II, III, IV, VI
National Telecommunications and Information Administration	15, XXIII; 47, III
National Weather Service	15, IX
Patent and Trademark Office	37, I
Productivity, Technology and Innovation, Assistant Secretary for	37, IV
Secretary of Commerce, Office of	15, Subtitle A
Technology, Under Secretary for	37, V
Technology Administration	15, XI
Technology Policy, Assistant Secretary for	37, IV
Commercial Space Transportation	14, III
Commodity Credit Corporation	7, XIV
Commodity Futures Trading Commission	5, XLI; 17, I
Community Planning and Development, Office of Assistant Secretary for	24, V, VI
Community Services, Office of	45, X
Comptroller of the Currency	12, I
Construction Industry Collective Bargaining Commission	29, IX
Consumer Product Safety Commission	5, LXXI; 16, II
Cooperative State Research, Education, and Extension Service	7, XXXIV
Copyright Office	37, II
Cost Accounting Standards Board	48, 99
Council on Environmental Quality	40, V
Customs Service, United States	19, I
Defense Contract Audit Agency	32, I
Defense Department	5, XXVI; 32, Subtitle A
Advanced Research Projects Agency	32, I
Air Force Department	32, VII

Agency	CFR Title, Subtitle or Chapter
Army Department	32, V; 33, II; 36, III, 48, 51
Defense Intelligence Agency	32, I
Defense Logistics Agency	32, I, XII; 48, 54
Engineers, Corps of	33, II; 36, III
Federal Acquisition Regulation	48, 2
National Imagery and Mapping Agency	32, I
Navy Department	32, VI; 48, 52
Secretary of Defense, Office of	32, I
Defense Contract Audit Agency	32, I
Defense Intelligence Agency	32, I
Defense Logistics Agency	32, XII; 48, 54
Defense Nuclear Facilities Safety Board	10, XVII
Delaware River Basin Commission	18, III
Drug Enforcement Administration	21, II
East-West Foreign Trade Board	15, XIII
Economic Affairs, Under Secretary	37, V
Economic Analysis, Bureau of	15, VIII
Economic Development Administration	13, III
Economic Research Service	7, XXXVII
Education, Department of	5, LIII
Bilingual Education and Minority Languages Affairs, Office of	34, V
Civil Rights, Office for	34, I
Educational Research and Improvement, Office of	34, VII
Elementary and Secondary Education, Office of	34, II
Federal Acquisition Regulation	48, 34
Postsecondary Education, Office of	34, VI
Secretary of Education, Office of	34, Subtitle A
Special Education and Rehabilitative Services, Office of	34, III
Vocational and Adult Education, Office of	34, IV
Educational Research and Improvement, Office of	34, VII
Elementary and Secondary Education, Office of	34, II
Employees' Compensation Appeals Board	20, IV
Employees Loyalty Board	5, V
Employment and Training Administration	20, V
Employment Standards Administration	20, VI
Endangered Species Committee	50, IV
Energy, Department of	5, XXIII; 10, II, III, X
Federal Acquisition Regulation	48, 9
Federal Energy Regulatory Commission	5, XXIV; 18, I
Property Management Regulations	41, 109
Energy, Office of	7, XXIX
Engineers, Corps of	33, II; 36, III
Engraving and Printing, Bureau of	31, VI
Enrichment Corporation, United States	10, XI
Environmental Protection Agency	5, LIV; 40, I
Federal Acquisition Regulation	48, 15
Property Management Regulations	41, 115
Environmental Quality, Office of	7, XXXI
Equal Employment Opportunity Commission	5, LXII; 29, XIV
Equal Opportunity, Office of Assistant Secretary for	24, I
Executive Office of the President	3, I
Administration, Office of	5, XV
Environmental Quality, Council on	40, V
Management and Budget, Office of	25, III, LXXVII; 48, 99
National Drug Control Policy, Office of	21, III
National Security Council	32, XXI; 47, 2
Presidential Documents	3
Science and Technology Policy, Office of	32, XXIV; 47, II
Trade Representative, Office of the United States	15, XX
Export Administration, Bureau of	15, VII
Export-Import Bank of the United States	5, LII; 12, IV
Family Assistance, Office of	45, II
Farm Credit Administration	5, XXXI; 12, VI
Farm Credit System Insurance Corporation	5, XXX; 12, XIV
Farm Service Agency	7, VII, XVIII

Agency	CFR Title, Subtitle or Chapter
Federal Acquisition Regulation	48, 1
Federal Aviation Administration	14, I
Commercial Space Transportation	14, III
Federal Claims Collection Standards	4, II
Federal Communications Commission	5, XXIX; 47, I
Federal Contract Compliance Programs, Office of	41, 60
Federal Crop Insurance Corporation	7, IV
Federal Deposit Insurance Corporation	5, XXII; 12, III
Federal Election Commission	11, I
Federal Emergency Management Agency	44, I
Federal Acquisition Regulation	48, 44
Federal Employees Group Life Insurance Federal Acquisition Regulation	48, 21
Federal Employees Health Benefits Acquisition Regulation	48, 16
Federal Energy Regulatory Commission	5, XXIV; 18, I
Federal Financial Institutions Examination Council	12, XI
Federal Financing Bank	12, VIII
Federal Highway Administration	23, I, II; 49, III
Federal Home Loan Mortgage Corporation	1, IV
Federal Housing Enterprise Oversight Office	12, XVII
Federal Housing Finance Board	12, IX
Federal Inspector for the Alaska Natural Gas Transportation System, Office of	10, XV
Federal Labor Relations Authority, and General Counsel of the Federal Labor Relations Authority	5, XIV; 22, XIV
Federal Law Enforcement Training Center	31, VII
Federal Maritime Commission	46, IV
Federal Mediation and Conciliation Service	29, XII
Federal Mine Safety and Health Review Commission	5, LXXIV; 29, XXVII
Federal Pay, Advisory Committee on	5, IV
Federal Prison Industries, Inc.	28, III
Federal Procurement Policy Office	48, 99
Federal Property Management Regulations	41, 101
Federal Property Management Regulations System	41, Subtitle C
Federal Railroad Administration	49, II
Federal Register, Administrative Committee of	1, I
Federal Register, Office of	1, II
Federal Reserve System	12, II
Board of Governors	5, LVIII
Federal Retirement Thrift Investment Board	5, VI, LXXVI
Federal Service Impasses Panel	5, XIV
Federal Trade Commission	5, XLVII; 16, I
Federal Transit Administration	49, VI
Federal Travel Regulation System	41, Subtitle F
Fine Arts, Commission on	45, XXI
Fiscal Service	31, II
Fish and Wildlife Service, United States	50, I, IV
Fishery Conservation and Management	50, VI
Food and Drug Administration	21, I
Food and Consumer Service	7, II
Food Safety and Inspection Service	9, III
Foreign Agricultural Service	7, XV
Foreign Assets Control, Office of	31, V
Foreign Claims Settlement Commission of the United States	45, V
Foreign Service Grievance Board	22, IX
Foreign Service Impasse Disputes Panel	22, XIV
Foreign Service Labor Relations Board	22, XIV
Foreign-Trade Zones Board	15, IV
Forest Service	36, II
General Accounting Office	4, I, II
General Services Administration	5, LVII
Contract Appeals, Board of	48, 61
Federal Acquisition Regulation	48, 5
Federal Property Management Regulations System	41, 101, 105
Federal Travel Regulation System	41, Subtitle F
Payment From a Non-Federal Source for Travel Expenses	41, 304
Payment of Expenses Connected With the Death of Certain Employees	41, 303

Agency	CFR Title, Subtitle or Chapter
Relocation Allowances	41, 302
Travel Allowances	41, 301
Geological Survey	30, IV
Government Ethics, Office of	5, XVI
Government National Mortgage Association	24, III
Grain Inspection, Packers and Stockyards Administration	7, VIII; 9, II
Great Lakes Pilotage	46, III
Harry S. Truman Scholarship Foundation	45, XVIII
Health and Human Services, Department of	5, XLV; 45, Subtitle A
Child Support Enforcement, Office of	45, III
Children and Families, Administration for	45, II, III, IV, X
Community Services, Office of	45, X
Family Assistance, Office of	45, II
Federal Acquisition Regulation	48, 3
Food and Drug Administration	21, I
Health Care Financing Administration	42, IV
Human Development Services, Office of	45, XIII
Indian Health Service	25, V
Inspector General (Health Care), Office of	42, V
Public Health Service	42, I
Refugee Resettlement, Office of	45, IV
Health Care Financing Administration	42, IV
Housing and Urban Development, Department of	5, LXV; 24, Subtitle B
Community Planning and Development, Office of Assistant Secretary for	24, V, VI
Equal Opportunity, Office of Assistant Secretary for	24, I
Federal Acquisition Regulation	48, 24
Federal Housing Enterprise Oversight, Office of	12, XVII
Government National Mortgage Association	24, III
Housing—Federal Housing Commissioner, Office of Assistant Secretary for	24, II, VIII, X, XX
Inspector General, Office of	24, XII
Public and Indian Housing, Office of Assistant Secretary for	24, IX
Secretary, Office of	24, Subtitle A, VII
Housing—Federal Housing Commissioner, Office of Assistant Secretary for	24, II, VIII, X, XX
Human Development Services, Office of	45, XIII
Immigration and Naturalization Service	8, I
Independent Counsel, Office of	28, VII
Indian Affairs, Bureau of	25, I, V
Indian Affairs, Office of the Assistant Secretary	25, VI
Indian Arts and Crafts Board	25, II
Indian Health Service	25, V
Information Agency, United States	22, V
Federal Acquisition Regulation	48, 19
Information Resources Management, Office of	7, XXVII
Information Security Oversight Office, National Archives and Records Administration	32, XX
Inspector General	
Agriculture Department	7, XXVI
Health and Human Services Department	42, V
Housing and Urban Development Department	24, XII
Institute of Peace, United States	22, XVII
Inter-American Foundation	5, LXIII; 22, X
Intergovernmental Relations, Advisory Commission on	5, VII
Interior Department	
American Indians, Office of the Special Trustee	25, VII
Endangered Species Committee	50, IV
Federal Acquisition Regulation	48, 14
Federal Property Management Regulations System	41, 114
Fish and Wildlife Service, United States	50, I, IV
Geological Survey	30, IV
Indian Affairs, Bureau of	25, I, V
Indian Affairs, Office of the Assistant Secretary	25, VI
Indian Arts and Crafts Board	25, II
Land Management, Bureau of	43, II
Minerals Management Service	30, II

Agency	CFR Title, Subtitle or Chapter
Mines, Bureau of	30, VI
National Indian Gaming Commission	25, III
National Park Service	36, I
Reclamation, Bureau of	43, I
Secretary of the Interior, Office of	43, Subtitle A
Surface Mining and Reclamation Appeals, Board of	30, III
Surface Mining Reclamation and Enforcement, Office of	30, VII
Internal Revenue Service	26, I
International Boundary and Water Commission, United States and Mexico, United States Section	22, XI
International Development, United States Agency for	22, II
Federal Acquisition Regulation	48, 7
International Development Cooperation Agency, United States	22, XII
International Development, United States Agency for	22, II; 48, 7
Overseas Private Investment Corporation	5, XXXIII; 22, VII
International Fishing and Related Activities	50, III
International Investment, Office of	31, VIII
International Joint Commission, United States and Canada	22, IV
International Organizations Employees Loyalty Board	5, V
International Trade Administration	15, III; 19, III
International Trade Commission, United States	19, II
Interstate Commerce Commission	5, XL
James Madison Memorial Fellowship Foundation	45, XXIV
Japan–United States Friendship Commission	22, XVI
Joint Board for the Enrollment of Actuaries	20, VIII
Justice Department	5, XXVIII; 28, I
Drug Enforcement Administration	21, II
Federal Acquisition Regulation	48, 28
Federal Claims Collection Standards	4, II
Federal Prison Industries, Inc.	28, III
Foreign Claims Settlement Commission of the United States	45, V
Immigration and Naturalization Service	8, I
Offices of Independent Counsel	28, VI
Prisons, Bureau of	28, V
Property Management Regulations	41, 128
Labor Department	5, XLII
Benefits Review Board	20, VII
Employees' Compensation Appeals Board	20, IV
Employment and Training Administration	20, V
Employment Standards Administration	20, VI
Federal Acquisition Regulation	48, 29
Federal Contract Compliance Programs, Office of	41, 60
Federal Procurement Regulations System	41, 50
Labor-Management Standards, Office of	29, II, IV
Mine Safety and Health Administration	30, I
Occupational Safety and Health Administration	29, XVII
Pension and Welfare Benefits Administration	29, XXV
Public Contracts	41, 50
Secretary of Labor, Office of	29, Subtitle A
Veterans' Employment and Training, Office of the Assistant Secretary for	41, 61; 20, IX
Wage and Hour Division	29, V
Workers' Compensation Programs, Office of	20, I
Labor-Management Standards, Office of	29, II, IV
Land Management, Bureau of	43, II
Legal Services Corporation	45, XVI
Library of Congress	36, VII
Copyright Office	37, II
Management and Budget, Office of	5, III, LXXVII; 48, 99
Marine Mammal Commission	50, V
Maritime Administration	46, II
Merit Systems Protection Board	5, II
Micronesian Status Negotiations, Office for	32, XXVII
Mine Safety and Health Administration	30, I
Minerals Management Service	30, II

Agency	CFR Title, Subtitle or Chapter
Mines, Bureau of	30, VI
Minority Business Development Agency	15, XIV
Miscellaneous Agencies	1, IV
Monetary Offices	31, I
National Aeronautics and Space Administration	5, LIX; 14, V
Federal Acquisition Regulation	48, 18
National Agricultural Library	7, XLI
National Agricultural Statistics Service	7, XXXVI
National Archives and Records Administration	5, LXVI; 36, XII
Information Security Oversight Office	32, XX
National Bureau of Standards	15, II
National Capital Planning Commission	1, IV
National Commission for Employment Policy	1, IV
National Commission on Libraries and Information Science	45, XVII
National and Community Service, Corporation for	45, XXV
National Council on Disability	34, XII
National Credit Union Administration	12, VII
National Drug Control Policy, Office of	21, III
National Foundation on the Arts and the Humanities	45, XI
National Highway Traffic Safety Administration	23, II, III; 49, V
National Imagery and Mapping Agency	32, I
National Indian Gaming Commission	25, III
National Institute for Literacy	34, XI
National Institute of Standards and Technology	15, II
National Labor Relations Board	5, LXI; 29, I
National Marine Fisheries Service	50, II, IV
National Mediation Board	29, X
National Oceanic and Atmospheric Administration	15, IX; 50, II, III, IV, VI
National Park Service	36, I
National Railroad Adjustment Board	29, III
National Railroad Passenger Corporation (AMTRAK)	49, VII
National Science Foundation	5, XLIII; 45, VI
Federal Acquisition Regulation	48, 25
National Security Council	32, XXI
National Security Council and Office of Science and Technology Policy	47, II
National Telecommunications and Information Administration	15, XXIII; 47, III
National Transportation Safety Board	49, VIII
National Weather Service	15, IX
Natural Resources Conservation Service	7, VI
Navajo and Hopi Indian Relocation, Office of	25, IV
Navy Department	32, VI
Federal Acquisition Regulation	48, 52
Neighborhood Reinvestment Corporation	24, XXV
Northeast Dairy Compact Commission	7, XIII
Nuclear Regulatory Commission	5, XLVIII; 10, I
Federal Acquisition Regulation	48, 20
Occupational Safety and Health Administration	29, XVII
Occupational Safety and Health Review Commission	29, XX
Offices of Independent Counsel	28, VI
Operations Office	7, XXVIII
Overseas Private Investment Corporation	5, XXXIII; 22, VII
Panama Canal Commission	48, 35
Panama Canal Regulations	35, I
Patent and Trademark Office	37, I
Payment From a Non-Federal Source for Travel Expenses	41, 304
Payment of Expenses Connected With the Death of Certain Employees	41, 303
Peace Corps	22, III
Pennsylvania Avenue Development Corporation	36, IX
Pension and Welfare Benefits Administration	29, XXV
Pension Benefit Guaranty Corporation	29, XL
Personnel Management, Office of	5, I, XXXV; 45, VIII
Federal Acquisition Regulation	48, 17
Federal Employees Group Life Insurance Federal Acquisition Regulation	48, 21

Agency	CFR Title, Subtitle or Chapter
Federal Employees Health Benefits Acquisition Regulation	48, 16
Postal Rate Commission	5, XLVI; 39, III
Postal Service, United States	5, LX; 39, I
Postsecondary Education, Office of	34, VI
President's Commission on White House Fellowships	1, IV
Presidential Commission on the Assignment of Women in the Armed Forces	32, XXIX
Presidential Documents	3
Prisons, Bureau of	28, V
Productivity, Technology and Innovation, Assistant Secretary	37, IV
Public Contracts, Department of Labor	41, 50
Public and Indian Housing, Office of Assistant Secretary for	24, IX
Public Health Service	42, I
Railroad Retirement Board	20, II
Reclamation, Bureau of	43, I
Refugee Resettlement, Office of	45, IV
Regional Action Planning Commissions	13, V
Relocation Allowances	41, 302
Research and Special Programs Administration	49, I
Rural Business-Cooperative Service	7, XVIII, XLII
Rural Development Administration	7, XLII
Rural Housing Service	7, XVIII, XXXV
Rural Telephone Bank	7, XVI
Rural Utilities Service	7, XVII, XVIII, XLII
Saint Lawrence Seaway Development Corporation	33, IV
Science and Technology Policy, Office of	32, XXIV
Science and Technology Policy, Office of, and National Security Council	47, II
Secret Service	31, IV
Securities and Exchange Commission	17, II
Selective Service System	32, XVI
Small Business Administration	13, I
Smithsonian Institution	36, V
Social Security Administration	20, III; 48, 23
Soldiers' and Airmen's Home, United States	5, XI
Special Counsel, Office of	5, VIII
Special Education and Rehabilitative Services, Office of	34, III
State Department	22, I
Federal Acquisition Regulation	48, 6
Surface Mining and Reclamation Appeals, Board of	30, III
Surface Mining Reclamation and Enforcement, Office of	30, VII
Surface Transportation Board	49, X
Susquehanna River Basin Commission	18, VIII
Technology Administration	15, XI
Technology Policy, Assistant Secretary for	37, IV
Technology, Under Secretary for	37, V
Tennessee Valley Authority	5, LXIX; 18, XIII
Thrift Depositor Protection Oversight Board	12, XV
Thrift Supervision Office, Department of the Treasury	12, V
Trade Representative, United States, Office of	15, XX
Transportation, Department of	5, L
Coast Guard	33, I; 46, I; 49, IV
Commercial Space Transportation	14, III
Contract Appeals, Board of	48, 63
Emergency Management and Assistance	44, IV
Federal Acquisition Regulation	48, 12
Federal Aviation Administration	14, I
Federal Highway Administration	23, I, II; 49, III
Federal Railroad Administration	49, II
Federal Transit Administration	49, VI
Maritime Administration	46, II
National Highway Traffic Safety Administration	23, II, III; 49, V
Research and Special Programs Administration	49, I
Saint Lawrence Seaway Development Corporation	33, IV
Secretary of Transportation, Office of	14, II; 49, Subtitle A
Surface Transportation Board	49, X

Agency	CFR Title, Subtitle or Chapter
Transportation, Office of	7, XXXIII
Travel Allowances	41, 301
Treasury Department	5, XXI; 17, IV
Alcohol, Tobacco and Firearms, Bureau of	27, I
Community Development Financial Institutions Fund	12, XVIII
Comptroller of the Currency	12, I
Customs Service, United States	19, I
Engraving and Printing, Bureau of	31, VI
Federal Acquisition Regulation	48, 10
Federal Law Enforcement Training Center	31, VII
Fiscal Service	31, II
Foreign Assets Control, Office of	31, V
Internal Revenue Service	26, I
International Investment, Office of	31, VIII
Monetary Offices	31, I
Secret Service	31, IV
Secretary of the Treasury, Office of	31, Subtitle A
Thrift Supervision, Office of	12, V
Truman, Harry S. Scholarship Foundation	45, XVIII
United States and Canada, International Joint Commission	22, IV
United States and Mexico, International Boundary and Water Commission, United States Section	22, XI
United States Enrichment Corporation	10, XI
Utah Reclamation Mitigation and Conservation Commission	43, III
Veterans Affairs Department	38, I
Federal Acquisition Regulation	48, 8
Veterans' Employment and Training, Office of the Assistant Secretary for	41, 61; 20, IX
Vice President of the United States, Office of	32, XXVIII
Vocational and Adult Education, Office of	34, IV
Wage and Hour Division	29, V
Water Resources Council	18, VI
Workers' Compensation Programs, Office of	20, I
World Agricultural Outlook Board	7, XXXVIII

Redesignation Table I

At 55 FR 39393, Sept. 27, 1990, RUS amended 7 CFR chapter XVII by redesignating, reorganizing, adding and reserving certain parts. For the convenience of the user, a redesignation table follows:

Old part or section	New part or section
Rural Development Regulation	
1709	1703.
Electric Regulations	
1710 Subparts A–B [Reserved.	Removed.
1710 Subpart C	1714 Subpart D.
1710.50	1714.150.
1710.51	1714.151.
1710.52	1714.152.
1710.53	1714.152.
1710.54	1714.153.
1710.55	1714.155.
Part 1711	1721 Subpart A.
1711.1	1721.1.
1715 Subpart A [Reserved]	Removed.
1715 Subpart B	1717 Subpart N.
1715.20	1717.650.
1715.21	1717.651.
1715.22	1717.652.
1715.23	1715.653.
1715.24	1717.654.
1715.25	1717.655.
1715.26	1717.656.
1715.27	1717.657.
1715.28	1717.658.
1729 Subpart A–B [Reserved]	Removed.
Part 1729 Subpart C	Part 1724 Subpart E.
1729.6	1724.41.
1729.7–1729.9	1724.42–1724.44.
1729.10	1724.45.
Part 1735	Part 1726 Subpart G.
1735.1	1726.300.
Part 1736	Part 1728.
Telephone Regulations	
1745 Subpart A	1735 Subpart A.
1745.1	Removed.
1745.2	1735.2.
1745.2(a)	1735.2(e).
1745.2(b)	1735.2(g).
1745.2(c)	1735.2(j).
1745.2(d)	1735.2(m).
1745.2(e)	1735.2(s).
1745.2(f)	1735.2(u).
1745.2(g)	1735.2(v).
1745.3	1735.3.
1745 Subpart B	1735 Subpart B.
1745 Subpart C	1735 Subpart C.
1745 Subpart D	1735 Subpart D.
1745 Subpart E	1735 Subpart E.
Part 1747	1744 Subpart B.
1747.1	1744.20.
1747.2	1744.21.
1747.10	1744.30.
1747.20	1744.40.
1747.30	1744.50.
1749.1	1737.1(a).
1749.2	1737.2.
1749.2(a)	1737.2(b).
1749.2(b)	1737.2(c).
1749.2(c)	1737.2(e).
1749.2(d)	1737.2(h).
1749.2(e)	1737.2(i).
1749.2(f)	1737.2(j).
1749.2(g)	1737.2(k).
1749.2(h)	1737.2(p).
1749.2(i)	1737.2(r).
1749.3	1737.3.
1749 Subpart B	1737 Subpart B.
1749 Subpart C	1737 Subpart C.
1749 Subpart D	1737 Subpart D.
1749 Subpart E	1737 Subpart E.
1750.1(a)	1735.1(b).
1750.1(b)	1735.1(c).
1750.2	1735.1(d).
1750.3(a)	1735.2(a).
1750.3(b)	1735.2(b).
1750.3(c)	1735.2(c).
1750.3(d)	1735.2(d).
1750.3(e)	1735.2(e).
1750.3(f)	1735.2(f).
1750.3(g)	1735.2(g).
1750.3(h)	1735.2(h).
1750.3(i)	1735.2(i).
1750.3(j)	1735.2(k).
1750.3(k)	1735.2(l).
1750.3(l)	1735.2(m).
1750.3(m)	1735.2(n).
1750.3(n)	1735.2(o).
1750.3(o)	1735.2(p).
1750.3(p)	1735.2(q).
1750.3(q)	1735.2(r).
1750.3(r)	1735.2(s).
1750.3(s)	1735.2(t).
1750.3(t)	1735.2(u).
1750.4	1735.3.
1750 Subpart B	1735 Subpart F.
1750.10	1735.60.
1750.11	1735.61.
1750.12	1735.62.
1750 Subpart C	1735 Subpart G.
1750.20	1735.70.
1750.21	1735.71.
1750.22	1735.72.
1750.23	1735.73.
1750.24	1735.74.
1750.25	1735.75.
1750.26	1735.76.
1750.27	1735.77.
1750 Subpart D	1735 Subpart H.
1750.30	1735.80.
1750 Subpart E	1735 Subpart I.
1750.40	1735.90.
1750.41	1735.91.
1750.42	1735.92.
1750.43	1735.93.
1750.44	1735.94.
1750.45	1735.95.
1750 Subpart F	1735 Subpart J.
1750.50	1735.100.
1750.51	1735.101.
1751.1(a)	1737.1(b).
1751.1(b)	1737.1(c).
1751.2(a)	1737.2(a).
1751.2(b)	1737.2(b).
1751.2(c)	1737.2(d).
1751.2(d)	1737.2(e).
1751.2(e)	1737.2(f).

Redesignation Table I

Old part or section	New part or section
1751.2(f)	1737.2(g).
1751.2(g)	1737.2(j).
1751.2(h)	1737.2(k).
1751.2(i)	1737.2(l).
1751.2(j)	1737.2(m).
1751.2(k)	1737.2(n).
1751.2(l)	1737.2(o).
1751.2(m)	1737.2(p).
1751.2(n)	1737.2(q).
1751.2(o)	1737.2(s).
1751 Subpart B	1737 Subpart F.
1751.10	1737.50.
1751.11	1737.51.
1751.12–1751.19	1737.52–1737.59.
1751 Subpart C	1737 Subpart G.
1751.20	1737.60.
1751.21	1737.61.
1751.22–1751.29	1737.62–1737.69.
1751 Subpart D	1737 Subpart H.
1751.30	1737.70.
1751.31–1751.39	1737.71–1737.79.
1751 Subpart E	1737 Subpart I.
1751.40	1737.80.
1751.41–1751.49	1737.81–1737.89.
1751 Subpart F	1737 Subpart J.
1751.50	1737.90.
1751.51	1737.91.
1751.52	1737.92.
1751.53–1751.59	1737.93–1737.99.
1751 Subpart G	1737 Subpart K.
1751.60	1737.100.
1751.61	1737.101.
1751.62–1751.69	1737.102–1737.109.
Part 1754	1744 Subpart C.
1754.1	1744.60.
1754.2	1744.61.
1754.3	1744.62.
1754.4	1744.63.
1754.5	1744.64.
1754.6	1744.65.
1754.7	1744.66.
1754.8	1744.67.
1754.9	1744.68.
1762.01	1755.93.
Part 1763	1753 Subpart B.
1763.1	1753.15.
1763.1	1753.15(a).
1763.2	1753.15(b).
1763.3	1753.15(c).
1763.4	1753.15(d).
1763.5	1753.15(e).
Subpart B	1753.16.
1763.20	1753.16(a).
1763.21	1753.16(b).
1763.22	1753.16(c).
Subpart C	1753.17.
1763.40	1753.17(a).
1763.41	1753.17(b).
1763.42	1753.17(c).
1763.43	1753.17(d).
1763.44	1753.17(e).
1763.45	1753.17(f).
1763.46–1763.99	1753.18–1753.20.
1765.1	1753.1.
1765.2	1753.2.
1765.3	1753.3.
1765.4	1753.4.
1765.5	1753.5.
1765.6	1753.6.
1765.7	1753.7.
1765.8	1753.8.
1765.9	1753.9.
1765.10	1753.10.
1765.11	1753.11.
1765.12–1765.14	1753.12–1753.14.
1765 Subpart B	1753 Subpart D.
1765.15	1753.25.
1765.16	1753.26.
1765.17	1753.27.
1765.18	1753.28.
1765.19	1753.29.
1765.20	1753.30.
1765.21–1765.25	1753.31–1753.35.
1765 Subpart C	1753 Subpart E.
1765.26	1753.36.
1765.27	1753.37.
1765.28	1753.38.
1765.29	1753.39.
1765.30–1765.35	1753.40–1753.45.
1765 Subpart D	1753 Subpart F.
1765.36	1753.46.
1765.37	1753.47.
1765.38	1753.48.
1765.39	1753.49.
1765.40–1765.45	1753.50–1753.55.
1765 Subpart E	1753 Subpart G.
1765.46	1753.56.
1765.47	1753.57.
1765.48	1753.58.
1765.49–1765.55	1753.59–1753.65.
1765 Subpart F	1753 Subpart H.
1765.56	1753.66.
1765.57	1753.67.
1765.58	1753.68.
1765.59–1765.65	1753.69–1753.75.
1765 Subpart G	1753 Subpart I.
1765.66	1753.76.
1765.67	1753.77.
1765.68	1753.78.
1765.69	1753.79.
1765.70	1753.80.
1765.71	1753.81.
1765.72	1753.82.
1765.73–1765.80	1753.83–1753.90.
1765 Subpart H	1753 Subpart J.
1765.81	1753.91.
1765.82	1753.91.
1765.83	1753.93.
1765.84	1753.94.
1765.85	1753.95.
1765.86	1753.96.
1765.87–1765.99	1753.97–1753.99.
Part 1772	Part 1755.
1772.3	1755.3.
1772.97	1755.97.
1772.98	1755.98.
1772.370	1755.370.
1772.397	1755.397.
1789	1773.

Redesignation Table II

At 55 FR 49249, Nov. 27, 1990, RUS combined parts 1784, 1786, and 1787 into subparts of new part 1786. For the convenience of the user, a redesignation table follows for the parts, subparts, and sections redesignated.

Old part or section	New part or section
1784	1786 subpart C
1784.1	1786.50
1784.2	1786.51
1784.3	1786.52
1784.4	1786.53
1784.5	1786.54
1784.6	1786.55
1784.7	1786.56
1784.8	1786.57
1784.9	1786.58
1784.10	1786.59
1784.11	1786.60
1784.12	1786.61
1786	1786 subpart B
1786.1	1786.25
1786.2	1786.26
1786.3	1786.27
1786.4	1786.28
1786.5	1786.29
1786.6	1786.30
1786.7	1786.31
1786.8	1786.32
1786.9	1786.33
1786.10	1786.34
1786.11	1786.35
1786.12	1786.36
1786.13	1786.37
1786.14	1786.38
1787	1786 subpart D
1787.1	1786.75
1787.2	1786.76
1787.3	1786.77
1787.4	1786.78
1787.5	1786.79
1787.6	1786.80
1787.7	1786.81
1787.8	1786.82
1787.9	1786.83
1787.10	1786.84
1787.11	1786.85
1787.12	1786.86

List of CFR Sections Affected

All changes in this volume of the Code of Federal Regulations which were made by documents published in the FEDERAL REGISTER since January 1, 1986, are enumerated in the following list. Entries indicate the nature of the changes effected. Page numbers refer to FEDERAL REGISTER pages. The user should consult the entries for chapters and parts as well as sections for revisions.

For the period before January 1, 1986, see the ''List of CFR Sections Affected, 1949–1963, 1964–1972, and 1973–1985'' published in seven separate volumes.

1986

7 CFR

51 FR Page

Chapter XVII

1702 Revised 39739
1736 Authority citation revised 45451
1736.97 Table amended 45451
1747 Added 32430
1772 Authority citation revised 19824
1772.97 Table amended 19824
1784 Added; interim 46999
1788 Added 25855
1789 Added 2790

Chapter XVIII

1806 Authority citation revised 17921
1806.2 (d)(1)(iii) revised 17921
1809 Authority citation revised 13439
1809.1 Introductory text, (b), and (c) revised; interim 13440
1809.2 Revised; interim 13440
1809.3 (b)(1)(i) and (vi) and (c) revised; interim 13440
1809.4 Heading, introductory text, (a) introductory text, (b)(1)(i), (c) introductory text and (1), (d), and (e) revised; interim 13440
1809.8 Revised; interim 13441
1822 Authority citation revised 4135, 6732
Technical correction 17922
1822.21 Amendment confirmed 6393
1822.268 (a) revised 6733

7 CFR—Continued

51 FR Page

Chapter XVIII—Continued

1822.270 (c) and (d) amended 6733
1822.275 (c) revised 4135
1823 Technical correction 17922
1823.251—1823.289 (Subpart I) Authority citation revised 6733
1823.256 (d) revised 6733
1823.401—1823.418 (Subpart N) Authority citation revised 6733
1823.401 Amended 6733
1823.406 Amended 6733
1864.1 Revised; eff. 1–20–87 45432
1872 Removed 4135
1872.23 Introductory text revision confirmed 6393

1987

7 CFR

52 FR Page

Chapter XVI

1610.5 Existing text designated as (a); (b) added 43553

Chapter XVII

1736 Authority citation revised 22289
1736.97 (b) table revised 22289
(b) table amended 48799
1772 Authority citation revised 1182
1772.97 Table amended 1182
1786 Added 1436
1787 Added; interim 2395

Chapter XVIII

1804 Removed 19283

7 CFR—Continued

52 FR Page

Chapter XVIII—Continued

1806.25 (a)(2) introductory text revised 8002
1807.1 (a) revised 26132
1822 Authority citation revised 19283
1822.21—1822.26 (Subpart B) Exhibit A amended 8002
1822.267 (l)(2) introductory text amended 8002
(e) revised 19283
1822.271 (b)(3)(v) revised 19283
1863.1 Revised 26132
1864.2 (a)(5) revised 26132
1866.3 (b)(1) introductory text and (2) introductory text revised 26132

1988

7 CFR

53 FR Page

Chapter XVI

1610 Authority citation revised 1744
Interest rate determination 42938
Interest rate determination corrected 44173
1610.5 (b) removed; (a) designation removed; interim 6970
1610.9 Added; interim 1744
1610.10 Added; interim 6970
Revised 36783
(b)(1) corrected 39014
1610.11 Added; interim 6971
Revised 36784

Chapter XVII

1710 Added 40719
1736 Authority citation revised 39229
1736.97 (b) amended 39229, 44176
1762 Added 15546
1786 Revised; interim 2469
1787.3 Amended 37733
1787.6 (a)(2) revised; (c) introductory text amended; (c) (4), (5), and (6) removed; (c) (7), (8) and (9) redesignated as (c) (4), (5), and (6); new (e) added 37733
1787.9 (a)(6) revised 37733

Chapter XVIII

1809 Authority citation added 35669
1809.1—1809.8 (Subpart A) Authority citation removed 35669

7 CFR—Continued

53 FR Page

Chapter XVIII—Continued

1809.1 Introductory text and (b) revised; interim 35669
1809.4 (b) revised; interim 35669
1823 Authority citation revised 26588
1823.275 (b)(1)(ii) revised 26588
1823.405 Revised 7332
1864 Authority citation revised 26588
1864.1 Revised 13099
1864.2 (d), (f), (h)(2), (j), and (l) amended 13099
(c), (f), and (j) amended 36955
1864.3 (b)(1)(ii) revised 13099
1864.5 Amended 36955
1864.7 (a) introductory text, (1)(ii), and (3) amended 13099
1864.8 Heading and introductory text amended 13099
1864.9 Introductory text, (a) and (b) amended 13099
1864.10 (a) amended; (d)(1) introductory text revised 13099
(d)(1)(i) and (2) amended 36955
1864.12 (a) amended 13099
(b)(2) amended 36955
1864.15 Heading, introductory text, (a) introductory text, (1), and (3), (b)(1), and (c) introductory text and (1) amended 13099
(b)(1) revised 26588
1864.16 Heading, introductory text and (b) amended 36955
1864.17 (a)(1) amended 13099
(a) amended 36955
1864.19 (b) amended 13099
(c) amended 36955
1864 Exhibit B amended 36955

1989

7 CFR

54 FR Page

Chapter XVI

1610 Interest rate determination 45729
Interest rate determination tables corrected 47861
1610.8 Revised 21047
Correctly revised 43415

Chapter XVII

1700 Authority citation revised 6867
1700.3c Added 6867

7 CFR—Continued

54 FR Page

Chapter XVII—Continued

1709 Added 6870
1715 Added 27325
1735 Added 5926
1745 Added 13351
1745.2 (g) corrected 16194
1745.32 (b) and (i)(3) corrected 16194
1749 Added 13356
1749.32 (b) corrected 16194
1749.42 (a)(3) corrected 16194
1750 Added 14626
1754 Added 12186
1763 Added 3984
1765 Added 39267
Technical correction 41713
1772 Authority citation revised; section authority citations removed 20518
Sectional authority citations removed 34141
1772.97 Table amended 4756, 20518, 34141
1785 Authority citation revised 13669
1785.1—1785.17 Designated as (Subpart A) 13669
1785.17 Correctly designated 17856
1785.66—1785.70 (Subpart B) Added 13669
1785.70 (a) correctly revised 17703

Chapter XVIII

1806.1—1806.6 (Subpart A) Exhibit B removed 35869
1806.2 (b)(4) amended 35869
1806.4 (a)(2) introductory text revised; (a)(2)(i) amended 35869
1806.1—1806.6 (Subpart A) Exhibit B Removed 35869
1807.1 (e) amended 14334
1809.1 (b) amended 8523
1822.21—1822.26 (Subpart B) and Exhibit A Removed 6873
1822.271 (e) table amended 29330
1823 Authority citation added 29330
Authority citation revised 39726
1823.51—1823.67 (Subpart B) Removed 47195
1823.221—1823.238 (Subpart H) Removed 47196
1823.251—1823.289 (Subpart I) Removed 47196
1823.275 (b)(1)(ii) revised 39726
1823.401—1823.418 (Subpart N) Authority citation removed 47196

7 CFR—Continued

54 FR Page

Chapter XVIII—Continued

1823.415 Amended 47196
1823.416 Amended 47196
1823.401—1823.418 (Subpart N) Exhibit A amended 29330, 47196
1864.19 (b) revised 42799
1864 Exhibit B amendment at 53 FR 36955 correctly removed 32953

1990

7 CFR

55 FR Page

Chapter XVI

1610 Interest rate determinations 42555
1610.8 Revised 39397

Chapter XVII

1700 Revised 39596
Authority citation revised 53487
1700.2 (c)(2) revised 53487
1700.21 Heading corrected 42807
1700.32 Revised 53487
1701 Removed 39601
1702 Removed 39601
1703 Redesignated from Part 1709 39394
Nomenclature change 39397
1709 Redesignated as Part 1703 39394
1710 Heading removed 39394
Heading added 39397
1710.50—1710.55 (Subpart C) Redesignated as 1714.150—1714.155 (Subpart D) 39394
1711 Heading removed 39395
1711.1 Redesignated as 1721.1 39395
1712 Heading added 39397
1714 Heading added 39394
Nomenclature change 39397
1714.150—1714.155 (Subpart D) Redesignated from 1710.50—1710.55 (Subpart C) 39394
Heading revised 49249
1715 Heading removed 39394
1715.20—1715.28 (Subpart B) Redesignated as 1717.650—1717.658 (Subpart N) 39394
1717 Added 38646
Nomenclature change 39397
Subparts A, B, and C headings removed 49250
1717.301 (a) corrected 53100
1717.305 (b)(1) corrected 53100
1717.306 (a) and (c) corrected 53100

7 CFR—Continued

55 FR Page

Chapter XVII—Continued

1717.350—1717.356 (Subpart H) Added 38653
1717.650—1717.658 (Subpart N) Redesignated from 1715.20—1715.28 (Subpart B) 39394
Appendix A added 53488
1719 Heading added 39397
1721 Heading added 39394
Nomenclature change 39397
1721.1 Redesignated from 1711.1 39395
1724 Heading added 39395
Nomenclature change 39397
Subpart A heading added 49250
Subpart B heading added 49250
Subpart C heading added 49250
Subpart D heading added 49250
1724.41—1724.45 (Subpart E) Redesignated from 1729.6—1729.10 (Subpart C) 39395
1724.45 (a)(1) revised 53487
1726 Heading added 39395
Nomenclature change 39397
Subpart A heading added 49250
Subpart B heading added 49250
Subpart C heading added 49250
Subpart D heading added 49250
Subpart E heading added 49250
Subpart F heading added 49250
1726.300 (Subpart G) Redesignated from 1735.1 39395
Introductory text revised 53487
1728 Redesignated from Part 1736 and heading revised 39395
Nomenclature change 39397
1728.20 (a) amended 53487
1729 Heading removed 39395
1729.6—1729.10 (Subpart C) Redesignated as 1724.41—1724.45 (Subpart E) 39395
1730 Heading added 39397
1735 Heading removed; new 1735 redesignated from Part 1745 39395
Nomenclature change 39397
1735.1 Redesignated as 1726.300; new 1735.1(b) and (c) redesignated from 1750.1(a) and (b) and new section revised 39395
(a) corrected 41170
1735.3 Redesignated from 1745.3 39395
1735.10—1735.22 (Subpart B) Redesignated from 1745.10—1745.22 (Subpart B) 39395

7 CFR—Continued

55 FR Page

Chapter XVII—Continued

1735.30—1735.32 (Subpart C) Redesignated from 1745.30—1745.32 (Subpart C) 39395
1735.40—1735.47 (Subpart D) Redesignated from 1745.40—1745.47 (Subpart D) 39395
1735.50—1735.52 (Subpart E) Redesignated from 1745.50—1745.52 (Subpart E) 39395
1735.60—1735.62 (Subpart F) Redesignated from 1750.10—1750.12 (Subpart B) 39395
1735.70—1735.77 (Subpart G) Redesignated from 1750.20—1750.27 (Subpart C) 39395
1735.80 (Subpart H) Redesignated from 1750.30 (Subpart D) 39395
1735.90—1735.95 (Subpart I) Redesignated from 1750.40—1750.45 (Subpart E) 39395
1735.100—1735.101 (Subpart J) Redesignated from 1750.50—1750.51 (Subpart F) 39395
1736 Redesignated as Part 1728 and heading revised 39395
1736.97 (b) amended 8909
1737 Heading redesignated from Part 1749 heading and revised 39396
Nomenclature change 39397
1737.1—1737.3 (Subpart A) Redesignated from 1749.1—1749.3 (Subpart A) 39396
1737.10—1737.11 (Subpart B) Redesignated from 1749.10—1749.11 (Subpart B) 39396
1737.20—1737.22 (Subpart C) Redesignated from 1749.20—1749.22 (Subpart C) 39396
Table corrected 41170
1737.30—1737.32 (Subpart D) Redesignated from 1749.30—1749.32 (Subpart D) 39396
1737.40—1737.42 (Subpart E) Redesignated from 1749.40—1749.42 (Subpart E) 39396
1737.50—1737.51 (Subpart F) Redesignated from 1751.10—1751.11 (Subpart B) and heading revised 39396
1737.60—1737.61 (Subpart G) Redesignated from 1751.20—1751.21 (Subpart C) and heading revised 39396

7 CFR—Continued

55 FR Page

Chapter XVII—Continued

1737.70 (Subpart H) Redesignated from 1751.30 (Subpart D) and heading 39396
1737.80 (Subpart I) Redesignated from 1751.40 (Subpart E) 39396
1737.90—1737.92 (Subpart J) Redesignated from 1751.50—1751.52 (Subpart F) and heading revised 39396
1737.100—1737.101 (Subpart K) Redesignated from 1751.60—1751.61 (Subpart G) and heading revised 39396
1739 Heading added 39397
1741 Heading added 39397
1744 Added 39396
Nomenclature change 39397
Heading corrected 42845
1744.20 Redesignated from 1747.1 39396
1744.21 Redesignated from 1747.2 39396
1744.30 Redesignated from 1747.10 39396
1744.40 Redesignated from 1747.20 39396
1744.50 Redesignated from 1747.30 39396
1744.60—1744.68 (Subpart C) Redesignated from 1754.1—1754.9 39396
1745 Redesignated as Part 1735 39395
1745.1 Removed 39395
Technical correction 41170
1745.2 Heading, introductory text and (a) through (g) redesignated as 1735.2 heading, introductory text, (e), (g), (j), (m), (s). (u) and (v) 39395
1745.3 Redesignated as 1735.3 39395
1745.10—1745.22 (Subpart B) Redesignated as 1735.10—1735.22 (Subpart B) 39395
1745.30—1745.32 (Subpart C) Redesignated as 1735.30—1735.32 (Subpart C) 39395
1745.40—1745.47 (Subpart D) Redesignated as 1735.40—1735.47 (Subpart D) 39395
1745.50—1745.52 (Subpart E) Redesignated as 1735.50—1735.52 (Subpart E) 39395
1746 Heading added 39397
1747 Removed in part 39396

7 CFR—Continued

55 FR Page

Chapter XVII—Continued

1747.1 Redesignated as 1744.20 39396
1747.2 Redesignated as 1744.21 39396
1747.10 Redesignated as 1744.30 39396
1747.20 Redesignated as 1744.40 39396
1747.30 Redesignated as 1744.50 39396
1748 Heading added 39397
1749 Heading redesignated as Part 1737 heading and revised 39396
Table corrected 41170
1749.1—1749.3 (Subpart A) Redesignated as 1737.1—1737.3 (Subpart A) 39396
1749.10—1749.11 (Subpart B) Redesignated as 1737.10—1737.11 (Subpart B) 39396
1749.20—1749.22 (Subpart C) Redesignated as 1737.20—1737.22 (Subpart C) 39396
1749.30—1749.32 (Subpart D) Redesignated as 1737.30—1737.32 (Subpart D) 39396
1749.40—1749.42 (Subpart E) Redesignated as 1737.40—1737.42 (Subpart E) 39396
1750 Removed in part 39395
1750.1 (a) and (b) redesignated as 1735.1 (b) and (c) 39395
1750.2 Redesignated as 1735.1 (d) 39395
1750.3 (a) through (d), (f), (h) through (k) and (m) through (q) and (s) redesignated as 1735.2 (a) through (d), (f), (h), (i), (k), (l), (n) through (r), (s), and (t) 39395
1750.10—1750.12 (Subpart B) Redesignated as 1735.60—1735.62 (Subpart F) 39395
1750.20—1750.27 (Subpart C) Redesignated as 1735.70—1735.77 (Subpart G) 39395
1750.30 (Subpart D) Redesignated as 1735.80 (Subpart H) 39395
1750.40—1750.45 (Subpart E) Redesignated as 1735.90—1735.95 (Subpart I) 39395
1750.50—1750.51 (Subpart F) Redesignated as 1735.100—1735.101 (Subpart J) 39395
1751 Added 5440
Removed in part 39396

7 CFR—Continued

55 FR Page

Chapter XVII—Continued
Heading added 39397
Heading corrected 42845
1751.1 (a) and (b) redesignated as 1737.1 (b) and (c) 39396
1751.2 (a), (c), (e), (f), (i) through (l), (n), and (o) redesignated as 1737.2 (a), (d), (f), (g), (l) through (o), (q), and (s) 39396
1751.10—1751.11 (Subpart B) Redesignated as 1737.50—1737.51 (Subpart F) and heading revised 39396
1751.20—1751.21 (Subpart C) Redesignated as 1737.60—1737.61 (Subpart G) and heading revised 39396
1751.30 (Subpart D) Redesignated as 1737.70 (Subpart H) and heading revised 39396
1751.40 (Subpart E) Redesignated as 1737.80 (Subpart I) 39396
1751.50—1751.52 (Subpart F) Redesignated as 1737.90—1737.92 (Subpart J) and heading revised 39396
1751.60—1751.61 (Subpart G) Redesignated as 1737.100—1737.101 (Subpart K) and heading revised 39396
1753 Heading redesignated from Part 1765 heading and revised 39396
Nomenclature change 39397
1753.1—1753.11 (Subpart A) Redesignated from 1765.1—1765.11 (Subpart A) 39396
1753.15—1753.17 (Subpart B) Heading revised 39397
1753.25—1753.30 (Subpart D) Redesignated from 1765.15—1765.20 (Subpart B) 39397
1753.36—1753.39 (Subpart E) Redesignated from 1765.26—1765.29 (Subpart C) 39397
1753.46—1753.49 (Subpart F) Redesignated from 1765.36—1765.39 (Subpart D) 39397
1753.47 (b)(5) revised 53488
1753.56—1753.58 (Subpart G) Redesignated from 1765.46—1765.48 (Subpart E) 39397
1753.66—1753.68 (Subpart H) Redesignated from 1765.56—1765.58 (Subpart F) 39397

7 CFR—Continued

55 FR Page

Chapter XVII—Continued
1753.76—1753.82 (Subpart I) Redesignated from 1765.66—1765.72 (Subpart G) 39397
1753.81 (a) revised 53488
1753.91—1753.96 (Subpart J) Redesignated from 1765.81—1765.86 (Subpart H) 39397
1753 Appendixes A through F redesignated from part 1765 appendixes A through F 39396
1754 Removed in part 39396
1754.1—1754.9 Redesignated as 1744.60—1744.68 (Subpart C) 39396
1755 Nomenclature change 39397
1755.3 Redesignated from 1772.3 39397
1755.93 Redesignated from 1762.01 39397
1755.97 Redesignated from 1772.97 39397
1755.98 Redesignated from 1772.98 39397
1755.370 Redesignated from 1772.370 39397
1755.397 Redesignated from 1772.397 39397
1757 Heading added 39397
1762 Heading removed 39397
1762.01 Table amended 133, 2510
Redesignated as 1755.93 39397
1763 Removed in part 39396
1763.1 Heading, (a) through (c), (d)(1) and (2), and (e) redesignated as 1753.15 heading, (a)(1) through (3), (4)(i) and (ii) and (5) 39397
1763.2 Introductory text and (a) through (m) redesignated as 1753.15 (b) introductory text and (1) through (13) 39397
1763.3 Redesignated as 1753.15 (c) 39397
1763.4 (a) and (b) redesignated as 1753.15 (d)(1) and (2) 39397
1763.5 (a) and (b) redesignated as 1753.15 (e)(1) and (2) 39397
1763.20—1763.22 (Subpart B) Heading redesignated as 1753.16 heading 39397
1763.20 Redesignated as 1753.16 (a) 39397
1763.21 (a) through (e) redesignated as 1753.16 (b)(1) through (5) 39397

7 CFR—Continued

55 FR Page

Chapter XVII—Continued

1763.22 (a) through (c) redesignated as 1753.16 (c)(1) through (3) 39397
1763.40—1763.45 (Subpart C) Redesignated as 1753.17 heading 39397
1763.40 (a) and (b) redesignated as 1753.17 (a)(1) and (2) 39397
1763.41 (a) introductory text, (1) and (2), (i) through (iv) and (b) redesignated as 1753.17 (b)(1) introductory text, (i), (ii), and (A) through (D) and (b)(2) 39397
1763.42 Redesignated as 1753.17 (c) 39397
1763.43 (a) and (b) redesignated as 1753.17 (d)(1) and (2) 39397
1763.44 (a) and (b) redesignated as 1753.17 (e)(1) and (2) 39397
1763.45 (a) through (d) redesignated as 1753.17 (f)(1) through (4) 39397
1765 Heading redesignated as Part 1753 heading revised 39396
1765.1—1765.11 (Subpart A) Redesignated as 1753.1—1753.11 (Subpart A) 39396
1765.15—1765.20 (Subpart B) Redesignated as 1753.25—1753.30 (Subpart D) 39397
1765.26—1765.29 (Subpart C) Redesignated as 1753.36—1753.39 (Subpart E) 39397
1765.36—1765.39 (Subpart D) Redesignated as 1753.46—1753.49 (Subpart F) 39397
1765.46—1765.48 (Subpart E) Added 3572
Redesignated as 1753.56—1753.58 (Subpart G) 39397
1765.56—1765.58 (Subpart F) Redesignated as 1753.66—1753.68 (Subpart H) 39397
1765.66—1765.72 (Subpart G) Added 3573
Redesignated as 1753.76—1753.82 (Subpart I) 39397
1765.81—1765.86 (Subpart H) Added 3574
Redesignated as 1753.91—1753.96 (Subpart J) 39397
1765.86 Correctly designated 41170
1765 Appendix E added 3576

7 CFR—Continued

55 FR Page

Chapter XVII—Continued

Appendixes A through F redesignated as part 1753 appendixes A through F 39396
1767 Heading added 49250
1770 Added 3388
1770.15 Table corrected 17352
Table amended 53488
1772 Redesignated as Part 1755 and heading revised 39397
1772.97 Table amended 42183
1772.98 Added 1792
Table amended 7881
1772.370 Added 1792
(a) corrected 3685
Technical correction 7867
1772.397 Added 7881
1773 Redesignated from Part 1789 and nomenclature change 39397
1784 Removed 49250
1784.1—1784.12 Redesignated as 1786.50—1786.61 (Subpart C); heading added 49250
1785 Heading revised 39397
1786 Authority citation revised 1144
Revised 1145
Heading revised; nomenclature changes 49250
Subpart A heading added 49250
1786.1—1786.14 Redesignated as 1786.25—1786.38 (Subpart B); heading added 49250
1786.3 (a) amended 35426
1786.4 (a)(2), (3) and (f)(2) revised; (a)(4) removed 35426
1786.5 (d) revised 35427
1786.25—1786.38 (Subpart B) Redesignated from 1786.1—1786.14; heading added 49250
1786.30 (a) amended 49250
1786.50—1786.61 (Subpart C) Redesignated from 1784.1—1784.12; heading added 49250
1786.75—1786.86 (Subpart D) Redesignated from 1787.1—1787.12; heading added 49250
1786.80 (a) introductory text amended 49250
1787 Removed 49250
1787.1—1787.12 Redesignated as 1786.75—1786.86 (Subpart D); heading added 49250
1789 Redesignated as Part 1773 and nomenclature change 39397
1794 Heading revised 39397

7 CFR—Continued

55 FR Page

Chapter XVIII

1809.1 Regulation at 53 FR 35669 confirmed 21524
1809.4 Regulation at 53 FR 35669 confirmed 21524
1822.232 (h) and (i) revised 26641
1822.233 (a)(1) amended 26641
1823.401—1823.418 (Subpart N) Exhibit A nomenclature change 13503

1991

7 CFR

56 FR Page

Chapter XVI

1600 Added 49134
1600.1—1600.8 Undesignated center heading corrected 56275
1610 Authority citation revised 26596
Interest rate determination 56461
1610.5 Revised 26596
1610.6 Revised 26596
1610.9 Revised 26596

Chapter XVII

1700 Authority citation revised 2671
1700.23 Revised 2671
1700.30 Revised 25349
1712 Added; interim 42461
1712.65 (a)(2) heading corrected 47832
1712.73 (a) corrected 47832
1712 Appendix A corrected 47832
Appendix A corrected 55205
1717.650—1717.658 (Subpart N) Appendix A corrected 558
1719 Added; interim 42476
1728.97 (b) table amended 1563
1735.2 Amended 26596
1735.10 Amended 26597
1735.17 (b) removed; (c) and (d) redesignated as (b) and (c); new (b)(1) revised 26597
1735.22 (f) and (g) revised 26597
1735.30 (a)(2) revised 26597
1735.32 (a) revised; (d) amended 26597
1735.42 Removed 26598
1735.43 Revised 26598
1735.47 Revised 26598
1735.51 (a)(1) revised 26598
1737.2 Amended 26598
1737.20 Removed 26598

7 CFR—Continued

56 FR Page

Chapter XVII—Continued

1737.21 (b) amended; (c) added 26598
1737.22 Introductory text revised; (a)(17), (18) and (19) added; (b)(5) redesignated as (b)(10); new (b)(5) through (9) added 26599
1737.41 (b) revised; OMB number 26599
(b)(1) corrected 42524
1737.70 (d) through (g) redesignated as (g) through (j); (a) and new (g) revised; (b) and new (h) amended; new (d), (e), (f), (k) and (l) added 26599
1737.80 (a) revised 26600
1737.90 (a)(4) and (8) removed; (a)(5) through (7) redesignated as (a)(4) through (6) 26600
1739 Added; interim 42479
1739.71 (c) corrected 55205
1739 Appendixes A, B and F corrected 47832
Appendix A corrected 55205
1744.66 (b)(4)(iv) revised 26600
1746 Added; interim 42492
1755.93 Table amended 1484
1773 Revised 63360
1786 Authority citation added 37268
1786.95—1786.106 (Subpart E) Added 37268

Chapter XVIII

1806.2 (b)(5) revised 6945
1806.3 (c)(1)(iv) revised 6945
1806.6 Introductory text revised 6945
1806.25 (c)(4) added 6945
1806.28 Added 6946
1807 Authority citation revised 6946
Removed; eff. 1–30–92 67471
1807.2 (f)(3) revised 6946
1810 Authority citation added 11503
1810.1—1810.2 (Subpart A) Heading amended 11503
1810.1 Revised 11503
1810.2 Authority citation removed 11503
1822 Authority citation revised 2202
Authority citation revised 67471
1822.231—1822.245 (Subpart F) Removed 2202
1822.270 (b) revised; eff. 1–30–92 67472

7 CFR—Continued

56 FR Page

Chapter XVIII—Continued
1822.272 Revised 2202
1822.274 (a), (b) and (c)(2) revised; eff. 1–30–92..... 67472
1822.277 Revised; eff. 1–30–92 67472
1822.278 (g) revised; eff. 1–30–92..... 67472
1823.414 (a)(1) introductory text and (2) revised; (a)(1)(i) amended; eff. 1–30–92..... 67472
1823.401—1823.418 (Subpart N) Exhibit A amended; eff. 1–30–92..... 67472
1864 Removed 10147
1890t Removed; eff. 1–30–92 67472

1992

7 CFR

57 FR Page

Chapter XVII
1700 Authority citation revised 6285
1700.1—1700.9 (Subpart A) Revised 6285
1700.24 Revised 6290
1700.25 Revised 6290
1703 Authority citation revised..... 44317
1703.10—1703.66 (Subpart B) Revised..... 44317
1710 Added 1053
1710.2 (a) corrected 4513
1710.6 (a) introductory text and (5) corrected 4513
1710.101 (c) corrected 4513
1710.102 Added 2832
Technical correction..... 5931
1710.104 (b)(2) corrected 4513
1710.105 (c) corrected 4513
1710.112 (b)(3) and (8) corrected 4513
1710.114 (b)(1) corrected 4513
1710.204 (a) corrected 4513
1710.250 (e) corrected 4513
1710.251 (b) and (c) introductory text corrected 4513

Chapter XVIII
1806.4 (b)(1) amended..... 36590
1806.6 (a)(1)(v) and (c)(2) amended 36590
1807 Removal at 56 FR 67471 effective date delayed to 3–31–92 3276

7 CFR—Continued

57 FR Page

Chapter XVIII—Continued
1822.270 Regulation at 56 FR 67472 effective date delayed to 3–31–92 3276
1822.277 Regulation at 56 FR 67472 effective date delayed to 3–31–92 3276
1822.278 Regulation at 56 FR 67472 effective date delayed to 3–31–92 3276
1823.414 Regulation at 56 FR 67472 effective date delayed to 3–31–92 3276
1823.401—1823.418 (Subpart N) Exhibit A regulation at 56 FR 67472 effective date delayed to 3–31–92..... 3276
1863 Removed 36590
1866 Removed 774
1890t Removal at 56 FR 67472 effective date delayed to 3–31–92 3276

1993

7 CFR

58 FR Page

Chapter XVI
1610.1 Amended; interim 66252
1610.2 Redesignated as 1610.3; new 1610.2 added; interim 66252
1610.3 Redesignated as 1610.4; new 1610.3 redesignated from 1610.2; interim..... 66252
1610.4 Redesignated as 1610.5; new 1610.4 redesignated from 1610.3 and revised; interim..... 66252
1610.5 Redesignated as 1610.6; new 1610.5 redesignated from 1610.4; interim..... 66252
1610.6 Removed; new 1610.6 redesignated from 1610.5 and revised; interim..... 66252
1610.11 Revised; interim 66253

Chapter XVII
1703 Authority citation revised..... 11512
Extension of application deadline..... 13195, 67306
1703 (Subpart C) Heading added..... 21639
1703.100—1703.140 (Subpart D) Added 11512
1703.300—1703.313 (Subpart E) Added 21639

7 CFR—Continued

58 FR Page

Chapter XVII—Continued

1710.1 (b)(1), (2) and (c) revised; interim 66262
1710.2 Amended; interim 66262
1710.3 Revised; interim 66263
1710.6 (a) introductory text and (b) revised; interim 66263
1710.50 Revised; interim 66263
1710.51 Revised; interim 66264
1710.100 Revised; interim 66264
1710.101 (c) and (d) redesignated as (f) and (g) and revised; new (c), (d) and (e) added; interim 66264
1710.102 (a) and (b) revised; (d) removed; interim 66264
1710.104 (a) revised; (c) removed; interim 66264
1710.105 (a) revised; interim 66265
1710.106 (a) introductory text and (c) revised; (a)(6) added; interim 66265
1710.109 (c) revised; interim 66265
1710.110 (a), (b) and (c) heading revised; (d) added; interim 66265
1710.115 Revised; interim 66265
1714 Revised; interim 66266
1717.850—1717.859 (Subpart R) Added 53843
1717.900—1717.903 (Subpart S) Added 53851
1728.97 (b) amended 41398
1728.201 Added 41398
1728.202 Added 41406
1735 Authority citation revised 66253
1735.2 Amended; interim 66253
1735.10 Revised; interim 66253
1735.13 (c) amended; (c)(i), (ii) and (iii) redesignated as (c)(1), (2) and (3); (d) added; interim 66253
1735.14 Revised; interim 66253
1735.17 (a) and (b) revised; (c) redesignated as (d); new (c) added; interim 66253
1735.20 (c) revised; interim 66254
1735.21 (a) revised; interim 66254
1735.22 (f) revised; interim 66254
1735.30 Revised; interim 66254
1735.31 Revised; interim 66255
1735.32 (a) revised; (b) through (k) redesignated as (c) through (l); new (b) added; interim 66255
(k) amended; interim 66256

7 CFR—Continued

58 FR Page

Chapter XVII—Continued

1735.74 (a)(14) redesignated as (a)(15); new (a)(14) added; interim 66256
1737 Authority citation revised 66256
1737.2 Amended; interim 66256
1737.11 (h) revised; (i) added; interim 66256
1737.22 (a)(20) added; interim 66256
1737.32 (a), (f)(1)(viii)(A) and (B) amended; (f)(i)(viii)(C) revised; interim 66256
1737.50 (a)(4) removed; (a)(5) redesignated as (a)(6); new (a)(5) added; interim 66256
1737.70 (d) revised; interim 66256
1737.71 Added; interim 66257
1744 Authority citation revised 52641
1744.61 (h) through (l) and (m) redesignated as (i) through (m) and (o); new (h) and (n) added; interim 66257
1744.67 (a) introductory text, (1) and (2) introductory text revised; (e) added; interim 66257
1744.68 (a) revised; interim 66257
1744.200—1744.210 (Subpart E) Added 52642
1751 Added; interim 66257
1753 Authority citation revised 66259
1753.2 Amended; interim 66259
1753.3 (a) introductory text revised; (a)(4) added; interim 66259
1753.15 (b)(3) through (10) and (13) removed; (b)(11) and (12) redesignated as (b)(3) and (4) and revised; interim 66259
1753.66 (d) revised; interim 66259
1755 Authority citation revised 29328, 29338
1755.97 Table amended 29328, 29338, 30938, 41410, 61004
1755.98 Heading and text revised 41410
1755.390 Added 29338
appendix A corrected 32749
1755.522 Added 30938
appendix D corrected 36252
1755.860 Added 61004
1755.890 Added 29328
1767 Added 59825

7 CFR—Continued

58 FR Page

Chapter XVII—Continued
1786.25—1786.49 (Subpart B) Heading revised; interim 51008
1786.150—1786.199 (Subpart F) Added; interim 51008
1786.200—1786.210 (Subpart G) Added; interim 51008
1786.206 (c) corrected 58729
1792 Added 32440

Chapter XVIII
1809 Removed; interim 44750
1822.261 Amended 224
1823.401 Amended 224
1823.401—1823.418 (Subpart N) Exhibit A amended; interim 44752

1994

7 CFR

59 FR Page

Chapter XVI
1600 Authority citation revised 66439
1610 Authority citation revised 66439
Nomenclature change 66439
1610.1 Regulation at 58 FR 66252 confirmed 17464
1610.2 Regulation at 58 FR 66252 confirmed 17464
Amended 66439
1610.3 Regulation at 58 FR 66252 confirmed 17464
1610.4 Regulation at 58 FR 66252 confirmed 17464
1610.5 Regulation at 58 FR 66252 confirmed 17464
1610.6 Regulation at 58 FR 66252 confirmed 17464
1610.11 Regulation at 58 FR 66253 confirmed 17464
1627 Correctly removed; CFR Correction 33641

Chapter XVII
Chapter XVII Heading revised; nomenclature change 66440
1700 Authority citation revised 66439
1700.1 Revised 66440
1700.40—1700.44 (Subpart D) Added 21624
1700.41 Amended 46723
1700.60—1700.61 (Subpart E) Added 21625
1700.70—1700.73 (Subpart F) Added 21625

7 CFR—Continued

59 FR Page

Chapter XVII—Continued
1700.73 (c)(3) removed; (c)(4) redesignated as (c)(3) 46724
1700.90—1700.93 (Subpart G) Added 21626
1700.100—1700.109 (Subpart H) Added 21626
1700.120—1700.132 (Subpart I) Added 21627
1700.124 (b)(10) added 46724
1700.127 (b)(10) added 46724
1700.140—1700.150 (Subpart J) Added 21631
1700.145 (c)(8) added; (d)(12) removed; (d)(13), (14) and (15) redesignated as (d)(12), (13) and (14) 46724
1700.146 (c) amended 46724
1700.147 (b)(5) revised; (b)(6), (7) and (c) amended; (b)(8) added 46724
1700.160—1700.161 (Subpart K) Added 21633
1700.170—1700.173 (Subpart L) Added 21633
1703 Authority citation revised 66439
1703.12 Amended 11706, 53930, 66440
1703.17 (c) added 11706
(d) added 53930
1703.18 Added 11706
(b) and (c) corrected 38341
1703.19 Added 11706
1703.20 Revised 11707
(a)(10) and (11) redesignated as (a)(11) and (12); new (a)(10) added 53930
1703.21 (b) amended; (d) revised 11708
1703.22 Added 11708
(a)(10) corrected 38341
(e) introductory text, (1), (3) and (4) revised 53931
1703.28 (b) revised 11711
1703.30 OMB number 11711
Corrected; OMB number 38341
1703.34 (b)(5)(ii) and (iii) revised; (b)(5)(iv) and (v) added 11711
OMB number 38341
1703.46 (e) removed; (f) through (l) redesignated as (e) through (k); (a) and new (g)(6)(iv) amended 11711
(a), (d) introductory text and (e) amended 38341
(g)(6)(iii) and (h) introductory text amended 38342

7 CFR—Continued

59 FR Page

Chapter XVII—Continued
(g)(7) and (h)(11) added; (h)(10)(iii) amended.....53931
1703.61 (a) and (b) amended 11712
1703.66 (b), (d), (e) and (g) revised; (h), (i) and (j) added 11712
1703.67 Added 11712
1703.68 Added 11712
1703.102 Amended.....66440
1703.302 Amended.....66440
1710 Authority citation revised.....495, 66439
1710.2 (a) amended; interim 495
Amended 66440
1710.3 Revised 66440
1710.7 Added; interim 3984
1710.118 Removed; interim 496
1710.350—1710.364 (Subpart H) Heading revised; sections added; interim 496
1712 Authority citation revised.....66439
1714 Authority citation revised.....66439
1717 Authority citation revised.....66439
1717.302 Amended.....66440
1717.352 Amended.....66440
1717.650—1717.658 (Subpart N) Authority citation revised 66439
1717.851 Amended; interim 3986
1717.852 (a)(1)(ii) amended; (b)(1)(ii)(A) revised; interim 3986
1717.860 Added; interim 3986
1717.904 Added; interim 3987
1719 Authority citation revised.....66439
1721 Authority citation revised.....66439
1724 Authority citation revised.....66439
1726 Authority citation revised.....66439
1726.300 Introductory text amended.....66440
1728 Authority citation revised.....66439
1728.97 (a) amended 66440
1735 Authority citation revised.....66439
1735.2 Regulation at 58 FR 66253 confirmed.....17464
1735.3 Amended.....66441
1735.10 Regulation at 58 FR 66253 confirmed; (b) revised 17464

7 CFR—Continued

59 FR Page

Chapter XVII—Continued
1735.13 Regulation at 58 FR 66253 confirmed.....17464
1735.14 Regulation at 58 FR 66253 confirmed.....17464
1735.17 Regulation at 58 FR 66253 confirmed.....17464
1735.20 Regulation at 58 FR 66254 confirmed.....17464
1735.21 Regulation at 58 FR 66254 confirmed.....17464
1735.22 Regulation at 58 FR 66254 confirmed.....17464
1735.30 Regulation at 58 FR 66254 confirmed.....17464
1735.31 Regulation at 58 FR 66255 confirmed.....17464
1735.32 Regulations at 58 FR 66255 and 66256 confirmed.....17464
1735.46 Existing text designated as (a); (b) through (h) added.....29537
1735.74 Regulation at 58 FR 66256 confirmed.....17464
1737 Authority citation revised.....66439
1737.2 Regulation at 58 FR 66256 confirmed.....17464
1737.3 Amended.....66441
1737.11 Regulation at 58 FR 66256 confirmed.....17464
1737.22 Regulation at 58 FR 66256 confirmed.....17464
1737.32 Regulation at 58 FR 66256 confirmed.....17464
1737.41 (b)(1) revised.....54381
1737.50 Regulation at 58 FR 66256 confirmed.....17464
1737.70 Regulation at 58 FR 66256 confirmed.....17464
1737.71 Regulation at 58 FR 66257 confirmed.....17464
1739 Authority citation revised.....66439
1744 Authority citation revised.....66439
1744.21 Text transfered from 1744.61; amended 43716
1744.40 (a)(3) revised.....43716
1744.61 Regulation at 58 FR 66257 confirmed.....17464
Transfered in part to 1744.21; removed.....43716
1744.67 Regulation at 58 FR 66257 confirmed.....17464

7 CFR—Continued

59 FR Page

Chapter XVII—Continued

1744.68 Regulation at 58 FR 66257 confirmed 17464
1744.201 Amended 66440
1746 Authority citation revised 66439
1751 Authority citation revised 66439
1753 Authority citation revised 66439
1753.2 Regulation at 58 FR 66259 confirmed and amended 17464
1753.3 Regulation at 58 FR 66259 confirmed; (a) introductory text and (4) amended 17464
1753.5 (b)(1) revised 43716
1753.6 (b) revised 43716
1753.7 (f)(4) revised 17679
1753.8 (a)(11)(ii), (12)(i), (b)(2), (3) and (4) revised; (b)(5) removed 43716
1753.9 (a) and (c) revised 43716
1753.15 Regulation at 58 FR 66259 confirmed; (b)(4) amended 17464
1753.16 (b)(3), (4) and (5) redesignated as (b)(4), (5) and (6); new (b)(3) added 43717
1753.17 (c)(1)(i)(B) and (e) revised 43717
1753.25 (f)(4) added 43717
1753.26 (b) introductory text revised; (c) redesignated as (d); new (c) added 43717
1753.29 (a) removed; (b) through (e) redesignated as (a) through (d) 43717
1753.30 (b)(2)(i) and (c)(2) revised 43717
1753.38 (a)(2)(iii) removed; (a)(2)(iv) through (vii) redesignated as (a)(2)(iii) through (vi); (a)(2)(i)(J), new (v) and (c) revised 17679
1753.39 (f)(1)(i) revised 31126
(g) revised 43717
1753.46 (c) added 43717
1753.49 (c)(3) revised 43717
1753.50 Added 43717
1753.66 Regulation at 58 FR 66259 confirmed; (d) amended 17464
1753.68 (d)(3)(iii) revised 43718
1753.78 (a) revised 43718
1753.80 (a) revised; (b) through (g) redesignated as (c) through (h); new (b) added 43718

7 CFR—Continued

59 FR Page

Chapter XVII—Continued

1753 Appendixes A through F revised 43719
1755 Authority citation revised 17681, 66439
1755.93 Table amended 17681, 31126
Introductory text amended 66440
1755.97 Table amended 30507, 34360
Introductory text amended 66440
1755.98 Table amended 53044
Introductory text amended 66440
1755.525 Added 31126
1755.870 Added 30507
(a)(2) table and (h)(3)(i) corrected 34899
1755.900 Added 34360
(m)(4) table, (p)(1)(vii) and (q)(1)(ii) corrected 44795
1755.910 Added 53044
1767 Authority citation revised 66439
1767.10 Amended 66440
1767.18 Amended 27436
1767.19 Amended 27436
1767.41 Amended 27436
1770 Authority citation revised 66439
1773 Authority citation revised 659, 66439
1773.2 Amended 66440
1773.3 (c) revised 659
1773.20 (a) revised 659
1773.21 (b) and (c) revised 659
1773.34 (e)(1)(i) and (2)(i) removed; (e)(1)(ii), (iii), (iv), (2)(ii), (iii) and (iv) redesignated as (e)(1)(i), (ii), (iii), (2)(i), (ii) and (iii) and revised 659
1773.40 Revised 660
1773.45 Revised 660
1773 Appendix C revised 660
1785 Authority citation revised 66439
1786 Authority citation revised 66439
1786.25—1786.38 (Subpart B) Authority citation revised 66439
1786.27 Amended 66440
1786.50—1786.61 (Subpart C) Authority citation revised 66439
1786.51 Amended 66441
1786.75—1786.86 (Subpart D) Authority citation revised 66439
1786.77 Amended 66440
1786.96 Amended 66440
1786.150—1786.170 (Subpart F) Added 13620

7 CFR—Continued

59 FR Page

Chapter XVII—Continued
Authority citation revised 66439
1786.200—1786.210 (Subpart G) Authority citation revised 66439
1786.201 Amended.....66440
1788 Authority citation revised.....66439
1792 Authority citation revised.....66439
1792.102 Amended.....66440
1794 Authority citation revised.....66439
Chapter XVIII
Chapter XVIII Heading revised; nomenclature change; interim 66443

1995

7 CFR

60 FR Page

Chapter XVII
1710.2 Amended 3730
(a) amended; eff. 1–29–96.....67400
1710.7 (d)(1)(vi) removed 3730
Revised; eff. 1–29–96.....67401
1710.103 (b) amended; eff. 1–29–96.....67404
1710.106 (d) redesignated as (e); new (d) and (f) added 3730
1710.110 (c)(1)(ii) revised; (c)(3) added 3730
1710.112 (b)(10) added 3731
1710.114 Revised; eff. 1–29–96 67404
1710.115 (b) revised.....3731
1710.116 Removed 3731
1710.250 (b) and (e) revised; (k) added; eff. 1–29–96 67405
1710.251 (b) revised.....3731
(a) amended; eff. 1–29–96.....67405
1710.252 (b) revised.....3731
(a) amended; eff. 1–29–96.....67405
1710.400—1710.407 (Subpart I) Added 3731
1710.401 OMB number 3732
1712 Removed.....3734
1714.6 (a)(2) revised.....3734
1714.50—1714.59 (Subpart B) Added 3734
1717.600—1717.617 (Subpart M) Added; eff. 1–29–96 67405
1717.650—1717.659 (Subpart N) Revised.....48877

7 CFR—Continued

60 FR Page

Chapter XVII—Continued
1717.850 (a), (b), (f), (g)(1)(ii), (h)(2) and (m) revised; eff. 1–29–96.....67408
1717.851 Amended; eff. 1–29–96 67409
1717.852 (a)(1) introductory text and (ii) amended; (a)(3) through (7) and (b) revised; (a)(8) added; eff. 1–29–96 67409
1717.854 Heading, (a), (b), (c)(1) and (2) revised; (c)(7) removed; (c)(3) through (6) redesignated as (c)(4) through (7); new (c)(3) added; new (c)(6)(vi) and new (c)(7) amended; eff. 1–29–96.....67410
1717.855 Heading and (a) revised; eff. 1–29–96.....67410
1717.856 (d) removed.....3735
Heading, introductory text, (a) introductory text and (c)(3) revised; eff. 1–29–96.....67410
1717.857 (a)(3) and (4)(ii) amended; (a)(5) removed; eff. 1–29–96 67410
1717.860 (e) removed.....3735
(f) redesignated as (e); eff. 1–29–96 67410
1718 Added 36888
1718.50—1718.54 (Subpart B) appendix A amended; eff. 1–29–96.....67410
1718.100—1718.104 (Subpart C) Added; eff. 1–29–96 67410
1719 Removed.....3735
1726 Revised 10155
1726.37 OMB number 10159
1751 Revised 8174
1755 Authority citation revised.....44729
1755.97 Table amended.....5097, 44729, 55992
1755.98 Table amended 1712, 5097
1755.200 Added 5097
(d)(4)(ii) table corrected 9079
1755.390 OMB number 1711
1755.397 Introductory text amended (OMB number) 1711
Revised (OMB number) 44729
1755.522 OMB number 1711

7 CFR—Continued

60 FR Page

Chapter XVII—Continued
(e)(5), (6), (7), (11), (19)(vii), (i)(2)(ix), (s)(5)(ii)(A) and (6)(ii) revised; (f)(1)(ii), (g)(2)(ii), (iii), (8) and (r)(6) removed; (f)(1)(iii), (g)(2)(iv) through (xv), (9) through (12), (r)(7) and (8) redesignated as (f)(1)(ii), (g)(2)(ii), through (xiii), (8) through (11), (r)(6) and (7); (p)(1)(vi), (3)(i), (s)(5)(ii)(C) and appendix A amended; eff. 1–16–96 64312
Appendixes B and C amended; eff. 1–16–96 64314
1755.525 OMB number 1711
1755.860 OMB number 1711
1755.870 OMB number 1711
1755.890 OMB number 1711
1755.900 OMB number 1711
1767.13 (a), (c) introductory text and (d) revised 55429
1767.14 Revised (OMB number) 55429
1767.18 Amended 55429, 55430
1767.19 Amended 55430
1767.41 Amended 55430, 55435, 55436, 55437, 55438
1773.2 Correctly designated 2874
1785.1—1785.17 (Subpart A) Removed 3735

1996

7 CFR

61 FR Page

Chapter XVII
1703.100—1703.140 (Subpart D) Revised 33626
1703.104 (d) and (g) corrected 37961
1703.105 (a)(11) corrected 37961
1703.107 (a)(2) note correctly removed 37814, 42462
(e)(5), (g) and (j)(1) corrected 37961
1703.117 (e)(8) corrected 37814
(c)(1)(i), (v), (d)(1)(i), (2)(i)(C), (e)(2)(i) and (7) corrected 37961
1703.118 (a)(3) corrected 37814
1703.126 (b)(1) corrected 37961
1703.128 Corrected 37961
1703.140 Heading and (a)(2) corrected 37961
1703.100—1703.140 (Subpart D) Appendix A corrected 37961

7 CFR—Continued

61 FR Page

Chapter XVII—Continued
1710.109 (c) introductory text, (1), (2) and (3) redesignated as (c)(1) introductory text, (i), (ii) and (iii); new (c)(2) added; eff. 1–21–97 66870
1710.110 (a) amended; (c)(1)(iii) added; eff. 1–21–97 66870
1710.114 (b)(3) amended; eff. 1–21–97 66871
1710.119 (b)(3) revised; eff. 1–21–97 66871
1714.56 (c) introductory text revised; eff. 1–21–97 66871
1717.150—1717.161 (Subpart D) Added; eff. 1–21–97 66871
1755.98 Table amended 26074
1755.700 Added 26074
1755.701 Added 26074
1755.702 Added 26075
1755.703 Added 26076
1755.704 Added 26077
1770.26—1770.27 (Subpart C) Added 39847
1773.1 (c) revised; interim 107
1773.5 (c) revised; interim 107
1773.6 (a) revised; interim 108
1773.9 (a) and (b) revised; interim 108
1773.31 Revised; interim 108
1773.32 (a) revised; interim 108
1773.33 Revised; interim 108
1773.34 (d)(1), (2) and (3) removed; (e)(1)(iii), (2)(iii) and (g) revised; interim 108
1773 Appendix A amended; interim 109
Appendix B amended; interim 111
Appendix C revised; interim 113
1786.167 (a) amended; eff. 1–21–97 66874
1789 Added 48606

Chapter XVIII
Chapter XVIII Heading revised; nomenclature change 1109, 2899
1806 Authority citation revised 59777
Technical correction 63928
1806.1 (a) revised; interim 59777
1841 Removed 21362
1843 Removed 21362
1845 Removed 21362

1997

7 CFR

62 FR Page

Chapter XVI

1610.6 (d) added 46869
1610.11 (c) added 46869

Chapter XVII

Chapter XVII Policy statement 6449
1703.100—1703.140 (Subpart D) Revised 32437
1710 Effective date confirmation 18037
1710.7 (b)(3) revised 27930
1710.106 (e) revised; interim 7922
1710.113 (c) redesignated as (c)(1); (c)(2) added 7665
1717 Authority citation revised 50491
1717.1200—1717.1208 (Subpart Y) Added 50491
1735 Heading and authority citation revised 46869
1735.2 Amended 46869
1735.3 Amended 46870
1735.17 (c) revised 46870
1735.22 (f) revised; (g) redesignated as (i); new (g) and (h) added 46870
1735.31 (d) and (e) redesignated as (e) and (f); new (d) added 46870
1735.32 (b) amended; (c) revised 46870
1735.33 Added 46870
1735.43 Heading and (a) revised; (b) redesignated as (f); new (b) through (e) added 46871
1735.46 (b), (c) and (d) revised; (e) and (f) removed; (g) and (h) redesignated as (e) and (f) 46871
1735.60 (a) introductory text amended; (a)(3) removed 46871
1735.76 Amended 46871
1737 Heading and authority citation revised 46871
Heading correctly revised 49557
1737.70 (d) removed 46872

7 CFR—Continued

62 FR Page

Chapter XVII—Continued

1739 Removed 46872
1746 Removed 46872
1753.39 (c) revised 32477
1755.97 Table amended 23959
1755.98 Table amended 23959
1755.217 Added 7138
1755.400 Added 23960
1755.401 Added 23960
1755.402 Added 23960
1755.403 Added 23962
1755.404 Added 23989
Corrected 25017
1755.405 Added 23996
1755.406 Added 23998
1755.407 Added 24000
1767 Authority citation revised 42289
1767.13 (a) and (d) revised 42289
1767.17 (a) and (b) revised 42290
1767.21 Amended 42290
1767.27 Amended 42291
1767.28 Amended 42311
Corrected 43201
1767.29 Amended 42313
1767.30 Amended 42315
1767.31 Amended 42317
1767.41 Introductory text revised 42319
Amended 42320, 42321, 42323, 42330
1775 Redesignated from 1942.451—1942.500 (Subpart J) and revised 33469
1777 Redesignated from 4284.401—4284.500 (Subpart E) and revised 33473
1778 Redesignated from 1942.501—1942.550 (Subpart K) and revised 33475
1780 Added 33478
1781 Redesignated from 1942.401—1942.424 (Subpart I) and revised 33500
1786.75—1786.86 (Subpart D) Removed 32478

○